Trane

Engineering and Controls

A/C Clinic – Centrifugal Water Chillers
Applications Engineering Manual - Multiple Water Chiller Systems
Applications Engineering Manual – Refrigeration System Equipment Room Design
ANSI – Trane Wiring Systems
Applications Engineering Manual – Centravac Starters
Applications Engineering Manual – Control of Model CVHE Chillers w/ Black Classic Panel
Applications Engineering Manual - Control of Model CVHE w/Microprocessor Based Control
Applications Engineering Manual – CenTraVac Intergrated Comfort Systems
Applications Engineering Manual – Control of CVHE w/ UCP 695
Applications Engineering Manual – System Controller – SCP-699
Operators Guide – CVMA-OG-1B – SCP 699 System Control Panel
UCP 2 – A First Look (ST-MNL-4)
UCP 2 – The Operators Perspective (ST-MNL-5)
Clear Language Display – UPC 2 (CVHE –CLD 1A)

Installation, Operation and Maintenance

Operation and Maintenance – CVHE-M-4A – Black Classic Panel
Wiring – CVHE-W-1 – Black Classic Panel
Operation and Maintenance – CVHE-M-6 – UCP 695
Wiring – CVHE-W-3 – UCP 695
Installation – General Information – CVHE-IN-9C – UCP 2
Installation – General Information – CVHE-IN-10C – UCP 2
Installation – General Information – CVHE-IN-11C – UCP 2
Installation - General Information – CVHE-SVN01A-EN
Installation – Piping Information - CVHE-SVN02A-EN
Installation - Piping Information – CVHE-SVN02B-EN
Operation and Maintenance – CVHE-OM-8C – UCP 2
Operation and Maintenance – CVHE-SVU01-EN – CH 530
Wiring – CVHE-W-8A – UCP 2
Operation and Maintenance - CDHF-OM-1B – Duplex Centravac
Installation, Operation and Maintenance – Trane Adaptive Frequency Drive – AFDA-IOM-3
Operation and Maintenance – Trane Liquid Cooled Adaptive Frequency Drive – AFDB-OM-1C
Operation and Maintenance – Trane Purifier Purge – PRG-OM-6A
Purge System Operation – ST-MNL-3
Purge Service Bulletin – PRGA-SB-1 – Filter Drier Core and Smart Timer

Purge Service Bulletin – PRGA-SB-3 – Purifier Purge Restrictor Rework
Purge Service Bulletin – PRGC-SB-1 – Human Interface Software Retrofit
Purge Service Bulletin – PRGC-SB-2 – Unexplained Pumpout
Installation,Operation Maintenance -Trane Refrigerant Monitor - RMWD-IOM-1D
Trouble Shooting/Repair – Trane Refrigerant Monitor – RMWD-TSR1

Service on Black Classic Panel

Black Classic Controls - Solid State Overload
TLO-90 - Solid State Overload Tester
MPCA-IOM-1A- Installation, Operation and Maintenance CentraVac Motor Starter Protection System
Related Solid State Overload List – CTV-SB-22B, CTV-SB-65, CTV-SB-74, CTV-SB-75B, CTV-SB-76, CTV-SB-77, CVHE-SB-12A and CVHE-SB-15

Black Classic Controls – Capacity Control Module
Operation and Maintenance – Capacity Control Tester – TOL-91
Capacity Control Module Installation Instructions – MOD-0182
Wiring Legend for Black Classic Panel
Sequence of Operation for Typical Black Classic Panel
Wiring Diagram for Typical Black Classic Panel
CVHE Electric Vane Motor Data – Black Classic Panel

Service on UCP 695 Control Panel

Bubble and Flow Chart for UCP 695
Voltage Test Points for UCP 695
Sensor Chart for UCP 695
CentraVac Controls Handout for UCP 695 – Refer to CVHE-SB-22A for Complete Troubleshooting Guide in Tab 7

Service on UCP 2 Control Panel

Bubble Chart for UCP 2
PSIG Conversion Chart to PSIA or Hg
CentraVac Controls Handout for UCP 2 – Refer to CVHE-SB-32 and 32A For Complete Troubleshooting in Tab 7
UCP 2 Control Panel Conversion Package – CVRB-IN-2A
UCP 2 Control Panel Conversion Package Supplement – CVRB-SUPL-1
Trane Refrigerant Monitor Troubleshooting and Repair – RMWD-TSR-1

Service on CVHE/F Chillers

CTV-SG-2 – Compressor Disassembly A,B,C and D Design Sequence – Section 8.2
CVHE Teardown Inspection Report
CVHE/CVHF/CDHF/CDHG Compressor Component Weights
CVHE/CVHG Compressor Disassembly – CTVH-GCO-01-EN
CVHE/CVHG Compressor Assembly – CTVH-GCO-02-EN
CVHF Compressor Disassembly – CTVH-GCO-03-EN
CVHF Compressor Assembly – CTVH-GCO-04-EN
Basic Torque Values
TOL-89 Hole Designator for CVHE Volute Lifting Tool
CVHE Technical Clearances
DRV Motor Teardown Handout
Engineering Bulletin – CVHE/F/G Limited Access Installation – CTV-EB-83
Locktite O-Ring Sealant Instructions
Trane Engineered CentraVac Chiller Retrofit Installation – CTV-IN-1
CVHE/F Oil and Refrigerant Pump Information
CSS Standard and Mfg. Standing Vacuum Test Standards

Service Bulletins

AFDB-SVA001-EN – AFDB Variable Frequency Drive-Coolant System Inhibitor
AFDB-SVA0002-EN –1000HP AFDB Drives – Pressure Limit
AFDB-SVB02A-EN Frequency Drive Coolant Loop

CVHE-SB-9 CVHE/B Oil Heater Electrical Connections
CVHE-SB-10 Compressor Doweling
CVHE-SB 11 Compressor to Condenser O-ring Replacement
CVHE-SB-12A Surge Suppressors for Solid State Overload
CVHE-SB-15 Starter Fault Breaker/ K 10 Relay Race
CVHE-SB-16 UCP 695/SCP 699 Sensor Identification and Location
CVHE-SB-18 CVHE Vibration Analysis and Trim Balance Procedure
CVHE-SB-20A Oil pressure Loss During Start-up
CVHE-SB-21A Oiless (ITT) Purge Compressor
CVHE-SB-22A UCP 695 Troubleshooting
CVHE-SB-23 CNT-1091 Surge Arrestors
CVHE-SB-24 Vane Actuator Replacement Kit (Black Classic Panel)
CVHE-SB-25 5000 Frame Low Voltage Motor Cooling
CVHE-SB-26 CVHE Oil Loss
CVHE-SB-27 UCP 695 Free Cooling Relay Malfunction
CVHE-SB-28 Vent Line Solenoid Malfunction
CVHE-SB-29 DRV5-1740 Louis Allis Replacement Motors CVHE035-050
CVHE-CSB-31 Starter Line Side Fuses – CVHE/CVHF UCP

CVHE-SB-32 UCP 2 Troubleshooting (Old Bulletin) 200-575 Volt Units- Fix-On-Fail
CVHE-SB-32A UCP 2 Troubleshooting (Supersedes CVHE-SB-32)
CVHE-SB-33A Installation Procedures for CVHE/F Thrust Bearings
CVHE-SB-36 Across the Line Starters
CVHE-SB-37 Water-Cooled Hermetic CenTraVac
CVHE-SB-39 Lubrication of First Stage O-rings
CVHE-SB-41 Rupture Disc Installation Procedure
CVHE-SB-42 Software Change to Upgrade the Lubrication Protection System.
CVHE-SB-43 Motor Terminal Box Sweating
CVHE-SB-44 Solid State Starter Logic Module Failure (2U2) UCP 2
CVHE-SB-45C GPM/Tonnage Option Used on CVHE/F/G Units – Revision
CVHE-SB-46A Fast Restart Situation for UCP2 Equipped Centrifugal Chillers
CVHE-SB-47 UCP 2 Chiller Extended Storage
CVHE-SB-48A New Shipping Container for R-123
CVHE-SB-48C Returnable Containers for R-123
CVHE-SB-49 General Guidelines for Oil Analysis and Oil Change
CVHE-SB-50 New Oil Regulator Block Assembly
CVHE-SB-52A Solid State Starter (Inside the Delta) Service Manual
CVHE-SB-53 AFDB Water Cooled Inverter Drive Settings
CVHE-SB-54 3KVA Transformer in Low Voltage Starters
CVHE-SB-99 Frequency Drive Start-up Procedure Form
CVHE-SVB-001-EN – Cutler-Hammer Starters
CVHE-SVB-02A-EN –Sticking 1K5 Oil Refrigerant Pump Motor Relays
CVHE-SVB-04C-EN - Intelligent Technology for Solid State Starter
CVHE-SVB-06A-EN - Unit Mount – Medium Voltage Starters
CVHE-SVA-07A-EN –Service Alert- CenTraVac Thrust Bearing Alignment Mark Removal
CVHE-SVB-09A-EN- CH530 Software
CVHE-SVB-10A-EN – Rockwell Water Cooled AFDD
CVHF-SB-1 CVHF Economizer Mandatory Retrofit
CVHF-SB-3A CVHF/G Circuit Module Chip
CTV-SB-19D Recommendations For: Oil Analysis
CTV-SB-22B CentraVac Solid State Motor Protection Module
CTV-SB-48A Open Rotor Testing
CTV-SB-60F Refrigerant Charges
CTV-SB-61B Motor Resistance Testing
CTV-SB-65 Centravac Solid State Overload Nuisance Tripout
CTV-SB-66F O-ring Lubricant and Sealant
CTV-SB-67 Motor Current Imbalance
CTV-SB-74 Installation of the Distribution Fault Automatic Reset Option
CTV-SB-75B Cutler-Hammer Solid State Overload Upgrade
CTV-SB-76 Nuisance "Distribution Fault" Trips Following Unit Shutdown
CTV-SB-77 SSOL Operation and Calibration
CTV-SB-79A CentraVac Conversions and Reselections
CTV-SB-82D HCFC-123 for Centrifugal Chillers

CTV-SB-83 Voltage Surge Arrestors
CTV-SB-85 Solid State Load Limit Control CNT 1064 and Current Transformer Mismatch
CTV-SB-88 2K5B Relay Fail Safe Circuit Kit for UCP 695
CTV-SB-89 Handling and Shipping Refrigerant Samples
CTV-SB-90 CVHE/CVHF UCP2 Module Update
CTV-SB-91A HCFC-123 Engineered Conversion Requirements
CTV-SB-92 CVHE/CVHF UCP2 Phase C Module Update
CTV-SB-97 Redesign Lubrication System for CVHE/F/G
CTV-SB-99 Color Marking on O-rings and Gasket Material
Part-IN-135B Replacement of Relay –RLY00765 with KIT07406
CTV-SVB05A-EN CH 530 LLID Failures
CTV-SVB11C-EN Thrust Bearing Oil Feed Orifice Size Change
CTV-SVB17C-EN Re-torque of Flat Gaskets
CTV-SVB19C-EN Thrust Bearing Race Retention
CTV-SVB29A-EN Vibration Analysis for CVHE/CVHF and CVHG

Tech Notes

Black Classic Panel
UCP-1 1985-1994
Balance Nuts CVHE Chillers
CVHE Tech Notes

TRANE®

Air Conditioning Clinic

Centrifugal Water Chillers

One of the Equipment Series

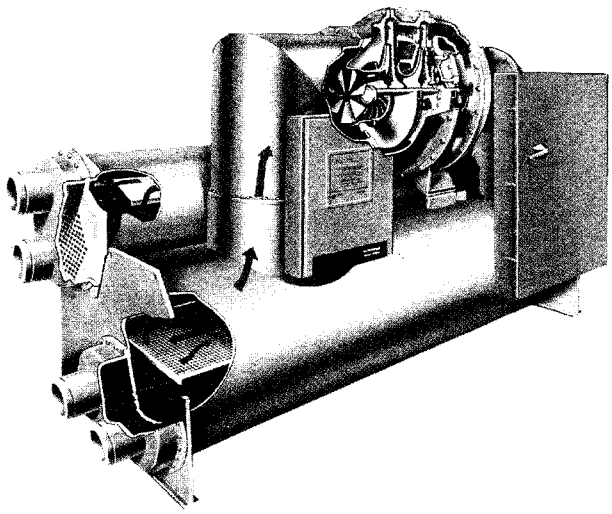

TRG-TRC010-EN



Centrifugal Water Chillers

One of the Equipment Series

A publication of
The Trane Company—
Worldwide Applied Systems Group

Preface

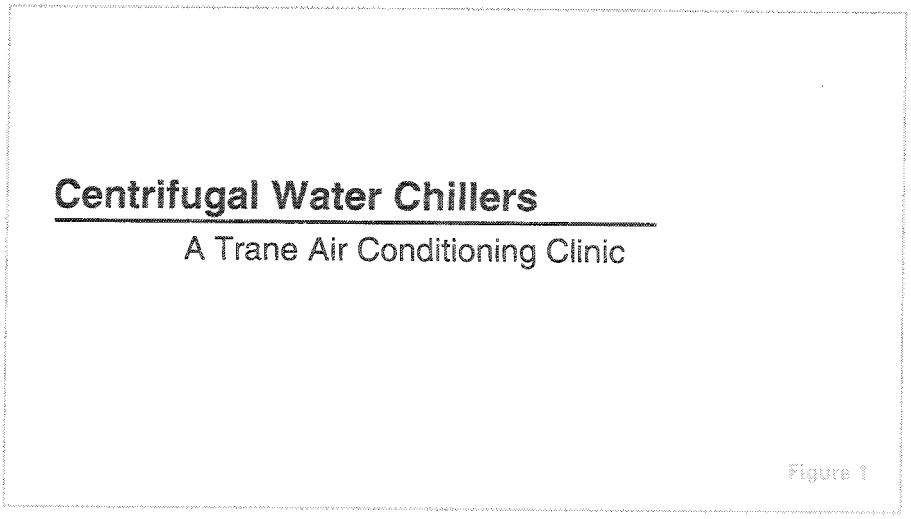

Figure 1

The Trane Company believes that it is incumbent on manufacturers to serve the industry by regularly disseminating information gathered through laboratory research, testing programs, and field experience.

The Trane Air Conditioning Clinic series is one means of knowledge sharing. It's intended to acquaint a nontechnical audience with various fundamental aspects of heating, ventilating, and air conditioning.

We've taken special care to make the clinic as uncommercial and straightforward as possible. Illustrations of Trane products only appear in cases where they help convey the message contained in the accompanying text.

This particular clinic introduces the concept of **centrifugal water chillers**.

© 1999 American Standard Inc. All rights reserved

Contents

Introduction 1

period one **Components** 3

- Compressor 4
- Condenser 7
- Expansion Device 8
- Economizer 9
- Evaporator 11
- Motor 12
- Controls and Starter 13

period two **Refrigeration Cycle** 15

- Refrigerants 19
- Purge System 20

period three **Compressor Capacity Control** 22

period four **Maintenance Considerations** 30

period five **Application Considerations** 36

- Condensing Temperature Control 37
- Constant or Variable Evaporator Water Flow 39
- Short Evaporator-Water Loops 40
- Heat Recovery 42
- Free Cooling 44
- Equipment Certification Standards 46

period six **Review** 48

Quiz 52

Answers 54

Glossary 55

Introduction

notes

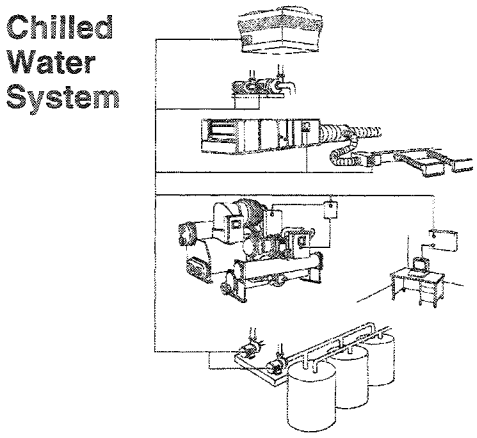

Figure 2

Water chillers are used in a variety of air conditioning and process cooling applications. They are used to make cold water that can be transported throughout a facility using pumps and pipes. This cold water can be passed through the tubes of coils to cool the air in an air conditioning application, or it can provide cooling for a manufacturing or industrial process.

Systems that employ water chillers are commonly called **chilled water systems**.

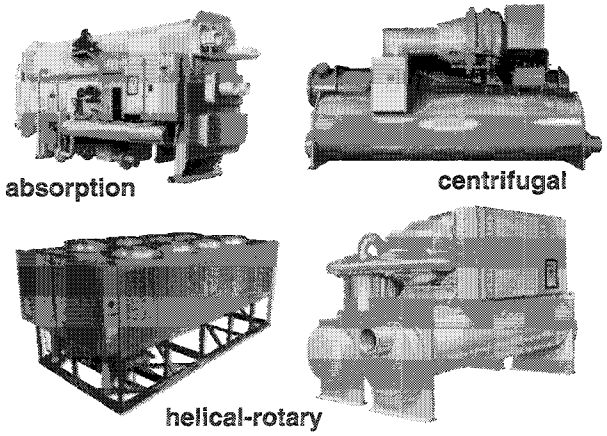

Figure 3

There are several types of water chillers. They differ from each other based on the refrigeration cycle or the type of compressor they use.

Absorption water chillers make use of the absorption refrigeration cycle and do not have a mechanical compressor involved in the refrigeration cycle.

Introduction

notes

Water chillers using the vapor-compression refrigeration cycle vary by the type of compressor used. Reciprocating and scroll compressors are typically used in small chillers. Helical-rotary (or screw) compressors are typically used in medium-sized chillers. Centrifugal compressors are typically used in large chillers.

As mentioned earlier, this particular clinic discusses **centrifugal water chillers**.

Centrifugal Water Chillers

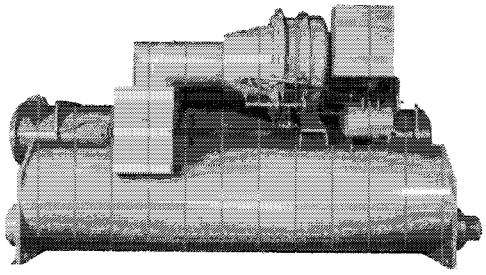

Figure 4

Centrifugal water chillers can also be divided into two types based on the method used to reject heat to the atmosphere: water-cooled or air-cooled. Since most centrifugal chillers are water-cooled, they are the primary focus of this clinic. Water-cooled centrifugal chillers are generally available from 100 to 3,000 tons [350 to 10,500 kW] as prefabricated machines, and up to 8,500 tons [30,000 kW] as built-up machines.

notes

Centrifugal Water Chillers

period one
Components

Figure 5

Many of the components of the centrifugal water chiller are similar to those of other chiller types.

components of a
Centrifugal Water Chiller

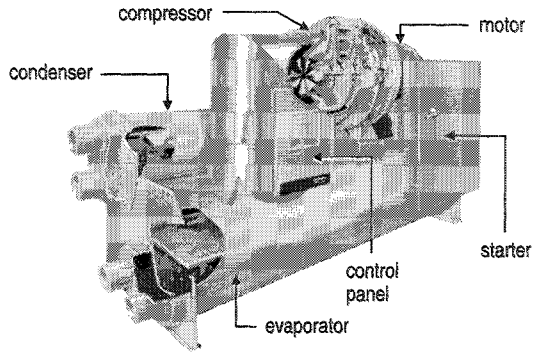

Figure 6

This particular centrifugal water chiller makes use of a shell-and-tube evaporator where refrigerant absorbs heat from the water flowing through the tubes. The compressor is made up of 1 or more centrifugal impellers. A second shell-and-tube heat exchanger serves as the water-cooled condenser, where refrigerant is condensed inside the shell and water flows inside tubes. Refrigerant is metered through the system using an expansion device such as a fixed orifice plate. An economizer can be used to enhance the efficiency of a chiller with multiple compressor impellers. A control panel is also provided on the chiller and a starter is either mounted on the chiller or located remotely.

period one
Components

notes

Compressor

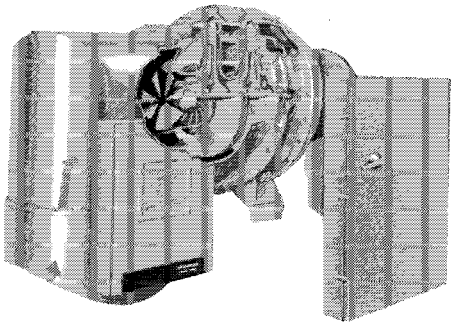

Figure 7

Compressor
The centrifugal compressor uses the principle of **dynamic compression**, which involves converting energy from one form to another, to increase the pressure and temperature of the refrigerant. It converts kinetic energy to static energy.

Impeller

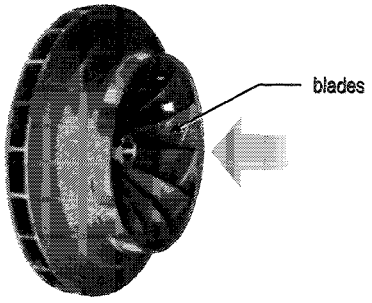

Figure 8

The core component of a centrifugal compressor is the rotating **impeller**. The center, or eye, of the impeller is fitted with blades that draw refrigerant vapor into radial passages that are internal to the impeller body.

period one
Components

notes

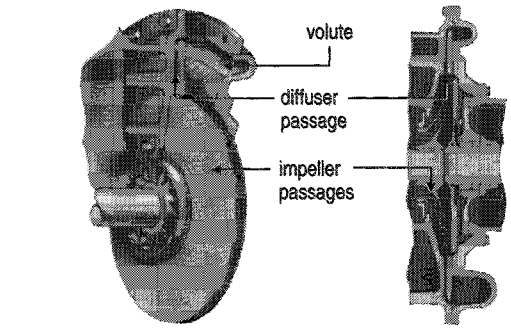

Figure 1

The rotation of the impeller causes the refrigerant vapor to accelerate within the **impeller passages**, increasing its velocity and kinetic energy.

The accelerated refrigerant vapor leaves the impeller and enters the **diffuser passages**. These passages start out small and become larger as the refrigerant travels through them. As the size of the diffuser passages increases, the velocity, and therefore the kinetic energy, of the refrigerant decreases.

The first law of thermodynamics states that energy is not destroyed—only converted from one form to another. Thus, the refrigerant's kinetic energy is converted to static energy or static pressure.

Refrigerant, now at a higher pressure, collects in a larger space around the perimeter of the compressor called the **volute**. The volute also becomes larger as the refrigerant travels through it. Again, as the size of the volute increases, the kinetic energy is converted to static pressure.

Due to its pressure and temperature, the refrigerant leaving the compressor is in a condition that allows its heat to be rejected from the chiller.

notes

centrifugal compressor
Energy Conversion

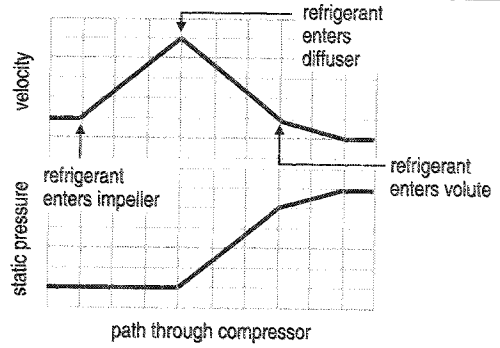

Figure 10

Again, in the passages of the rotating impeller, the refrigerant vapor accelerates, increasing its velocity and kinetic energy. As the area increases in the diffuser passages, the velocity, and therefore the kinetic energy, of the refrigerant decreases. This reduction in kinetic energy is offset by an increase in the refrigerant's static energy or static pressure. Finally, the high pressure refrigerant collects in the volute around the perimeter of the compressor, where further energy conversion takes place.

The resulting pressure and temperature of the refrigerant is now high enough that its heat can be rejected from the chiller.

Multistage Compressor

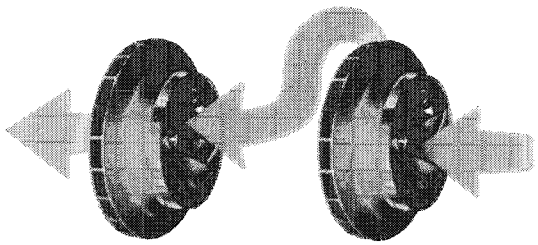

Figure 11

Centrifugal compressors use 1 or more impellers to compress the refrigerant. A **multistage compressor** uses 2 or 3 impellers to increase the pressure of the refrigerant in steps instead of performing the task within a single impeller. Compressed refrigerant vapor travels from the outlet of the first-stage compressor impeller to the inlet of the second-stage compressor impeller. After

notes

the accelerated refrigerant vapor leaves the last impeller, it collects in the compressor volute and travels on to the condenser.

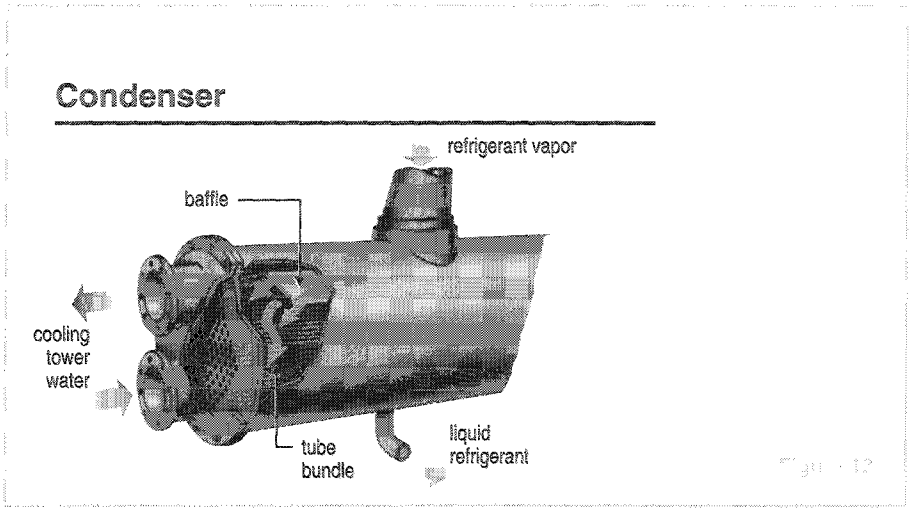

Condenser

The high-pressure refrigerant vapor is discharged from the compressor into a heat exchanger that acts as a condenser.

In a water-cooled **condenser**, water is pumped through the tubes of the shell-and-tube heat exchanger while refrigerant vapor fills the shell space surrounding the tube bundle. A baffle inside the condenser helps distribute the refrigerant evenly. As heat transfers from the hot, high-pressure refrigerant vapor to the water, refrigerant condenses on the tube surfaces.

Cooling water flows first through the lower tubes and then through the upper tubes. This produces a nearly constant temperature difference between the downward-moving refrigerant and the tube surfaces, resulting in a uniform heat transfer rate within the tube bundle.

Condensed liquid refrigerant collects in the bottom of the shell and flows through the liquid line to the expansion devices and economizer.

period one
Components

notes

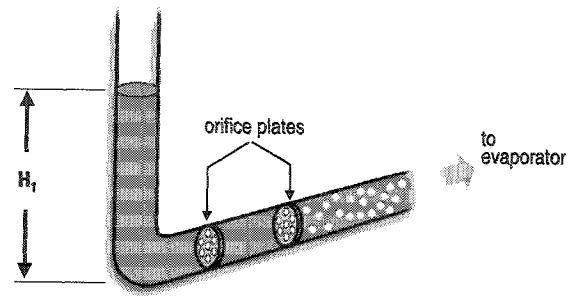

Figure 13

Expansion Device

An **expansion device** is used to maintain the pressure difference between the high-pressure (condenser) and low-pressure (evaporator) sides of the refrigeration system, as established by the compressor. This pressure difference allows the evaporator temperature to be low enough for the refrigerant to absorb heat from the water being cooled, and the condenser temperature to be high enough for the refrigerant to reject heat to water at normally available temperatures. High-pressure liquid refrigerant flows through the expansion device, causing a pressure drop that reduces the refrigerant pressure to that of the evaporator. This pressure reduction causes a small portion of the liquid to boil off, or "flash," cooling the remaining refrigerant to the evaporator temperature.

The expansion device is also used as a liquid refrigerant metering system, balancing the refrigerant flow rate with the evaporator load condition. In our example centrifugal chiller, the expansion device used is a set of 2 **orifice plates**. At full load, a large amount of refrigerant is moving through the chiller. The column of liquid refrigerant in the liquid line pressurizes the liquid at its base. During passage through the orifice plates, the liquid refrigerant undergoes a pressure drop equal to the head **(H_1)** before some of it flashes to vapor.

notes

expansion device
Orifice Plates

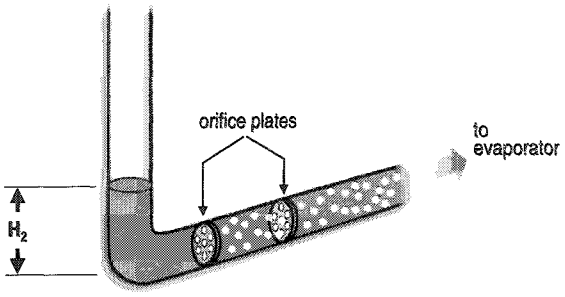

Figure 14

As the load decreases, less refrigerant moves through the chiller and the level of the liquid column drops. Now, as the liquid refrigerant passes through the orifice plates, it only undergoes a pressure drop equal to the lower head **(H_2)** before some of it flashes to vapor. This causes additional flashing at the orifice plate which, in turn, feeds less liquid to the evaporator.

Other types of expansion devices found in centrifugal chillers include: float valves, expansion valves (thermostatic or electronic), and variable orifices.

2-stage chiller
Economizer

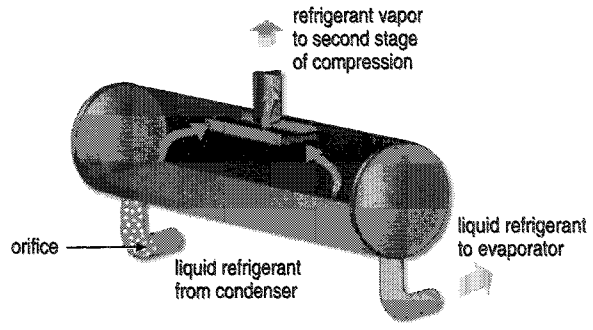

Figure 15

Economizer

An **economizer** can be used in conjunction with multiple expansion devices to improve the efficiency of a multistage chiller. In a chiller with a 2-stage compressor, the expansion process can be separated into 2 steps with an economizer chamber between.

period one
Components

notes

Liquid refrigerant from the condenser enters the first expansion device, which reduces the pressure of the refrigerant to that of the second-stage impeller inlet. This pressure drop causes a portion of the liquid refrigerant to evaporate, or flash, and the resulting mixture of liquid and vapor enters the economizer chamber. Here, the vapor is separated from the mixture and is routed directly to the inlet of the second stage impeller. The remaining liquid travels on to the second expansion device and evaporator.

Just before entering the evaporator, the liquid refrigerant flows through a second expansion device that reduces its pressure and temperature to evaporator conditions.

Flashing a portion of the refrigerant prior to the economizer reduces the amount of compressor power required, since the refrigerant vapor generated in the economizer only needs to be compressed by the second-stage impeller.

The benefit of the economizer will be discussed in greater detail in Period 2.

3-stage chiller
Economizer

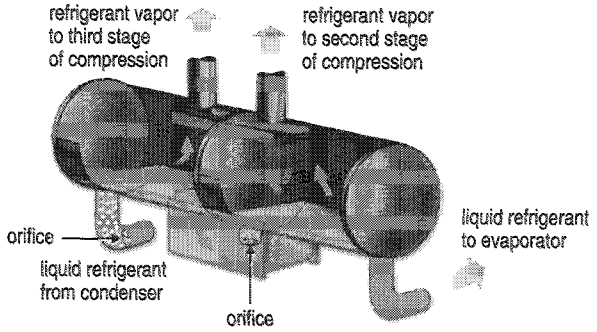

Figure 16

In a chiller with a 3-stage compressor, the expansion process can be separated into 3 steps with separate economizer chambers between the steps.

Liquid refrigerant from the condenser enters the first orifice (expansion device), which reduces the pressure of the refrigerant to that of the third-stage impeller inlet. This pressure drop causes a portion of the liquid refrigerant to flash, and the resulting mixture of liquid and vapor enters the high-pressure chamber of the economizer. Here, the vapor is separated from the mixture and is then routed directly to the inlet of the third-stage impeller. The remaining liquid travels on to the second expansion device.

The second expansion device further reduces the pressure of the refrigerant to that of the second-stage impeller inlet. This pressure drop causes a portion of the liquid refrigerant to flash, and the resulting mixture of liquid and vapor enters the low-pressure chamber of the economizer. Here, the vapor is separated from the mixture and routed directly to the inlet of the second-stage impeller. The remaining liquid travels on to the third expansion device and evaporator.

notes

Again, the final expansion device reduces the pressure and temperature of the refrigerant to evaporator conditions.

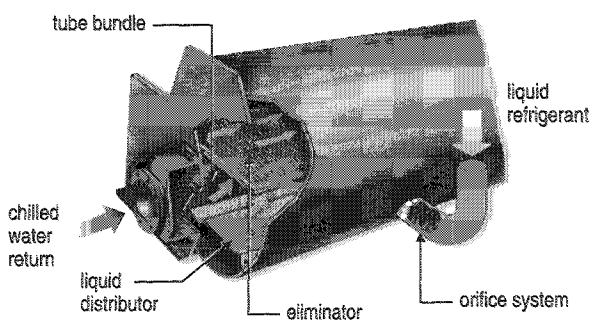

Figure 17

Evaporator

In the **flooded shell-and-tube evaporator** shown, the low-pressure mixture of liquid refrigerant and refrigerant vapor enters the distribution system that runs the entire length of the shell. Small openings and baffles in the passage of the liquid distributor provide an even spray of refrigerant over the surfaces of the tubes inside the evaporator shell, where the refrigerant absorbs heat from relatively warm water flowing through the tube bundle. This transfer of heat boils the liquid refrigerant on the tube surfaces. The resulting vapor passes through an eliminator that prevents liquid from being drawn upward. The vapor collects in a large chamber at the top of the shell and is drawn back to the compressor. The now-cool water can be used in a variety of comfort or process applications.

Some chiller designs may make use of a **direct expansion (DX) shell-and-tube evaporator**. In this type of evaporator, liquid refrigerant flows through the tubes and water fills the surrounding shell. As heat is transferred from the water to the refrigerant, the refrigerant boils inside the tubes and the resulting vapor is drawn to the compressor.

notes

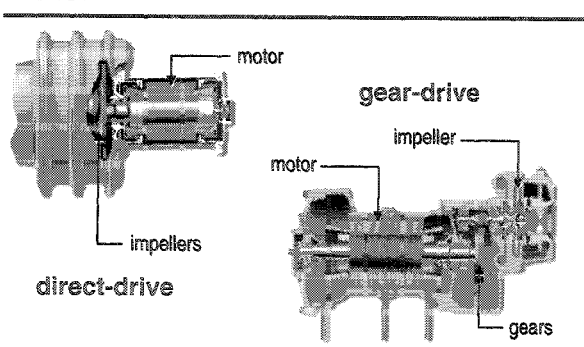

Figure 18

Motor

A motor is used to rotate the impeller(s). A **direct-drive motor** is connected directly to the impeller shaft and the impeller rotates at the same speed as the motor. A **gear-drive motor** transfers its energy to the impeller shaft using a set of gears. This allows the impeller to rotate at a higher speed than the motor.

The direct-drive motor requires fewer bearings and does not incur gear losses. Additionally, since the compressor rotates at a lower speed, it can be much quieter.

Direct-drive compressors are, however, only practical in centrifugal chillers that use low-pressure refrigerants.

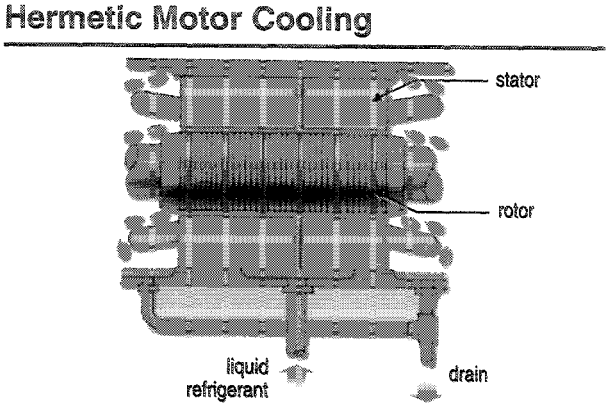

Figure 19

Another important difference in compressor motors is the issue of hermetic versus open. A **hermetic motor** is totally enclosed within the chiller's refrigeration system. An **open motor** is mounted externally—outside of the

notes

chiller's refrigeration system—and uses a coupling to connect the motor and compressor shafts.

The heat generated by the hermetic motor is absorbed by liquid refrigerant that flows around, through, and over the motor. The heat must be rejected by the chiller's condenser.

The heat generated by the open motor is rejected to the air drawn in from the equipment room. This heat must still be rejected from the equipment room, either by mechanical ventilation or, if the room is conditioned, the building's cooling system. In some designs, this air is simply drawn into the motor housing by the rotating motor shaft. The vent passages tend to get dirty and clog, resulting in higher operating temperatures and hot spots that adversely affect motor efficiency and reliability. Other designs, such as totally-enclosed fan-cooled (TEFC) and totally-enclosed air-over (TEAO), use a separate fan with a protective housing to cool the motor.

Hermetic compressor motors eliminate the need for the shaft couplings and external shaft seals that are associated with open motors. The coupling needs precise alignment, and these seals are a prime source of oil and refrigerant leaks. On the other hand, if a motor burns out, a hermetic chiller will require thorough cleaning, while a chiller with an open motor will not.

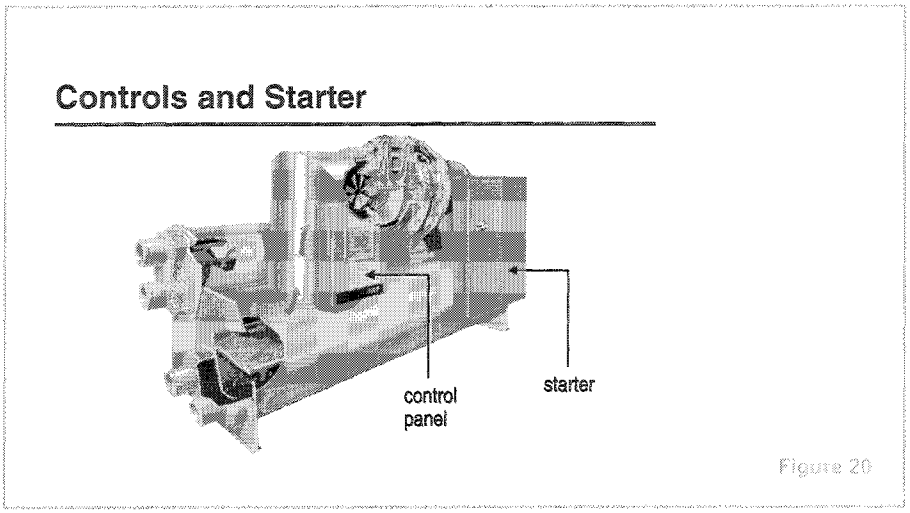

Figure 20

Controls and Starter

A microprocessor-based **control panel** is provided on the chiller to provide accurate chilled-water control as well as monitoring, protection, and adaptive limit functions. These controls monitor chiller operation and prevent the chiller from operating outside its limits. They can compensate for unusual operating conditions, keeping the chiller running by modulating system components rather than simply shutting it down when a safety setting is violated. When serious problems occur, diagnostic messages aid troubleshooting.

Modern control systems not only provide accurate, optimized control and protection for the chiller, but can also interface with a building automation system for integrated system control. In a chilled water system, optimal

notes

performance is a system-wide issue, not just a matter of chiller design and control.

A **starter** links the chiller motor and the electrical distribution system. Its primary function is to connect (start) and disconnect (stop) the chiller from line power—similar to what a switch does for a light bulb. The starter, however, handles much more current and must have the appropriate interlocks to work with the chiller control panel and oil pump.

Every electrically driven chiller requires a starter. It must be compatible with the characteristics of both the compressor motor and the electrical circuitry of the chiller. There are many types of starters, including star-delta, across-the-line, auto-transformer, primary reactor, and solid state. A variable-speed drive, which is used to modulate the speed of the motor during normal operation, also serves as a starter. Important characteristics to consider when selecting a starter include first cost, reliability, line voltage, and available current.

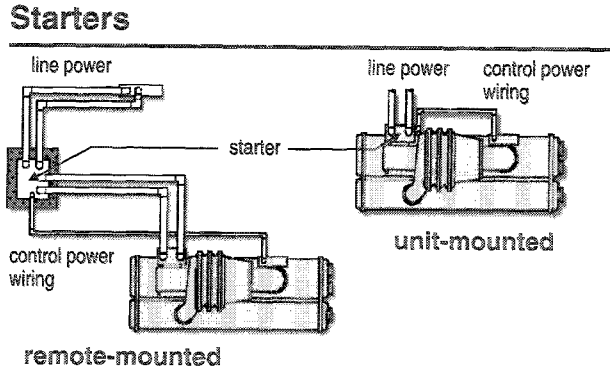

Figure 27

The starter may be mounted on, or remotely from, the chiller. Use of a unit-mounted starter reduces electrical installation costs. It may also improve reliability and save system design time, since all of the components are pre-engineered and factory mounted.

Depending on the type of starter selected, there are several options that can simplify installation. Disconnects allow the starter to be isolated from the electrical distribution system, and short-circuit protection can be provided using fuses or a circuit breaker.

notes

Centrifugal Water Chillers

period two
Refrigeration Cycle

A pressure–enthalpy (*p-h*) chart illustrates the refrigeration cycle of the centrifugal water chiller.

2-stage centrifugal chiller
Refrigeration Cycle

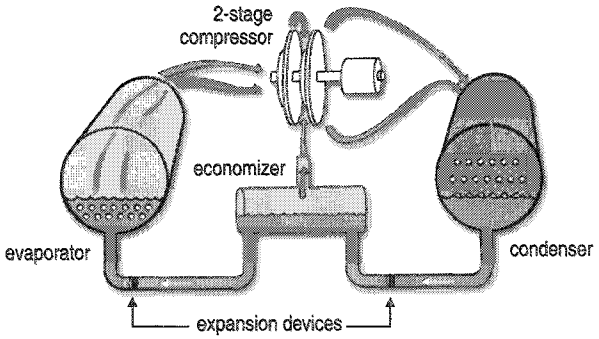

First, let's review the components of a 2-stage centrifugal chiller in the context of the refrigeration cycle.

Refrigerant vapor leaves the evaporator and flows to the compressor, where it is compressed to a higher pressure and temperature. High-pressure refrigerant vapor then travels to the condenser where it rejects heat to water, and then leaves as a saturated liquid. The pressure drop created by the first expansion device causes part of the liquid refrigerant to evaporate and the resulting mixture of liquid and vapor enters the economizer. Here, the vapor is separated from the mixture and routed directly to the inlet of the second-stage impeller. The remaining saturated liquid refrigerant enters the second expansion device.

period two
Refrigeration Cycle

notes

The pressure drop created by the second expansion device lowers the pressure and temperature of the refrigerant to evaporator conditions, causing a portion of the liquid refrigerant to evaporate. The resulting mixture of liquid and vapor enters the evaporator. In the evaporator, the liquid refrigerant boils as it absorbs heat from water and the resulting vapor is drawn back to the compressor to repeat the cycle.

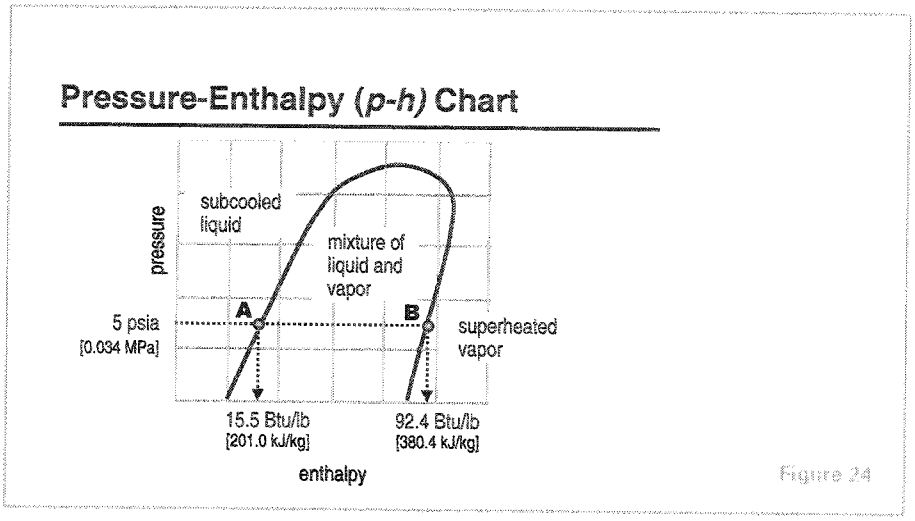

Figure 24

The **pressure-enthalpy chart** plots the properties of a refrigerant—refrigerant pressure (vertical axis) versus enthalpy (horizontal axis). **Enthalpy** is a measure of the heat content, both sensible and latent, per pound [kg] of refrigerant.

For example, **A** represents the heat content of saturated *liquid* HCFC-123 refrigerant at 5 psia [0.034 MPa] and 34°F [1.1°C]. **B** represents the heat content of saturated *vapor* HCFC-123 refrigerant at the same pressure and temperature. The difference in heat content, or enthalpy, between **A** and **B**—that is, 76.9 Btu/pound [179.4 kJ/kg]—is the amount of heat required to transform 1 pound of saturated liquid refrigerant to saturated refrigerant vapor at the same pressure and temperature.

If the heat content of the refrigerant at any pressure falls to the right of the curve, the vapor is superheated. Similarly, if the heat content of the refrigerant falls to the left of the curve, the liquid is subcooled. Finally, when the heat content of the refrigerant falls inside the curve, the refrigerant exists as a mixture of liquid and vapor.

Let's plot the theoretical vapor-compression refrigeration cycle for a 2-stage centrifugal water chiller on a pressure-enthalpy chart.

period two
Refrigeration Cycle

notes

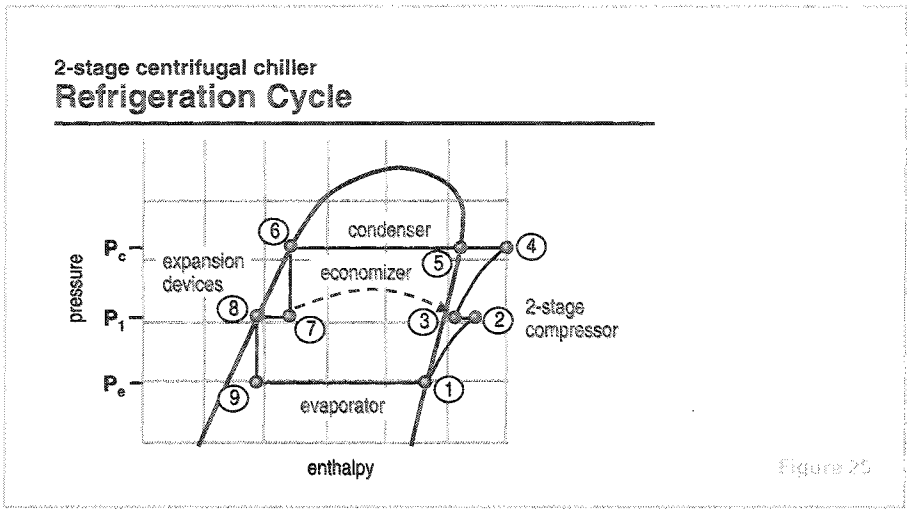

Refrigerant leaves the evaporator as saturated vapor ① and flows to the first-stage impeller of the compressor. There, the refrigerant vapor is compressed to a higher pressure **(P_1)** and temperature ②. Cooler refrigerant vapor that flashed within the economizer is mixed with the refrigerant discharged from the first-stage impeller, reducing the heat content of the mixture ③. The second stage of compression further elevates the pressure **(P_c)** and temperature of the refrigerant ④.

Energy provided to the compressor is imparted to the refrigerant as an increase in pressure and superheat. Superheated refrigerant vapor leaves the compressor and enters the condenser.

Water flowing through the condenser absorbs heat from the hot, high-pressure refrigerant vapor, causing it to desuperheat ⑤ and condense into saturated liquid ⑥ before leaving the condenser to travel to the first expansion device.

The first expansion device reduces the pressure (⑥ to ⑦) of the refrigerant to the second-stage impeller inlet pressure **(P_1)**. This pressure drop causes a portion of the liquid refrigerant to evaporate, or flash. The evaporating refrigerant absorbs heat from the remaining liquid refrigerant, reducing its enthalpy from ⑦ to ⑧. The resulting mixture of liquid and vapor enters the economizer ⑦. Here, the vapor is separated from the mixture and routed directly to the second-stage impeller inlet ③ and the remaining liquid travels on to the second expansion device ⑧.

Just before it enters the evaporator, the liquid refrigerant flows through a second expansion device that reduces its pressure **(P_e)** and temperature to evaporator conditions ⑨. The cool, low-pressure mixture of liquid and vapor enters the distribution system in the evaporator shell and absorbs heat from water that flows through the tubes. This transfer of heat boils the liquid refrigerant, and the resulting saturated refrigerant vapor is drawn back to the compressor ① to repeat the cycle.

period two
Refrigeration Cycle

notes

2-stage centrifugal chiller
Refrigeration Cycle

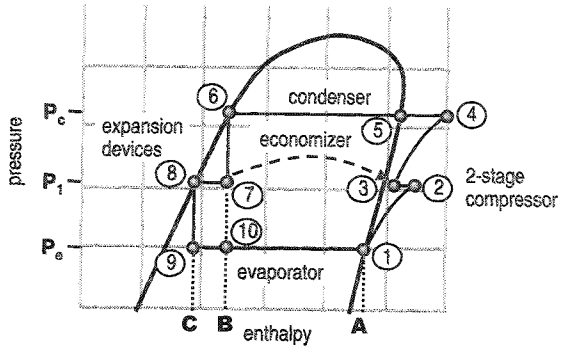

Figure 26

The change in enthalpy from **C** to **A** that occurs during the refrigeration cycle is called the **refrigeration effect**. This is the amount of heat that each pound [kg] of liquid refrigerant will absorb when it evaporates.

The benefit of the economizer can be demonstrated by comparing the refrigeration cycles with and without an economizer.

Without an economizer, refrigerant from the condenser ⑥ expands directly to evaporator conditions ⑩, producing a smaller refrigeration effect (**B** to **A**). Some chiller designs may subcool the liquid refrigerant in the condenser (⑥ moves to the left) to increase this refrigeration effect.

Also, in a chiller without an economizer, all of the refrigerant vapor must go through both stages of compression to return to condensing conditions. In a chiller with an economizer, refrigerant vapor that flashes in the economizer bypasses the first stage of compression, resulting in an overall energy savings of 3 to 4 percent.

period two
Refrigeration Cycle

notes

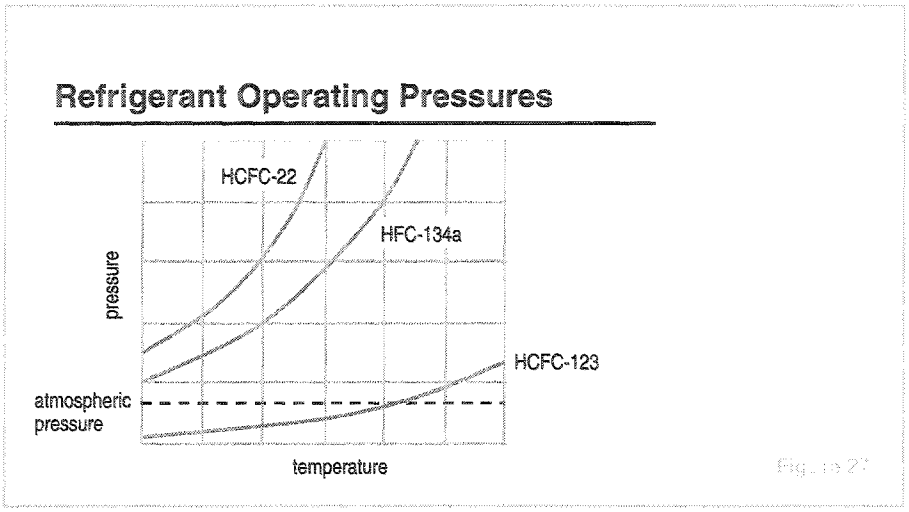

Refrigerants

When selecting which refrigerant to use in a centrifugal water-chiller, the manufacturer considers efficiency, operating pressures, compatibility with materials, heat transfer properties, stability, toxicity, flammability, cost, availability, and environmental impact.

Refrigerants commonly used in centrifugal chillers can be classified as low, medium, or high pressure based on the normal operating pressures in the refrigeration cycle.

Chillers using a high-pressure refrigerant like HCFC-22, or a medium-pressure refrigerant like HFC-134a, operate at pressures that are well above atmospheric pressure. As we are about to see, some sections of chillers that use a low-pressure refrigerant such as HCFC-123 operate at below-atmospheric pressure.

period two
Refrigeration Cycle

notes

Low-Pressure Chillers

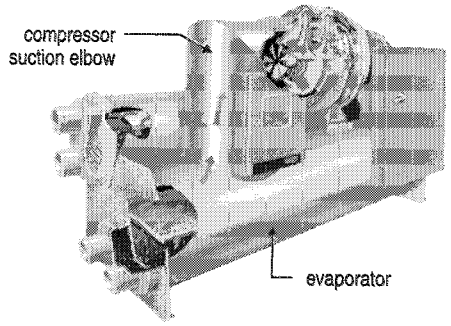

Figure 28

In chillers designed to use a low-pressure refrigerant, the evaporator and the piping leading to the suction side of the compressor operate at pressures that are lower than atmospheric pressure. Therefore, if small leaks exist in either of these sections, air will leak into the chiller instead of refrigerant leaking out.

Air inside a chiller reduces the surface area available for heat transfer. It also increases the refrigerant pressure in the condenser, which increases the pressure difference required across the compressor and causes more power to be consumed. In extreme cases, air can cause the compressor to surge, limiting the chiller's ability to produce cold water. Finally, infiltration of moist air can cause corrosion and other harmful chemical reactions inside the chiller.

Purge System

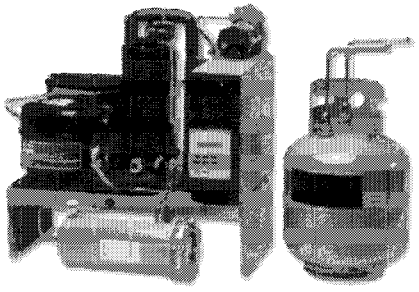

Figure 29

Purge System

Low-pressure chillers typically include a **purge system** to remove air and moisture that may leak in, while minimizing the emission of refrigerant.

Refrigeration Cycle

notes

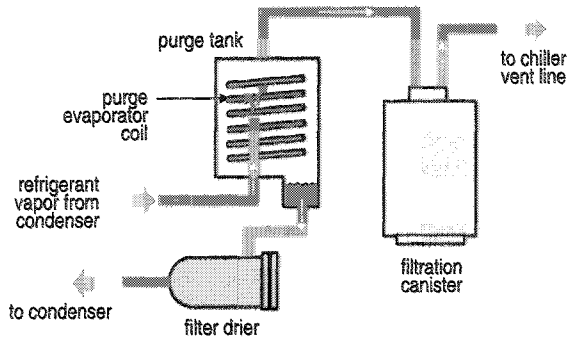

Figure 30

The purge consists of a small refrigeration system, a pump-out system, controls, and a filter drier. The purge's refrigeration system includes a small compressor, a finned-tube air-cooled condensing coil, an expansion valve, and an evaporator coil inside of the purge tank.

The tank with the evaporator coil separates condensable refrigerant from noncondensable air. Because the purge evaporator operates at a lower temperature and pressure than the chiller condenser, a mixture of refrigerant vapor and air is drawn from the chiller condenser, just above the level of the liquid refrigerant. (This is where air typically concentrates in a low-pressure chiller.) The mixture enters the purge tank, and the refrigerant condenses on the cold evaporator tubes and returns to the chiller condenser as liquid. The air does not condense but instead accumulates in the top of the tank. Eventually, enough air accumulates to cover a large portion of the coil. The air insulates the coil, reducing the amount of heat transferred and the temperature of the refrigerant leaving the purge evaporator coil. This temperature is called the purge suction temperature. The drop in purge suction temperature signals the need for a pump-out sequence.

When the purge suction temperature drops below the set point, a controller turns on the pump-out compressor and opens the isolation valves. Since the air contains a very small amount of refrigerant, it is pumped from the purge tank into a filtration canister. This canister adsorbs nearly all of the remaining refrigerant, and the air is then piped to the chiller vent line. When the purge suction temperature rises again, the controls close the valves and turn off the pump-out compressor.

A filter drier is located in the refrigerant drain line, between the purge tank and the chiller condenser. The filter drier removes moisture, acid, and dirt from the liquid refrigerant before it returns to the condenser.

The purge controls can also be used to track and record how often pump-out occurs. Leaks can be detected early by comparing pump-out activity over the last 24 hours to the 30-day average.

notes

Centrifugal Water Chillers

period three
Compressor Capacity Control

Figure 31

The capacity of most centrifugal compressors is controlled by vanes at the inlet of the compressor impeller.

While a survey of other centrifugal compressor designs shows that there are various methods of capacity control, many of them function in a manner similar to the inlet vanes presented in this period.

Inlet Vanes

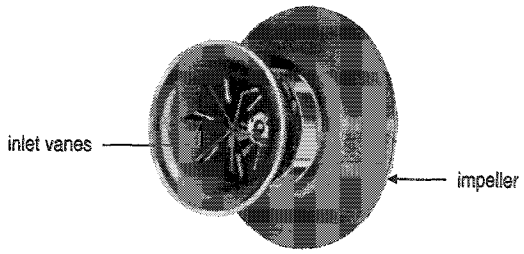

Figure 32

Inlet vanes, installed ahead of the impeller, are a common method of modulating the capacity of the compressor over a wide range of load conditions (refrigerant flow rates). These vanes "preswirl" the refrigerant before it enters the impeller. By changing the refrigerant's angle of entry, inlet vanes lessen the ability of the impeller to take in the refrigerant. As a result, each inlet vane position creates a new compressor performance characteristic without changing the rotational speed of the impeller.

period three
Compressor Capacity Control

notes

Multistage Compressor

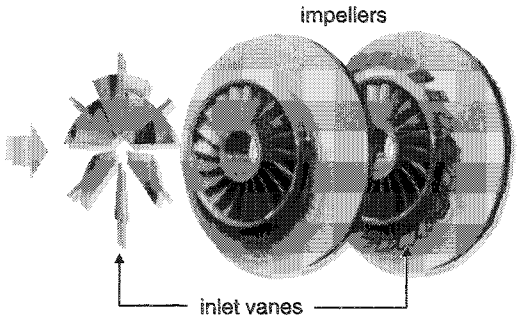

Figure 33

In a **multistage centrifugal compressor**, the operating characteristics of each impeller are modulated by the impeller's own set of inlet vanes.

This example shows 2 impellers in series. These impellers share the task of compressing the refrigerant. Centrifugal water chillers are generally available with 1, 2, or 3 impellers.

Impeller

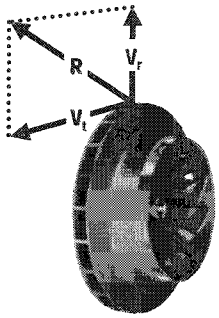

Figure 34

The forces that act on the refrigerant vapor within the centrifugal compressor impeller can be broken down into 2 components. One component acts to move the refrigerant away from the impeller in a radial direction. This component is called **radial velocity (V_r)**.

The second component acts to move the refrigerant in the direction of impeller rotation. This component is called **tangential velocity (V_t)**.

Together, these components generate the **resultant velocity vector (R)**, the length of which is proportional to the amount of kinetic energy in the

Compressor Capacity Control

notes

refrigerant. Recall that kinetic energy is converted to static energy, or static pressure.

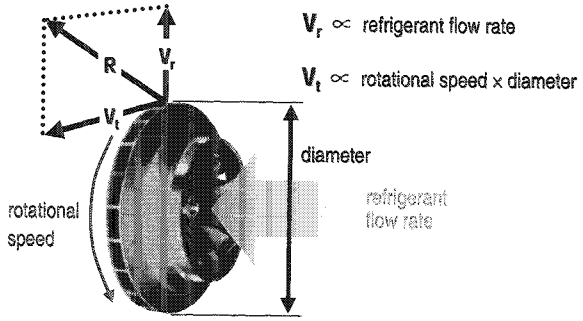

Figure 35

The radial velocity **(V_r)** for a given compressor is directly proportional ($\propto$) to the flow rate of refrigerant vapor through the compressor.

The tangential velocity **(V_t)** is proportional to the product of impeller rotational speed and impeller diameter.

Therefore, the static-pressure-producing capacity of a compressor can be adjusted by changing the flow rate of refrigerant, the impeller speed, or the diameter of the impeller.

Compressor Capacity Control

notes

Compressor Unloading

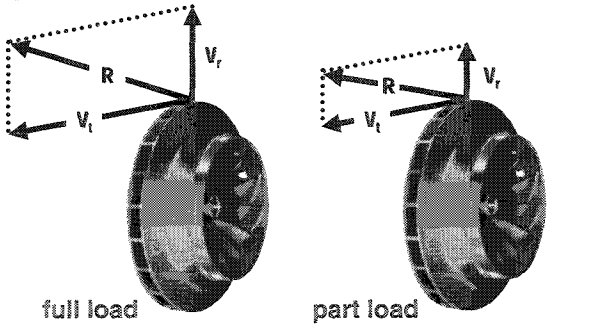

Figure 36

Consider a given-diameter compressor impeller that rotates at a constant speed. As the load on the chiller decreases, the inlet vanes partially close and the flow rate of refrigerant through the compressor drops. Radial velocity **(V_r)**, which is proportional to refrigerant flow, decreases as well.

Even though the speed of rotation and diameter of the impeller are constant, the tangential velocity **(V_t)** (which is proportional to the product of impeller rotational speed and impeller diameter) drops because of the pre-swirling of the refrigerant caused by the inlet vanes.

The result is a shorter resultant velocity vector **(R)**, which means that less static pressure is generated.

period three
Compressor Capacity Control

notes

Surge

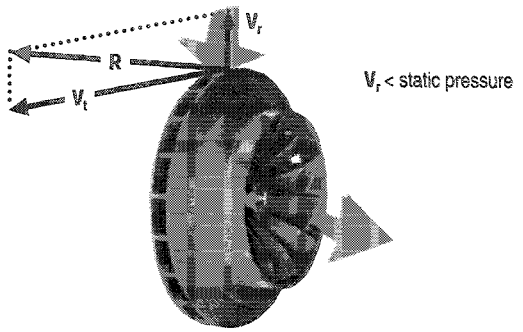

Figure 37

As the load and the corresponding refrigerant flow rate continue to fall, the radial velocity (force) drops, too. At some point, the radial force becomes smaller than the generated static pressure, letting the pressurized refrigerant vapor flow backward from the diffuser passages into the impeller. This instantaneously reduces the pressure within the passages below the radial force and the compressor is able to re-establish the proper direction of refrigerant flow.

This condition is known as **surge**. So long as this unstable load condition exists, the refrigerant alternately flows backward and forward through the compressor impeller, generating noise and vibration.

Compressor Map

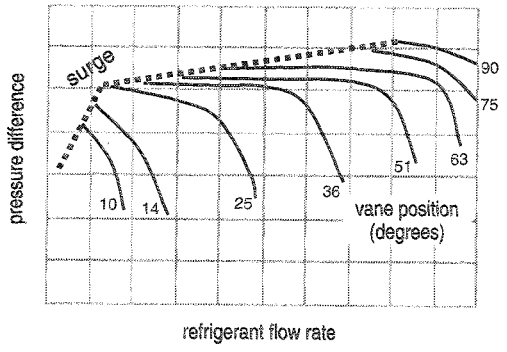

Figure 38

These curves represent the performance of a typical 2-stage compressor over a range of inlet vane positions. The pressure difference between the compressor inlet (evaporator) and outlet (condenser) is on the vertical axis and the refrigerant flow rate is on the horizontal axis. The dashed line represents the

notes

conditions that cause the compressor to surge. Any operating point that falls to the right of this line is satisfactory for stable operation.

Operating Point

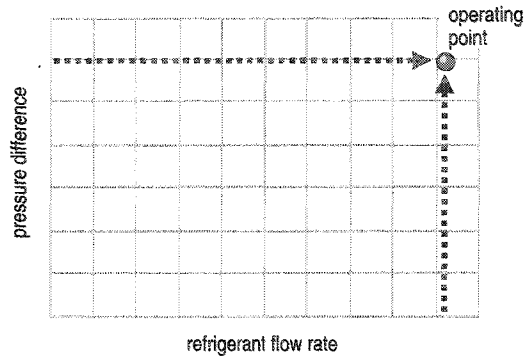

Figure 39

To balance the load on the chiller, the compressor must pump a certain quantity of refrigerant vapor at evaporator pressure and elevate it to the pressure dictated by the condensing conditions.

The intersection of the refrigerant flow rate and the pressure difference between the inlet and outlet of the compressor identifies the compressor **operating point.**

compressor map for a
2-Stage Compressor

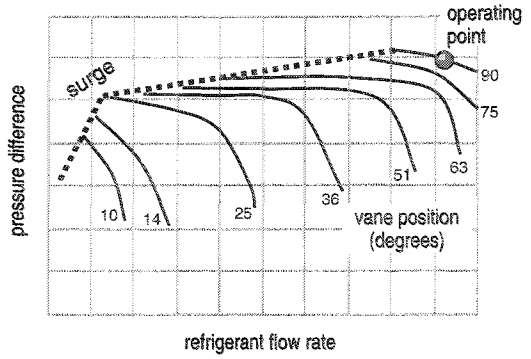

Figure 40

Superimposing the operating point on the previous compressor performance curves establishes the point at which the compressor will balance the load. In this example, the compressor will balance the load with its inlet vanes open 90°.

Compressor Capacity Control

notes

compressor map for a
2-Stage Compressor

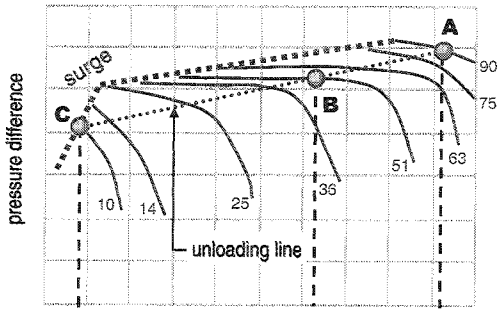

Figure 41

The starting point **(A)** is the full-load operating point. As the load on the chiller decreases, the inlet vanes partially close, reducing the flow rate of refrigerant vapor through the compressor and balancing the chiller capacity with the new load **(B)**.

Less refrigerant, and therefore less heat, is transferred to the condenser. Since the heat rejection capacity of the condenser is now greater than required, the refrigerant condenses at a lower temperature and pressure. This reduces the pressure difference between the evaporator and the condenser.

Continuing along the unloading line, the compressor remains within its stable operating range until it reaches the surge region at **C**.

Compressor Capacity Control

notes

Adjustable-Frequency Drives

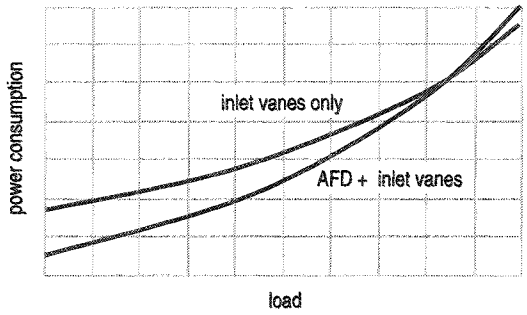

Figure 42

An **adjustable-frequency drive (AFD)**, or variable-speed drive, is another device used to vary the capacity of a centrifugal compressor. AFDs are widely used with fans and pumps, and with the advancement of microprocessor-based controls for chillers, they are now being applied to centrifugal water chillers.

Using an AFD with a centrifugal chiller can degrade the chiller's full-load efficiency. It will, however, offer energy savings by reducing motor speed at low-load conditions when cooler condenser water is available. An AFD also controls the inrush current at start-up, reducing stress on the compressor motor.

Certain system characteristics favor the application of an adjustable frequency drive, including:

- A substantial number of part-load operating hours
- The availability of cooler condenser water
- Chilled-water reset control
- High electrical charges

Performing a comprehensive energy analysis is the best method of determining if an adjustable-frequency drive is desirable. Depending on the application, it may make sense to take the additional money needed to purchase an AFD and use it to purchase a more efficient chiller instead.

period four
Maintenance Considerations

notes

Centrifugal Water Chillers

period four
Maintenance Considerations

Figure 43

This period discusses general maintenance requirements of centrifugal water chillers. Although some of the information applies specifically to the design presented in this clinic, requirements for other centrifugal chiller designs are also included.

Maintenance Considerations

- **Operating log**
- **Mechanical components**
- **Heat-transfer surfaces**
- **Fluid analysis**

Figure 44

Once a centrifugal chiller is installed and put into operation, it usually continues to function without a full-time attendant. In many cases, the machine starts and stops on a schedule controlled by a building automation system or a simple time clock. The only daily maintenance requirement is to complete and review the operating log.

Water chillers are designed for maximum reliability with a minimum amount of maintenance. Like all large mechanical systems, however, certain routine maintenance procedures are either required or recommended.

notes

operating log
ASHRAE Guideline 3

- Chilled water inlet and outlet temperatures and pressures
- Chilled water flow
- Evaporator refrigerant temperature and pressures
- Evaporator approach temperature
- Condenser water inlet and outlet temperatures and pressures
- Condenser water flow
- Condenser refrigerant temperature and pressures
- Condenser approach temperature
- Oil pressures, temperature, and levels
- Addition of refrigerant
- Addition of oil
- Vibration levels

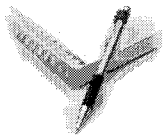

Figure 45

Guideline 3, "*Reducing Emission of Halogenated Refrigerants in Refrigeration and Air Conditioning Equipment and Systems,*" is one of several advisory documents published by the American Society of Heating, Refrigerating and Air-Conditioning Engineers (ASHRAE). This guideline includes a list of recommended data points to be logged daily for each chiller. Much of this data may be available from the display on the chiller control panel.

Special attention should be given to:

- Reviewing the operating log and trends
- Observing the oil pressure drop to determine if the oil filter needs to be replaced
- Monitoring evaporator and condenser approach temperatures
- Observing and recording the oil level
- Monitoring purge pump-out operation

period four
Maintenance Considerations

notes

maintenance considerations
Mechanical Components

- **Required maintenance**
  - Compressor and motor: no maintenance required
  - Controls: no maintenance or calibration required
- **Recommended maintenance**
  - Visually inspect overall unit
  - Inspect safety controls and electrical components
  - Tighten electrical connections
  - Check for leaks

Figure 46

The compressor/motor assembly in direct-drive, hermetic compressor designs requires little periodic maintenance. The hermetic motor eliminates the need for external shaft seals associated with open motors. (These seals are a prime source of oil and refrigerant leaks and should be inspected on a regular basis.) Hermetic motor designs also eliminate the annual coupling and seal inspections, alignment, and shaft seal replacement associated with open motors.

With the advent of microprocessor-based controls, the control panel and auxiliary controllers require no recalibration or maintenance. Remotely-mounted electronic sensors send information to the unit controller, which can be connected to a building automation system to communicate information and allow system-level optimization. These systems can notify the operator with an alarm or diagnostic message when a problem occurs.

As for any mechanical equipment, a daily visual inspection of the chiller is recommended to look for oil leaks, condensation, loosened electrical or control wiring, or signs of corrosion. Special attention should be given to safety controls and electrical components.

A qualified service technician should check the chiller annually for leaks. The United States Environmental Protection Agency (EPA) mandates refrigerant recovery whenever a refrigeration circuit is opened during the normal service of any air conditioning system.

period four
Maintenance Considerations

notes

maintenance considerations
Mechanical Components

▲ **Other design-specific requirements**

- Change oil when oil analysis dictates
- Replace oil filter periodically
- Replace filter drier periodically
- Clean oil strainers annually
- Check shaft alignment annually
- Check coupling annually
- Replace shaft seal every 2 to 4 years
- Compressor teardown inspection every 5 to 10 years

Figure 47

Some centrifugal compressor designs do require periodic maintenance of mechanical system components. This includes oil and refrigerant filter changes, oil strainer changes, and a compressor inspection.

Open-motor compressor designs require shaft alignment, coupling inspection, bearing lubrication, and cleaning of the motor windings on a quarterly or annual basis.

In all cases, strictly follow the maintenance requirements and recommendations published by the manufacturer.

maintenance considerations
Heat Transfer Surfaces

▲ **Recommended maintenance**

- Use a qualified water treatment specialist
- Clean condenser tubes as needed
- Clean water-side strainers
- Test tubes every 3 years

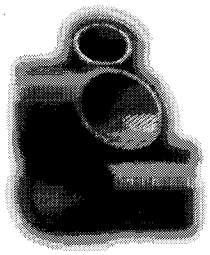

Figure 48

To ensure optimum heat transfer performance, the heat transfer surfaces must be kept free of scale and sludge. Even a thin deposit of scale can substantially reduce heat transfer capacity. Engage the services of a qualified water treatment specialist to determine the level of water treatment required to remove contaminants from the cooling tower water.

period four
Maintenance Considerations

notes

Scale deposits are best removed by chemical means. During this process, the water-cooled condenser is commonly isolated from the rest of the cooling-tower-water circuit by valves, while a pump circulates cleaning solution through the condenser tubes.

Sludge is removed mechanically. This typically involves removing the water boxes from the condenser and loosening the deposits with a stiff-bristled brush. The loosened material is then flushed from the tubes with clear water. As part of this procedure, the strainers in both the chilled-water and cooling-tower-water circuits should be cleaned every year.

Every 3 years (more frequently in process or critical applications), a qualified service organization should perform nondestructive inspections of the evaporator and condenser tubes. The eddy-current tube test is a common method.

Rarely, problems may arise that cause refrigerant or water leaks. These must be repaired immediately.

Fluid Analysis

- **Oil analysis**
  - Conduct annual analysis to verify system integrity
  - Measure oil pressure drop to determine if filter needs changing
  - Measure charge
- **Refrigerant charge**
  - Conduct analysis of refrigerant
  - Inspect purge system

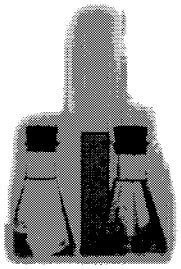

Figure 49

Oil analysis is an important annual maintenance task required for centrifugal water chillers. It may be conducted more frequently for chillers that run continuously or more often than normal. This test, performed by a qualified laboratory, verifies the integrity of the refrigeration system by testing the concentrations of moisture, acidity, and metal. This analysis can determine where problems exist or could potentially develop. By taking oil samples on a regular basis, normal operating trends for the compressor and bearing metals can be analyzed. Instead of adopting a "change the oil once a year whether it needs it or not" approach, regular oil analyses can be used to determine proper oil change intervals and predict major problems before they occur.

Refrigerant analysis measures contamination levels and determines suitability for continued use. It can also determine if recycled refrigerant is suitable for reuse. Refrigerant analysis helps extend the life of the existing charge and ensures that the chiller is operating at peak efficiency.

period four
Maintenance Considerations

notes

Regularly logging oil and refrigerant charges, and examining the trends of this data, can help identify potential problems before they occur.

Oil Analysis

▲ **Why perform regular oil analysis?**

- Helps reduce maintenance costs
- Detects problems without compressor disassembly
- Extends service life of oil charge
- Reduces environmental problems related to oil disposal
- Helps maintain compressor efficiency and reliability
- Helps lower refrigerant emissions



Figure 50

An oil analysis is a key preventive maintenance measure and should be conducted at least annually. It will help the compressor last longer while maintaining chiller efficiency and reducing refrigerant emissions.

A certified chemical laboratory can be contracted to perform the analysis for all types of compressors. Often the chiller manufacturer can provide this service.

notes

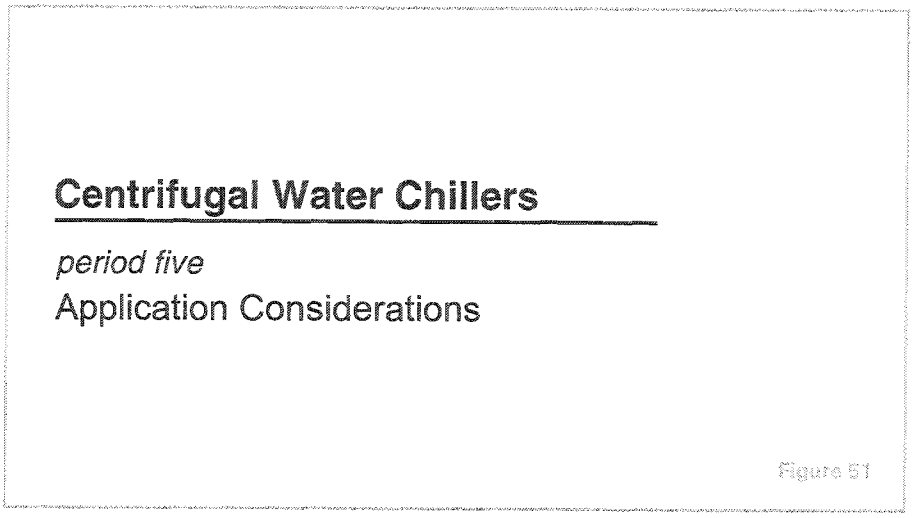

Several considerations must be addressed when applying centrifugal water chillers, including:

- Condensing temperature control
- Constant or variable evaporator-water flow
- Short evaporator-water loops
- Heat recovery
- Free cooling
- Equipment certification standards

While not all-inclusive, this list of considerations does represent some of the key issues.

notes

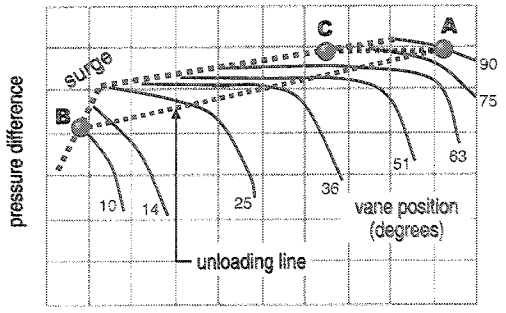

Figure 52

Condensing Temperature Control

To achieve stable compressor unloading over a wide range of conditions, a reduction in condensing pressure (condenser relief) must accompany a reduction in load.

The starting point **(A)** is the full-load operating point. As the chiller load decreases, the flow rate of refrigerant vapor through the compressor also decreases. In turn, the pressure difference between the evaporator and the condenser moves the operating point downward toward **B**.

If the condenser pressure had been controlled to a constant value instead, the compressor would have unloaded along a nearly constant pressure line toward **C**. This would result in a greatly reduced range of operation.

Condenser relief is, however, only beneficial to a certain point. ALL chillers require a minimum pressure difference between the evaporator and condenser to ensure proper management of oil and refrigerant. This minimum pressure difference depends on the chiller's design and controls. The most common method of maintaining this pressure difference at various load conditions is to control the condensing temperature by varying the temperature or flow rate of water through the condenser. By controlling condensing temperature, most centrifugal water chillers can start and operate over a wide range of conditions.

Controlling condensing temperature: (1) maintains chiller efficiency, (2) maintains the required pressure differential between the evaporator and condenser for controlled flow through the refrigerant metering system, and (3) prevents the pressure imbalance that could cause oil loss problems.

notes

condensing temperature control

Cooling Tower Bypass

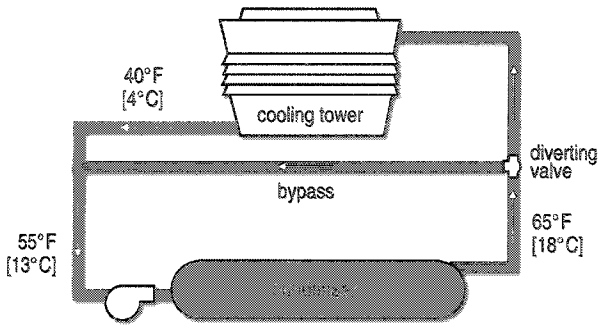

Figure 53

Controlling the refrigerant pressure difference between the evaporator and condenser of a water-cooled chiller is accomplished by varying the temperature or flow rate of the water flowing through the condenser. The following are 5 common methods used to control condensing temperature:

1) Cycling or varying the speed of the cooling tower fans to control the temperature of the water leaving the cooling tower

2) Using a cooling tower bypass pipe to mix warmer leaving-condenser water with the colder tower water and control the temperature entering the condenser as illustrated here

3) Modulating a throttling valve to restrict the flow of water through the condenser

4) Using a chiller bypass pipe to vary the flow rate of water through the condenser

5) Using a variable-speed drive on the condenser water pump to vary the water flow rate through the condenser

Each of these strategies has its advantages and disadvantages. Selecting the appropriate condensing temperature control scheme will depend on the specific requirements of the application.

The water flow rate through the chiller condenser must stay between the minimum and maximum condenser bundle flow rates specified by the chiller manufacturer.

notes

evaporator water flow
Constant or Variable Flow

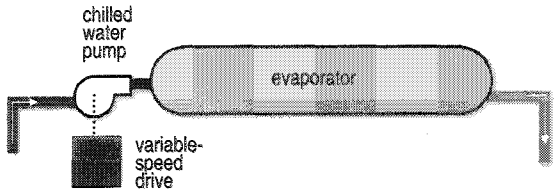

Figure 54

Constant or Variable Evaporator Water Flow

Previous chiller designs required that a constant flow rate of water be maintained through the evaporator. This requirement has changed due to advances in chiller controls. Increased sensing and control capabilities now allow chiller manufacturers to design controls that monitor, and respond faster to, fluctuating conditions.

While the chiller may be able to handle variable water flow through the evaporator, the specific application of the chilled water system may not warrant variable flow. As always, each application should be analyzed to determine if variable evaporator water flow is warranted.

variable evaporator water flow
Limitations

- **Maintain minimum and maximum water flow rates through the chiller evaporator**
- **Rate at which the evaporator water flow changes must be kept below the corresponding limit to:**
  - Maintain the chilled water set point control
  - Keep the chiller on line
  - Protect the chiller from damage

Figure 55

The controls on many current chiller designs can properly control the chiller in response to varying evaporator flow rates, with the following limitations:

notes

1) The water flow rate through the chiller evaporator must stay between the minimum and maximum flow rates for the evaporator bundle, as specified by the chiller manufacturer. These limits depend on the specific design variables of the actual evaporator bundle such as the number of tubes, number of passes, and geometry. Implementation of a method for sensing evaporator water flow through each chiller is the only way to make sure that the water flow rate stays within these limits.

2) The rate of change for the evaporator water flow rate must not exceed a specified level, depending on the level of protection desired. For example, the maximum rate of change to maintain the chilled water set point is more stringent than the maximum rate of change to keep the chiller on line. There are 3 common levels of protection desired: maintaining chilled water set point control, keeping the chiller on line, and protecting the chiller from damage.

The limits for these different levels of protection should be obtained from the chiller manufacturer.

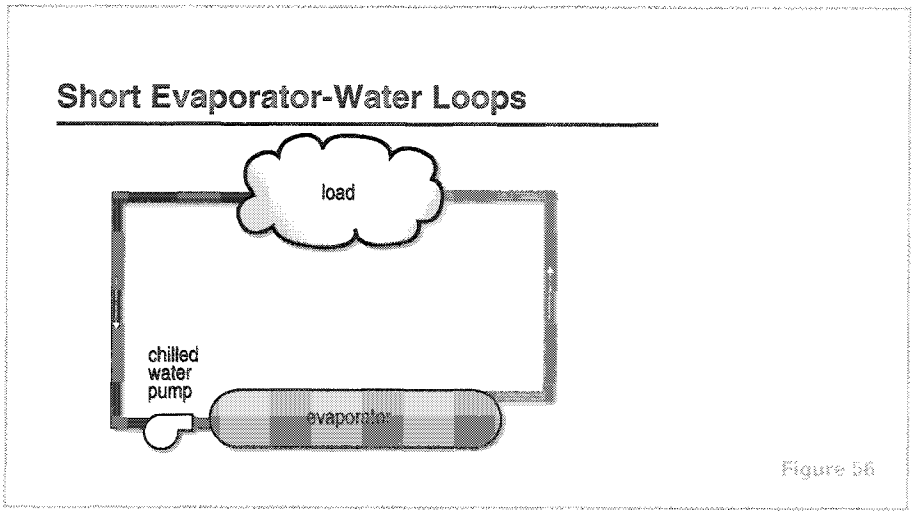

Figure 56

Short Evaporator-Water Loops

Proper chilled water temperature control requires that the temperature of the chilled water returning to the evaporator not change any faster than the chiller controls can respond. The volume of water in the evaporator loop acts as a buffer, ensuring that the return water temperature changes slowly and, therefore, providing stable temperature control. If there is not a sufficient volume of water in the loop to provide an adequate buffer, temperature control can be lost, resulting in erratic system operation.

The chiller manufacturer should be consulted for volume requirements of the evaporator-water loop.

notes

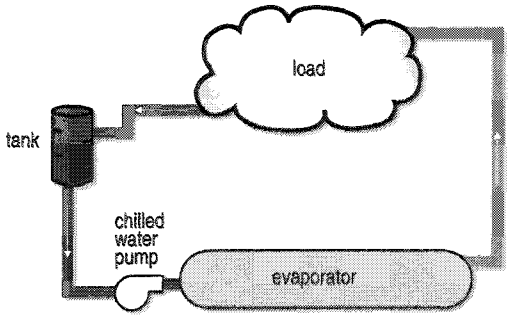

Figure 57

Short water loops may be unavoidable in close-coupled or very small applications, particularly in systems where the load consists of only a few air handlers or processes.

To prevent the effect of a short water loop, a storage tank or large header pipe can be added to the system to increase the volume of water in the loop and ensure a slowly changing return water temperature.

A second solution is to reduce the water flow rate in the chilled water loop while using the same size pipes. This also increases the loop time—the time it takes a particle of water to travel through the chilled water loop—and ensures that the return water temperature changes slowly. This solution has the added benefit of reduced pumping energy requirements.

period five
Application Considerations

notes

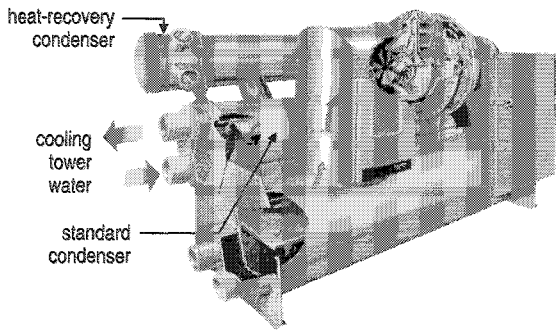

Figure 58

Heat Recovery

Salvaging usable heat from the refrigeration cycle—heat that would normally be rejected to the atmosphere—can significantly reduce the operating costs of many buildings.

Heat recovery is most commonly accomplished using 2 condensers and the fact that hot refrigerant vapor migrates to the area with the lowest temperature. Raising the refrigerant condensing temperature in the standard condenser prompts the refrigerant to flow instead to the second condenser, where it rejects its heat to the water flowing through the tubes. The condensing temperature in the standard condenser is controlled by varying the temperature or the flow rate of the cooling tower water.

Typical uses for the hot water from the second condenser include: heat for spaces around the perimeter of the building, reheat coils in air conditioning systems, and bathroom, laundry, or kitchen requirements. Any building with a simultaneous heating and cooling load is a potential candidate for heat recovery.

notes

Heat-Recovery Chiller Options

heat-recovery (dual) condenser	auxiliary condenser	heat pump
◆ Second, full-size condenser	◆ Second, smaller size condenser	◆ No extra condenser
◆ Large heating loads	◆ Preheating loads	◆ Large base heating loads or continuous operation
◆ High hot water temperatures	◆ Moderate hot water temperatures	◆ High hot water temperatures
◆ Controlled	◆ Uncontrolled	◆ Controlled
◆ Degrades chiller efficiency	◆ Improves chiller efficiency	◆ Chiller efficiency preserved

Figure 59

Three types of heat-recovery chillers are commonly available:

The **dual-condenser**, or **double-bundle**, heat-recovery chiller contains a second, full-size condenser that serves a separate hot water loop. It is capable of more heat rejection and higher leaving-water temperatures. This type of chiller allows the amount of heat being rejected to be controlled, although chiller efficiency is sacrificed for higher hot water temperatures.

Similarly, an **auxiliary-condenser** heat-recovery chiller makes use of a second, smaller condenser bundle. It is not capable of rejecting as much heat as the dual-condenser chiller. Since its leaving-water temperatures are also lower, it is typically used to preheat returning hot water before it goes to the primary heating equipment or to preheat incoming water prior to entering a traditional water heater. It requires no additional controls and actually improves chiller efficiency.

A **heat-pump** chiller is a standard chiller (no extra shells are required) applied where the useful heat transfer occurs in the condenser, not the evaporator. The evaporator is connected to the chilled water loop, typically upstream of other chillers, but it only removes enough heat from the chilled water loop to handle the heating load served by the condenser water loop. This application is useful in a multiple-chiller installation, where there is a base or year-round comfort or process load, or where the quantity of heat required is significantly less than the cooling load. Chiller efficiency is not compromised.

notes

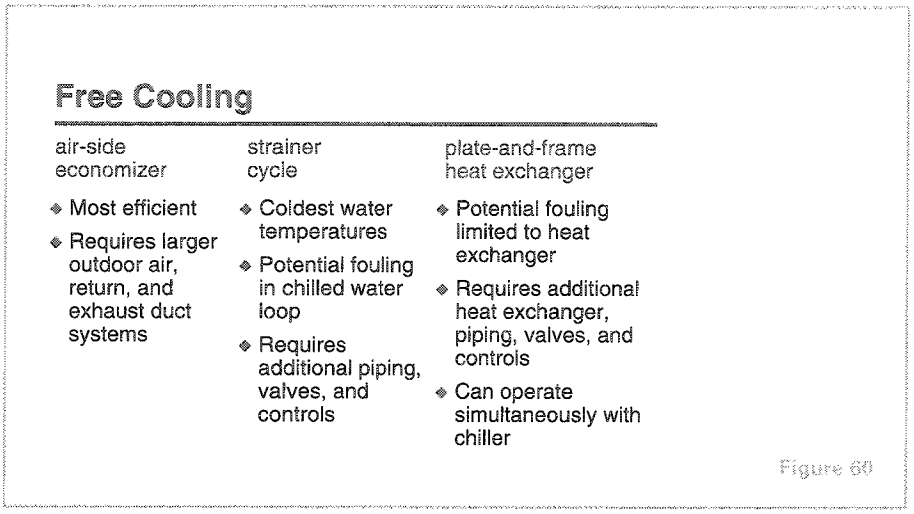

Figure 60

Free Cooling

Many buildings require some form of year-round cooling to handle interior spaces or other loads. When the outdoor air temperature falls below the indoor dew point temperature, it is possible to use an **air-side economizer** to satisfy these cooling requirements. This method of "free cooling" involves using outdoor air for cooling instead of recirculating warmer indoor air. It is the most efficient method of free cooling because it allows all of the chilled water and/or refrigeration system components to be turned off. This method, however, requires larger duct systems to deliver the outdoor air to the air handler and to return and exhaust this larger amount of air.

A second method of applying free cooling is to pump water from the cooling tower loop directly into the chilled water loop when its temperature is low enough to satisfy the cooling load. This is commonly called the **strainer cycle** because a strainer or filter is needed to prevent debris and contaminants carried by the cooling tower water from entering the chilled water loop. Although this method is very efficient, the contamination common in open cooling tower systems causes concern about "fouling" (deposits of scale or sludge) inside the chilled water coils. Ongoing treatment of the chilled water loop is required.

Another method of providing free cooling is similar to the strainer cycle but involves the use of a **plate-and-frame heat exchanger**, or **water-side economizer**, to isolate the chilled water loop from the cooling tower loop. This is a popular method of free cooling because it is efficient and eliminates potential contamination of the chilled water loop. In addition, the heat exchanger can be operated simultaneously with the chiller.

notes

free cooling
Refrigerant Migration

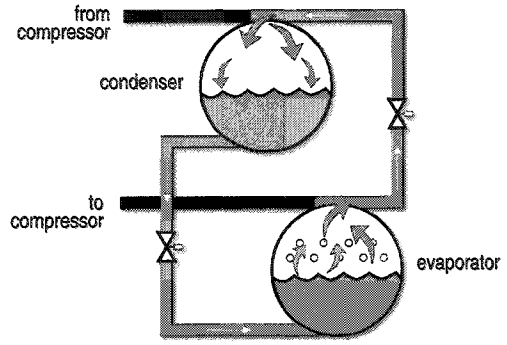

Figure 61

This leads to the discussion of a free cooling principle called **refrigerant migration**. It involves adapting a water chiller so that it functions as a simple heat exchanger.

When the available condenser water is cooler than the desired chilled water temperature, the compressor is turned off and bypass valves in the chiller refrigerant circuit are opened to let the refrigerant circulate without help from the compressor. Because refrigerant migrates to the area with the lowest temperature, refrigerant boils in the evaporator and the vapor flows to the cooler condenser bundle. After the refrigerant condenses, it flows (by gravity) back to the evaporator.

The advantages of refrigerant migration are these: no extra components are required in the system, control is performed by the chiller itself, and there are no additional fouling concerns. It is possible for the free cooling chiller to satisfy many cooling load requirements without operating the compressor, especially when the system can accommodate warmer chilled water temperatures at part-load conditions.

notes

equipment certification standards
ARI Standard 550/590

- **Purpose**
  - Establish definitions, testing, and rating requirements
- **Scope**
  - Factory designed and prefabricated water chillers
  - Vapor-compression refrigeration
  - Air-cooled and water-cooled condensing

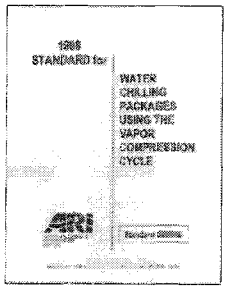

Figure 62

Equipment Certification Standards

The Air Conditioning & Refrigeration Institute (ARI) establishes rating standards for packaged HVAC equipment. ARI also certifies and labels equipment through programs that involve random testing of a manufacturer's equipment to verify published performance.

The overall objective of ARI Standard 550/590–1998 is to promote consistent rating and testing methods for all types and sizes of water chillers, with an accurate representation of actual performance. It covers factory-designed, prefabricated water chillers, both air-cooled and water-cooled, using vapor-compression refrigeration. This generally includes chillers with centrifugal, helical-rotary (screw), reciprocating, or scroll compressors.

equipment certification standards
ARI Standard 550/590

- **Standard rating conditions**
  - Common system conditions for published ratings
  - Fouling factor
- **Integrated Part Load Value (IPLV)**
  - Part-load efficiency rating
  - Based on an "average" single-chiller installation
  - Standard operating conditions

Figure 63

The standard rating conditions used for ARI certification represent typical design temperatures and flow rates for which water-cooled and air-cooled systems are designed. They are not suggestions for good design practice for a

notes

given system—they simply define a common rating point to aid comparisons. Trends toward improved humidity control and energy efficiency have changed some of the actual conditions selected for specific applications.

Impurities in the chilled- and condenser-water systems eventually deposit on evaporator and condenser tube surfaces, impeding heat transfer. Catalogued performance data includes a fouling factor that accounts for this effect to more closely predict actual chiller performance.

ARI's part-load efficiency rating system establishes a single, blended estimate of stand-alone chiller performance. The Integrated Part Load Value (IPLV) predicts chiller efficiency at the ARI standard rating conditions using weighted averages representing a broad range of geographic locations, building types, and operating-hour scenarios, both with and without an air-side economizer. While the weighted averages place greater emphasis on the part-load operation of an average, single-chiller installation, they will not—by definition—represent any particular installation.

Additionally, ARI notes that more than 80 percent of all chillers are installed in multiple-chiller plants. Chillers in these plants exhibit different unloading characteristics than the IPLV weighted formula indicates. Appendix D of the Standard explains this further:

> *...The [IPLV] equation was derived to provide a representation of the average part-load efficiency for a single chiller only. However, it is best to use a comprehensive analysis that reflects actual weather data, building load characteristics, operational hours, economizer capabilities, and energy drawn by auxiliaries such as pumps and cooling towers, when calculating the chiller and system efficiency. This becomes increasingly important with multiple chiller systems because individual chillers operating within multiple chiller systems are more heavily loaded than single chillers within single chiller systems.*

Remember that the ARI rating is a standardized representation. Many chillers do not run at standard rating conditions and few are applied in single-chiller installations. Performing a comprehensive energy analysis is the best method of comparing the system operating cost difference between 2 chillers.

period six
Review

notes

Centrifugal Water Chillers

period six
Review

Figure 64

Let's review the main concepts that were covered in this clinic on centrifugal water chillers.

Review—Period 1

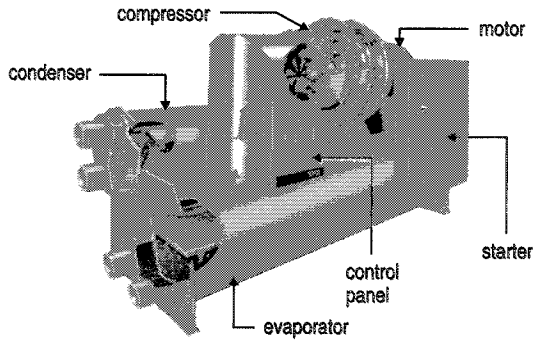

Figure 65

Period 1 introduced the following components of a centrifugal water chiller: compressor, condenser, expansion device, economizer, evaporator, motor, control panel, and starter.

period six
Review

notes

Review—Period 2

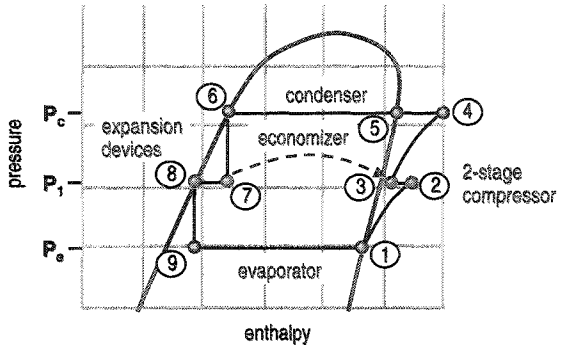

Figure 66

Period 2 described the refrigeration cycle of 2-stage centrifugal water chillers with a pressure-enthalpy chart. The operation of the purge system for low-pressure chillers was also presented.

Review—Period 3

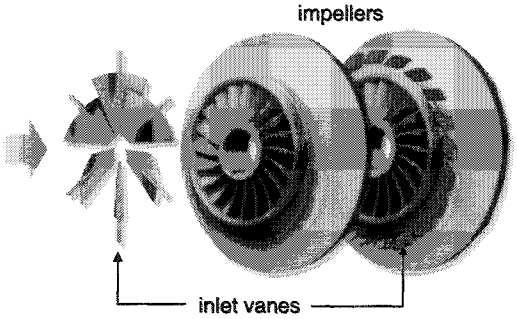

Figure 67

Period 3 further explained the operation of the centrifugal compressor. It described the use of impeller inlet vanes as one method for controlling centrifugal compressor capacity. Surge, multistage compressors, and adjustable-frequency drives were also discussed.

period six
Review

notes

Review—Period 4

- **Maintenance considerations**
  - Operating log
  - Mechanical components
  - Heat-transfer surfaces
  - Fluid analysis

Figure 58

Period 4 described the general maintenance requirements of a centrifugal water chiller, including:

- Recommended data for a daily log
- Required and recommended maintenance for mechanical components
- Recommended maintenance for heat transfer surfaces
- Required analyses for the oil and refrigerant

Review—Period 5

- **Application considerations**
  - Condensing temperature control
  - Constant or variable evaporator-water flow
  - Short evaporator-water loops
  - Heat recovery
  - Free cooling
  - Equipment certification standards

Figure 59

Period 5 presented several considerations in the application of centrifugal water chillers. These included condensing temperature control for water-cooled chillers, constant or variable evaporator-water flow, short evaporator-water loops, heat recovery, free cooling, and equipment certification standards.

period six
Review

notes



Figure 70

For more information, refer to the following references:

- Trane product catalogs for centrifugal water chiller products (Trane literature order numbers CTV-DS-1 and CTV-DS-2)
- Condensing Water Temperature Control (CTV-EB-84)
- Multiple Chiller System Design and Control (CON-AM-21)
- Principles of Centrifugal Chiller Heat Recovery Operation (AM-REF-2)
- ARI Standard 550/590–1998: Implications For Chilled-Water Plant Design (Trane *Engineers Newsletter*, 1999–volume 28, no. 1)
- Variable-Primary-Flow Systems (Trane *Engineers Newsletter*, 1999–volume 28, no. 3)
- Chilled Water Systems *Engineered Systems Clinics* (CWS-CLC-1, 2, 3, and 4)
- ASHRAE Handbook—Refrigeration
- ASHRAE Handbook—Systems and Equipment

Visit the ASHRAE Bookstore at www.ashrae.org.

For information on additional educational materials available from Trane, contact your local Trane sales office (request a copy of the Educational Materials price sheet — Trane order no. EM-ADV1) or visit our online bookstore at www.trane.com/bookstore/.

Quiz

Questions for Period 1

1) A centrifugal compressor converts _____ energy to _____ energy.

2) Does the refrigerant velocity increase in the impeller, diffuser passages, or volute of the compressor?

3) What is the benefit of using an economizer cycle with a multistage centrifugal compressor?

4) What is the difference between a hermetic and an open motor?

Questions for Period 2

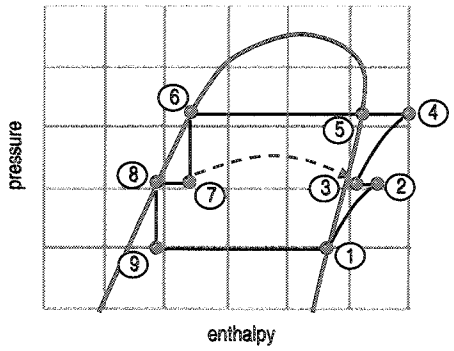

Figure 71

5) Using the pressure-enthalpy diagram in Figure 71, identify the following process of the 2-stage centrifugal chiller's refrigeration cycle:

a) ① to ②

b) ⑦ to ③

c) ⑨ to ①

6) Air, moisture, and other noncondensable gases are removed from a _____-pressure chiller by what component?

Questions for Period 3

7) What velocity component is directly proportional to the refrigerant flow rate through the compressor?

Quiz

8) What velocity component is directly proportional to the impeller's rotational speed times its diameter?

9) What are the 2 most common devices used to vary the capacity of a centrifugal compressor?

Questions for Period 4

10) Explain why proper water treatment is important.

Questions for Period 5

11) The refrigerant migration method of free cooling works because refrigerant migrates from the area of _____ temperature to the area of _____ temperature.

12) What is the purpose of a fouling factor?

Answers

1) kinetic energy to static energy

2) impeller

3) By flashing a portion of the refrigerant prior to entering the evaporator, the economizer reduces the compressor power required since the refrigerant vapor generated in the economizer only needs to be compressed by the higher-stage impeller.

4) A hermetic motor is totally enclosed within the chiller's refrigeration system and the heat it generates is absorbed by liquid refrigerant. An open motor is mounted externally—outside of the chiller's refrigeration system—and uses a coupling to connect the motor and compressor shafts. The heat generated by the open motor is rejected to the air drawn in from the equipment room.

5) **a)** first stage of compression or first-stage impeller

b) economizer

c) evaporator

6) low-pressure chiller; purge system

7) radial velocity (V_r)

8) tangential velocity (V_t)

9) inlet vanes and adjustable-frequency (or variable-speed) drive

10) The heat transfer (tube) surfaces inside the chiller must be kept free of scale and sludge to ensure optimum performance. Even a thin deposit of scale can substantially reduce heat transfer capacity.

11) higher; lower

12) It is used to more closely predict actual chiller performance by accounting for the effect of impurities in the chilled- and condenser-water systems. These impurities will eventually deposit on evaporator and condenser tube surfaces, impeding (fouling) heat transfer.

Glossary

adjustable-frequency drive (AFD) A device used to vary the capacity of a centrifugal compressor by varying the speed of the motor that rotates the impeller(s).

air-side economizer A method of free cooling that involves using cooler outdoor air for cooling instead of recirculating warmer indoor air.

ARI Air Conditioning & Refrigeration Institute

ARI Standard 550/590 A publication titled *"Standard for Water Chilling Packages Using the Vapor-Compression Cycle,"* used to promote consistent rating and testing methods for all types and sizes of water chillers. It covers factory-designed, prefabricated water chillers, both air-cooled and water-cooled, using the vapor-compression refrigeration cycle.

ASHRAE American Society of Heating, Refrigerating and Air Conditioning Engineers

ASHRAE Guideline 3 A publication titled *"Reducing Emission of Halogenated Refrigerants in Refrigeration and Air Conditioning Equipment and Systems,"* that includes a recommended list of data points to be logged daily for each water chiller.

compressor The mechanical device used by the chiller to increase the pressure and temperature of the refrigerant vapor.

condenser The region of the chiller where refrigerant vapor is converted to liquid as it rejects heat to water or air.

control panel The microprocessor-based panel that monitors the chiller's operation, protects it from damage, provides the operator with data and diagnostic messages, and permits interfacing with a building automation system.

diffuser passages Passages inside the centrifugal compressor that start out small and become larger as the refrigerant travels through them. As the size of the diffuser passages increases, the velocity, and therefore the kinetic energy, of the refrigerant decreases. This kinetic energy is converted to static energy or static pressure.

direct-drive motor A type of motor that is connected directly to the compressor shaft, in which the impeller rotates at the same speed as the motor.

direct expansion (DX) shell-and-tube evaporator A type of evaporator where refrigerant flows through the tubes and water fills the surrounding shell.

dynamic compression A method of compression that involves converting energy from one form to another to increase the pressure and temperature of the refrigerant vapor.

Glossary

economizer The component of a multistage centrifugal chiller used to remove vapor from the refrigerant mixture after it passes through an expansion device. This reduces the compressor power required since the refrigerant vapor generated in the economizer only needs to be compressed by the higher-stage impeller(s).

enthalpy The property of a refrigerant indicating its heat content, both sensible and latent.

evaporator The region of the chiller where the system chilled water is continuously cooled by boiling the refrigerant as it picks up heat from the returning system water.

expansion device The component of the chiller used to reduce the pressure and temperature of the refrigerant.

flash The process of liquid refrigerant being vaporized by a sudden reduction of pressure.

flooded shell-and-tube evaporator A type of evaporator where water flows through the tubes and refrigerant fills the surrounding shell.

gear-drive motor A type of motor that transfers its energy to the impeller shaft using a set of gears, allowing the impeller to rotate at a higher speed than the motor.

hermetic motor A type of motor that is totally enclosed within the chiller's refrigeration system and rejects its heat to the liquid refrigerant.

impeller The rotating component of a centrifugal compressor that draws refrigerant vapor into its internal passages and accelerates the refrigerant as it rotates, increasing its velocity and kinetic energy.

inlet vanes A device used to vary the capacity of a centrifugal compressor by "pre-swirling" the refrigerant in the direction of rotation before it enters the impeller, lessening its ability to take in the refrigerant vapor.

loop time The amount of time it takes a particle of water to travel through the chilled water loop.

multistage centrifugal compressor A centrifugal compressor that uses more than 1 impeller to share the task of compressing the refrigerant.

open motor A type of motor that is mounted externally—outside of the chiller's refrigeration system—and uses a coupling to connect the motor and compressor shafts. It rejects its heat to air drawn in from the equipment room.

orifice plate A type of expansion device that uses a fixed plate with holes drilled in it to reduce the pressure and temperature of the refrigerant to the conditions of the evaporator.

Glossary

notes

pressure-enthalpy chart A graphical representation of the saturated properties of a refrigerant, plotting refrigerant pressure versus enthalpy.

purge A device used to remove air, moisture, and other noncondensable gases that may leak into a low-pressure chiller.

refrigerant migration A method of free cooling that allows the chiller to be used as a heat exchanger, without operation of the compressor. It is possible, when the condensing temperature of the refrigerant is low enough, for refrigerant to migrate from the evaporator to the condenser.

refrigeration effect The amount of heat that each pound [kg] of liquid refrigerant will absorb when it evaporates.

starter A device used to connect and disconnect the chiller motor and the electrical distribution system.

surge A condition of unstable compressor operation where the refrigerant alternately flows backward and forward through the compressor impeller, generating noise and vibration.

variable-speed drive See adjustable-frequency drive.

volute A large space around the perimeter of a centrifugal compressor that collects refrigerant vapor after compression.

water-cooled condenser A type of condenser that rejects the heat of the refrigerant to water flowing through it.

Comment Card

We want to ensure that our educational materials meet your ever-changing resource development needs. Please take a moment to comment on the effectiveness of this Air Conditioning Clinic.

Centrifugal Water Chillers
One of the Equipment Series
TRG-TRC010-EN

Level of detail (circle one) Too basic Just right Too difficult

Rate this clinic from 1–Needs Improvement to 10–Excellent ...

Content	1	2	3	4	5	6	7	8	9	10
Booklet usefulness	1	2	3	4	5	6	7	8	9	10
Slides/illustrations	1	2	3	4	5	6	7	8	9	10
Presenter's ability	1	2	3	4	5	6	7	8	9	10
Training environment	1	2	3	4	5	6	7	8	9	10

Other comments? _____

_____

_____

About me ...

Type of business _____
Job function _____
Optional: name _____
phone _____
address _____

Give the completed card to the presenter or drop it in the mail. Thank you!

TRANE

The Trane Company • Worldwide Applied Systems Group
3600 Pammel Creek Road • La Crosse, WI 54601-7599
www.trane.com
An American-Standard Company

Response Card

We offer a variety of HVAC-related educational materials and technical references, as well as software tools that simplify system design/analysis and equipment selection. To receive information about any of these items, just complete this postage-paid card and drop it in the mail.

Education materials
- ☐ Air Conditioning Clinic series
- ☐ Engineered Systems Clinic series
- ☐ Trane Air Conditioning Manual
- ☐ Trane Systems Manual

Software tools
- ☐ Equipment selection
- ☐ System design & analysis

Periodicals
- ☐ Engineers Newsletter

Other?
- ☐ _____

About me ...

Name _____
Title _____
Business type _____
Phone/fax _____ _____
E-mail address _____
Company _____
Address _____

_____

_____

Thank you for your interest!

TRANE

The Trane Company • Worldwide Applied Systems Group
3600 Pammel Creek Road • La Crosse, WI 54601-7599
www.trane.com
An American-Standard Company

NO POSTAGE
NECESSARY
IF MAILED
IN THE
UNITED STATES

BUSINESS REPLY MAIL

FIRST-CLASS MAIL PERMIT NO. 11 LA CROSSE, WI

POSTAGE WILL BE PAID BY ADDRESSEE

THE TRANE COMPANY
Attn: Applications Engineering
3600 Pammel Creek Road
La Crosse WI 54601-9985

NO POSTAGE
NECESSARY
IF MAILED
IN THE
UNITED STATES

BUSINESS REPLY MAIL

FIRST-CLASS MAIL PERMIT NO. 11 LA CROSSE, WI

POSTAGE WILL BE PAID BY ADDRESSEE

THE TRANE COMPANY
Attn: Applications Engineering
3600 Pammel Creek Road
La Crosse WI 54601-9985

TRANE®

The Trane Company
Worldwide Applied Systems Group
3600 Pammel Creek Road
La Crosse, WI 54601-7599
www.trane.com

An American Standard Company

Literature Order Number	TRG-TRC010-EN
File Number	E/AV-FND-TRG-TRC010-999-EN
Supersedes	2803-10-983
Stocking Location	Inland-La Crosse

Since The Trane Company has a policy of continuous product improvement, it reserves the right to change design and specifications without notice.

TRANE

Applications Engineering Manual

Multiple-Chiller-System Design and Control

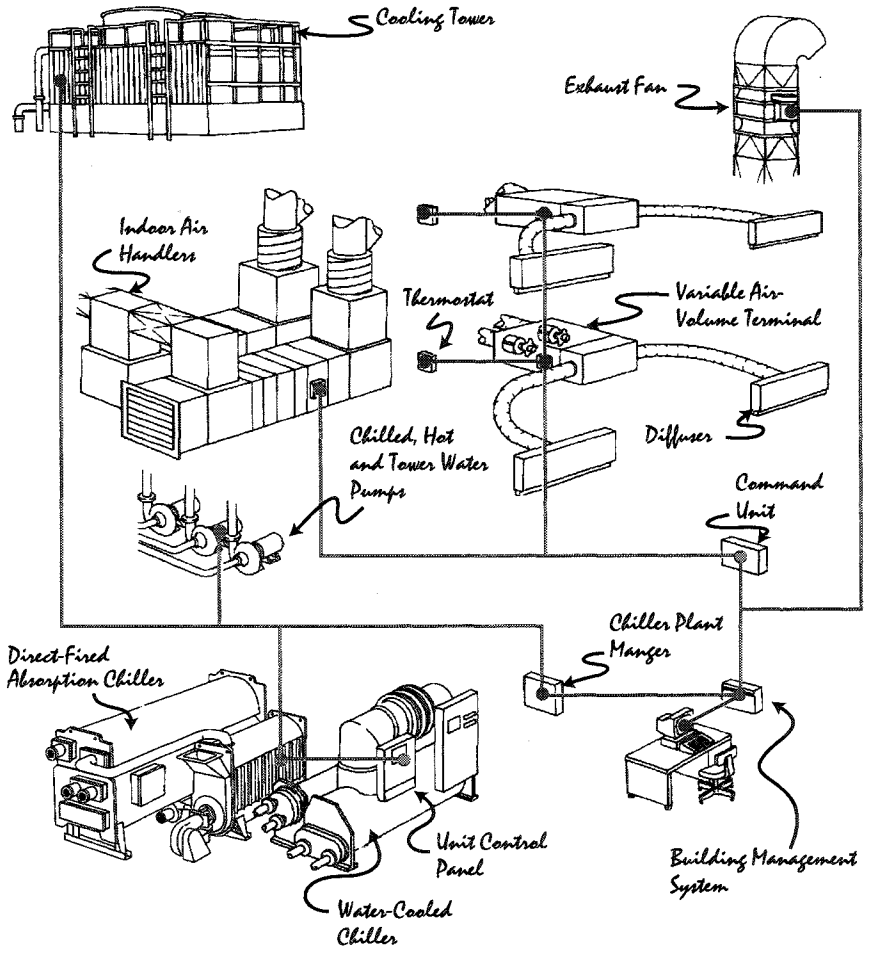

SYS-APM001-EN (October 2000)

TRANE®

Multiple-Chiller-System Design and Control

Mick Schwedler, applications engineer
Ann Yates, information designer

Preface

This manual examines chilled-water-system components, configurations, options, and control strategies. The goal is to provide system designers with options they can use to satisfy the building owners' desires, but this manual is not intended to be a complete chiller-system design manual.

System designers may get the most use from this manual by familiarizing themselves with chilled-water-system basics and understanding the benefits of various options. Thereafter, when a specific job will benefit from these advantages, consult appropriate sections of the manual in detail.

The *Engineers Newsletters* that are referenced in this manual are available at: www.trane.com/commercial/library/newsletters.asp

The Trane Company, in proposing these system design and application concepts, assumes no responsibility for the performance or desirability of any resulting system design. System design is the prerogative and responsibility of the system designer.

© 2000 American Standard Inc. All rights reserved

Contents

Introduction 1

Chilled-Water-Plant Basics 2

Chiller 2
Loads 5
Chilled-water distribution system 7
Condenser-water system 10
Controls 11

Chilled-Water-System Options 13

Chilled- and condenser-water temperatures 13
Chilled- and condenser-water flow rates 15
Misconceptions about low-flow rates 24

System Configurations 27

Parallel chillers 27
Series chillers 29
Primary–secondary (decoupled) systems 31

Pumping Arrangements 36

Flow-based control 38
Chiller sequencing 39

Variable-Primary-Flow Systems 40

VPF advantages 41
VPF caveats 41
Chiller sequencing 43

Chilled-Water-Control Options 47

Chilled-water reset—raising and lowering 47
Critical valve reset 48

Design Considerations 49

Chilled-water pump configurations 49
Bypass line sizing 50
Amount of fluid in the loop 50
Plant expansion 51

Contents

Chilled-Water-System Variations 54
Heat recovery 54
Preferential loading 54
Unequal chiller sizing 58
Series-counterflow application 58
Applications outside the chiller's range 60

Chilled-Water-System Issues 63
Low ΔT syndrome 63
Check valve in the bypass line 63
Failure recovery 64
Alternative energy sources 65
Contingency 66

Condenser-System Variations 69
Condenser flow configurations 69
Cooling-tower-fan control methods 71
Plate-and-frame heat exchanger 72
Well, river, or lake water 72
Condenser-water temperature control 72
Condenser-water pump options 73
Retrofit opportunities 75

Conclusion 78

Glossary 79

References 82

Index 85

Contents

Figures

Figure 1 Typical vapor-compression chiller 2
Figure 2 Valve-controlled loads 6
Figure 3 Uncontrolled coil 7
Figure 4 Simplified distribution system 9
Figure 5 Chilled-water-system performance at part load 19
Figure 6 Annual system operating costs 23
Figure 7 System energy comparison (no pipe) 25
Figure 8 Parallel chillers with single, common pump 27
Figure 9 Parallel chillers with separate, dedicated chiller pumps 28
Figure 10 Series chillers 29
Figure 11 Decoupled arrangement 31
Figure 12 Production loop 33
Figure 13 Distribution loop 34
Figure 14 Campus pumping arrangement 36
Figure 15 Tertiary pumping arrangement 37
Figure 16 Decoupled system supply tee 37
Figure 17 Temperature-sensing 38
Figure 18 Variable-primary-flow system 40
Figure 19 Double-ended decoupled system 53
Figure 20 Parallel preferential loading arrangement 55
Figure 21 Sidestream preferential loading arrangement 56
Figure 22 Plate-and-frame heat exchanger 57
Figure 23 Series-counterflow arrangement 59
Figure 23a Equal lift concept 59
Figure 24 Flow rate out of range for equipment 60
Figure 25 Temperatures out of range for equipment 61
Figure 26 Precise temperature control, multiple chillers 62
Figure 27 Failure recovery 64
Figure 28 Manifolded condenser-water pumps 69
Figure 29 Chiller-tower optimization 73
Figure 30 Decoupled condenser-water system 74
Figure 31 Chiller-tower selection with different chiller capacities 76

Contents

Tables

Table 1 Recommended chiller-monitoring points per ASHRAE Guideline 3-1996 11
Table 2 Standard rating conditions for absorption chillers..... 15
Table 3 Standard rating conditions for chilled-water systems 16
Table 4 Low-flow conditions for chilled-water pump 17
Table 5 Low-flow conditions for cooling tower..... 17
Table 6 Low-flow conditions for condenser-water pump..... 17
Table 7 Total system power 18
Table 8 Effect of decreased water temperature..... 20
Table 9 Retrofit capacity changes..... 21
Table 10 Reduced flow-rate effect 24
Table 11 Flow-rate-fluctuation examples..... 44

Introduction

Many building owners continually search for solutions that allow their businesses to offer higher quality, and to be more competitive and profitable. HVAC systems designers often use chilled-water systems to provide high-quality, cost-effective air conditioning for building owners. With the advent of more flexible chillers, system-level controls, and software analysis tools, the number of chilled-water-systems options has exploded.

Chilled-Water-Plant Basics

Chilled-water plants consist of these functional parts:

- Chillers that produce chilled water
- Loads, often satisfied by coils, that transfer heat from air to water
- Chilled-water distribution pumps and pipes that send chilled water to the previously mentioned loads
- Condenser-water pumps, pipes, and cooling towers that reject heat (for water-cooled chillers)
- Controls that coordinate the operation of the mechanical components together as a system

Chiller

There are a variety of water chiller types. Most commonly, they are absorption, centrifugal, helical rotary, and scroll. Some reciprocating chillers are also available. Chillers can be either air- or water-cooled. Major vapor-compression chiller components include an evaporator, a compressor(s), a condenser, and an expansion device(s). This manual discusses the chiller's evaporator and condenser and their relationship to the chilled-water plant.

Figure 1 Typical vapor-compression chiller

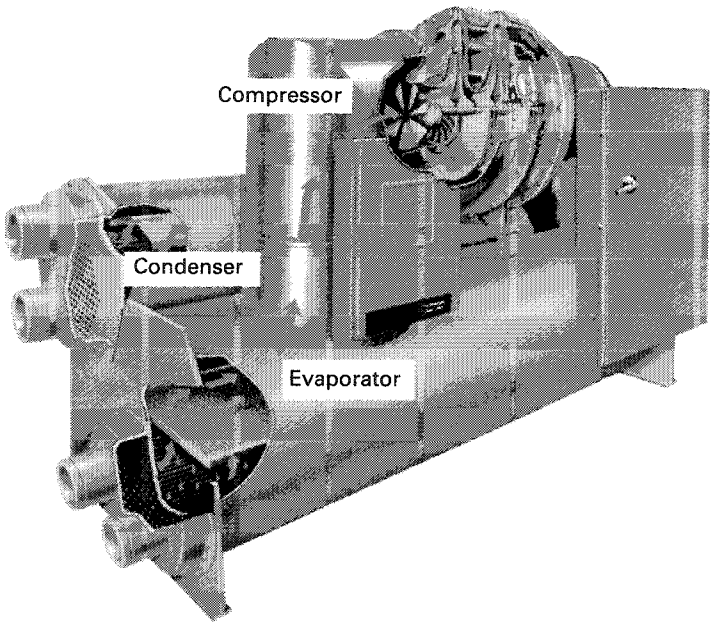

Chilled-Water-Plant Basics

Evaporator

The evaporator section of a water chiller is a shell-and-tube, refrigerant-to-water heat exchanger. Depending on the chiller's design, either the refrigerant or the water is contained within the tubes.

- In a flooded shell-and-tube evaporator, cool, liquid refrigerant at low-pressure enters the distribution system inside the shell and moves uniformly over the tubes, absorbing heat from warmer water that flows through the tubes.
- In a direct-expansion (DX) shell-and-tube evaporator, warmer water fills the shell while the cool, lower-pressure liquid refrigerant flows through the tubes.

In either design, there is an approach temperature, which is the temperature difference between the refrigerant and exit water stream. The approach temperature is a measure of the heat transfer efficiency of the evaporator.

Effect of chilled-water temperature

For a given chiller, as the leaving chilled-water temperature drops, the refrigerant temperature and pressure must also drop. Conversely, as the leaving chilled-water temperature rises, so do the refrigerant temperature and pressure. When the leaving chilled-water temperature changes, the work a compressor must do also changes. The effect of leaving chilled-water temperature change on power consumption can be 1.0 percent to 2.2 percent per degree fahrenheit [1.8 percent to 4.0 percent per degree celsius]. Always consider the energy consumption of the entire system — not only the chiller. It is important to remember that although reducing leaving chilled-water temperature penalizes the chiller, it may benefit the pumps because less water is pumped through the system. System interactions are covered in more detail in the next section *Chilled-Water-System Options.*

Effect of chilled-water flow rate

Since the evaporator is a heat exchanger, it is sensitive to water flow rate. Excessive flow may result in high water velocity, erosion, vibration, or noise. Insufficient flow reduces heat transfer efficiency and causes poor chiller performance. Some designers have concerns over low flow rates causing fouling. Generally, as Webb and Li[3] noted, these concerns are unwarranted since the chilled-water loop is a closed system, thus reducing the chances of materials entering the system and causing fouling. Chilled-water flow through the chiller must be kept within specific minimum and maximum limits. Contact the manufacturer for these limits.

Chilled-Water-Plant Basics

Some chiller controls can accommodate very little flow variation during machine operation.[2] Other, more sophisticated, chiller controls allow some flow variation. Some chillers can tolerate flow rate variations of as much as 30 percent per minute or greater, while others can only tolerate up to 2 percent per minute. It is important that chiller capabilities are matched to system requirements. Contact the chiller manufacturer to determine allowable rate of flow variation before varying the flow through the evaporator in a chiller. Flow variation is discussed in detail in the section *Variable-Primary-Flow Systems*, page 40.

Water-cooled condenser

To cool a building or process, the transferred heat must ultimately be rejected. The total amount of heat rejected includes the sum total of the evaporator load, the compressor work, and the motor inefficiency. In a hermetic chiller, where the motor and compressor are in the same housing, these loads are all rejected through the condenser. In an open chiller, where the motor is separate from the compressor and connected by a shaft, the motor heat is rejected directly to the surrounding air. The evaporator load and the compressor work are rejected through the condenser and the motor heat must be taken care of by the air-conditioning system.

Effect of condenser-water temperature

For a given chiller, as the leaving condenser-water temperature rises, refrigerant temperature and pressure also rise. Conversely, as leaving condenser-water temperature drops, so do refrigerant temperature and pressure. As the refrigerant pressure and temperature changes, the work a compressor must do also changes. The effect of leaving condenser-water temperature change on power consumption can be 1.0 percent to 2.2 percent per degree fahrenheit [1.8 percent to 4.0 per degree celsius]. Always consider the energy consumption of the entire system — not just the chiller. It is important to remember that although raising the leaving condenser-water temperature penalizes the chiller, it may benefit the pumps and cooling tower through the use of reduced flow rates and higher thermal driving-forces on the tower. System interactions are covered in more detail in the section *Condenser-System Variations*, page 69.

Effect of condenser-water flow rate

Since the condenser is a heat exchanger, it is sensitive to water flow rate. For example, excessive flow may result in high water velocity, erosion, vibration, or noise, while insufficient flow reduces heat transfer efficiency and causes poor chiller performance. Therefore, condenser-water flow through the chiller should be kept within a specific range of limits, except during transient startup

conditions. Contact the manufacturer for these limits. Some chillers may allow extended operation below the selected flow rates.

If water velocity through the condenser tubes is too low for significant periods of time and the water is extremely hard, long-term fouling of the tubes may also occur. Webb and Li[3] tested a number of internally-enhanced condenser tubes at low velocity (3.51 ft/s [1.07 m/s]) and high water hardness. While they found that some of the internally-enhanced tubes fouled, in the long term they concluded:

> Because of the high hardness and low water velocity used in these tests, we do not believe that the fouling experienced is typical of that expected in commercial installations. With use of good maintenance practices and water quality control, all of the tubes tested are probably suitable for long-term fouling applications.

It is important to remember that a chiller selected for low flow (as discussed in the next section *Chilled-Water-System Options*) does not necessarily have low velocity through its tubes. If tube fouling is a major concern, consider the use of smooth rather than internally-enhanced tubes in the condenser for ease of cleaning.

Air-cooled condenser

Obviously, air-cooled chillers do not use condenser-water since they reject their heat by having ambient air passed across refrigerant-to-air heat exchangers. In packaged air-cooled chillers, the manufacturers attempt to provide optimal performance by staging fans in response to chiller load and ambient, dry-bulb temperature.

Loads

In comfort cooling applications, loads are usually satisfied by air handlers equipped with coils to transfer heat from conditioned space air to circulating chilled-water. Air is thus cooled and dehumidified as it passes through the finned surface of the cooling coils. Since the psychrometric process of conditioning air takes place at the coils, selection of the optimum coil size and type from the wide variety available is important for proper system performance.

Chilled-Water-Plant Basics

Some specialized process loads do not involve cooling air. Instead, they may involve heat transfer directly within a piece of process equipment, such as the cooling jacket of an injection molding machine. Heat transferred from the loads can be controlled in a number of ways:

- Three-way valve
- Two-way valve
- Variable-speed pump
- Uncontrolled coils

Three-way valve load control

A three-way control valve regulates the amount of water passing through a coil in response to loads. The valve bypasses unused water around the coil and requires a constant flow of water in the system, regardless of load. A drawback of this bypass is that the temperature of the water leaving the three-way valve is reduced at part-load conditions. This can be a major cause of so-called "low Δ T syndrome" discussed on page 63 in the section *Chilled-Water-System Issues*. Three-way valves are used in many existing systems.

Figure 2 Valve-controlled loads

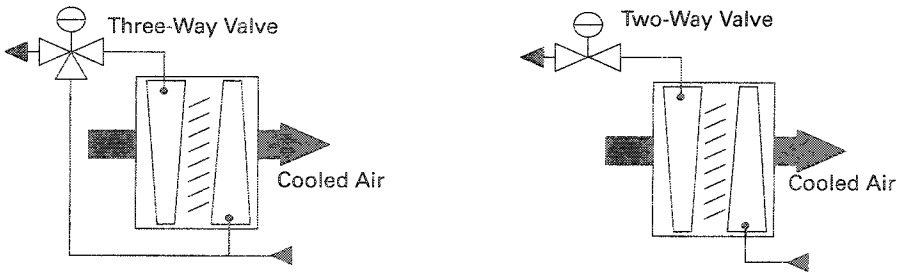

Two-way valve load control

A two-way, water modulating valve at the coil performs the same water throttling function as the three-way valve. The coil sees no difference between these two methods. The chilled-water system, however, sees a great difference. In the case of the two-way valve, *all* flow in the coil circuit is throttled. No water is bypassed. Consequently, a system using two-way valves is a variable-flow chilled-water system. The temperature of the water leaving the coil is not diluted by bypass water so at part-load conditions, the system return-water temperature is higher than with three-way valve control.

Chilled-Water-Plant Basics

Variable-speed pumping load control

By using a pump for each coil, the flow may be controlled by varying the pump speed. In such systems, there may be no control valves at the coil. This can reduce both the valve and the valve installation costs.

Uncontrolled coils

Figure 3 shows a control variation using an uncontrolled or "wild"coil. In this system, control of the conditioned air supply is executed by face-and-bypass dampers that permit a portion of the air to bypass the coil surface. Advantages of the strategy are the elimination of control valves and improved part-load dehumidification. A disadvantage is that all the water is pumped all the time; however, in systems with very small water pressure drops, this system arrangement may work economically.

Figure 3 Uncontrolled coil

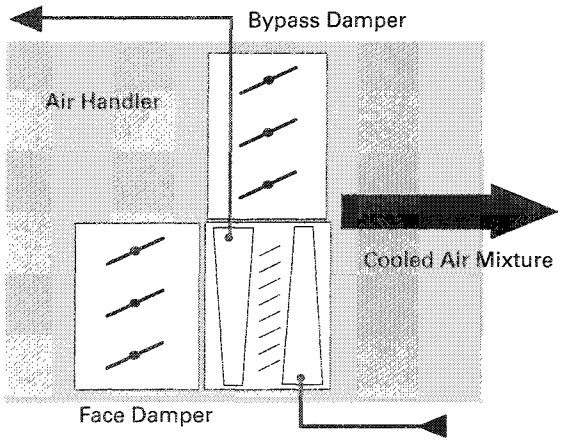

Chilled-water distribution system

Chilled water is circulated through fixed piping — most commonly steel, copper, or plastic — that connects the chiller with various load terminals. Piping is sized to meet a project's pressure loss, water velocity, and construction cost parameters. Pressure drop is overcome by the use of a chilled-water pump.

Chilled-Water-Plant Basics

Chilled-water pump

The purpose of the chilled-water pump is to circulate chilled water within the loop. Generally, the pump must overcome the frictional pressure losses caused by the piping, coils, and chiller and the pressure differential across open control valves in the system. The pump, while working at the system static pressure, does not need to overcome this static pressure. For example, in a forty-story building the pump need not overcome the static pressure due to those forty stories.

The pump is typically located upstream of the chiller, however it may be anywhere in the system, provided that the pump:

- meets the minimum pump net positive suction head requirements. That is, the system pressure at the pump inlet must be both positive and high enough to allow the pump to operate properly;
- maintains the minimum dynamic pressure head at critical system components (usually the chiller). If the dynamic pressure head is not high enough at these components, proper flow will not be established through them;
- accommodates the total pressure (static head plus dynamic head) on system components such as the chiller's evaporator, valves, etc.

Note that the pump heat is added to the water and must be absorbed by the chiller. Generally, this represents a very small temperature increase.

Multiple pumps are often used for redundancy. Depending on the terminal control devices and system configurations, the chilled-water pumps may be either constant or variable-flow.

Chilled-Water-Plant Basics

Distribution piping

By itself, the distribution system is easy to understand. Figure 4 shows a simplified distribution system consisting of multiple cooling coils, each controlled by a thermostat that regulates the flow in its respective coil. The valves may be either three-way or two-way. As previously discussed, three-way valves require constant water flow, while two-way valves allow the water flow in the system to vary. As flow varies, the pump may simply ride its curve or use a method of flow control such as a variable speed drive. See the section *System Configurations*, on page 27, for a detailed discussion of distribution system options.

Figure 4 Simplified distribution system

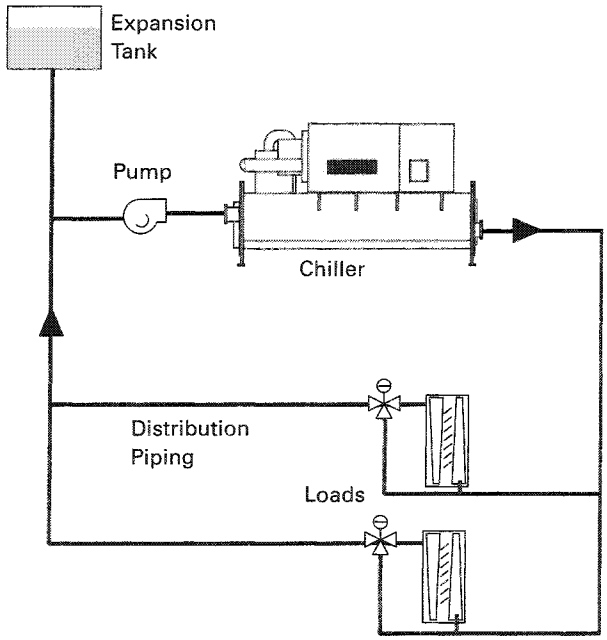

2000 ASHRAE HVAC Systems and Equipment Handbook, Chapter 12, Hydronic Heating and Cooling System Design[1] contains additional reference information on the components of a chilled water distribution system.

The distribution system may contain other components, such as an expansion tank, control valves, balancing valves, check valves, and an air separator, to name a few. The density, and therefore the volume of the water in a "closed" chilled-water distribution system, varies as it undergoes changes in temperature. The expansion tank allows for this expansion and contraction of water volume.

Chilled-Water-Plant Basics

Condenser-water system

As in chilled-water distribution systems, condenser-water system piping — most commonly steel, copper, or plastic — is sized to meet a project's operating pressure, pressure loss, water velocity, and construction cost parameters. Pressure drop through piping and the chiller's condenser, plus the cooling-tower static lift, is overcome by use of a condenser-water pump.

Cooling tower

To reject heat, water is passed through a cooling tower where a portion of it evaporates, thus cooling the remaining water. A particular cooling tower's effectiveness at transferring heat depends on water flow rate, water temperature, and ambient wet bulb. The temperature difference between the water entering and leaving the cooling tower is the range. The temperature difference between the leaving water temperature and the entering wet-bulb temperature is the approach.

Effect of load

As the building load — or heat rejection — decreases, range and approach also decrease. This means that when the building is at part load, the cooling tower can provide colder water at the same ambient wet bulb.

Effect of ambient conditions

As ambient wet-bulb temperature drops, the approach — at a constant load — increases. This must be considered when cooling-tower-control strategies are developed. Detailed descriptions of these conditions appear in the subsection, *Chiller-tower energy balance,* page 72. For additional information, refer to *2000 ASHRAE HVAC Systems and Equipment Handbook,* Chapter 36, "Cooling Towers."[1]

Chilled-Water-Plant Basics

Controls

The chilled-water supply temperature is usually controlled at the chiller. Most commonly, supply water temperature is used as the sensed variable to permit control of chiller capacity to meet system load demand. Supply-temperature control strategies may be used on either constant- or variable-flow systems. As previously discussed, flow control is executed at the load terminals using three-way or two-way valves, or separate pumps for each coil.

Control capabilities run the gamut from slow-acting pneumatic controls, to electromechanical controls, to sophisticated digital controls that use algorithms tuned to give superior performance.

Chiller control

Today's chiller controls are capable of doing more than simply turning the chiller on and off. At a minimum, these controls should monitor:

- Safety points such as bearing temperatures and electrical points that, when out of range, may cause motor failure.
- Data points that may cause operational problems if corrective action is not taken. An example is low chilled-water or refrigerant temperature, which may result in freezing in or around the evaporator tubes.
- General points that should be logged daily to ensure proper chiller performance.

Table 1 lists the ASHRAE-recommended monitoring points.

Table 1 Recommended chiller-monitoring points per ASHRAE Guideline 3-1996

Chilled Water	Flow	Condenser Water	Flow
	Inlet Pressure		Inlet Pressure
	Inlet Temperature		Inlet Temperature
	Outlet Pressure		Outlet Pressure
	Outlet Temperature		Outlet Temperature
Evaporator	Approach Temperature	Condenser	Approach Temperature
	Refrigerant Pressure		Refrigerant Pressure
	Refrigerant Temperature		Refrigerant Temperature
Oil	Level	Refrigerant	Level
	Pressure		Compressor Discharge Temperature
	Temperature		Additional Required
	Additional Required	Vibration Levels	

Chilled-Water-Plant Basics

In addition to monitoring data, it is vital that the chiller controls alert operators to possible problems. Diagnostic messages are necessary for the operator to respond to safety issues and data points that are outside normal operating ranges.

While communicating these diagnostic messages is a requirement, some chiller controls include factory-installed programming that responds to the diagnostic messages. For example, when the chilled-water temperature nears freezing, the chiller sends a diagnostic message and *adapts* its operation by reducing the compressor capacity, raising the chilled-water temperature to a safer condition.

Finally, the chiller controls should communicate with a system-level controller. There are many system aspects that are outside the chiller's direct control, such as condenser-water temperature and the amount of fluid flowing through the evaporator and condenser. To minimize the system energy costs, the system controls must coordinate chiller, pump, cooling-tower, and terminal-unit controls. This can only be done if adequate information is communicated from each system component to the system-level controls.

Pump control

In so-called constant flow systems, the pumps are either on or off, providing relatively constant flow when in the *on* position. In practice, some flow variation will occur as system pressure drop changes. In a variable-flow system, pump control is most often performed by maintaining a pressure differential at a selected point in the system. For example, a variable-speed drive will increase its speed if the sensed pressure differential is too low, or slow down if the pressure differential is too high. The control point is selected to minimize over-pressuring the system and to assure adequate flow at all critical loads. Optimal pumping control strategies are addressed in *Critical valve reset*, page 47.

Chapter references

1 2000 *ASHRAE HVAC Systems and Equipment Handbook,* Chapter 12, Hydronic Heating and Cooling System Design and Chapter 36, Cooling Towers, American Society of Heating, Refrigeration and Air-Conditioning Engineers.

2 Schwedler, M., PE and Bradley, B.; "An Idea for Chilled-Water Plants Whose Time Has Come...Variable-Primary-Flow Systems", *Engineers Newsletter,* Volume 28, No. 3, The Trane Company, 1999.

3 Webb, R.L. and Li, W.; "Fouling in Enhanced Tubes Using Cooling Tower Water, Part I: Long-Term Fouling Data", *International Journal of Heat and Mass Transfer,* 2000.

Chilled-Water-System Options

There are many chilled-water-system design options; however, in a basic sense, each option is a function of flow, temperature, system configuration, and control. This section discusses the effect of flow rate and temperature decisions.

It is important to remember that temperatures and flow rates are variables. By judicious selection of these variables, chilled-water plants can be designed to both satisfy chilled-water requirements and operate cost effectively.

Refer to ARI Standard 550/590–1998, *Standard for Water Chilling Packages Using the Vapor Compression Cycle* and the ARI Standard 560–1992, *Standard for Absorption Water Chiller and Water Heating Package*, for additional information. Both are published by the Air-Conditioning & Refrigeration Institute. (www.ari.org)

Chilled-water systems are often designed using flow rates and temperatures applied in testing standards developed by the Air-Conditioning and Refrigeration Institute (ARI), ARI 550/590–1998[1] for vapor compression chillers and ARI 560–1992[2] for absorption chillers. These benchmarks provide requirements for testing and rating chillers under multiple rating conditions. They are *not* intended to prescribe the proper or optimal flow rates or temperature differentials for any particular system. In fact, as component efficiency and customer requirements change, these standard rating conditions are seldom the optimal conditions for a real system. There is great latitude in selecting flow rates, temperatures, and temperature differences.

Chilled- and condenser-water temperatures

Leaving chilled-water and entering condenser-water temperature selection can be considered independently of their respective flow rates. However, temperatures and flow rates should be selected together to design an efficient and flexible chilled-water-system.

Standard rating temperatures

Currently, the standard-rating-condition temperatures in ARI 550/590[1] and ARI 560[2] are:

- Evaporator leaving water temperature: 44°F [6.7°C]
- Water-cooled-condenser, entering-water temperature: 85°F [29.4°C]
- Air-cooled-condenser, entering-air dry bulb: 95°F [35.0°C]

For years, these temperature definitions were the benchmarks in system designs. Today, designers apply a variety of different temperatures. ARI 550/590 reflects this trend by allowing the chilled-water and condenser-water temperatures to be selected at non-standard points and the chiller to be tested as specified by the standard.

Chilled-Water-System Options

Chilled-water temperatures

Chilled water (without antifreeze) at 34°F (1.1°C) is possible with some chillers that use sophisticated evaporator-design and chiller-control methods.

Currently, comfort cooling systems are designed with chilled-water-supply temperatures that range from 44°F [6.7°C] to 38°F [3.3°C], and, in some cases, as low as 34°F [1.1°C]. Reasons to decrease the chilled-water temperature include these:

- The system design more readily accommodates wider temperature *differences* (lower flow rates) than the standard rating conditions (see the subsection *Selecting flow rates*, page 16).
- Lower water temperature allows lower air temperatures (and flows) to be selected resulting in reduced airside installed and operating costs.
- Colder water in the same chilled-water coil may provide better dehumidification.
- Colder water can be used to increase the capacity of an existing chilled-water distribution system. In some instances, this can save significant capital expenditures to add capacity to large central plants that have reached their flow limits.

Some system designers hesitate to use lower chilled-water temperatures, concerned that:

- the chiller will become less efficient. As discussed earlier, lower chilled-water temperature makes the chiller work harder. However, while the lower water temperature increases chiller energy consumption, reducing the chilled-water flow rate reduces pump energy. This combination often lowers system energy consumption.
- lower chilled-water temperatures may require more insulation on piping to prevent condensation ("sweating"). Assure that pipes are properly insulated at all water temperatures. Lower temperature water will not always require more insulation.

Condenser-water temperatures

Today's chillers can run at various entering condenser-water temperatures, varying from design temperature to the lowest allowable temperature for that particular chiller design. However, many existing older chillers are limited in their allowable condenser-water temperatures. Contact the chiller manufacturer for these limits. Optimal condenser-water-temperature control is discussed in the section, *Condenser-System Variations*, page 69.

Chilled-Water-System Options

Chilled- and condenser-water flow rates

The selection of chilled-water and condenser-water flow rates is a powerful tool that designers have at their disposal. Kelly and Chan[5], and Schwedler and Nordeen[6], found that reducing flow rates can reduce the costs of chilled-water-system installation and/or operation.

Standard-rating flow rates

Presently, the standard-rating-condition flow rates in ARI 550/590 are:

- 2.4 gpm/ton [0.043 lps/kW] for evaporator
- 3.0 gpm/ton [0.054 lps/kW] for condenser

This evaporator flow rate corresponds to a 10°F [5.6°C] temperature difference. Depending on the compressor efficiency, the corresponding condenser temperature difference is 9.1°F to 10°F [5.1°C to 5.6°C].

Absorption chillers are rated using ARI Standard 560–1992, *Standard for Absorption Water Chiller and Water Heating Package*[2]. The evaporator flow rates are the same as those used in ARI 550/590; however, condenser (often called cooling water) flow rates differ depending on the absorption chiller design. Table 2 shows the standard rating conditions for various absorption chillers.

Table 2 Standard rating conditions for absorption chillers

Absorption Chiller Type		Condenser Flow Rate gpm/ton	Condenser Flow Rate lps/kW
Single Effect		3.60	0.065
Double Effect	Steam or hot water	4.00	0.072
	Direct fired	4.50	0.081

Chilled-Water-System Options

Selecting flow rates

Designers may use the standard *rating* conditions to compare manufacturers' performances at exactly the same conditions. However, these standards allow any flow rates to be used and certified comparisons to be made at those conditions. For a given load, as flow rate decreases, the temperature differential increases. Table 3 reflects a 450-ton [1,580-kW refrigeration] chilled-water system, both as a base case and with low flow.

Table 3 Standard rating conditions for chilled-water systems

Chilled Water System		Base Case	Low Flow
Evaporator flow rate, gpm [lps]		1,080 [68.1]	675 [42.6]
Chilled water temperature °F [°C]	Entering	54.0 [12.2]	57.0 [13.9]
	Leaving	44.0 [6.7]	41.0 [5.0]
Condenser flow rate, gpm [lps]		1,350 [85.2]	900 [56.8]
Condenser water temperature °F [°C]	Entering	85.0 [29.4]	85.0 [29.4]
	Leaving	94.3 [34.6]	99.1 [37.3]
Chiller power, kW		256.0	292.0

In this example, notice that the leaving-chilled-water temperature decreases and the leaving-condenser-water temperature increases. This means that the chiller's compressor must provide more lift and use more power. How does this impact system energy consumption? Using the following assumptions, we can calculate system energy usage:

- 80 feet of water [239 kPa] pressure drop through chilled-water piping
- 30 feet of water [89.7 kPa] pressure drop through condenser-water piping
- 78°F [25.6°C] design wet bulb
- 93-percent motor efficiency for pumps and tower
- 75-percent pump efficiency
- Identical pipe size in chilled- and condenser-water loops (either a design decision, or indicating changing flows in an existing system)

The pressure drop through the chiller will change. When using the same size pipe, the pressure drop changes with nearly the square of the flow. While this is true for straight piping, the pressure drop does not follow this exact relationship for control valves or branches serving loads of varying diversity.

Chilled-Water-System Options

Be sure to calculate the actual pressure drop throughout the system. Hazen–Williams and Darcy–Weisbach calculate the change is to the 1.85 and 1.90 power, respectively. The examples here use the more conservative 1.85 power:

$$DP2/DP1 = (Flow2)/(Flow1)^{1.85}$$

Table 4 Low-flow conditions for chilled-water pump

	Base Case	Low Flow
Flow rate, gpm [lps]	1,080 [68.1]	675 [42.6]
System pressure drop, ft water [kPa]	80.0 [239]	33.5 [100]
Evaporator-bundle pressure drop, ft water [kPa]	29.7 [88.8]	12.6 [37.7]
Pump power output, hp [kW]	39.9 [29.8]	10.5 [7.80]
Pump electrical power input, kW	32.0	8.4

Given different flow rates and entering water temperatures, a different cooling tower can be selected for the low-flow condition:

Table 5 Low-flow conditions for cooling tower

	Base Case	Low Flow
Flow rate, gpm [lps]	1,350 [85.2]	900 [56.8]
Static head, ft water [kPa]	19.1 [57.1]	12.6 [37.7]
Tower fan power output, hp [kW]	30.0 [22.4]	20.0 [14.9]
Tower fan electrical power input, kW	24.1	16.0

Table 6 Low-flow conditions for condenser-water pump

	Base Case	Low Flow
Flow rate, gpm [lps]	1,350 [85.2]	900 [56.8]
System pressure drop, ft water [kPa]	30 [89.7]	14.2 [42.5]
Condenser-bundle pressure drop, ft water [kPa]	19.9 [59.5]	9.6 [28.7]
Tower static lift, ft water [kPa]	19.1 [57.1]	12.6 [37.7]
Pump power output, hp [kW]	31.4 [23.4]	11.0 [8.2]
Pump electrical input, kW	25.2	8.8

Chilled-Water-System Options

The total system power is now as follows:

Table 7 Total system power

Component Power (kW)	Base Case	Low Flow
Chiller	256.0	292.0
Chilled-water pump	32.0	8.4
Condenser-water pump	25.2	8.8
Cooling tower	24.1	16.0
Total power for chilled-water system	337.3	325.2

It becomes clear that flow rates can affect full-load system power. Even though the chiller requires more power in the low-flow system, the power reductions experienced by the pumps and cooling tower result in an overall savings for the system. What happens at part-load conditions? Figure 5 shows the part-load performance based on the following assumptions:

- The chilled-water pump includes a variable frequency drive
- The condenser-water pump remains at constant power
- The cooling tower is controlled to produce water temperatures lower than design

Chilled-Water-System Options

Figure 5 Chilled-water-system performance at part load

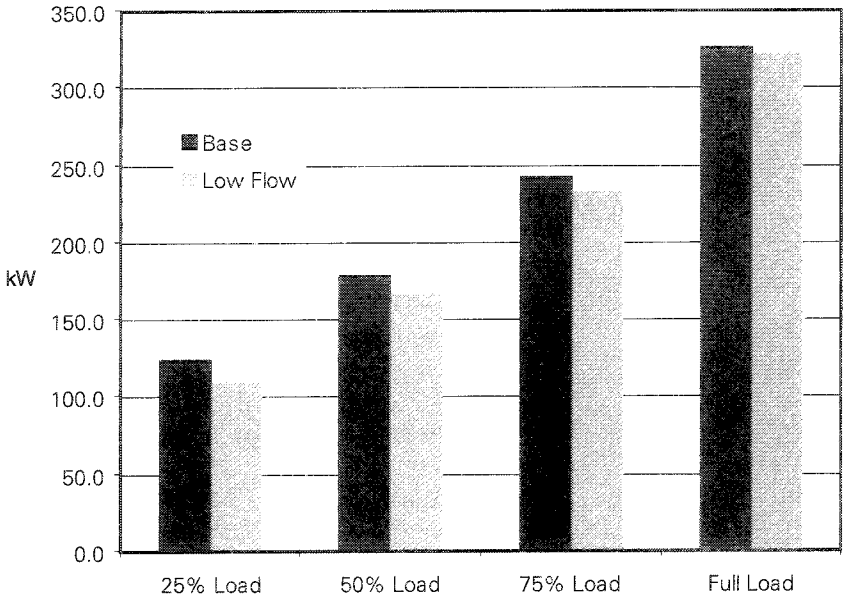

While the magnitude of the benefit of low-flow changes depends on the chiller type used (centrifugal, absorption, helical-rotary, scroll), all chilled-water systems can benefit from judicious use of reduced flow rates.

Coil response to decreased entering water temperature

A coil is a simple heat exchanger. If we want it to deliver the same sensible and latent capacity while we supply it with cooler water, the coil's controls respond by reducing the amount of water passing through it. As the amount of water decreases while the amount of heat exchanged remains constant, the leaving water temperature increases. Therefore, by producing cooler water, a low-flow system can be applied to an existing building. In a retrofit application it is wise to reselect the coil, using the manufacturer's selection program, at a new chilled-water temperature to ensure its performance will meet requirements.

When coil performance data is not available from the original manufacturer, some designers use this approximation. For each 1°F –1.5°F [0.6°C–1.1°C] the water temperature entering the coil decreases, the water returns 1°F [0.6°C] warmer and gives about the same sensible and total capacities.

For example, consider a coil operating at 44°F [6.7°C] entering temperature and 54°F [12.2°C] leaving temperature. By changing the entering-water temperature to 41°F [5.0°C] the coil-leaving temperature will be approximately 56°F –57°F [13.3°C–13.9°C]. Let's look at this example in a table.

Chilled-Water-System Options

Table 8 Effect of decreased water temperature

		Original Selection °F [°C]	Chilled-water reduction for each 1° return water increase °F [°C]			
Coil water temperature	Entering	44 [6.7]	1°	41 [5.0]	1.5°	41 [5.0]
	Leaving	54 [12.2]		57 [13.9]		56 [13.3]

One possible concern of low-supply water temperatures is the ability of the valve to control flow properly at low load conditions. A properly sized valve with good range can work well in low- flow systems. In existing systems, valves may need to be replaced if they cannot operate with the new range of flows, but the coils do not need to be replaced.

Cooling-tower options with low flow

Smaller tower

Like coils, cooling towers are heat exchangers — although often misunderstood heat exchangers. The tower exchanges heat between the entering (warmest) water temperature and the ambient wet bulb. Therefore, in a new system or when a cooling tower is replaced, a low-flow system design allows a smaller, more efficient cooling tower to be selected. How is this possible?

Since the amount of heat rejection is approximately the same in standard-rating-condition and low-flow systems, we can estimate the heat exchange area necessary to reject the heat:

$Q = U A_1 \Delta T_1$, where A = area, U = coefficient of heat transfer, and
ΔT = temperature difference

$= U A_2 \Delta T_2$ or $A_1 \Delta T_1 = A_2 \Delta T_2$

Using standard rating conditions, the temperature difference between tower entering temperature and ambient wet bulb for ΔT_1 is:

$\Delta T_1 = 94.2 - 78 = 16.2°F\ [34.6 - 25.6 = 9.0°C]$

while at typical low-flow conditions for ΔT_2 it is:

$\Delta T_2 = 99.1 - 78 = 21.1°F\ [37.3 - 25.6 = 11.7°C]$

Therefore:

$A_1 \times 16.2 = A2 \times 21.1$ or $A_2 = 0.77\ A_1$

Chilled-Water-System Options

In a cooling tower, the heat exchange capacity can be changed by either surface area or airflow, or some combination of the two. A cooling-tower manufacturer's selection program can give the exact size and power requirements. In the example on pages 16–18, both the cooling-tower size and airflow (hence, required fan power) were reduced.

Same tower, smaller approach

Another option is to use the same cooling tower at a lower flow rate. In a new system, this is a design decision, but in an existing system, it is often a constraint. Given the same heat rejection load, the low flow system allows the cooling tower to return colder water; that is, the tower's approach to the ambient wet bulb decreases. In the previous example of 450 tons [1580 kW], the same cooling tower would have resulted in an entering condenser-water temperature of 83.5°F [28.6°C] instead of the 85°F [29.4°C] with the smaller cooling tower. It is important to realize that the entering temperature for the tower would be approximately 97.6°F [36.4°C]. Therefore, the effect of reduced flow rate on chiller energy consumption is partially offset by the lower entering-condenser water temperature.

Same tower, larger chiller

One retrofit option that benefits many building owners is installing a new, larger chiller and using the existing cooling tower, condenser-water pump, and condenser-water pipes. In many cases, this allows the building owner to increase the chilled-water-system capacity for an expansion, with a limited budget. Table 9 shows the conditions for an existing 450-ton [1,580-kW] chiller replaced by a 675-ton [2,370-kW] chiller. This is a capacity increase of 50 percent. A more extensive discussion of this example is contained in the next section, *System Configurations.* It is important to select the new chiller based on the new conditions.

Table 9 Retrofit capacity changes

		Present	Expansion retrofit
Capacity, tons [kW refrigeration]		450 [1,580]	675 [2,370]
Cooling tower	Flow rate, gpm [l/s]	1350 [85.2]	1,350 [85.2]
	Entering temperature, °F [°C]	94.3 [34.6]	103 [39.4]
	Leaving temperature, °F [°C]	85 [29.4]	88 [31.1]
Ambient wet bulb, °F [°C]		78 [25.6]	78 [25.6]

Chilled-Water-System Options

Cost implications

Several considerations should be kept in mind when determining sizes for new systems. As pipe size is decreased, so are valve and specialty sizes and costs. Remember that reducing pipe size increases pressure drop. Keep a balance between first cost and operating costs. This can significantly reduce the system retrofit costs since existing pipes may be used.

By reducing either chilled- or condenser-water flow rates alone, the following installed-cost reductions are possible:

- Reduced pump size, valves, strainers, fittings, electrical connections
- In new systems, reduced pipe sizes
- In existing systems, more capacity from existing, chilled-water piping systems
- Reduced cooling-tower size, footprint, and fan power

Alternatively, a physically smaller cooling tower may be selected using low flow. A reduced footprint can benefit building owners in a number of ways:

- Reduced real estate requirements (often more important than realized)
- Reduced structural requirement, since the amount of tower water is reduced
- Reduced excavation and material costs in the case of a large, built-up tower with a concrete sump
- Improved aesthetics because of the reduced tower height

In addition to reducing installation costs, operating cost reductions for the whole system are also available. Due to a smaller pump and/or tower, the pump and tower operating costs can be reduced substantially with less adverse impact on the chiller operating cost. Analysis programs such as DOE 2.1, TRACE®, or System Analyzer™ software can be used to determine annual operating costs. Nordeen and Schwedler[6] showed that operating costs for chilled-water systems using absorption chillers can benefit greatly from reduced condenser-water flow. Figure 6 shows operating costs as generated with System Analyzer™ analysis software.

Chilled-Water-System Options

Figure 6 Annual system operating costs

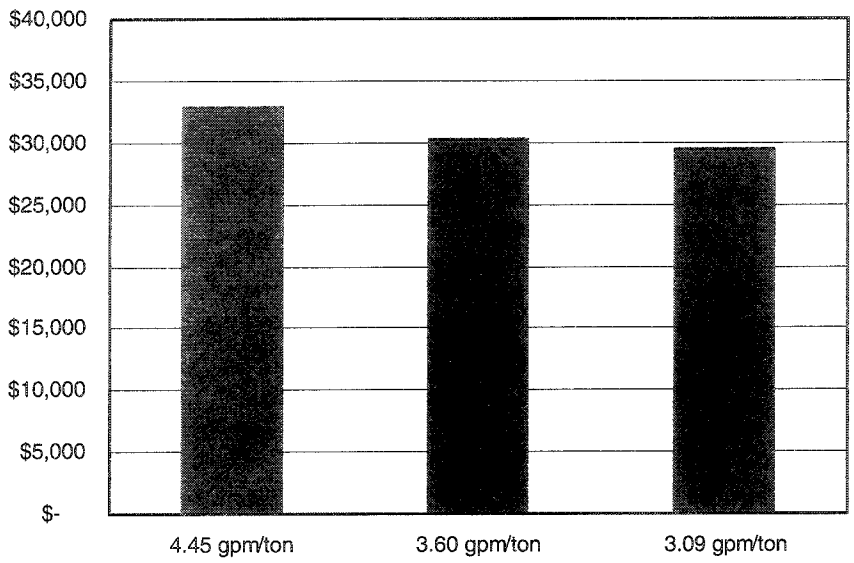

Kelly and Chan[5] compare the operational costs of chilled-water-system designs in site locations. Their summary states:

> In conclusion, there are times you can "have your cake and eat it too." In most cases, larger ΔT's and the associated lower flow rates will not only save installation cost but will usually save energy over the course of the year. This is especially true if a portion of the first cost savings is reinvested in more efficient chillers. With the same cost chillers, at worst, the annual operating cost with the lower flows will be about equal to "standard" flows but still at a lower first cost.

Chilled-Water-System Options

Misconceptions about low-flow rates

Some common misconceptions about low-flow systems include:

1. Low flow is only good for long piping runs
2. Low flow only works well for specific manufacturers' chillers
3. Low flow can only be applied to new chilled-water systems

Let's discuss each of these three misconceptions.

Misconception 1 — Low flow is only good for long piping runs.

One way to examine this claim is to use our previous example, but to concentrate on the condenser-water side. We'll start with the example covered on pages 16–18. Using the same chiller, but a smaller cooling tower and a more conservative zero condenser-water-pipe pressure drop, we can examine the effect of reducing flow rates.

Table 10 Reduced flow-rate effect

Condenser Water Pump	Base Case	Low Flow
Flow rate, gpm [lps]	1350 [85.2]	900 [56.8]
System pressure drop, ft water [kPa]	0	0
Condenser bundle pressure drop, ft water [kPa]	19.9 [59.5]	9.6 [28.7]
Tower static lift, ft water [kPa]	19.1 [57.1]	12.6 [37.7]
Pump power output, hp [kW]	17.7 [13.2]	6.7 [5.0]
Pump fan electrical input, kW	14.2	5.4

Chilled-Water-System Options

Figure 7 System energy comparison (no pipe)

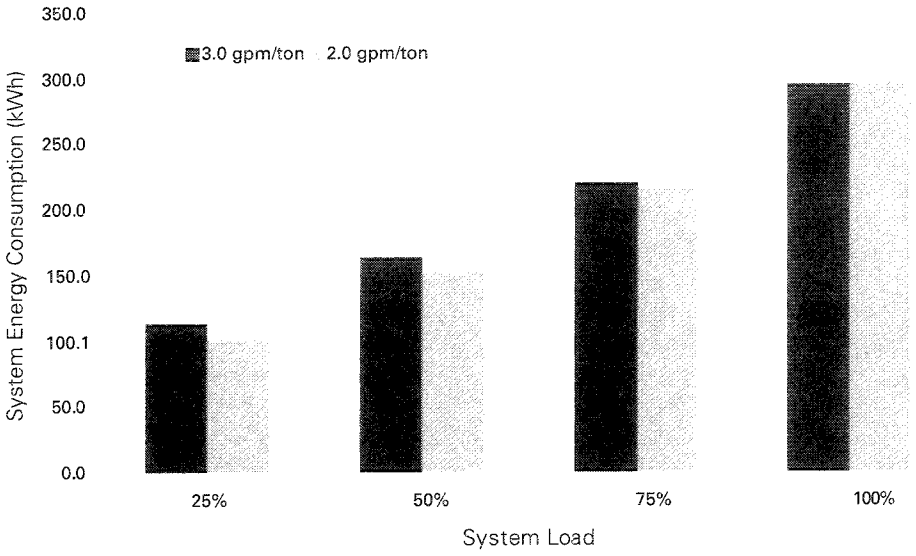

Energy consumption for the chiller plus condenser-water pump plus cooling-tower fans is shown in Figure 7. Note that only at full load does the total power of the chilled-water *plant* increase. Recall that this is with absolutely **no** pressure drop through the condenser-water piping, valves, or fittings. It is interesting to note that the break-even point at full load is approximately 8 feet of head (water) [23.9 kPa]. Also note that at all part-load conditions, the total power of the low-flow system is less than that of the base system. It is easy to see that even for short piping runs, reducing flow rates can improve plant energy consumption.

Misconception 2 — Low flow only works for specific manufacturers' chillers.

Demirchian, et al.[3], Eley[4], and Schwedler and Nordeen[6] independently showed that system energy consumption can be reduced by reducing flow rates. It is interesting to note that in the systems studied, three different chiller manufacturer's chillers were examined, yet the energy savings only varied from 2.0 to 6.5 percent. In all cases, regardless of which manufacturer's chillers were used, the system energy consumption was reduced. In addition, Demirchian, et al.[2], and Schwedler and Nordeen[6] also noted reduced first costs.

Chilled-Water-System Options

Misconception 3 — Low flow can only be applied to new chilled-water systems.

As previously discussed in the manual in the sub-sections *Coil response to decreased entering water temperature* and *Cooling tower options with low flow*, there are distinct opportunities to use existing infrastructure (pumps, pipes, coils, and cooling towers) to either expand available cooling capacity and/or reduce system energy costs by using lower flow rates.

Upon examination, it is clear that low-flow systems allow savings even on short piping runs, work with all manufacturers' chillers, and can be used in retrofit applications. As a designer, remember to review the benefits to the building owner. Often, reducing flow rates can provide significant value.

Chapter references

1 ARI Standard 550/590–1998, *Standard for Water Chilling Packages Using the Vapor Compression Cycle*, Air-Conditioning & Refrigeration Institute.

2 ARI Standard 560–1992, *Standard for Absorption Water Chiller and Water Heating Package*, Air-Conditioning & Refrigeration Institute.

3 Demirchian, G.H. PE and Maragareci, M.A. PE.: "The benefits of higher condenser-water ΔT at Logan International Airport central chilled-water plant." *IDEA 88th Annual Conference Proceedings,* 1997, pp. 291–300.

4 Eley, C.: "Energy analysis–replacement of chillers for buildings 43, 47, and 48."Eley Associates, CA, April 1997.

5 Kelly, D.W. and Chan, T.; "Optimizing chilled-water plants", *Heating/Piping/ Air Conditioning*, January 1999, pp. 145-7.

6 Schwedler, M., P.E. and Nordeen, A.; "Low flow works for absorbers too!" *Contracting Business*, November 1998, pp. 108-112.

System Configurations

Multiple-chiller systems are more common than single-chiller systems for the same reason that most commercial airplanes have more than one engine, the balance of reliability and cost. The most typical system configuration, by far, has two chillers. Since system loads can vary throughout a wide spectrum, multiple-chiller systems can often operate with one chiller. During these periods, if the system is designed properly, the energy required to operate a second chiller and its auxiliaries can be conserved.

Parallel chillers

Figure 8 shows a system with two chillers piped in parallel, using a single, chilled-water pump.

Figure 8 Parallel chillers with single, common chiller pump

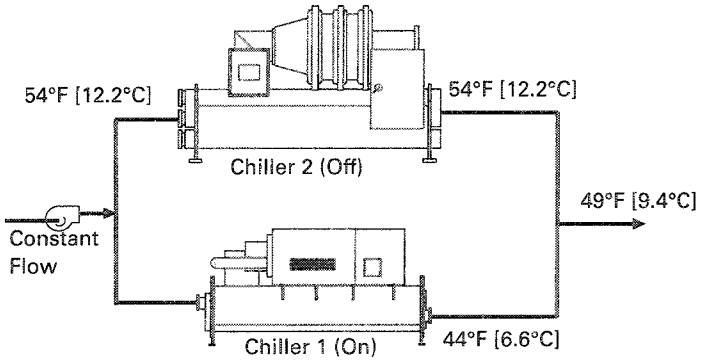

With constant flow loads, water flows in both chillers continually, whether the chiller is operating or not. Clearly, this can disrupt supply chilled-water temperature when only one chiller is operating. The temperatures indicated in Figure 8 show how the supply water temperature rises when one chiller is cycled off in response to a part-load condition. This may result in inadequate dehumidification capabilities or the inability to satisfy specific loads.

Alternatively, the running chiller can be reset to produce a lower supply temperature at this condition. In this way, the mixed system-supply-water temperature may be maintained at a more acceptable temperature. This complicates the control system and presents the possibility of increasing chiller energy consumption due to the requirement for lower temperature water. There will also be a low limit to this water temperature, dependent on the chiller's low pressure cut out control, low-evaporator-refrigerant-temperature limits, or low leaving-chilled-water limits.

System Configurations

Figure 9 Parallel chillers with separate, dedicated chiller pumps

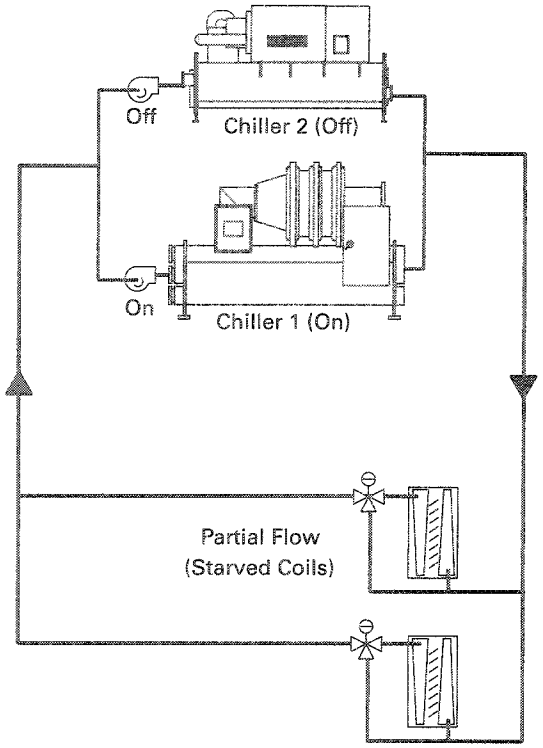

If separate, dedicated chiller pumps are used (Figure 9), a chiller–pump pair can be cycled together. This solves the flow mixing problem described above, but presents a new problem. With only one pump operating, total system water flow will decrease significantly, according to the pump–system curve relationship. All the load terminals in the system will receive less water, regardless of their need. Consequently, it is possible to starve some loads that are still high, perhaps those serving internal spaces with constant loads, or to starve the loads farthest from the pump.

System Configurations

Series chillers

If chillers are piped in series, as in Figure 10, the mixing problem disappears and the starving coils problem when one of the pumps is not running is resolved. Series flow presents a new set of temperature and flow control challenges.

Figure 10 Series chillers

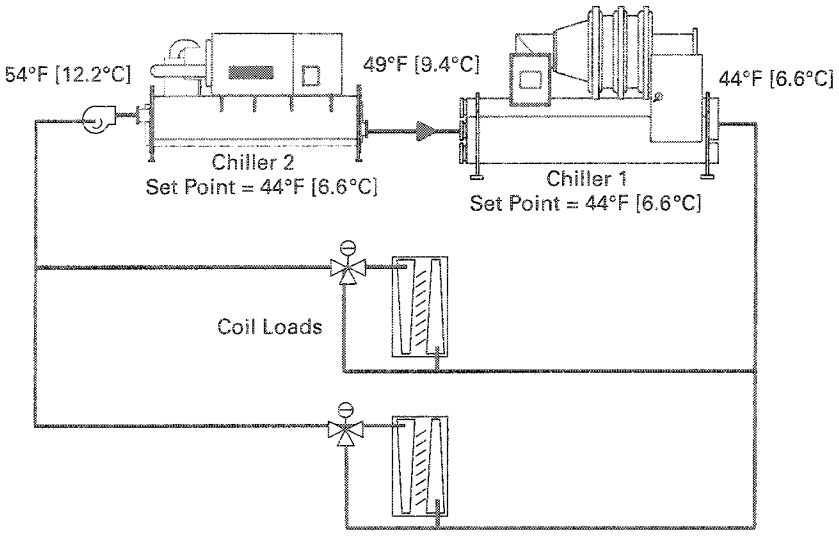

The flow rate through each chiller is the entire system flow, that is, double the individual flow rate of the parallel chillers (two chillers). This means that the chiller evaporator must accommodate the doubled water quantity. All things being equal, this results in fewer water passes and decreased chiller efficiency. However, this efficiency loss is more than offset by increased chiller efficiency since the upstream chiller operates at warmer temperatures. Also, pressure losses are additive when the chillers are piped in series. This may increase total system pressure loss significantly. On the other hand, series chillers may work very well in low-flow systems, where the system temperature difference is greater than 16°F [9°C], resulting in less pressure loss. Low-flow systems are discussed in detail beginning on page 16.

System Configurations

Temperature control can be executed in several ways. Figure 10 shows a strategy where the controller on each chiller is set at the system design set point. Either chiller can be used to meet the system demand for up to 50 percent of the system load. At system loads greater than 50 percent, the upstream chiller is preferentially loaded because it will attempt to produce the design leaving chilled-water temperature. Any portion of the load that remains is directed to the downstream chiller.

If chiller set points are staggered (upstream at 49°F [9.4°C] and downstream at 44°F [6.7°C]), the downstream chiller is loaded first. The upstream machine then meets any portion of the system load that the downstream chiller cannot meet. This control strategy offers several benefits. The first is that the upstream chiller is always operating at an elevated temperature. This allows it to operate at a higher efficiency. Also, placing an absorption chiller in the upstream position increases its capacity. As an example, an absorption chiller that can produce 500-tons [1,760-kW] at a leaving chilled-water temperature of 44°F [6.7°C] may produce 600-tons [2,110-kW] at 50°F [10°C]. Centrifugal, helical-rotary, reciprocating, and scroll chillers experience capacity and efficiency changes to a lesser degree. By judicious use of the series configuration, these benefits can provide reduced installed cost and fuel flexibility to the building owner.

Equal loading of the two chillers may be accomplished by using a chiller plant management system to reset the upstream chiller's set point in response to changes in system load.

System Configurations

Primary–secondary (decoupled) systems

The root cause of essentially all of the difficulties with parallel chiller control is the fixed relationship between chiller and system flow rates. If, instead, we can hydraulically decouple the production (chiller) piping from the distribution (load) piping, it is possible to control them separately. The fixed relationships are then broken apart.

System basics

Hydraulic decoupling

Figure 11 shows the basic decoupled system. This strategy is also referred to as a primary–secondary pumping arrangement. Separate pumps are dedicated to production and distribution. While the same water is pumped twice (by different pumps), there is no duplication of pumping energy. This is because the production pumps overcome only the chiller and production-side pressure drop while the distribution pumps overcome only the distribution system pressure drops.

Figure 11 Decoupled arrangement

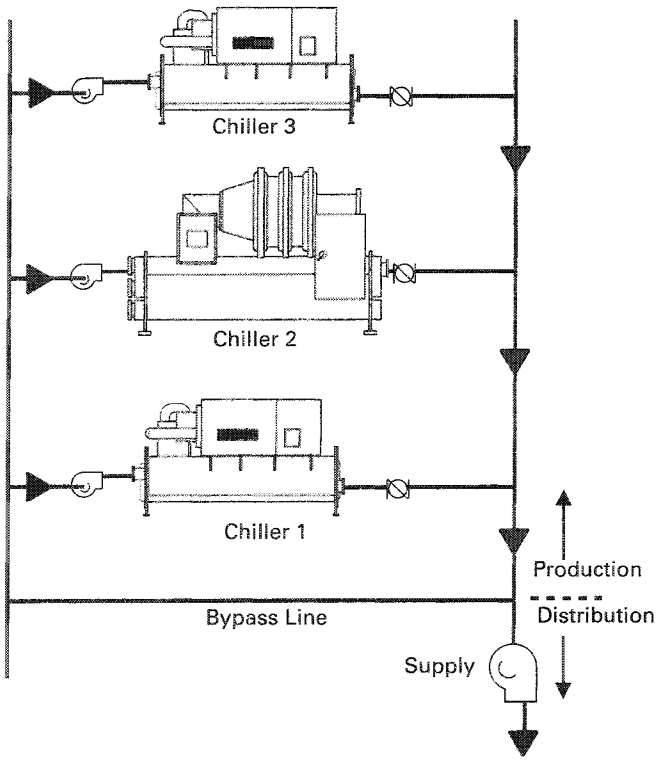

System Configurations

The unrestricted bypass line hydraulically decouples the production and distribution pumps so that they cannot operate in a series coupled pumping arrangement.

Although the two pumping systems are independent, they have three things in common:

- bypass piping,
- no-flow static head (from the building water column), and
- water.

Changes in flows or pressures, due to variations in dynamic head or the number of chillers operating, cannot cross the bypass line.

The extent of decoupling depends solely on the restriction (or lack of restriction) in the bypass pipe. Total decoupling is accomplished only if the bypass piping has zero pressure loss at any flow. Since this is not possible, some insignificant pump coupling will exist. The important issue is to keep the bypass piping free of unnecessary restrictions such as check valves. See *Check valve in the bypass line*, page 63, for further discussion.

Production

An individual production (chiller) pump need only pump water from the return bypass tee (point A in Figure 12), through its chiller, and into the tee at the supply-end of the bypass line (point B in Figure 12). This represents a relatively small pressure differential and a low pumping-power requirement. In addition, each individual pump operates only when its corresponding chiller runs.

Production loops are independent, one from another, as well as from the distribution loop. They may consist of pump–chiller pairs that act as independent chillers. Or, manifolded and stepped pumps can be teamed with automatic, two-position chiller valves to operate in the same way as pump–chiller pairs. Figure 12 shows the latter arrangement. Temperature control is also independent. The conventional, chilled-water temperature controller, furnished with the chiller, serves this function.

System Configurations

Figure 12 Production loop

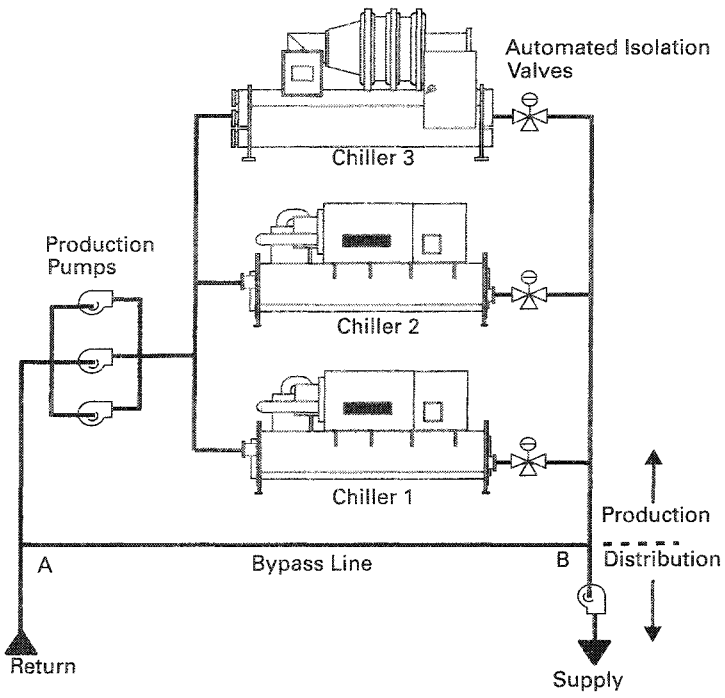

Chillers may be of any type, age, size, or manufacturer. System operation is simplest, however, if all of the chillers are designed to operate with the same leaving chilled-water temperature and through the same system temperature rise (temperature difference) across the chiller.

It is interesting to note that if the chillers in a decoupled system make the same chilled-water temperature, then all the operating chillers are loaded to equal *percentages*. There may be times when preferentially loading a chiller is desired. This is discussed in the section *Chilled-Water-System Variations*, page 54.

System Configurations

Distribution

Distribution pumps take water from the supply water tee (point B in Figure 12), push it through all the distribution piping and load terminals, and then on to the return water tee (point A in Figure 12). This pump can (and should) allow variable flow.

Figure 13 Distribution loop

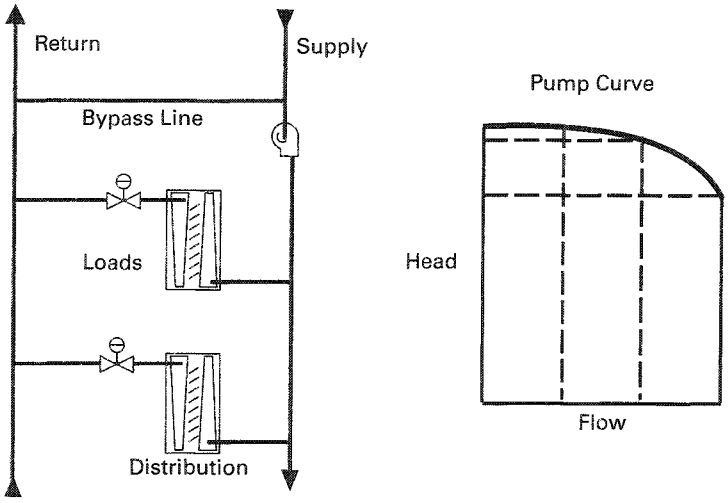

By itself, the distribution system is easy to understand. Figure 13 shows a simplified distribution system consisting of multiple cooling coils, each controlled by a valve that regulates the flow in its respective coil. In this case, the flow control valves should not be three-way because a constant flow is not desired. Instead, two-way modulating valves are used. As the aggregate loads change system flow, a constant speed pump would "ride" its flow-rate-versus-head-pressure. This means that in response to the change of flow required, the pump will find a new equilibrium point along its operating curve. An example pump curve is shown in Figure 13.

Alternatively, multiple pumps or variable-speed pumps can be used to limit the dynamic pumping head, similar to VAV fan control. Properly designed, part-load pumping power can approach the theoretical cubic relationship to flow, thus reducing energy consumption significantly. Today, most decoupled systems use a variable-speed drive on the distribution pump.

Distribution basics The distribution system benefits from the ability to accommodate load diversity, the fact that system flow is variable, and (in a properly operating system) the fact that return water is maintained at temperatures near design. The last assumption is further discussed in the subsection *Low ΔT syndrome*, page 63.

System Configurations

Load diversity Not all chilled-water loads peak simultaneously. Therefore, the quantity of water that flows at any one time is reduced from the "sum of the peaks" load that would be required in a constant-flow-distribution loop. This presents the possibility of reducing chiller, pump, and pipe sizes significantly.

Variable flow Only the water that the loads actually use is pumped. Most of the time, this means a significantly reduced flow rate, accompanied by an even more significant reduction in pumping energy.

Elevated return-water temperatures Because unused chilled-water does not bypass the cooling coils, all water that is returned accomplishes some cooling. Theoretically, the return-water temperature will always be at least as high as it is at full load. From a practical standpoint, this is not always possible, but it is closely approached in a properly operating system. In fact, at most part-load conditions, water returns from properly functioning air-conditioning coils at higher-than-design temperatures. In systems that use counterflow cooling coils, this occurs because the water leaving the coil tries to approach the temperature of the entering air stream.

Warm return water provides advantages in system design. It permits "preferential" loading of chillers, for example. Warmer return water is useful with all systems, but particularly so with heat recovery and free cooling applications. The section *Chilled-Water System Variations*, page 54 has further information.

Pumping Arrangements

Common

A variety of distribution system arrangements is possible. A single, large pumping station, as shown in Figure 12, can be used. The station may consist of single or multiplexed pumps sequenced.

Figure 14 Campus pumping arrangement

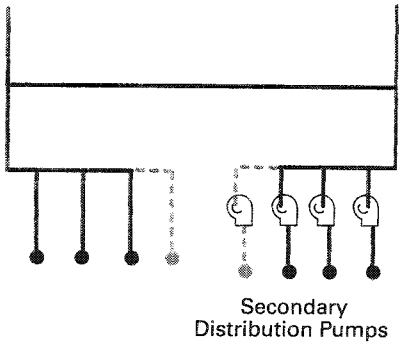

Campus

Alternatively, each of several secondary distribution systems can be piped in parallel. For example, Figure 14 shows separate distribution systems for each of three loads. Clearly, this arrangement lends itself to the possibility of plant expansion, by simply adding secondary distribution pumps to the existing plant.

Tertiary or distributed

Tertiary pumping is an extension of primary–secondary pumping when the distribution or secondary pump must overcome diverse and severe pumping requirements.

System loads can also be decoupled from the secondary distribution system. This is frequently done with very large systems. Figure 15 shows one method of providing "tertiary pumping" at the loads. A "load" may be something as large as an entire building, or as small as an individual cooling coil. When one or more loads have extreme head requirements the degree of rangability of the distribution pump is severely curtailed. Tertiary pumping allows the excess pumping requirements to be placed on a third pumping system thus shielding the distribution pump from divergent pressure requirements.

Most importantly, the loads must be controlled so that only the water needed to perform cooling is taken from the distribution loop. Water must not be allowed to flow into the return piping until it has sustained a specific temperature rise. Tertiary pumps can be either constant flow or variable flow, to best meet the terminal load requirements.

Pumping Arrangements

Figure 15 Tertiary pumping arrangement

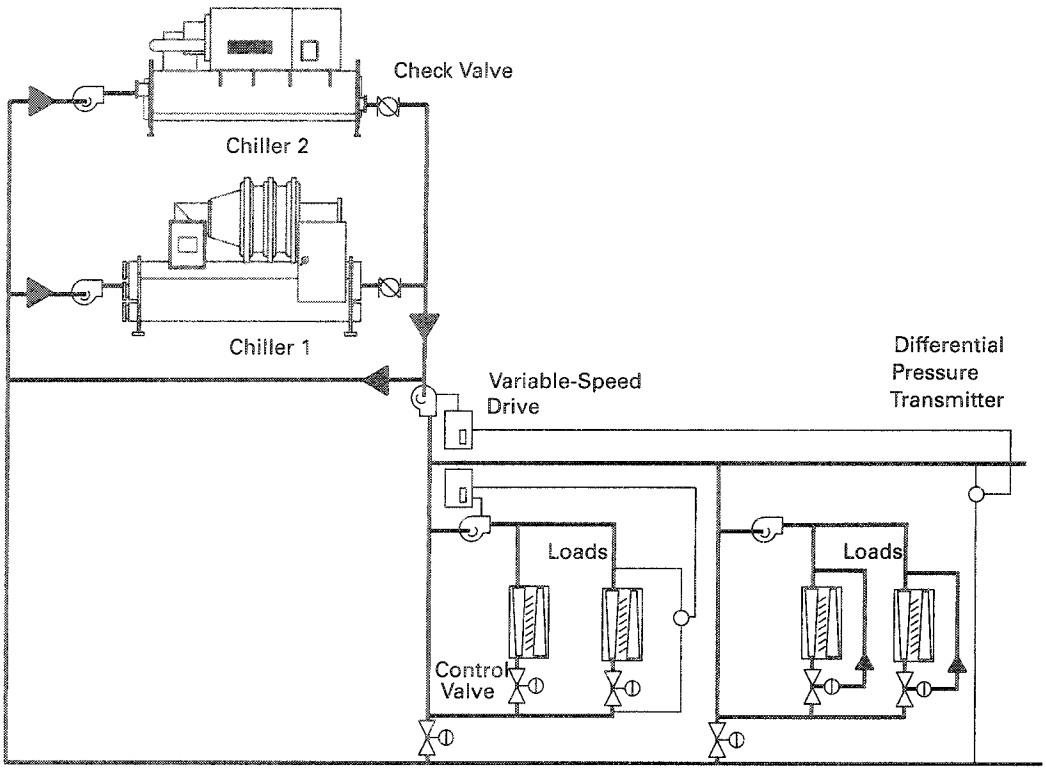

Decoupled system–principle of operation

Figure 16 Decoupled system supply tee

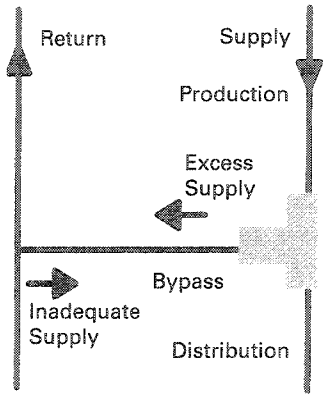

At the tee connecting the supply and bypass lines, a supply–demand relationship exists, as shown in Figure 16. Think of the total flow rate from all operating pump–chiller pairs as supply. Demand is the distribution system flow required to meet loads. Whenever supply and demand flows are unequal, water will flow into, or out of, the bypass line. Flow can be sensed directly or inferred from the bypass-water temperature.

Inadequate supply to meet demand causes return water to flow out of the bypass leg of the tee into the distribution system. The mixture of chiller supply and warm system return water, then, flows into the distribution loop. Supply-water temperature control is compromised when this happens. If the bypass line flow into the supply tee (Figure 16) can be sensed, its presence can be used to energize another pump–chiller pair. The increase in supply water flow from the additional pump changes the supply–demand relationship at the tee, eliminating return-water mixing. As long as return-water mixing does not occur at the supply tee, no additional chiller capacity is required. When mixing does occur, an additional chiller may be needed, depending on the amount of mixing that can be tolerated.

Pumping Arrangements

Much of the time supply exceeds demand, and the surplus flows to the return tee. If a chiller pump is stopped prematurely, the bypass line flow will again show a deficit and the pump will be cycled on again. The amount of surplus flow necessary depends on the size of the chiller to be shut off. The surplus flow must exceed a certain quantity before shutting off a chiller–pump pair. This is discussed in *Chiller sequencing*, page 39. If all chillers are equal in size, the surplus flow signal can be constant.

Control of the number of chillers is accomplished by simply noting the direction of flow in the bypass line. Thus, the system operates as a flow-based demand system, not a temperature-based demand system.

Flow-based control

To properly operate a primary–secondary system, an indication of direction of flow and the flow rate through the bypass line is necessary. This may be done either directly or indirectly. When bypass flow is from supply to return, it is called *surplus*. Bypass flow moving from return to supply is termed *deficit*.

Flow-sensing

Direct flow-sensing in the bypass line can be accomplished in several ways. A number of flow-metering technologies have been used successfully. These include Pitot tube, Venturi, orifice plate, differential pressure, turbine, impeller, vortex, magnetic, and ultrasonic transit-time. The accuracy, ease of installation, maintainability, and cost of meter technologies vary widely. To give accurate results a flow meter must be calibrated periodically, with some flow meters requiring more frequent calibration than others. When using flow-sensing devices, it is important to understand the range of flows a device can properly measure and its calibration requirements. The readings will only be as good as the instrumentation. Also note that many flow-measurement devices require several diameters of straight pipe for accurate readings.

Figure 17 Temperature-sensing

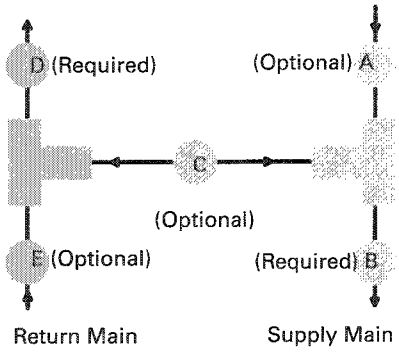

Temperature-sensing

Mixed water streams at the outlets of the supply and return water tees, Figure 17, can be used to indirectly determine the supply–demand relationship. Standard temperature-mixing equations can be used to determine the exact amount of surplus or deficit flow in the bypass line.

The five temperatures sensed — at points A, B, C, D, and E — are received by a programmable controller. (Some control systems use only two sensors, at points B and D, in conjunction with "pre-programmed" algebraic mixing equations.) Processing software applies the classic mixing equations and determines the resulting action to properly control the chilled-water system.

Pumping Arrangements

Note that sensor D needs to be very accurate, especially if there are many chillers, since small temperature changes may warrant chiller sequencing. Either temperature sensing strategy has a cost and flexibility advantage if a building or chiller-plant management system already exists, or is planned.

Chiller sequencing

Given the amount and direction of flow in the bypass line, chillers can be added or subtracted.

Adding a chiller

When there is deficit flow in the bypass line, the system is receiving water at a temperature above the system design temperature. (Also see the *Low ΔT syndrome* discussion, page 63.) At this point in time, a chiller and pump may be added. Many operators sense deficit flow for a particular amount of time (for example, 15 minutes) to ensure that the deficit flow is not a result of system transients. This reduces the chances of cycling a chiller; that is, turning on a chiller and then turning it off after a short time.

Subtracting a chiller

A chiller may be turned off when enough surplus water is flowing through the bypass line. How much is enough? Enough so that the chiller does not cycle on again in a short time period. Many system operators compare the amount of surplus flow with the flow rate of the chiller they are considering turning off. If this ratio is 110 to 115 percent, they turn the chiller off. Let's look at an example:

Chiller 1 can make 960 gpm [60.6 L/s] of 40°F [4.4°C] chilled-water, while Chiller 2 can make 1,440 gpm [90.8 L/s]. At present, there is 1,100 gpm [69.4 L/s] of surplus flow in the bypass line.

- The surplus bypass flow is presently 115 percent of Chiller 1's flow. If we turn Chiller 1 off, we will have 140 gpm [8.8 L/s] of surplus flow left.
- Note that the surplus bypass flow is presently only 76 percent of Chiller 2's flow. If we turn Chiller 2 off, we will have 340 gpm [21.5 L/s] of *deficit* flow. It is clear that we would have to cycle that chiller back on soon.

In this case, we could turn Chiller 1 off, but leave Chiller 2 on for the most efficient use of the chillers.

Variable-Primary-Flow Systems

Another method for balancing the production and distribution flows is to make them equal. Variable-flow systems require chillers that can operate properly when evaporator flow varies.

Conceptually, the variable-primary-flow (VPF) system resembles the familiar constant primary–variable secondary design more commonly known as the decoupled" system.[1] For example, both require a bypass. The bypass line for a VPF system is required to ensure that minimum flow through chillers can be maintained. Each chiller in the arrangement shown has a dedicated pump whose operation coincides with the chiller it serves.

Figure 18 Variable-primary-flow system

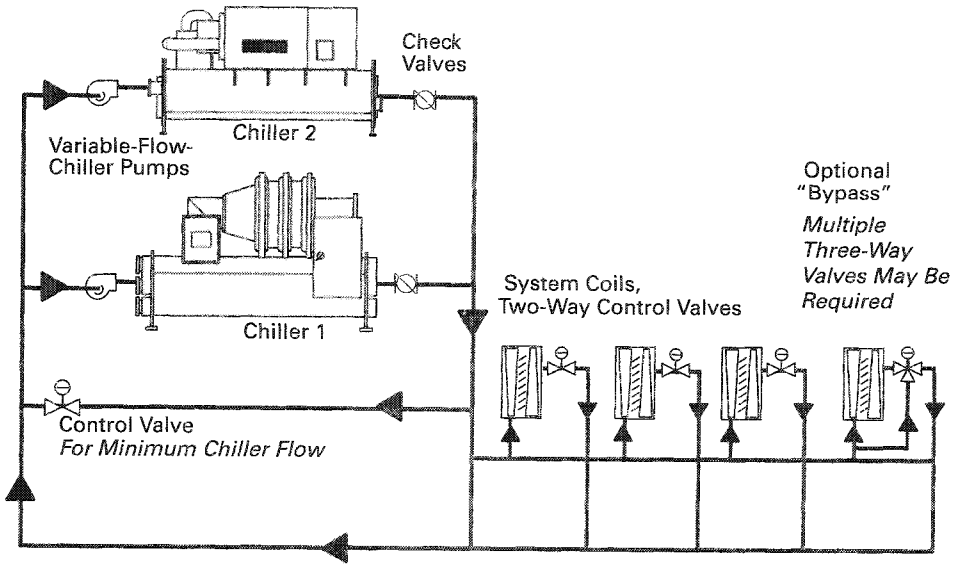

In a VPF system, **water flow varies throughout the entire system** — through the evaporator of each operating chiller as well as through the cooling coils.

Two-way control valves on coils, check (or isolation) valves on chillers, and a bypass pipe with a control valve are required to implement a VPF system. However:

- variable-flow chiller pumps eliminate the need for a separate distribution pump.
- the bypass can be positioned either upstream or downstream of the cooling coils.
- a control valve in the bypass ensures that the amount of flow through the operating chiller(s) never falls below the minimum limit.

Variable-Primary-Flow Systems

Dispelling A Common Misconception
True or false: "Chillers operate more efficiently in a system with variable rather than constant primary flow because of the greater log mean temperature difference (LMTD)."

It is true that the return water temperature in a properly operating VPF system remains constant as the amount of flow changes. It is also true that the LMTD can be increased by changing the production (primary) side of the chilled-water loop from constant to variable flow. But there are other facts to consider.

In a system with constant primary flow:
- Entering-evaporator temperature and LMTD fall as the cooling load diminishes.
- The convective heat transfer coefficient, like the primary flow, remains constant despite reductions in load.

In a system with variable primary flow:
- The convective heat transfer coefficient in the chiller evaporator decreases with a reduction in flow.
- Reduced flow decreases the overall heat-transfer effectiveness of the chiller evaporator.

The net effect is that the power consumption for a given chiller is virtually the same whether the chiller's evaporator flow is variable or constant.

VPF advantages

VPF systems present building owners with several cost-saving benefits that are directly related to the pumps. The most obvious cost savings result from eliminating the secondary distribution pump, which in turn avoids the material and labor expenses incurred with the associated piping connections, electrical service, and variable-frequency drive. Although the number of pumps is reduced, the sizes of both the pumps and the variable-frequency drives increase since the pumps must be sized to overcome the entire system's pressure drop. This offsets some of the installed cost savings due to fewer pumps.

Building owners often cite pump-related energy savings as the reason that prompted them to install a VPF system. With the help of a software analysis tool such as System Analyzer™, TRACE® 600, or DOE 2.1, you can determine whether the anticipated energy savings justify the use of variable-primary flow in a particular application.

It may be easier to apply a variable-primary-flow system rather than a primary–secondary system to an existing chilled-water plant. Unlike the primary–secondary design, the bypass can be positioned almost anywhere in the chilled-water loop and an additional pump is unnecessary.

VPF caveats

Sequencing chillers requires a thorough understanding of system dynamics since flow rates will vary through every operating chiller. The control strategy needed to avoid cycling, or restarting the chiller too soon, becomes complicated as the number of chillers or the capacities of the different chillers increases. The system designer must thoroughly define the control sequence early in the design process and clearly communicate it to the controls provider. Better yet, on such a system, a partnership among owner, operator, designer, and chiller plant provider (including controls) can be formed.

Controlling the flow rate fluctuation is critical. Confirm the allowable flow fluctuations with the chiller manufacturer and design the system so that the rate of flow change is never exceeded. Operators must understand how VPF systems work, therefore training is mandatory. The success of a system design is directly related to the operator's ability to carry out the design intent.

An important consideration when investigating variable-primary-flow systems is the fact that VPF systems take more time and planning than other systems to design and commission properly. If this time and planning can't, or won't, be invested, you will probably have better results with the use of systems other than VPF.

Variable-Primary-Flow Systems

Limits

Evaporator flow rates change as system demand changes. However, there are limits to absolute flow rate and allowable rate of change. Exceeding those limits may cause chiller-control instability or catastrophic failure.

Absolute flow limits

Maintain the evaporator flow between the minimum and maximum limits. Today, the cataloged water velocity range for many chillers is 3–11 fps [0.9–3.4 m/s], although some manufacturers now allow selections in the 1.5–2.0 fps [0.46–0.61 m/s] range. Ask the chiller manufacturer for the actual flow-rate-limit values (gpm [lps]) for your machine. The upper limit is generally set to avoid tube erosion problems, while the lower limit maintains control stability.

Rate of change

If a chiller's control system can not respond properly, the chiller might actually respond to rapid flow-rate changes by turning off or locking out on a safety trip. To ensure that chillers stay on line, keep changes in evaporator flow rate within manufacturer-set limits. This may require the use of slow-acting, modulating control valves at each chiller to reduce flow variation as chillers are sequenced, especially if pumps are manifolded.

Application note
While flow through a chiller's evaporator is now allowed to change, chillers with advanced controls may react by temporarily unloading. This results in an elevated leaving chilled-water temperature — generally only for a short time. For applications that require strict chilled-water temperature control, check with the chiller manufacturer for recommendations concerning the use of variable-evaporator flow.

As of this manual's writing, the most advanced chiller controls can provide close temperature control if flow fluctuations are limited to less than 10 percent of design chiller flow per minute. For some advanced controls, relaxing this limit to 30 percent of design flow per minute is permissible in most comfort-cooling applications since the leaving-evaporator water temperature will not deviate from set point for more than a few minutes, if at all. Again, check with the chiller manufacturer for base limits

Bypass flow control

Just as in a primary–secondary system, VPF systems respond to load changes by modulating flow. As the system demand nears the minimum flow rate for a single chiller, water must be bypassed to keep the flow rate through the chiller evaporator above that minimum.

Methods

- **Bypass line with valve** As previously discussed, bypass may either be controlled at a central location or be assured through the use of three way valves. When a bypass line and valve are used, the valve must be slow acting and modulate open when the flow rate nears the minimum of any chiller on line. When the flow rate rises above the chiller's minimum by a preset limit, the valve may close.
- **Three-way valve** An alternative is to provide three-way valves in distant portions of the system. The pump must be controlled so these valves always keep the total of their flow above the chiller's minimum. One method to ensure this flow rate is to control the pump to maintain a pressure differential at this valve, thus ensuring nearly constant flow at this point in the system.

Variable-Primary-Flow Systems

Evaporator flow measurement

Measurements of evaporator flow are critical to VPF control. One common practice relies on direct measurement using flow meters. (Be aware that some flow meters require, but seldom receive, frequent calibration.) Another measures water pressure drop through the evaporator bundle and estimates evaporator flow based on manufacturer data.

Bypass locations

A bypass is required whether the primary flow is constant or variable. In a primary–secondary system the decoupler allows excess primary water to be bypassed. In the VPF system the bypass allows system control to maintain the flows to chillers' minimum flow requirements.

There are three common locations for the VPF bypass line:

- Place the smaller bypass required for a VPF system in the same position as the bypass in a "decoupled" system. A variable-speed drive on the pump located near the chillers reduces flow and allows substantial energy and operating cost savings. One drawback is that the valve must work against higher pressures — possibly causing wear and lack of controllability.
- Use three-way valves at some of the system coils. While this approach ensures minimum chiller flow, it reduces the pump operating cost-savings due to increased the system flow and decreased return water temperature.
- Locate a bypass line and valve near the end of the piping run. The bypass control valve sees a lower operating pressure and stable control. Some operating cost savings may be sacrificed to maintain the pump-operating pressure at a higher level with the bypass located away from the chillers. The line sizes must be large enough to allow the minimum flow rate.

Chiller sequencing

Variable-primary-flow systems have more complex chiller sequencing requirements than primary–secondary systems. In fact, it is the time and thought put into chiller sequencing that will ultimately allow a VPF system to work well — or cause it to fail. System designers must think through the process, communicate the sequence of operation to those providing system-level programming and make sure the system operator understands the system function for it to have any chance to work.

Variable-Primary-Flow Systems

Adding a chiller in a VPF system

When the chiller(s) already on-line can no longer increase their flow rate—due either to the pump capacity or the maximum allowable evaporator-flow rate—or when chillers cannot meet the system-chilled-water set point, a chiller may be added. In a properly operating system the supply-water temperature is monitored. When the temperature exceeds the design setpoint by a certain amount (for example, 1.5°F [0.8°C]) for a set time (for example, 15 minutes) an additional chiller starts.

As chillers are brought on-line, flow rates may fluctuate substantially. This is especially true in a system with two chillers. An example will help explain the challenges.

Table 11 Flow-rate-fluctuation examples

	Design flow rate gpm [L/s]	Minimum flow rate gpm [L/s]	Maximum flow rate gpm [L/s]
Chiller 1	960 [60.6]	576 [36.3]	2,110 [133.1]
Chiller 2	1,440 [90.8]	675 [42.6]	2,474 [156.1]

At a point in time, Chiller 1 is active and has 1,100 gpm [69.4 L/s] flowing through its evaporator. It can no longer satisfy the required system supply temperature. What happens if Chiller 2's valve is opened with no other action taken? If we assume that pressure drops are equal, 550 gpm [34.7 L/s] will flow through each chiller. This means Chiller 1's flow rate drops by 50 percent instantaneously (probably beyond what its controls can respond to) and we are below each chiller's minimum flow rate. Be aware that this could become an issue since chiller controls may protect the chiller by shutting it off. The result is that some combination of pump speed, bypass valve control, and slow-acting valves at the chillers must do two things:

- Keep change in flow rate within the equipment limitations
- Keep each chiller's flow rate above its minimum

The bottom line is that control of VPF systems MUST be considered during system design.

Variable-Primary-Flow Systems

Subtracting a chiller in a VPF system

Subtracting a chiller in a VPF system is not simple, either. As an example, suppose that both chillers are running near their minimum flow. Chiller 1 is at 650 gpm [41.0 L/s] and Chiller 2 is at 760 gpm [47.9 L/s], so the system total is 1,410 gpm [88.9 L/s].

Choice 1

Turn off Chiller 1: It is obvious that we should be able to turn Chiller 1 off and satisfy system load as long as the flow rate doesn't increase too rapidly. However, the system flow rate is close to the Chiller 2's design flow rate, and if the system flow increases, we may need restart Chiller 1.

Choice 2

Turn off Chiller 2: If Chiller 1 has a condenser water temperature lower than design, its capacity has increased. Could we turn off Chiller 2? Chiller 1's flow is certainly within the allowable limits, but it may or may not be able to supply the required capacity. In this case, the dilemma is to ensure that there is enough chilled water capacity after a chiller is turned off.

Obviously, control is an extremely important aspect of a VPF system. In many chilled-water systems with between two and five chillers, system designers elect to use a primary–secondary system design to minimize control complexity.

"Overpumping" a chiller in a VPF system

Some VPF practitioners use manifolded pumps, allowing them to "overpump" a chiller. As used here, overpump means to pump more water through a chiller than was specified in the original design. In the previous example, Chiller 1 would be "overpumped" any time its evaporator water flow exceeds 960 gpm [60.6 L/s]; however, the flow rate must still be less than the maximum allowable. Recall that pressure drop through the evaporator will increase roughly with the square of the flow. There are two reasons one might want to overpump a chiller.

As the condenser water temperature is allowed to fall, the chiller could produce more cooling — if allowed. The only way to actually get that increased capacity is to increase either the flow rate or the temperature difference. The return water temperature is set, so now the only choices are to decrease the leaving water temperature or increase the flow. Changing water temperature complicates the system operation, but increasing water flow may be fairly simple in a VPF system. By increasing the evaporator flow rate, the chiller can provide more cooling.

Variable-Primary-Flow Systems

Some system operators overpump a chiller as a "band-aid" for systems experiencing low ΔT syndrome (see page 61). An example of low ΔT syndrome is receiving a depressed (e.g. 49°F [9.4°C]) return-water temperature rather than the design (e.g. 56°F [13.3°C]) return-water temperature. Again, the only methods to load the chiller are to decrease the chilled-water temperature or to increase the flow. If the pumping power and speed allows, the operator may be able to increase the chiller's flow rate and capacity. Do not exceed the pump's operating envelope.

Critical VPF system requirements

While they do have benefits, variable-primary-flow systems[1] should not be used on all systems. Understanding and accounting for the following prerequisites are critical for a successful VPF system.

- Chiller controls must adequately regulate temperature as flows vary
- System level controls must adequately regulate both temperature and flow as system demand varies
- Adequate time must be budgeted to design and program the system control sequence
- The system operator must understand the intended operation
- The system must include a means of assuring all chiller minimum-flow requirements, normally one of the bypass methods previously discussed.

VPF complicates all aspects of system design and operation. Consequently, there are many steps that must be taken to allow a VPF system to work well.

Chapter references

1 Schwedler, M., PE and Bradley, B.; "An Idea for Chilled-Water Plants Whose Time Has Come...Variable-Primary-Flow Systems", *Engineers Newsletter*, Volume 28, No. 3, The Trane Company, 1999.

Chilled-Water-Control Options

Chilled water reset — raising and lowering

Many chilled-water plants use chilled water reset, that is, changing the chiller's control setpoint, in an effort to reduce chiller energy consumption. As discussed in the first section *Chilled-Water Plant Basics*, page 3, raising chilled-water temperature reduces *chiller* energy consumption. In a constant-volume pumping system, this may reduce system energy consumption as long as humidity control is not lost. Humidity control may be lost if, as chilled-water temperature is increased, the air temperature leaving the coil increases to a point where it no longer performs adequate dehumidification.

In a variable-volume pumping system, however, raising the chilled-water temperature increases pump energy, often substantially, and typically increases total system energy. Before considering increased chilled-water temperature, the system operator should calculate the increased pumping energy and compare it with the chiller energy savings. It should be noted that ASHRAE/IESNA Standard 90.1–1999[1] requires chilled-water reset for constant-volume systems — with exceptions — but exempts variable-volume systems from this requirement for the reasons discussed.

An often overlooked method of decreasing *system* energy consumption is to *reduce* the chilled-water temperature, thereby decreasing pumping energy but increasing chiller energy. This strategy is possible with adequate chiller capacity and lift capability. Reducing chilled-water temperature may also improve dehumidification in the building. Another result of reducing the chilled-water temperature is increased chiller capacity during times when the condenser water temperature is cooler than design. This allows more time before another chiller and its ancillary equipment are started. This option is more fully discussed in *Low ΔT syndrome*, page 63.

Be aware that *any* change in chilled-water set point requires changes to be made to the system chiller-sequencing algorithms to ensure that system capacity is met. This added complication may not be warranted.

Chilled-Water-Control Options

Critical valve reset

Often, pumps are controlled to maintain a constant-pressure differential at a remote coil. Unless this coil serves the zone requiring the most cooling (the critical zone), the pump provides more pressure than necessary and consumes more power than necessary. Systems that have integrated air-side and chiller plant control systems and contain valves with direct digital controls present an opportunity for further pump operating-cost reduction. If a system is monitored to determine the critical valve at each point in time, the pump's operating pressure can be reset so that the critical zone's control valve is nearly open. Integrated control allows a system-level controller to determine the critical zone and reset the pump's set point dynamically, therefore reducing pump operating costs.

The controllers know the position of their individual valves, which modulate to maintain the required water flow through the coil. The building automation system continually monitors the valve controllers, looking for the most open valve. The controller resets the pump set point so that at least one valve, the one requiring the highest inlet pressure, is nearly wide open. The result is that the pump generates only enough pressure to get the required water flow through this "critical" valve, thus saving pumping energy.

Chapter references

1 *BSR/ASHRAE/IESNA 90.1–1999*, "Energy standard for buildings except low-rise residential buildings", Illuminating Engineering Society of North America and American Society of Heating, Refrigerating and Air-Conditioning Engineers, Inc., 1999.

Design Considerations

Chilled-water-pump configuration

Pumps may be either on the inlet or the outlet of the chiller, as long as the inlet of the pump experiences an adequate, positive suction pressure. In applications where there is a significant liquid column head (for example, a high-rise building), the pump is often located at the chiller's *outlet* so that the evaporator bundle is subject to the static head rather than the static-plus-dynamic (added by the pump) head. The need for high-pressure water boxes on the chiller can be eliminated.

An additional advantage of locating the pump upstream of the chiller is that if the pump motor rejects its heat to the water, the heat can be removed directly by the chiller. The chiller does not need to compensate for the pump heat by making colder water.

Pump per chiller

In either a primary–secondary or variable-primary-flow system, using one pump per chiller simplifies system hydraulics. The pump can be selected to produce the flow and pressure drop necessary for the specific chiller. Bringing additional pumps on changes system hydraulics, but only minimally. One drawback of such a system is a lack of redundancy, since the pump and chiller are dedicated to one another. This may be overcome by using a spare pump, pipes, and valves so that the spare pump could work with any chiller during emergency conditions.

Manifolded pumps

In an effort to resolve the redundancy consideration, some designers prefer to manifold pumps and provide $n+1$ pumps, where n is the number of chillers. Such an arrangement allows any pump to be used with any chiller. However, system hydraulics become more complicated. Unless all piping runs and evaporator pressure drops are equal, the amount of water flowing to each chiller will differ. As discussed with the variable-primary-flow system, manifolded pumps present a control challenge when chillers are sequenced.

Either pump configuration can be successful; one pump per chiller simplifies the hydraulics, while manifolded pumps allow redundancy.

Design Considerations

Bypass-line sizing

Bypass lines are required in both primary–secondary and variable-primary-flow systems. In a decoupled system, the bypass line should be sized for 110 to 115 percent of the largest chiller's design flow rate. In a VPF system, the bypass line should be sized for the largest chiller's minimum flow rate.

While minimal pressure loss is desirable, substantial water velocity can be accommodated without significant pressure loss in the relatively short length of bypass piping. The bypass line must be of sufficient length to prevent random mixing of the supply and return water streams; a minimum length of five to ten pipe diameters is recommended.

Amount of fluid in the loop

Two questions must be answered when determining how much fluid is necessary to maintain proper chilled-water-system control.

- How fast can the specific chiller respond to changing conditions?
- How fast can the system respond to changing conditions?

The amount of fluid the loop requires to operate properly is related to the larger of these two answers. Note that both answers describe an amount of time.

Required Volume = Flow Rate x Loop Time

Where:

- Required Volume = the amount of fluid in the coil, pipes, evaporator barrel, storage tank, etc., in gallons [liters]
- Flow Rate = the system flow rate, in gpm [lps]
- Loop Time = the time it takes for fluid to leave the chiller, move through the system and return to the chiller, *and allow for stable system operation*, in minutes [seconds]

Design Considerations

Chiller response to changing conditions

Follow the manufacturer's advice for the specific chiller being considered. This determines the absolute minimum amount of water the loop requires. However, this is the chiller minimum, not the system minimum, as discussed in the next section. Many of today's chillers have controls that respond quickly to changing conditions. Some chillers can react to a change in return water temperature in one minute; other chillers may require five or more minutes to react. The response varies, depending on chiller type and design.

System response to changing conditions

It is important to understand that even if a chiller can respond to rapidly changing conditions, the interaction between the chiller, system pumps, and control valves may define the minimum loop time. These components may "hunt" if the system conditions change too rapidly. Review these interactions to ensure that system control will be stable.

Example:
A specific chiller requires at least two minutes of water in the loop to operate properly. However, after considering the system interaction, it's decided that a five-minute loop time will work best. The system flow rate is 960 gpm [60.6 lps].

Required Volume (R.V.) = 960 gpm x 5 minutes = 4,800 gallons
[R.V. = 60 lps x 5 minutes x (60 seconds/1 minute) = 18,180 liters]

If the volume of fluid in the evaporator bundle, piping, and coils is less than the required volume, a tank should be added to increase loop volume. For optimal stability, the tank should be placed in the return water position and be designed to *mix* the returning-water stream with the water currently in the tank.

Plant expansion

Plant expansion can be performed easily in either a primary–secondary or variable-primary-flow system by adding another chiller and pump to the system. The two major considerations will be whether the chilled-water distribution pipes will be able to handle the flow and how to install the new chiller while other chillers are still providing cooling. When the new system flow rate complies with good piping practice and the pumps can deliver the water, the process works well. To maintain chilled-water flow during installation of a new chiller, some plants are constructed with piping stubs in place for the new chiller. In this way, the new chiller can be installed while the system is still operating, then the valves in the stubs can be opened.

Design Considerations

When decoupled systems are used on large campus-type systems, added loads are often located some distance away from the original loads. Yet, planners like the idea of somehow hooking the new loads to the existing system. The double-ended system shown in Figure 19 is one way of handling this requirement. A second production facility is placed at a convenient location in the new part of the campus. Its distribution plant is laid out as a mirror image of the original piping, and connects to it at the ends of each system.

This way, either production loop can feed into the now common distribution loop. The point of no-flow simply floats as the two production plants are loaded. If, at very low seasonal loads, the operators want to secure one entire production loop, it is not a problem if the on-line plant has adequate production and distribution capacity. With full-time plants, this tactic can be used to reduce operating expenses significantly for many weeks of the year. Further, it permits preferential loading of the newer, more efficient machinery.

Design Considerations

Figure 19 Double-ended decoupled system

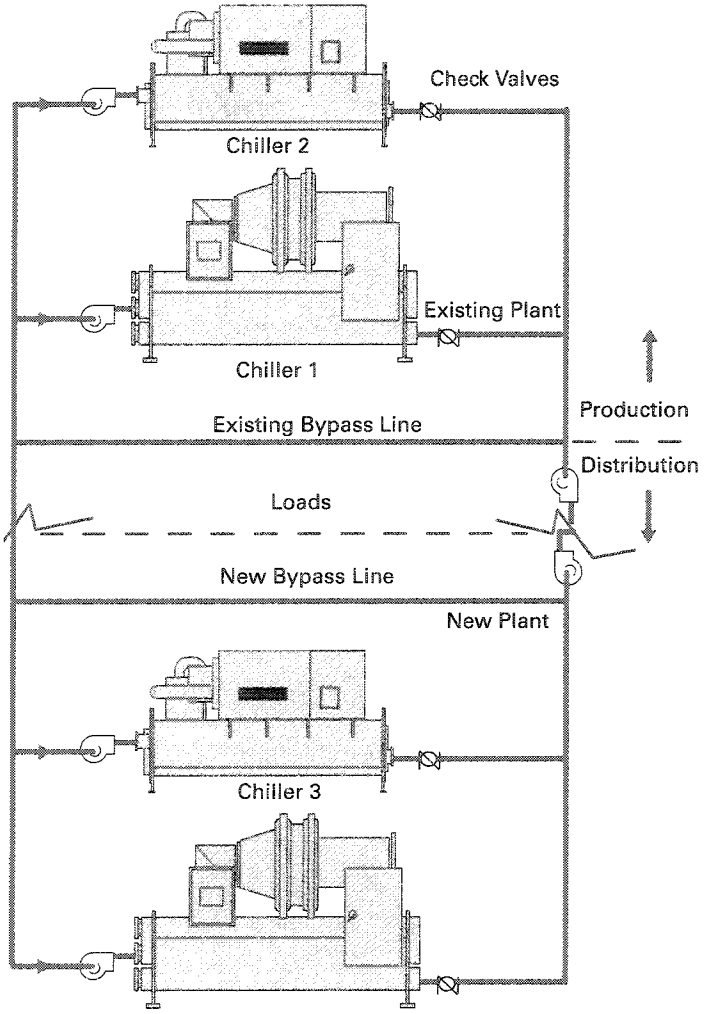

Chilled-Water System Variations

A number of chilled-water system variations can and should be used when appropriate. Each configuration offers specific advantages to solve problems and add value to the system.

Heat recovery

ASHRAE/IESNA Standard 90.1–1999[1] now requires heat recovery in specific applications. Indoor air quality concerns have spurred the use of systems that subcool supply air to dehumidify, then temper, the air to satisfy space conditions. ASHRAE/IESNA Standard 90.1–1999 also limits the amount of new reheat energy used in these applications. With these drivers, and energy costs, there has been a resurgence of heat recovery chillers. The example on page 58 describes a cost-effective recovered-heat scheme. This scheme is commonly used for service-water heating in resort hotels and for certain process loads.

Preferential loading

Preferential loading is desirable for systems that use heat recovery since the heat recovery chiller may remain more fully loaded, thus producing more heat that can be recovered for the desired process. Preferential loading may also be beneficial for use with either a high-efficiency chiller that should be fully loaded whenever possible, or a chiller using a fuel other than electricity, such as an absorption chiller using waste steam from a cogeneration plant or a chiller coupled with an engine that generates electricity. When used with the latter, the system is able to preferentially load the alternate fuel chiller when the cost of electricity is high.

Chilled-Water System Variations

Parallel arrangement

If a chiller, in a decoupled system, is moved to the distribution side of the bypass line, system hydraulics, and temperatures, the chiller is preferentially loaded when it is turned on. As shown in Figure 20, Chiller 1 always sees the warmest system water and is preferentially loaded. As previously discussed, chillers on the production side of the bypass line (Chillers 2 and 3) will be loaded to equal percentages.

Figure 20 Parallel preferential loading arrangement

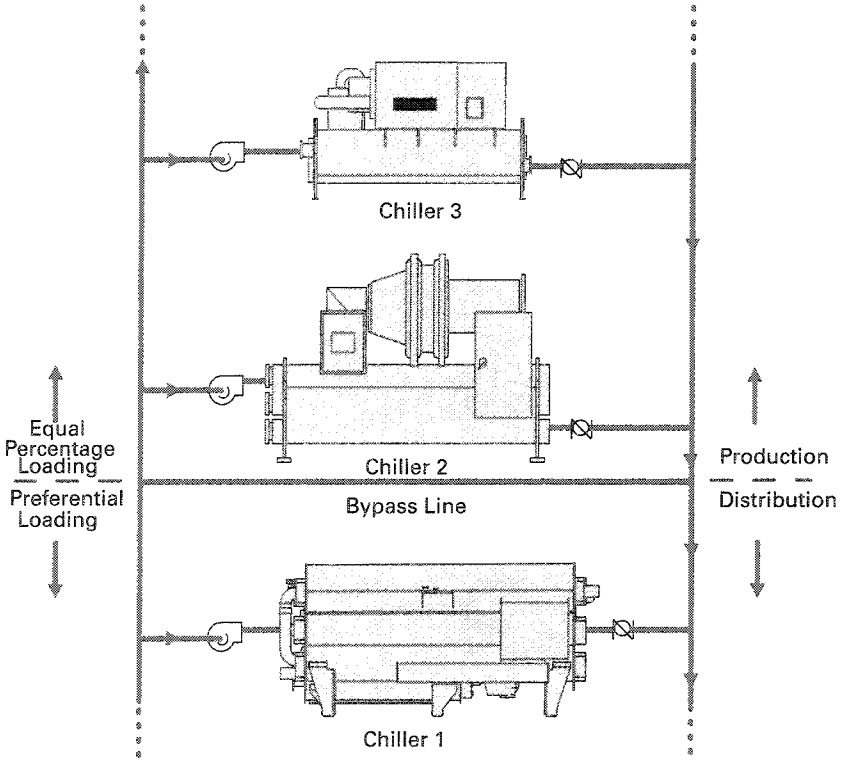

One caveat when applying this arrangement is that chillers on the production side of the bypass line will run more often at low part-load conditions. Older chillers or newer chillers that have a high cycle point may not have this capability.

Chilled-Water System Variations

Sidestream arrangement

Figure 21 Sidestream preferential loading arrangement

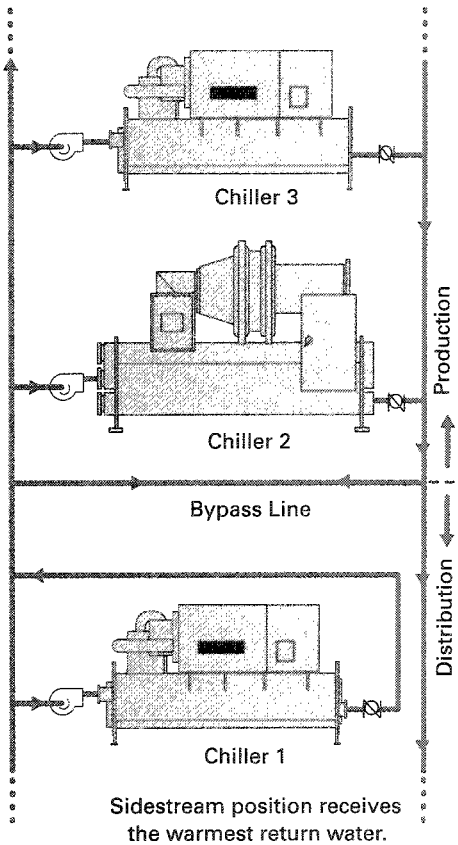

Figure 21 shows a simple modification to the traditional decoupled arrangement. The sidestream arrangement assures that the chiller piped in the sidestream position receives the warmest entering-water temperature and can fully load it whenever the chiller plant operates.

This arrangement is unique because it not only allows preferential loading, but it also permits the cooling device (chiller, heat exchanger, etc.) in the sidestream position to operate at any temperature change. This configuration precools the system-return water for the chillers downstream, reduces their loads and energy consumption, and decreases the overall operating cost of the chilled-water plant.

When cooling devices are located in the return piping of the distribution loop, they do not contribute to system demands for flow. They simply reduce the temperature of return water to the production loop. While this is counter-productive to the principle of striving for the highest possible return water temperature, it is often the best way to obtain free cooling, specialized heat recovery, or reducing the capital cost of ice storage equipment.

Sidestream, decoupled applications are usually most economical when the sidestream chiller is smaller than those on the production side of the bypass line. Since pumping requirements and energy consumption change with modifications to the system arrangement, it is best to use a computerized analysis tool to model the economic effects.

Following are three different system configurations that can benefit from the sidestream application.

Chilled-Water System Variations

Figure 22 Plate-and-frame heat exchanger

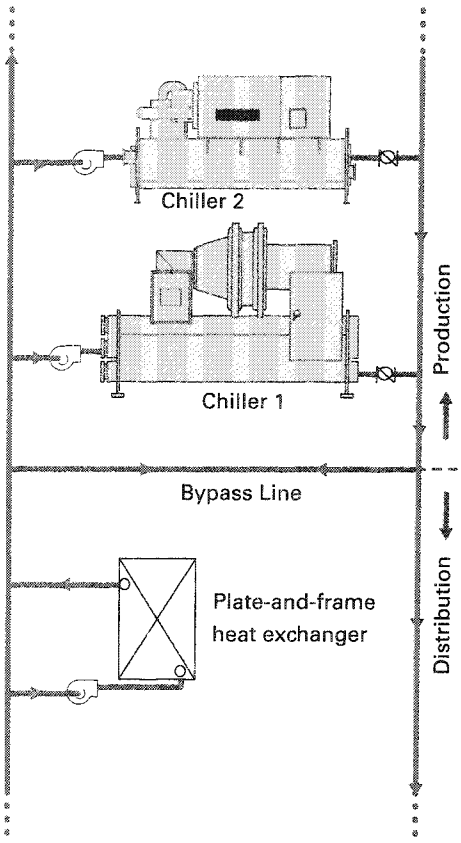

Plate-and-frame heat exchanger

A free-cooling heat exchanger[8] may be capable of chilling water to only 48°F [8.9°C] during some periods. Rather than overlook this portion of cooling capacity assistance, the heat exchanger does whatever it can to its portion of the total return stream. Chillers operating downstream can reduce chiller-water temperature further, allowing simultaneous free cooling and mechanical cooling. This configuration increases the hours that the heat exchanger may be used. Since this capacity is brought to bear on the warmest water in the system, it has the greatest impact.

Heat recovery

A similar situation occurs if a heat-recovery chiller is placed in this sidestream position[5] (see Figure 22). This chiller may be equipped with a heat recovery condenser or it could be a standard, single-condenser chiller operating as a heat pump. The chiller may not be capable of cooling water to the system supply temperature. That is unimportant with this configuration. Think of the machine as a heater instead of a chiller. Its primary function is heating, and cooling is a beneficial by-product. The passing return-chilled-water stream appears as an infinite heat source to the heat recovery chiller. The chiller only cools its evaporator water enough to satisfy the heating demand. This avoids the control predicament of deciding how to reject surplus condenser heat when the cooling and heating loads of a chiller do not strike a perfect heat balance.

Optional fuels

An absorption chiller may be applied in a sidestream location. This allows the chiller to be loaded whenever utility rates make it beneficial. It also ensures the absorption water chiller the warmest entering-water temperature, allowing it to operate more efficiently and produce more cooling.

System control

The flexibility of sidestream applications is increased by the fact that the devices are used to precool return water, not to produce the system chilled-water temperature. This means that they may be loaded by a different signal. In the case of a plate-and-frame heat exchanger, as long as return water is being cooled, there is an advantage to using it. A heat-recovery chiller can be loaded to produce just the amount of hot water necessary using the condenser-water leaving temperature as a signal. If preferential loading is used with an absorption chiller, it may be loaded simply by decreasing its leaving-water temperature.

Chilled-Water System Variations

Unequal chiller sizing

Many designers seem to default to using the same capacity chillers within a chilled-water plant.[2,3] There are benefits to sizing chillers to meet the system loads. One is that when a chiller is brought on line, so is its ancillary equipment, thus increasing *system* energy consumption. In general, the smaller the chiller, the smaller the ancillary equipment. Another is to ensure that chillers are efficiently loaded. Many times this can be accomplished by using chillers that do not have the same capacity. Examine the use of 60/40 splits (one chiller at 60 percentage system capacity, the other at 40 percent) or1/3–2/3 splits (one chiller at 1/3 of system capacity the other at 2/3). The benefit is that the system load can be more closely matched with the total chiller capacity, increasing total system efficiency.

Series–counterflow application

The series–counterflow configuration can work with all types of chillers. Duplex chillers are shown in Figure 23. A single large chiller may be built as a duplex machine. The evaporator and condenser water circuits are common to both *halves* of the duplex. Increased efficiency comes from the separation of the compressors and refrigerant circuits. Thus, each *half* is redundant for increased system reliability.

Another system configuration that can be very energy efficient incorporates the previously described series application, but does so for both the chilled water *and* condenser water. Figure 23 shows such a configuration.

Note that the downstream machine, in this case, produces 40°F [4.4°C] chilled water, while the upstream machine produces 50°F [10°C] chilled water. The downstream machine receives 85°F [29.4°C] condenser water, while the upstream machine receives 95°F [35°C] condenser water. Therefore, the pumping requirements are only 1.2 gpm/ton on the chilled water side and 1.5 gpm/ton on the condenser water side — greatly reducing pumping costs.

The configuration has the effect of equalizing each chiller's required lift, as shown in Figure 23a. The chilled- and condenser-water flow directions are opposite, or counter, to one another. Thus the name, series-counterflow.

Chilled-Water System Variations

Figure 23 Series–counterflow arrangement

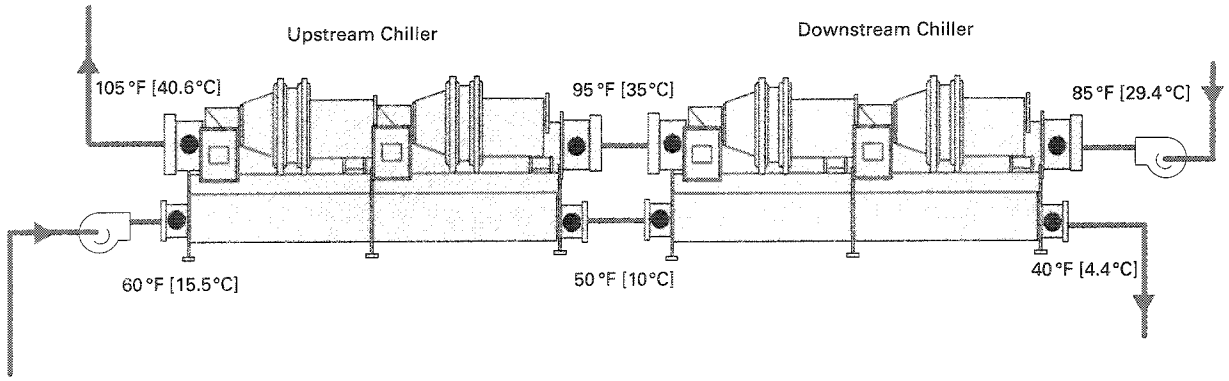

Figure 23a Equal lift concept

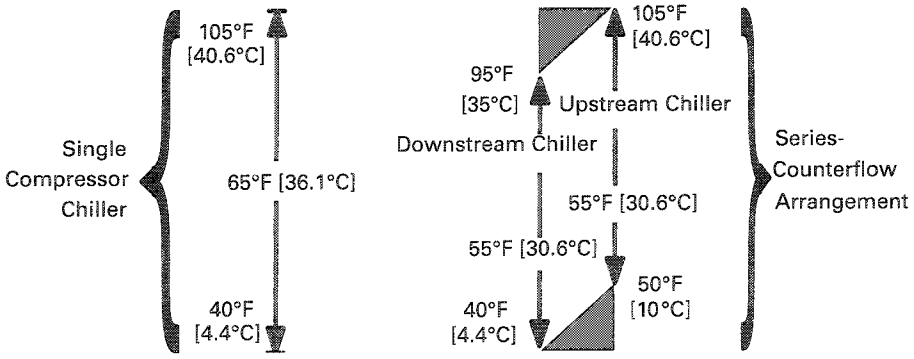

Chilled-Water System Variations

Applications outside the chiller's range

Designers may wish to use chillers to provide cooling for which the flow rate or temperature requirements are not within the ranges of a particular chiller, even though the chiller has adequate capacity. This often occurs with manufacturing processes. Let's look at two examples showing *system* designs that can satisfy the desired conditions.

Flow rate out of range

A plastic injection molding process requires 80 gpm [5.1 lps] of 50°F [10°C] water and returns that water at 60°F [15.6°C]. The selected chiller can operate at these temperatures, but has a minimum flow rate of 120 gpm [7.6 lps]. The following system in Figure 24 can satisfy the process. Decoupling the chiller from the process load allows the water flow to be different, ensuring that the flow through the chiller is within acceptable limits. With a single chiller system, one pump and a three-way valve gives the same results.

Figure 24 Flow rate out of range for equipment

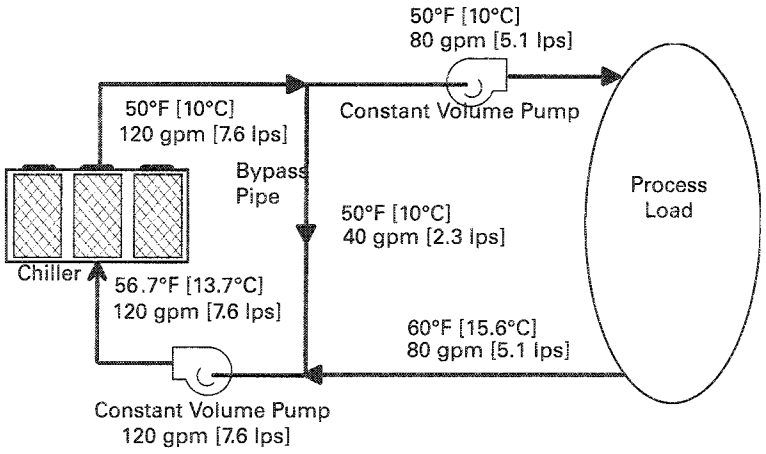

Chilled-Water System Variations

Temperatures out of range

A laboratory load requires 120 gpm [7.6 lps] of water entering the process at 85°F [29.4°C] and returning at 95°F [35°C]. The accuracy required is more precise than the cooling tower can provide. The selected chiller has adequate capacity, but a maximum leaving-chilled-water temperature of 60°F [15.6°C].

Using a pair of bypass pipes allows the mixing valve to supply the proper temperature to the process load and maintains acceptable water flow rates and temperatures through the chiller. In the example shown in Figure 25, the chiller and process flow rates are equal, although this is not a requirement. For example, if the chiller had a higher flow rate, more water would bypass and mix with the warm return water.

Figure 25 Temperatures out of range for equipment

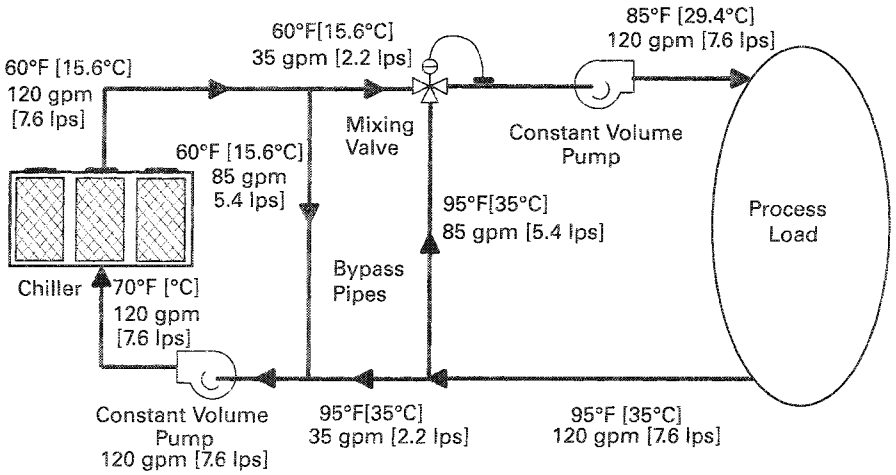

An example of a process application layout where the required temperature control tolerance is more precise than the chiller controls allow is shown in the Figure 26.

For example, when Chiller 2 is turned on, it takes a certain amount of time to reach its supply-temperature setpoint. The dedicated control valve remains closed and water is bypassed until Chiller 2 reaches its setpoint, which keeps the water temperature supplied to the process within tolerance. When Chiller 2 reaches its setpoint, the control valve opens.

This design requires a different chiller-sequencing strategy than the standard decoupled system. Water must not be allowed to bypass from the return side to the supply side, since this will cause the temperature of the water supplied to the process to vary outside the tolerance. Set the system controls to turn on Chiller 2 before deficit flow occurs.

Chilled-Water System Variations

Figure 26 Precise temperature control, multiple chillers

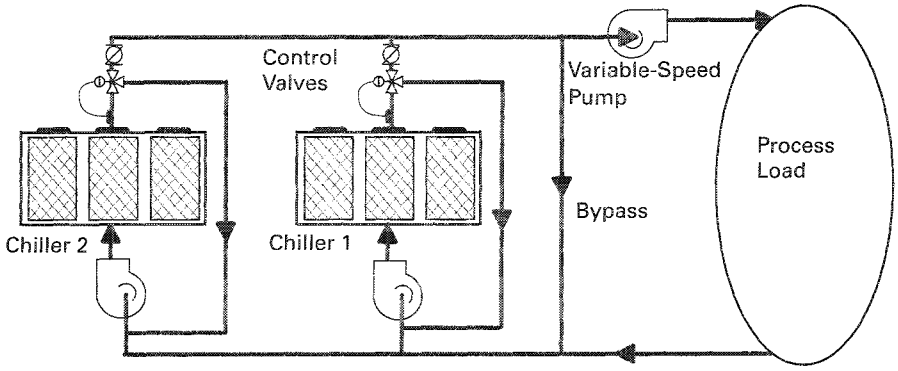

Chapter references

1 *BSR/ASHRAE/IESNA 90.1–1999*, "Energy standard for buildings except low-rise residential buildings," Illuminating Engineering Society of North America and American Society of Heating, Refrigerating and Air-Conditioning Engineers, Inc., 1999.

2 Eppelheimer, D., P.E. and Bradley, B.; "Chilled-Water Plants and...Asymmetry as a Basis of Design", *Engineers Newsletter*, Volume 28, No. 4, The Trane Company, October 1999.

3 Landman, W. and Bradley, B.; "Off-Design Chiller Performance", *Engineers Newsletter*, Volume 25, No. 5, The Trane Company, December 1996.

4 Trane Applications Engineering Group, "A New Era of Free Cooling", *Engineers Newsletter*, Volume 20, No. 3, The Trane Company, 1991.

5 Trane Applications Engineering Group, "Two Good Old Ideas Combine to Form One New Great Idea", *Engineers Newsletter*, Volume 20, No. 1, The Trane Company, 1991.

Chilled-Water System Issues

Low ΔT syndrome

During the past several years the "low ΔT syndrome" debate has raged.[1,3] The symptom of the problem is that, in large systems, return-water temperature is too low, thus not allowing the chillers to fully load. Many system operators simply turn on more chillers to satisfy flow requirements. Some system designers advocate putting a check valve in the bypass line—thus putting chilled-water primary and secondary pumps in series and varying the flow through chiller evaporators. Other designers install primary pumps that are larger than necessary and "overpump" chillers at part-load conditions. These solutions are all "band-aids" and do not treat the source of the problem.

Coad[2] points to the fact that a properly operating hydraulic system will work as designed and explains the fallacies in the check valve and overpumping approaches. Taylor[5] recommends that a number of mitigating procedures be implemented to eliminate the problem. They include:

- Eliminate three-way valves
- Ensure that airside control is not causing the problem
- Properly maintain the system, including regular air filter changes, coil cleaning, control calibration, and proper setpoints

Before applying band-aid approaches to "fix" symptoms such as low ΔT syndrome, ensure that the system is operating properly using some or all of the procedures Taylor[5] discusses. In addition to these procedures, simply reducing the chilled-water supply temperature will have the effect of raising the system return-water temperature in systems using two-way valves.

Check valve in the bypass line

Some designers recommend the installation of a check valve in the bypass line of a primary–secondary system to eliminate the possibility of deficit flow in the bypass line. The premise is that if there is a system problem (low temperature differential), the check valve will put the primary and secondary pumps in series and pump more water through the chiller, thus balancing the primary and secondary flow requirements. This is not universally accepted. Coad[2] states,

> One constraint is that if the system is designed as variable flow and is experiencing operating problems related to low return water temperatures, the solution is *not* in the plant but rather in the load.
>
> **and**

Chilled-Water System Issues

> One solution that has been suggested is to install a check valve in the plant common pipe or decoupling line circuit ... However, to be realistic, all that the check valve can do is assure that no water bypasses the chillers, which in turn has the effect of increasing flow in the chiller. Thus with the installation of the check valve must be an algorithm to either slow down system pump(s) when flow increases beyond the design maximum for the on chiller or turn on additional chillers. Thus the check valve solution offers its own problems and many designers feel very uncomfortable with forcing pumps into series operation without the benefit of understanding the full impact thereof.

This manual does *not* recommend the use of check valves in the bypass line.

Failure recovery

Figure 27 Failure recovery

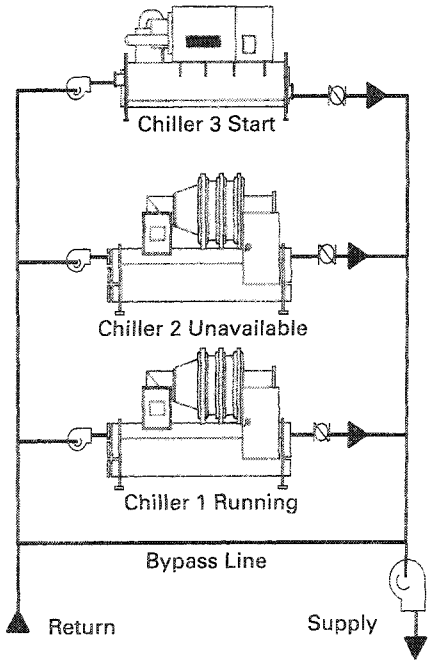

With all the varied approaches available to potential customers, it sometimes seems that the main idea gets lost. People purchase chilled-water plants to reliably produce chilled water to satisfy another need, such as comfort or process cooling. Therefore when the plant operates there must be a process in place to recover from the failure of a chilled- or condenser-water pump, cooling tower, or chiller. Failure recovery should be integral to the chilled-water plant control system. Refer to Figure 27. If the control sequence tries to start Chiller 2 and its pump, but the pump has an electrical malfunction, the sequence should immediately lock out Chiller 2 and its pump. The control system should then attempt to start Chiller 3 and its pump. At the same time, the control system should send a pump malfunction alarm to the system operator.

Alternative energy sources

Energy source redundancy is receiving increased attention due to rate variations and reliability issues brought about by the deregulation of electrical utilities across the country. There are two basic approaches to meet these issues:

- Provide an alternate source of internally-generated electricity to serve a system in the event of general failure or an unacceptably high temporary cost of electricity (time-of-day rates).
- Provide an alternate source of chilled-water producing capability, possibly fueled by natural gas, another fossil fuel, or even using low cost electricity as an alternative energy source.

Chilled-Water System Issues

Electricity generation

The design, construction, and operation of full-capacity, electrical-generation systems is well understood. The electrical-generation capacity can be sized to allow an entire facility to operate or it can be sized for an emergency situation. Electrical generation can be outsourced to avoid internal capitalization.

A variation of electrical generation uses an engine indirectly- or directly-coupled to a chiller. Either variation produces chilled water using an alternative fuel such as natural gas or fuel oil. The indirect-coupling method allows the chiller to operate using an alternative fuel or electricity from the grid. An engine directly-coupled to a chiller can only run using the alternative fuel.

Alternative fuel

Some designers prefer to employ chillers that use fossil fuels. Examples are absorption chillers using natural gas, steam, or hot water. Plants with these chillers, discussed in detail elsewhere[4], allow the owner to take advantage of permanently expected fuel rate separations.

Thermal storage

Another successfully applied alternative-energy source is thermal storage. Chillers make either ice or chilled water during times of decreased electricity costs. The energy is stored in tanks and then discharged to satisfy cooling loads during times of high electrical costs. Other manuals describe the use of thermal storage in detail. [6,7,8,9]

Use any of these technologies to provide value to the building owner through judicious use of alternative fuels.

Chilled-Water System Issues

Contingency

In addition to failure recovery, it may be wise for plant designers to work with building owners to develop a contingency plan for chilled water in the case of emergency shutdown or an extended breakdown. Often this is critical for process cooling applications. Such a plan can include working with suppliers to establish a short lead-time on equipment leasing. When equipment leasing is combined with, for example, piping stubs built into the chilled-water system for quick connection, a contingency plan can be put into action quickly and the system can produce chilled water again in a short period of time.

Cooling contingency planning

Today, many organizations have contingency plans for critical areas of their business. Some deal with natural disasters and others with the loss of power in critical areas. However, few have actually taken the time to think about what a loss of cooling would mean to their facility. If the cooling system failed or was suddenly grossly undersized due to weather, etc., how would that affect business? What financial risk would be involved with a loss of cooling?

Cooling contingency planning is intended to minimize the losses a facility may incur as a result of a total or partial loss of cooling. It allows a building owner to act more quickly by having a plan in place and by proactively preparing his or her facility to accept temporary equipment. Although a number of facilities are prepared after the construction phase, the construction phase provides an easy and cost-effective opportunity to prepare a facility and is a logical time to provide water stubouts and electrical connections. This helps to keep costs down and reduces the need to shut down existing equipment to make necessary building preparations.

Cooling contingency planning is the process of preparing for a loss of cooling while in a nonemergency situation. This allows common sense, rather than panic, to prevail during a critical event. The following topics are general and broad in scope. They provide a sense of what is involved in the planning process. Contingency planning itself is very detailed and situation-specific.

Minimum capacity required It is important to first identify the minimum capacity required. With multiple chillers in a facility, it may be acceptable to have less tonnage in an emergency situation. For example, a facility's chiller plant may consist of 1,800 tons [6,330 kW], but the minimum tonnage required may only be 1,200 tons [4,220 kW]. Therefore, it is also important to identify the plan of action if Chiller 1 fails, if Chiller 2 fails, if Chillers 2 and 3 fail, and so on.

Chilled-Water System Issues

Type and size of chiller The type and size of contingency cooling required by a facility are determined by several factors. In turn, the choice of chiller determines how the facility is prepared. Examples of parameters that determine the chiller are:

- Electrical requirements
- Ease of installation (air-cooled chillers are easier to set up)
- Location or available space
- Comfort or process cooling

Location of equipment Location can be a major factor in contingency planning. When selecting the location of the temporary equipment it is important to consider:

- Water and electrical connections location
- Sound sensitive areas in the facility
- Location easily accessible to service staff
- Equipment separated from the public

Water and electrical connections

- Water connection size requirements
- External stubout locations
- Sufficient power to run the temporary unit
- Possible generator requirement

Ancillary equipment

- Pumping system requirements
- Temporary hose requirements
- Electrical cable requirements

This section briefly describes some of the items to consider when establishing a cooling contingency plan. Keep in mind that there may be other considerations, depending on the application.

Chilled-Water System Issues

Chapter references

1 Avery, G., P.E.; "Controlling Chillers in Variable-Flow System", *ASHRAE Journal*, February 1998. pp. 42-45.

2 Coad, W.J., P.E.; "A Fundamental Perspective on Chilled-Water Systems", *Heating/Piping/Air Conditioning*, August 1998, pp. 59-66.

3 Kirsner, W.; "The Demise of the Primary-Secondary Pumping Paradigm for Chilled-Water Plant Design", *Heating/Piping/Air Conditioning*, November 1996.

4 Schwedler, M., PE and Brunsvold, D., Absorption Chiller System Design, SYS-AM-13, The Trane Company, May 1999.

5 Taylor, S. T.; "Degrading Delta-T in New and Existing Chilled Water Plants", *Cool $ense National Forum on Integrated Chiller Retrofits*, Lawrence Berkeley National Laboratory and Pacific Gas & Electric, September 1997.

6 Trane Applications Engineering Group, "Thermal Storage - Understanding Its Economics," Ice Storage Systems, *Engineered Systems Clinics*. ISS-CLC-1, The Trane Company, 1991.

7 Trane Applications Engineering Group, "Thermal Storage - Understanding the Choices," Ice Storage Systems, *Engineered Systems Clinics*. ISS-CLC-2, The Trane Company, 1991.

8 Trane Applications Engineering Group, "Thermal Storage - Understanding System Design," Ice Storage Systems, *Engineered Systems Clinics*. ISS-CLC-3, The Trane Company, 1991.

9 Trane Applications Engineering Group, "Thermal Storage–Understanding Control Strategies," Ice Storage Systems, *Engineered Systems Clinics*. ISS-CLC-2, The Trane Company, 1991.

Condenser-System Variations

Water-cooled chillers require condenser-water-system variations to be considered. For a discussion of condenser-water temperatures and flow rates refer to the section, *Chilled-Water-Plant Basics,* page 3. Since air-cooled-chiller condenser controls are part of the chiller design, they are not discussed in this manual.

To ensure optimum heat transfer performance, the condenser-heat transfer surfaces must be kept free of scale and sludge. Even a thin deposit of scale can substantially reduce heat transfer capacity and chiller efficiency. Specifics of cooling-tower-water treatment are not discussed in this manual. Engage the services of a qualified water treatment specialist to determine the level of water treatment required to remove contaminants from the cooling tower water.

Condenser flow configurations

Most importantly, the inlet to the pump must be under sufficient net positive head. This often means locating the pump below the cooling-tower sump.

Single tower per chiller

In some applications each chiller has a dedicated cooling tower. This is most likely to occur when chillers, and their accompanying towers are purchased at different times during the facility's life — such as when additions are made.

Manifolded pumps

A much-used pumping arrangement has a single cooling-tower sump with manifolded pumps, one condenser water line, and separate, smaller, pipes for each chiller as shown in Figure 28. This provides a number of advantages:

- Pumping redundancy
- If cooling towers cells can be isolated, any cooling-tower cell runs with any chiller
- Hydraulics are generally less problematic than on the chilled waterside
- Cooling towers can be located remotely from chillers, with only a single supply and return pipe to connect them

Figure 28 Manifolded condenser-water pumps

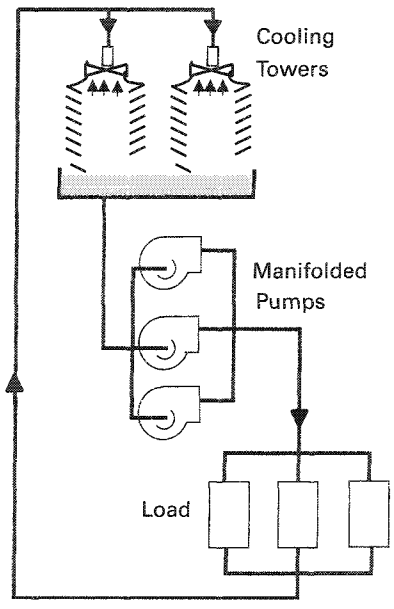

Condenser-System Variations

Condenser water control for transient conditions

Every chiller requires a pressure differential between the evaporator and condenser in order to operate. The chiller must develop its pressure differential within a manufacturer-specified time or its controls will shut it off. During some start-up conditions, this pressure differential may be hard to produce within the time limitation.

An example of such a condition is an office building that has been unoccupied during a cool, clear, fall weekend. The tower sump water is at 40 °F [4.4 °C]. Monday is sunny and warm, which requires a chiller to be turned on. Since the chiller is lightly loaded and the tower sump is large, the pressure differential can not be reached before the chiller turns off. If the condenser flow rate for a given chiller can be reduced, this scenario is less likely to occur. The lower flow rate increases the leaving condenser-water temperature, condenser-refrigerant temperature, and refrigerant pressure.

The flow reduction options include:

- Cooling tower bypass
- Chiller bypass
- One or two throttling valves in the condenser water pipe with the pump riding its curve
- A variable-speed condenser water pump

Once the minimum-pressure differential is reached, the flow may be increased as long as that minimum-pressure difference is maintained. Some designers and operators become concerned with possible fouling of condenser water tubes during these start-up conditions. There is little to fear due to the short duration of reduced flow operation and the limited occurrences. The advantages and disadvantages of these options are discussed in a variety of publications.[1,5]

Condenser-System Variations

Cooling-tower-fan control methods

Cooling towers operate to produce the sump water temperature. As the heat-rejection load and ambient wet bulb change, the cooling tower fans must move either more or less air to produce the desired water temperature.

Cycling a single fan

Cycling a single fan on and off is one method to maintain rough water temperature control. Since airflow changes greatly between fan speeds, so does heat rejection. Temperature swings of 7 °F to 10 °F [3.9°C to 5.6°C] are not uncommon. Some chillers, especially older chillers with pneumatic controls, may operate poorly in response to these changing temperatures. Care must also be taken to ensure that the fan does not cycle too often and damage the motor, drive, or fan assembly.

Two-speed fans

The installation of two-speed cooling tower fans is an option used frequently to reduce temperature swings. Typically, the low fan speed is between 50 and 70 percent of full speed. Since the heat rejection changes roughly in proportion with the fan speed, the temperature swing will be only 50 to 75 percent of cycling a single fan. Again, care should be taken not to cycle too often between speeds — or the gear box may incur excessive wear and fail. A distinct advantage of two-speed fans is that at low speed, the fan power is greatly reduced. Since the fan power varies with the cube of the speed (approximately) the power at half speed is about 15 percent of full speed.

"Pony" motors

Another option offered by cooling-tower manufacturers is to have two separate motors available to drive the fan. The smaller motor is referred to as a "pony" motor. It operates at two-thirds of the full speed and uses about 30 percent of the full speed power. While controlling the tower, it is important to minimize cycling between speeds.

Variable-speed drives

Using variable-speed drives on cooling-tower fans offers two distinct benefits. First, the tower-water-temperature control is extremely good. Second, the fan power varies with the cube of the speed, so there is great potential for energy savings. Variable-speed drives also allow the fan speed to be changed without fear of gear box or motor wear. They may also offer acoustical advantages by significantly lowering sound power at reduced speeds.

Condenser-System Variations

Plate-and-frame heat exchanger

As previously discussed in the section *Chilled-Water-System Variations*, page 57, a plate-and-frame heat exchanger may be used in conjunction with a cooling tower to provide cooling during very low wet-bulb conditions. When it is to be used for these purposes, designers often specify a cooling tower larger than necessary for design conditions so that it can be used for many hours with the plate-and- frame heat exchanger.

Well, river, or lake water

There are times when well, river, or lake water will be pumped through the condenser. In these cases, an examination should be undertaken to balance the cost of pumping the water with the benefit the chiller gets when more water passes through its condenser. The environmental limitations imposed by local codes are another consideration. Some locales will not allow well water to be dumped after being used. Other local authorities limit the maximum water temperature that may be returned to a body of water. Flow rates need to be carefully selected to balance the economic and environmental requirements.

Condenser-water temperature control

Chiller–tower energy balance

The subject of condenser-water temperature control has been studied by a number of people. In recent years, Braun and Didderich[2]; Hydeman, Gillespie, and Kammerud[3]; and Schwedler[4] have all independently noted that balancing chiller and cooling-tower energy is important. Hydeman, et al., showed that at various loads and ambient conditions, the optimal condenser-water temperature for a specific chilled-water plant depends on both chiller load and ambient conditions, see Figure 29. All the studies showed that during many points of operation, the optimal condition is *not* the lowest water temperature the cooling tower can produce. It is important for the system designer and operator to examine the use of system-level controls to set the tower-sump-temperature setpoint to reduce the sum of chiller-plus-tower energy. This optimal chiller-tower control can be automated by a chiller-plant management system.

Condenser-System Variations

Figure 29 Chiller–tower optimization

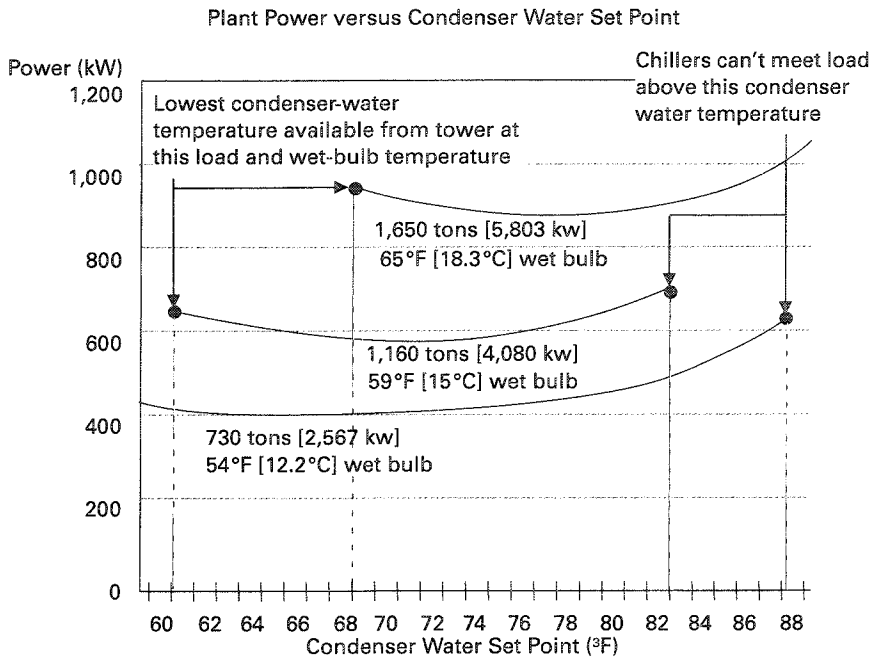

Figure 29 from Hydeman, et al., used with permission.

Condenser-water pump options

Chiller–pump balance

There are times when a system designer may choose to vary the condenser water flow in addition to, or instead of, the cooling-tower fan speed. This may be beneficial in systems with high pumping power. If a variable-speed drive is installed, the flow may be reduced and the pump power can be reduced substantially — approximately with the cube of the speed. Attempting to vary both the pump and the tower fan speeds is complex and requires adequate time for design and implementation.

Condenser-System Variations

Variable flow limitations

Care should be taken to keep the flow through the condenser above the minimum allowable flow rate for the chiller's condenser. The operator should regularly log the condenser approach temperature (the temperature difference between the condenser's refrigerant temperature and the condenser-water leaving temperature) to ensure that the tubes are not becoming fouled. The approach temperature may be monitored using a chiller plant management system.

Tower and/or tower nozzle design can affect the allowable condenser-water flow. If the flow drops below the manufacturer's specified limit, the water is no longer evenly distributed over the tower fill. This results in a decrease in cooling-tower heat-transfer effectiveness. In extreme cases, it can also result in water freezing in the cooling tower. If variable tower flow is a consideration, contact the cooling-tower manufacturer to determine the flow limit and possibly choose nozzles or cooling-tower configurations that can handle variable-water flow.

Decoupled condenser-water system

To overcome possible problems with variable-water flow across a cooling tower, some designers decouple the condenser-water system as shown in Figure 30. This arrangement allows energy optimization through a reduction of pumping power without excessively complicating the system. Because cooling towers work best with full water flow over the transfer media, a separate wetting (recirculation) pump provides a constant flow of water through the tower. This is a low energy pump, as very little lift is required.

Dedicated, variable-flow condenser pumps (CDWP-1 and CDWP-2) permit a reduction in the pumping energy whenever the temperature of condenser water results in an unproductive reduction of condenser refrigerant pressure. While the number of dedicated pumps may seem complicated at first, remember the number of valves and controls that are eliminated.

Figure 30 Decoupled condenser-water system

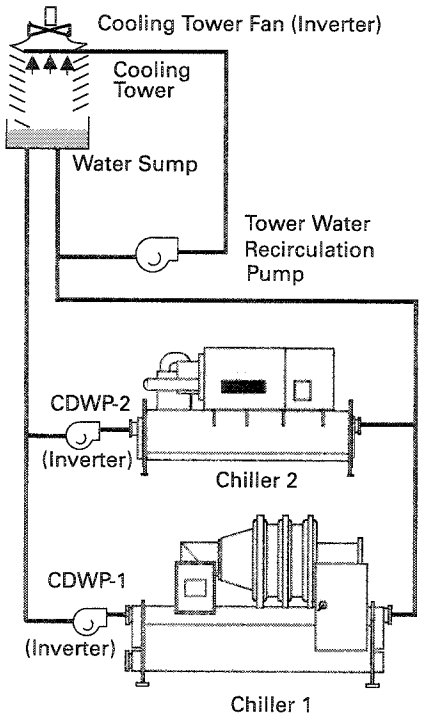

Condenser-System Variations

Retrofit opportunities

A tremendous retrofit opportunity can be realized if the low-flow concepts discussed earlier in the section *Chilled-Water-System Options*, page 20, is utilized. Building owners may need to increase the capacity of an existing system, for example in response to a building addition. In many of these buildings, the condenser water system (piping, pump, and tower) is in good condition, but is considered to be too small. By changing from traditional design conditions, the existing infrastructure can often be used while still providing additional capacity.

Keep in mind that a cooling tower is not limited to a specific tonnage. A cooling tower is a heat exchanger that exchanges heat between the entering water temperature and the ambient wet bulb. By varying the flow or the temperature, the tower capacity can be changed — often increased. An example can easily show this.

Example A hospital presently has a 450-ton [1,580-kW] refrigeration] chiller that needs to be replaced. The condenser water flow is 1,350 gpm [85.2 lps] The cooling-tower selection conditions are

- entering water temperature: 95°F[35°C]
- leaving water temperature: 85°F[29.4°C]
- ambient wet bulb: 78°F [25.6°C]

Recently, the cooling-tower fill was replaced. The tower, condenser water piping, and pump are in good condition. The hospital is planning an addition with 50 percent more load for a total of 675-tons [2,370-kW]. Must the hospital replace the condenser water system? The answer is "no", as long as the chiller is selected properly.

How is this possible? As long as the new chiller's condenser-water pressure drop is at or below that of the present chiller, the same amount of water can still be pumped. With the same flow rate, a 675-ton [2,370-kW] chiller may be selected with a condenser-water-temperature rise of approximately15°F [8.3°C]. Using the cooling- tower manufacturer's selection software, the same cooling tower can be selected at the elevated temperature difference. As shown in Figure 31, the new selection point will be:

- entering water temperature: 103°F [39.4°C]
- leaving water temperature: 88°F [31.1°C]
- ambient wet bulb: 78°F [25.6°C]

Condenser-System Variations

It quickly becomes evident that the same cooling tower and flow rate are adequate to reject more heat, in this case, approximately 50 percent more heat.

The design engineer can often help reduce total project costs using the existing infrastructure and selecting a chiller with a higher temperature differential.

Figure 31 Chiller–tower selection with different chiller capacities

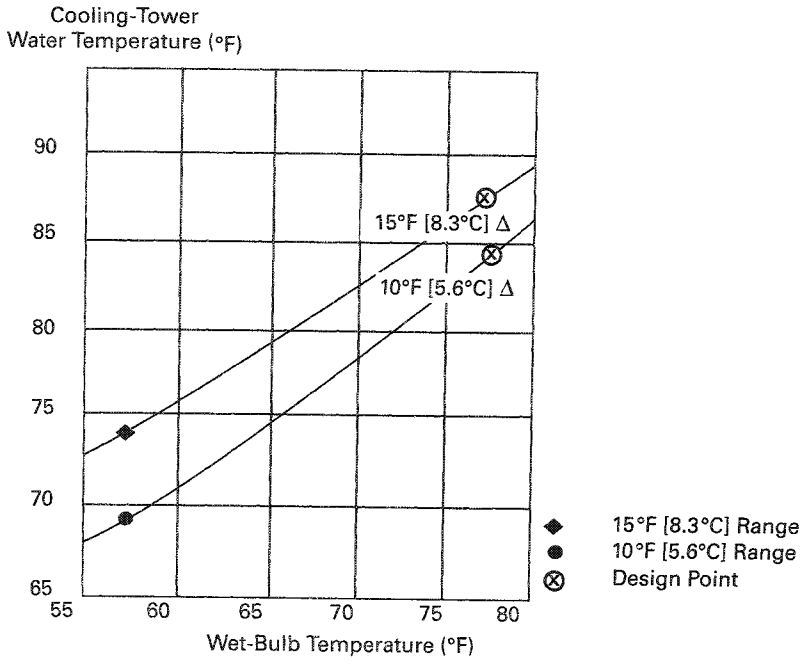

Condenser-System Variations

Chapter references

1 "Condenser-Water Temperature Control for CenTraVac™ Centrifugal Chiller Systems", *CTV-EB-84*, The Trane Company, May 1997.

2 Braun, J.E. and Diderrich, G.T. "Near Optimal Control of Cooling Towers for Chilled-Water Systems." *ASHRAE Transactions*, 96(2):806-13.1990.

3 Hydeman, M., Gillespie, K., and Kammerud, R. "CoolTools Project: A Toolkit to Improve Evaluation and Operation of Chilled Water Plants." Cool $ense National Forum on Integrated Chiller Retrofits, Lawrence Berkeley National Laboratory and Pacific Gas & Electric, September 1997.

4 Schwedler, M., PE, and Bradley, B.; "Tower Water Temperature–Control It How???" *Engineers Newsletter*, Volume 24, No. 1, The Trane Company, 1995.

5 "Water-Cooled Series R Chiller - Models RTHB & RTHC Condenser Water Control", *RLC-EB-4*, The Trane Company, August 1999.

Conclusion

Since most chilled water systems incorporate more than one chiller, it is vital to have a clear understanding of multiple-chiller concepts and their application. There is nothing particularly complex about the principles involved. Instead, system design is simply a matter of exercising a few key rules of applied physics.

A myriad of choices are available for the design and operation of chilled water systems. These choices include flow rates, temperatures, system configurations, and control options. After determining the needs and wants of the building owner and chiller plant operator, judicious use of these choices allows designers to provide solutions that add real value.

When applying the principles in this manual, it is important to remember the following rules:

- **Rule 1** Strive for simplicity. Simple does not always mean using the fewest components. Simplicity is usually elegant in its ability to be universally understood.
- **Rule 2** If the system designer can explain how a design works, there is a good chance that the system will function well. If the designer can't explain how the design works, there is *no* chance that the system will operate efficiently.
- **Rule 3** If the system operator understands the designer's explanation of how the system works, there is a good chance that the system will work. If the system operator doesn't understand the explanation, there is *no* chance that the system will operate efficiently.

Glossary

ASHRAE American Society of Heating, Refrigerating and Air-Conditioning Engineers.

building automation system A combination of controllers and other software products which communicate and control various mechanical systems to enable building management. These include the heating, ventilation, and air conditioning (HVAC) systems as well as lighting systems, access control, and miscellaneous other devices within a building. Also called a building management system (BMS).

chilled water Also know as leaving-chilled-water or leaving-evaporator-water; the cold water produced by the chiller (flowing through the tube bundle in the evaporator) and pumped to the air handler coils throughout the building. Within the evaporator, refrigerant surrounds the tube bundle and accepts heat from the return chilled water.

chiller An air-conditioning system that circulates chilled water to various cooling coils in an installation.

coil An evaporator or condenser made up of tubing either with or without extended surfaces (fins).

condenser The region of the chiller where refrigerant vapor is converted to liquid so that the temperature and pressure can be decreased as the refrigerant goes into the evaporator.

condenser water, leaving *See* cooling water.

cooling tower water *See* cooling water.

cooling water Also known as tower water, leaving-cooling water, leaving-condenser water, entering-absorber water, condenser-absorber water, entering-cooling water, or cooling tower water; obtained from the source (tower, river, pond, etc.) to which heat is rejected, flows through the tubes that run through the absorber and the condenser, and is returned to the source.

In electrically driven chillers, the cooling water picks up heat only from the condenser. In an absorption chiller, the cooling water also has to pick up heat from the absorber. The water typically flows from the source at 85°F [29.4°C], first to the absorber and then to the condenser (series flow). Associated water temperatures are referred to as entering-absorber-water temperature (or leaving-tower-water temperature) and leaving-condenser-water temperature (or entering-tower-water temperature).

COP Coefficient of Performance; cooling effect divided by heat input (dimensionless); the reciprocal of efficiency.

direct digital control Programming used by building control systems to control variable outputs, such as valves or actuators. In the HVAC industry, DDC means direct digital control by a microprocessor controller with no intermediate device.

Glossary

evaporator The region in the chiller where the system chilled water is continuously cooled down by flashing the refrigerant to vapor in a deep vacuum as it picks up heat from the returning system water.

fouling Deposits of foreign material in the water side of tubing in refrigeration condensers or chillers which affect the transfer of heat.

heat exchanger A device used to transfer heat between two physically separated fluids.

heat transfer The movement of heat from one body or substance to another. The three methods of heat transfer are conduction, convection and radiation.

load Any one of several output devices that are to be controlled by a building management panel.

mechanical-compression refrigeration cycle The electrically driven chiller makes use of an electric motor, driving a compressor to produce chilled water for cooling. It does this via a mechanical process that uses a refrigerant for a working fluid. Inside the vessel are pressure and temperature differentials, where heat is absorbed at a low temperature and then rejected at a higher temperature.

psychrometric chart A chart that shows the relationship between the temperature, pressure, and moisture content of the air.

psychrometric measurement The measurement of temperature, pressure, and humidity of air using a psychrometric chart.

pumps (system)

chilled water Circulates the chilled water through the evaporator section of the chiller and then through the building coils.

cooling water Circulates the cooling water from the source through the chiller, condenser, and back to the source.

shell-and-tube A designation for a type of heat exchangers consisting of a tube bundle within a shell or casing. Often used in chiller condensers and evaporators.

shell-and-tube flooded evaporators Evaporators that use water flow through tubes built into a cylindrical evaporator with refrigerant on the outside of the tubes.

temperature, ambient The temperature of the air surrounding the object under consideration

temperature, wet-bulb A measure of the degree of moisture in the air. It is the temperature of evaporation for an air sample, measured with a thermometer that has its bulb covered by a moistened wick.

tower water *See* cooling water.

Glossary

three-way valve A flow-control valve with three fluid-flow openings. It controls constant flow through or around the load.

two-way valve A flow-control valve with two fluid-flow openings.

valve, throttling A small valve used primarily in gauge lines to shut off the line between readings, and to throttle the line to prevent fluctuations during readings.

References

2000 *ASHRAE HVAC Systems and Equipment Handbook,* Chapter 12, Hydronic Heating and Cooling System Design. American Society of Heating, Refrigeration and Air-Conditioning Engineers.

2000 *ASHRAE HVAC Systems and Equipment Handbook,* Chapter 36, Cooling Towers. American Society of Heating, Refrigeration and Air-Conditioning Engineers.

ARI Standard 550/590–1998, *Standard for Water Chilling Packages Using the Vapor Compression Cycle,* Air-Conditioning & Refrigeration Institute.

ARI Standard 560–1992, *Standard for Absorption Water Chiller and Water Heating Package,* Air-Conditioning & Refrigeration Institute.

Avery, G., PE; "Controlling Chillers in Variable Flow System", *ASHRAE Journal,* February 1998. pp. 42–45.

Braun, J.E. and Diderrich, G.T.; "Near Optimal Control of Cooling Towers for Chilled-Water Systems". *ASHRAE Transactions,* 1990, 96(2):806–13.

BSR/ASHRAE/IESNA 90.1–1999, "Energy Standard for Buildings Except Low-Rise Residential Buildings", *Illuminating Engineering Society of North America and American Society of Heating, Refrigerating and Air-Conditioning Engineers,* Inc., 1999.

Coad, W.J., PE; "A Fundamental Perspective on Chilled Water Systems", *Heating/Piping/Air Conditioning,* August 1998, pp. 59–66.

"Condenser Water Temperature Control For CenTraVac™ Centrifugal Chiller Systems", *CTV-EB-84,* The Trane Company, May 1997.

Demirchian, G. H. PE and Maragareci, M. A. PE; "The Benefits of Higher Condenser Water ΔT at Logan International Airport Central Chilled Water Plant." *IDEA 88th Annual Conference Proceedings,* 1997, pp. 291–300.

Eley, C.: Energy Analysis—Replacement of Chillers For Buildings 43, 47, and 48. Eley Associates, CA, April 1997.

* Eppelheimer, D., PE and Bradley, B.; "Chilled Water Plants and...Asymmetry as a Basis of Design, *Engineers Newsletter,* Volume 28, No. 4, The Trane Company, 1999.

Hougton, D., PE; "Know Your Flow, a Market Survey of Liquid Flow Meters", Tech Update, *E SOURCE, INC.,* March 1996

Refer to www.trane.com/commercial/library/newsletters.asp for copies of newsletters with an * symbol.

References

Hydeman, M., Gillespie, K., and Kammerud, R. "CoolTools Project: A Toolkit to Improve Evaluation and Operation of Chilled Water Plants". *Cool $ense National Forum on Integrated Chiller Retrofits,* Lawrence Berkeley National Laboratory and Pacific Gas & Electric, September 1997.

Kelly, D.W. and Chan, T., "Optimizing Chilled Water Plants", *Heating/Piping/Air Conditioning,* January 1999, pp. 145–7.

Kirsner, W.; "The Demise of the Primary-Secondary Pumping Paradigm for Chilled Water Plant Design", *Heating/Piping/Air Conditioning,* November 1996.

Landman, W. and Bradley, B.; "Off-Design Chiller Performance", *Engineers Newsletter,* Volume 25, No. 5, The Trane Company, December 1996.

Schwedler, M, PE, "Take It To the Limit...Or Just Halfway?" *ASHRAE Journal,* July 1998, pp. 32–9.

* Schwedler, M., PE and Bradley, B.; "An Idea for Chilled-Water Plants Whose Time Has Come...Variable-Primary-Flow Systems", *Engineers Newsletter,* Volume 28, No. 3, The Trane Company, 1999.

* Schwedler, M., PE and Bradley, B.; "How Low Flow Systems Can Help You Give Your Customers What They Want", *Engineers Newsletter,* Volume 26, No. 2, The Trane Company, 1997.

* Schwedler, M., PE and Bradley, B.; "Tower Water Temperature - Control It How???" *Engineers Newsletter,* Volume 24, No. 1, The Trane Company, 1995.

Schwedler, M., PE and Nordeen, A.; "Low Flow Works for Absorbers Too!" *Contracting Business,* November 1998, pp. 108-112.

Schwedler, M., PE, Letter to the Editor, *ASHRAE Journal,* April 1998, p. 30.

Taylor, S. T.; "Degrading Delta-T in New and Existing Chilled Water Plants", *Cool $ense National Forum on Integrated Chiller Retrofits,* Lawrence Berkeley National Laboratory and Pacific Gas & Electric, September 1997.

Trane Applications Engineering Group; "A New Era of Free Cooling", *Engineers Newsletter,* Volume 20, No. 3, The Trane Company, 1991.

Trane Applications Engineering Group; "Two Good Old Ideas Combine to Form One New Great Idea", *Engineers Newsletter,* Volume 20, No. 1, The Trane Company, 1991.

References

Trane Applications Engineering Group, "Thermal Storage - Understanding Its Economics," Ice Storage Systems, *Engineered Systems Clinics.* ISS-CLC-1, The Trane Company, 1991.

Trane Applications Engineering Group, "Thermal Storage - Understanding the Choices," Ice Storage Systems, *Engineered Systems Clinics.* ISS-CLC-2, The Trane Company, 1991.

Trane Applications Engineering Group, "Thermal Storage - Understanding System Design," Ice Storage Systems, *Engineered Systems Clinics.* ISS-CLC-3, The Trane Company, 1991.

Trane Applications Engineering Group, "Thermal Storage–Understanding Control Strategies," Ice Storage Systems, *Engineered Systems Clinics.* ISS-CLC-2, The Trane Company, 1991.

Waltz, J. P., PE, CEM; "Don't Ignore Variable Flow", *Contracting Business*, July 1997, pp. 133–144.

"Water-Cooled Series R Chiller—Models RTHB & RTHC Condenser Water Control"; *RLC-EB-4*, The Trane Company, August 1999.

Webb, R.L. and Li, W.; "Fouling in Enhanced Tubes Using Cooling Tower Water, Part I: Long-Term Fouling Data", *International Journal of Heat and Mass Transfer*, 2000.

Index

A

ambient conditions, effect of 10

arrangement, parallel 55

B

bypass flow control 42

bypass-line sizing 50

bypass line with check valve 63

bypass locations 43

C

chilled- and condenser-water flow rates 15

chilled- and condenser-water temperatures 13

chilled-water distribution system 7

chilled-water flow rate, effect of 3

chilled-water plants 2

chilled-water pump 8

chilled-water-pump configuration 49

chilled-water reset 47

chilled-water-system, issues 63

chilled-water temperatures 14

chilled-water temperature, effect of 3

chiller, air-cooled 2

chiller, adding a 39

chiller, adding in a VPF system 44

chiller production 32

chiller–pump balance 73

chiller range, applications outside 59

chiller response to changing conditions 61

Index

chiller sequencing 39, 43

chiller, subtracting 39

chiller, subtracting in a VPF system 45

chiller–tower energy balance 72

chiller, unequal sizing 58

chiller, water-cooled 2

chillers, parallel 27

chillers, series, 29

coil response 28

coils, uncontrolled 6,7

condenser, air-cooled 5

condenser flow configurations 69

condenser-water-control options for transient conditions 70

condenser-water flow rate, effect of 4

condenser, water-cooled 4

condenser-water system 10

condenser-water system, decoupled 74

condenser-water temperature, effect of 4

condenser-water temperatures 14

condenser-water temperature control 72

connections, electrical and water 67

controls 11

control, chiller 11

control, flow-based 38

control, pump 12

Index

control, system 57

cooling contingency planning 66

cooling-tower-fan control methods 71

cooling-tower options with low flow 20

D

Darcy–Weisbach 17

decoupled system–principle of operation 37

decoupling, hydraulic 31

deficit 38

design considerations 49

distribution basics, 34

E

energy sources, alternative 64

equipment, ancillary 67

expansion, plant 51

evaporator 3

F

failure recovery 64

fan, cycling a single 71

fans, two-speed 71

flow limits, absolute 42

flow rate, out of range 60

flow rates, cost implications 22

flow rates, different 38

flow rates, standard-rating 15

flow rates, selecting 16

flow-sensing 38

Index

flow, variable 35

flow limitations, variable 73

fluid in the loop, amount of 50

fuels, optional 57

H

Hazen–Williams 17

heat exchanger, plate-and-frame 57, 72

heat recovery 54

L

limits 42

load, diversity 35

load, effect of 10

loads 5

loading, preferential 54

low Δ T syndrome 63

low-flow rates, misconceptions about 24-26

M

motors, pony 71

P

parallel arrangement 55

piping, distribution 9

plant expansion 51

pump option, condenser water 73

pumping arrangements, campus 36

pumping arrangements, common 36

pumping arrangements, tertiary 36

pumps, distribution 34

Index

pump per chiller 49

pumps, manifolded 49, 69

R

rate of change 51

retrofit capacity changes 21

retrofit opportunities 75

S

series–counterflow application 58

sidestream arrangement 56

software analysis tools 41

surplus flow 38

system control 57

system supply and demand 38

systems, low-flow 24

systems, primary–secondary 31

systems, variable-primary-flow 40

system response to changing conditions 51

T

temperature control 38

temperature, coil response to decreased entering water 19

temperature, elevated return-water 35

temperatures, out of range 61

temperature-sensing 38

temperatures, standard rating 13

tower, cooling 10

tower per chiller, single 69

tower, smaller 21

Index

tower, larger 21

V

valve, check 63

valve, check in the bypass line 63

valve, three-way 6,7

valve, two-way 6,7

valve reset, critical 48

variable flow limitations 74

variable-primary-flow systems 40

variable-speed drives 71

variable-speed pump 6,7

VPF advantages 41

VPF caveats 41

VPF system, adding a chiller 44

VPF system, critical requirements 46

VPF system, "overpumping" a chiller 45

VPF system, subtracting a chiller 45

W

water, well or river 72



TRANE®

The Trane Company
An American Standard Company
www.trane.com

For more information contact
your local district office or
e-mail us at comfort@trane.com

Literature Order Number	SYS-APM001-EN (October 2000)
File Number	PL-000-SYS-APM001-EN
Supersedes	CON-AM-21 (May 1987)
Stocking Location	La Crosse

Since The Trane Company has a policy of continuous product improvement, it reserves the right to change design and specifications without notice.

TRANE

Applications Engineering Manual

Refrigeration System Equipment Room Design

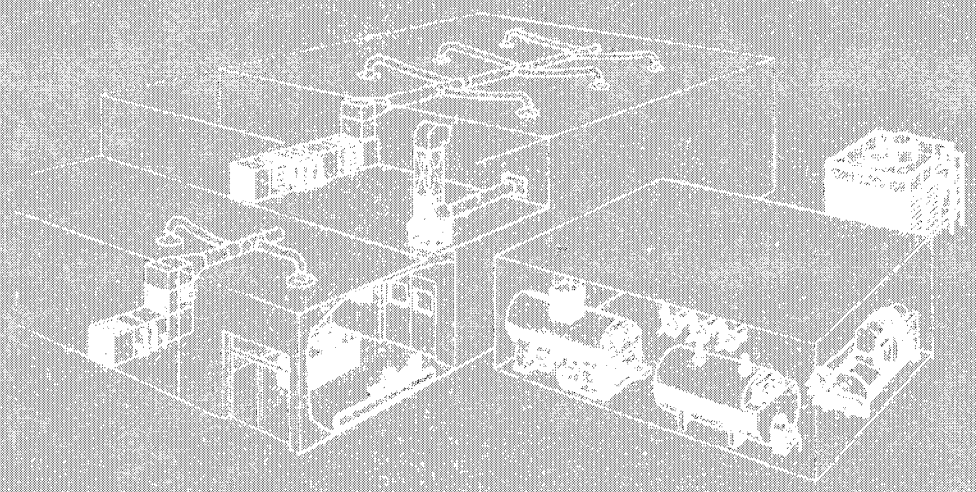

REF-AM-3 January 1995
Supersedes REF-AM-3 892, REF-AM-3A-193



Applications Engineering Manual

Refrigeration System Equipment Room Design

by
Dave Guckelberger, Applications Engineer

with
Brenda Bradley, Information Designer

© 1995, The Trane Company, a division of American Standard Inc., La Crosse, WI 54601-7599

Preface

While mechanical refrigeration systems satisfy a wide variety of cooling needs, the chemicals (refrigerants) used in these systems are potentially detrimental to one's health if improperly handled. To address that concern, this manual promotes machinery room design practices that provide a safe environment for personnel who operate and maintain refrigeration systems. Its content may be of particular interest to architects, building owners and maintenance personnel, as well as HVAC designers.

The foundation for this manual is the ASHRAE Standard entitled "Safety Code for Mechanical Refrigeration," ANSI/ASHRAE 15–1994. However, while Standard 15 covers the full spectrum of mechanical refrigeration systems — i.e., systems of all sizes, refrigerants of all types — **this manual focuses specifically on centrifugal and helical-rotary refrigeration systems that require machinery rooms**. As described in the *Standards and Guidelines* section of this manual, ASHRAE Standard 15–1994 clearly defines when a machinery room is required.

Some refrigeration systems use ammonia as the refrigerant. Though similar to other refrigeration systems, there are enough significant exceptions in the relevant standards and design practices to make it difficult to discuss both types of systems concurrently; therefore, **ammonia systems are not addressed in this manual**.

The Trane Company, in proposing these system design and application concepts, assumes no responsibility for the performance or desirability of any resulting system design. System design is the prerogative and responsibility of the system designer.

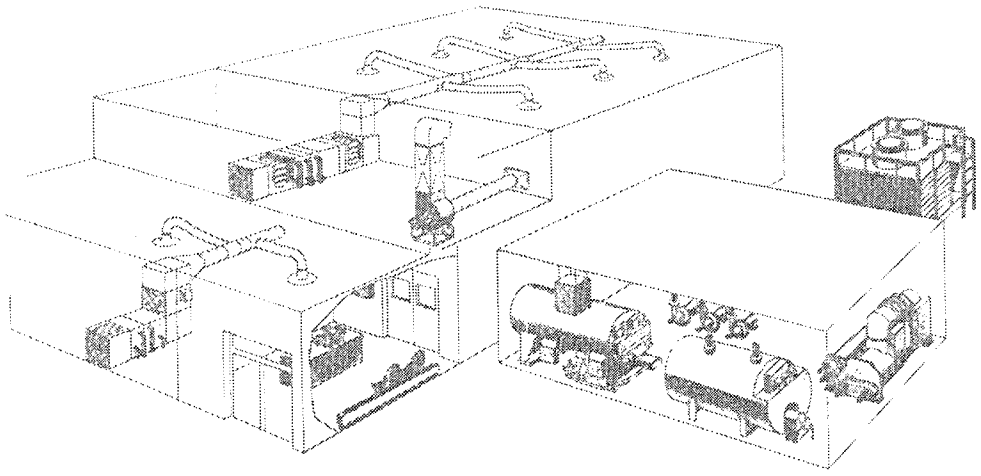

Table of Contents

Standards and Guidelines 4
ANSI/ASHRAE Standard 34–1992 4
Numbers, Names Used with Refrigerants 4
Safety Group Classifications 5
ANSI/ASHRAE Standard 15–1994 6
Step 1: Identify the Safety Group Classification .. 7
Step 2: Decide the Occupancy Classification 7
Step 3: Determine the System Probability 8
Step 4: Use Table 2 to Identify the Applicable Refrigerant Quantity Rules 9
System Application Requirements 9

Machinery Room Design 11
Chiller Placement 11
Ventilation 12
Volume Requirements 12
Natural Ventilation 12
Mechanical Ventilation 12
Vent Locations 13
Doors and Passageways 15
Access 15
Continuous Monitoring 15
Refrigerant Monitor Application 16
Placement 16
How Many 17
Open-Flame Devices 17
Pressure-Relief Piping 18
Discharge Line Sizing 18
Drip Leg 20
Purge Discharge 21
General Requirements 21

Machinery Room Monitors 23
What ASHRAE 15–1994 Requires 23
Types of Monitors 23
Choosing the Right Monitor 24
Monitor Inputs and Outputs 24
Remote Reset Input 24
Alarm Relay Output 24
Failure Relay Output 25
Refrigerant-Monitor Analog Output 25
Multichannel Scanners 25
Benefits of a BAS Interface 26

Sample Equipment Room Design Specification 27

Appendix A — Indirect Open-Spray Systems A–1
Temperature/Pressure Relationships A–1
Further Assurance A–3
Refrigerant Containment A–4

Appendix B — How Much Refrigerant per Occupied Space? B–1
Unventilated Occupied Spaces B–1
Ventilated Occupied Spaces B–1

Appendix C — Glossary and Acronyms C–1

Appendix D — Index D–1

Appendix E — List of Insets, Figures and Tables E–1

Standards and Guidelines

The American Society of Heating, Refrigerating and Air-Conditioning Engineers (ASHRAE) is an organization whose members come from all aspects of the heating, ventilation, air conditioning and refrigerating (HVAC&R) business. Together, the members draft Standards and Guidelines designed to assure safe distribution and use of HVAC&R products. These standards are frequently adopted by state and local authorities, and written into state and local codes.

Considerable time can pass between the printing of a new or revised ASHRAE Standard and the resulting local code. In the interim, it's the owner/designer's prerogative to specify design according to the Standards. However, in the event of a mishap, the legal system often views the Standards available at the time the building was designed as the minimum design practice "standard of care" ... and this standard of care may be more stringent than the current code.

Two ASHRAE Standards deal with the use of refrigerant in an equipment room: **ANSI/ASHRAE Standard 34–1992** and **ANSI/ASHRAE Standard 15–1994**. Excerpts from each (indented for easy identification) appear throughout this manual.

In addition to these two Standards, **ASHRAE Guideline 3–1990** and **Addendum 3a–1992**, "Reducing Emission of Fully Halogenated Chlorofluorocarbon (CFC) Refrigerants in Refrigeration and Air Conditioning Equipment and Applications," recommend practices and procedures for reducing CFC refrigerant leakage during operation and maintenance of HVAC equipment. Though not discussed here, Guideline 3–1990 and Addendum 3a–1992 contain valuable information, and should be reviewed by owners and designers of refrigeration systems.

ANSI/ASHRAE Standard 34–1992, "Number Designation and Safety Classification of Refrigerants"

The twofold purpose of ASHRAE Standard 34–1992 is clearly stated from the outset ...

> " ... to establish a simple means of referring to common refrigerants instead of using the chemical name, formula, or trade name. It also establishes a uniform system for assigning reference numbers and safety classifications to refrigerants." [from Section 1]

... and is further defined by its declared scope:

> "This standard provides an unambiguous system for numbering refrigerants and assigning composition-designating prefixes for refrigerants. Safety classifications based on toxicity and flammability data are included." [from Section 2]

Since this information is fundamental to our discussion of equipment room design practices, let's quickly review the refrigerant naming convention and classification scheme established by Standard 34.

Numbers, Names Used with Refrigerants

ASHRAE Standard 34–1992 clearly explains the format for refrigerant numbering. *Table 1 (page 5)* shows the chemical names and proper number designators for common refrigerants. Notice that the numeric designator can be preceded by an "R" (e.g., R–11, R–22), or by a more descriptive prefix that designates the presence, respectively, of hydrogen (H), bromine (B), chlorine (C), fluorine (F) and carbon (C). So, Refrigerant 11 — which contains chlorine, fluorine and carbon — is designated as "CFC–11" or "R–11," while Refrigerant 22 — which contains hydrogen, chlorine, fluorine and carbon — becomes "HCFC–22" or "R–22." Both aliases are equally acceptable, as is using either the number with the word "refrigerant" or a trade name.

☞ *It's good practice to use one of the proper names when referring to refrigerants to avoid confusion and misunderstandings.*

Table 1
Refrigerant/Refrigerant Blend Data and Safety Classifications

Refrigerant							Quantity of Refrigerant per Occupied Space[a]		
Prefix: "R" or...	No.	Chemical Name	Chemical Formula	Normal Boiling Point		Safety Group	lb per 1000 cu ft[b]	ppm by vol	g/m³ [b]
Methane Series:									
CFC	11	trichlorofluoromethane	CCl_3F	24° C	75° F	A1	1.6	4,000	25
CFC	12	dichlorodifluoromethane	CCl_2F_2	–30° C	–22° F	A1	12.0	40,000	200
HCFC	22	chlorodifluoromethane	$CHClF_2$	–41° C	–41° F	A1	9.4	42,000	150
Ethane Series:									
CFC	113	1,1,2–trichlorotrifluoroethane	CCl_2FCClF_2	48° C	118° F	A1	1.9	4,000	31
HCFC	123	2,2–dichloro–1,1,1–trifluoroethane	$CHCl_2CF_3$	27° C	81° F	B1[c]	0.4	1,000	6.3
HFC	134a	1,1,1,2–tetrafluoroethane	CH_2FCF_3	–26° C	–15° F	A1[c]	16	60,000	250
HFC	152a	1,1–difluoroethane	CH_3CHF_2	–25° C	–13° F	A2	1.2	7,000	20

Refrigerant No.	Composition (Weight %)	Normal Boiling Point		Safety Group	Quantity of Refrigerant Blend per Room Volume[a]: lb per 1000 cu ft[b]	ppm by vol	g/m³ [b]
Azeotropes:[d]							
500	CFC–12 / HFC–152a (73.8 / 26.2)	–33° C	–27° F	A1	12	47,000	200
502	HCFC–22 / CFC–115 (48.8 / 51.2)	–45° C	–49° F	A1	19	65,000	300

(a) Quantities are to be used only in conjunction with Section 7 of ASHRAE Standard 15–1994. The basis for the values shown in this table is a single event where a complete discharge of any refrigerant system into the occupied space occurs. The quantity of refrigerant is the most restrictive of a minimum oxygen concentration of 19.5% or as follows:

Group A1 ... 80% of the cardiac sensitization level for R–11, R–12, R–22, R–113, R–134a, R–500 and R–502; others are limited by levels where oxygen deprivation begins to occur.
Group A2, A3 ... approximately 20% of LFL (Lower Flammability Limit).
Group B1 ... 100% of the measure consistent with the IDLH (Immediately Dangerous to Life or Health) value for R–123.
Group B2, B3 ... 100% of IDLH value or 20% of LFL, whichever is lower.

(b) To correct for height above sea level, multiply values given in table by $[1 - 2.42 \times 10^{-6} H]$ where **H** is measured in feet, or by $[1 - 7.94 \times 10^{-2} h]$ where **h** is measured in kilometers.

(c) Per ASHRAE Standard 34–1992, this toxicity classification is based on recommended exposure limits provided by chemical suppliers. These ratings are provisional and will be reviewed when toxicological testing is completed.

(d) Per ASHRAE Standard 34–1992, azeotropic refrigerants exhibit some segregation of components at conditions of temperature and pressure other than those at which they were formulated. The extent of segregation depends on the particular azeotrope and hardware system configuration.

Safety Group Classifications

ASHRAE Standard 34–1992 also defines refrigerant Safety Group Classifications according to toxicity and flammability. **Toxicity** classifications are based on the Threshold Limit Value®–Time Weighted Average (TLV–TWA) established for each refrigerant. TLV–TWA is defined in Standard 15–1994 as:

> " ... the refrigerant concentration in air for a normal 8-hour workday and a 40-hour work week, to which repeated exposure, day after day, will not cause an adverse effect in most persons."
> [from Section 3]

Refrigerants are assigned to one of two classes — "A" or "B" — based on these criteria:

> "**Class A** signifies refrigerants for which toxicity has not been identified at concentrations less than or

equal to 400 ppm, based on data used to determine Threshold Limit Value–Time-Weighted Average (TLV–TWA) or consistent indices.

"**Class B** signifies refrigerants for which there is evidence of toxicity at concentrations below 400 ppm, based on data used to determine TLV–TWA or consistent indices." [from Section 6.1.2]

The letter designation for toxicity is followed by a number indicating its **flammability**. Refrigerants with no flame propagation potential are given a "1," lower flammability refrigerants receive a "2," and refrigerants with a higher flammability are assigned a "3." Flame propagation and Lower Flammability Limits (LFL) for each of these three categories are defined in ASHRAE Standard 34—1992 as follows:

"**Class 1** indicates refrigerants that do not show flame propagation when tested in air at 101 kPa (14.7 psia) and 18° C (65° F).

"**Class 2** signifies refrigerants having a lower flammability limit (LFL) of more than 0.10 kg/m^3 (0.00625 lb/ft^3) at 21° C and 101 kPa (70° F and 14.7 psia) and a heat of combustion of less than 19,000 kJ/kg (8,174 Btu/lb). The heat of combustion shall be calculated assuming that combustion products are in the gas phase and in their most stable state (e.g., C, N, S give CO_2, N_2, SO_3; F and Cl give HF and HCL if there is enough H in the molecule, otherwise they give F_2 and Cl_2; excess H is converted to H_2O).

"**Class 3** indicates refrigerants that are highly flammable, as defined by an LFL of less than or equal to 0.10 kg/m^3 (0.00625 lb/ft^3) at 21° C and 101 kPa (70° F and 14.7 psia) or a heat of combustion greater than or equal to 19,000 kJ/kg (8,174 Btu/lb). The heat of combustion is calculated as explained above in the definition of a Class 2 category." [from Section 6.1.3]

As shown in the matrix in *Figure 1*, the preceding designations for toxicity and flammability define six "safety groups": A1, A2, A3, B1, B2 and B3. ASHRAE Standard 15–1994 refers to these groups when specifying the design criteria for refrigeration equipment located in or near a building. See *Table 1 (page 5)* for the safety group classification of each of the common refrigerants listed there.

☞ *Standard 34–1992 describes the general safety categories for refrigerants. For more detailed information on health hazards or handling practices for a particular refrigerant, request a copy of the Material Safety Data Sheet (MSDS) from the refrigerant manufacturer.*

Figure 1
ASHRAE Standard 34–1992 Refrigerant Classifications

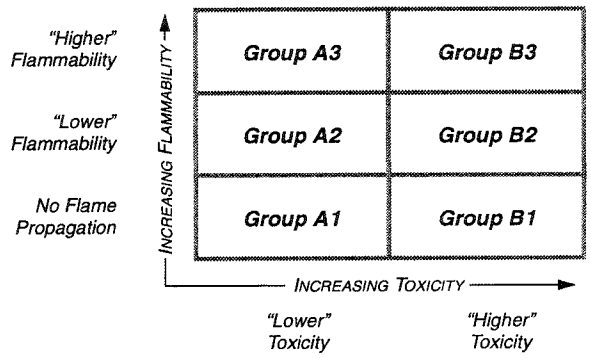

Note:
Table 1 (page 5) shows a partial list of the single-component refrigerants and azeotropic blends classified in this manner.

ANSI/ASHRAE Standard 15–1994, "Safety Code for Mechanical Refrigeration"

ASHRAE Standard 15–1994's stated purpose is:

" ... to specify safe design, construction, installation, and operation of refrigerating systems." [from Section 1]

In scope ...

" This code establishes safeguards for life, limb, health, and property and prescribes safety standards.

"This code applies:

"(a) to mechanical refrigerating systems and heat pumps used in the occupancies defined in Section 4* and installed subsequently to adoption of this code; and ...

"(b) to parts or components added after adoption of this code, or a change to a refrigerant of a different number designation (per ANSI/ASHRAE Standard 34–1992) after adoption of this code, and ...

"(c) to parts or components replaced after adoption of this code only if they are not identical in function." [from Section 2.1]

*Section 4 of Standard 15–1994 describes *Occupancy Classification,* and is summarized on page 7.

ASHRAE Standard 15–1994 details the design and installation requirements for a broad range of

refrigeration systems. It not only applies to new construction, but also to replacements, conversions and alterations that change the system's function. Some of the Standard's requirements — like the safeguards mandated by Section 7.2 to minimize the risk of accidental damage or rupture of system components — are general and apply to all system types. Others are specific to the type of refrigeration system and its use: Sections 8.13 and 8.14, for example, pertain only to refrigeration systems that require machinery rooms.

ASHRAE Standard 15–1994 does not apply where water is the primary refrigerant (i.e., absorption chillers).

So how do you determine what safety requirements must be met for compliance with ASHRAE Standard 15–1994? It's essentially a four-step process:

1 Identify the refrigeration system's **safety group classification.**

2 Determine the **occupancy classification** of the room that houses the refrigeration system.

3 Determine the **system probability** classification of the refrigeration system.

4 Based on the determinations made in the preceding steps, **use Table 2 of the Standard** (reproduced on page 10 of this manual) to identify the system application requirements — i.e., applicable "Refrigerant Quantity Rules" from Section 7.4.

Let's review these steps in greater detail.

Step 1: Identify the Safety Group Classification

As discussed earlier (pages 5–6), refrigerants are classified into one of six groups according to their **flammability** and **toxicity**. These safety classification criteria are thoroughly defined in ASHRAE Standard 34–1992. *Table 1 (page 5)* indicates the safety classifications of a number of commonly used single-component and azeotropic-blend refrigerants.

☞ *The safety group classification for any zeotropic blend corresponds to the worst-case fractionation.*

Step 2: Decide the Occupancy Classification

ASHRAE has defined seven occupancy classes that reflect the various uses of a building, and the ability of the people inside to respond in case of emergency. Key to proper use of these classifications is an understanding of what's meant by the terms **occupied space** and **machinery room**. ASHRAE Standard 15–1994 provides the following definitions:

> "occupied space: that portion of the premises accessible to or occupied by people, excluding machinery rooms.
>
> "machinery room: a space, meeting the requirements of (Section) 8.13 or 8.14, that is designed to house compressors and pressure vessels." [from Section 3]

In other words, **the room that contains the refrigeration equipment is *initially* considered part of the occupied space.** The room is only exempt from the occupied space if the "Restrictions of Refrigerant Use" in Section 7 (i.e., Refrigerant Quantity Rules 3, 4, 7 or 8 in Section 7.4.2) require that it satisfy the specific criteria in Section 8.13 or 8.14 which, in turn, qualify it as a machinery room.

Other than piping, all equipment in the building — or located less than 20 feet from any building opening *other* than an opening to a machinery room — is governed by one of these seven occupancy classifications:

1 **institutional**, where occupants cannot readily leave without assistance. Examples include (but are not limited to) hospitals, nursing homes and spaces containing locked cells.

2 **public assembly**, where occupants cannot quickly vacate due to large numbers. Examples include (but are not limited to) auditoriums, ballrooms, classrooms and restaurants.

3 **residential**, where occupants are provided with complete independent living facilities. Examples include (but are not limited to) hotels, dormitories and apartments.

4 **commercial**, where occupants transact business, receive personal services, or purchase food or other goods. Examples include office and professional buildings and markets (other than large mercantile). Other commercial occupancies are work or storage areas that do not qualify as an industrial occupancy.

5 **large mercantile**, where more than 100 persons congregate either above or below street level to

purchase merchandise.

6 **industrial**, where occupancy by the general public is prohibited and access by authorized persons is controlled. Examples include (but are not limited to) manufacturing plants, processing plants and storage facilities.

7 **mixed**, where two or more classes of occupancies share the same building.

When each occupancy is isolated from the rest of the building by tight walls, floors and ceilings, and by self-closing doors, the requirements for each occupancy apply to that portion of the building. For example, a cold storage space in a hotel might be classified as an industrial occupancy while the rest of the building is considered residential.

When occupancy areas are not isolated as described above, the occupancy with the most stringent requirements governs the entire area.

Step 3: Determine the System Probability

The "Refrigerating System Classification" section of ASHRAE Standard 15–1994 divides refrigerating systems into five categories based on the method used to extract or deliver heat. *Figure 2* identifies these five system types schematically and by name. The purpose of this categorization is to determine the **system probability**.

"System probability" indicates the likelihood of refrigerant leaking from a refrigerating system into an occupancy-classified area. As defined below, refrigeration systems are categorized as either **high** or **low probability**:

- **High-probability systems** are those in which the basic design or location of components is such that refrigerant leakage from a failed connection, seal or component could enter the occupied space. Direct-expansion split system and rooftop applications are examples of high-probability systems.
- **Low-probability systems** are any systems in which the basic design or location of components is such that it is unlikely that refrigerant leakage

Figure 2
Refrigeration System Classification (from ANSI/ASHRAE Standard 15–1994)

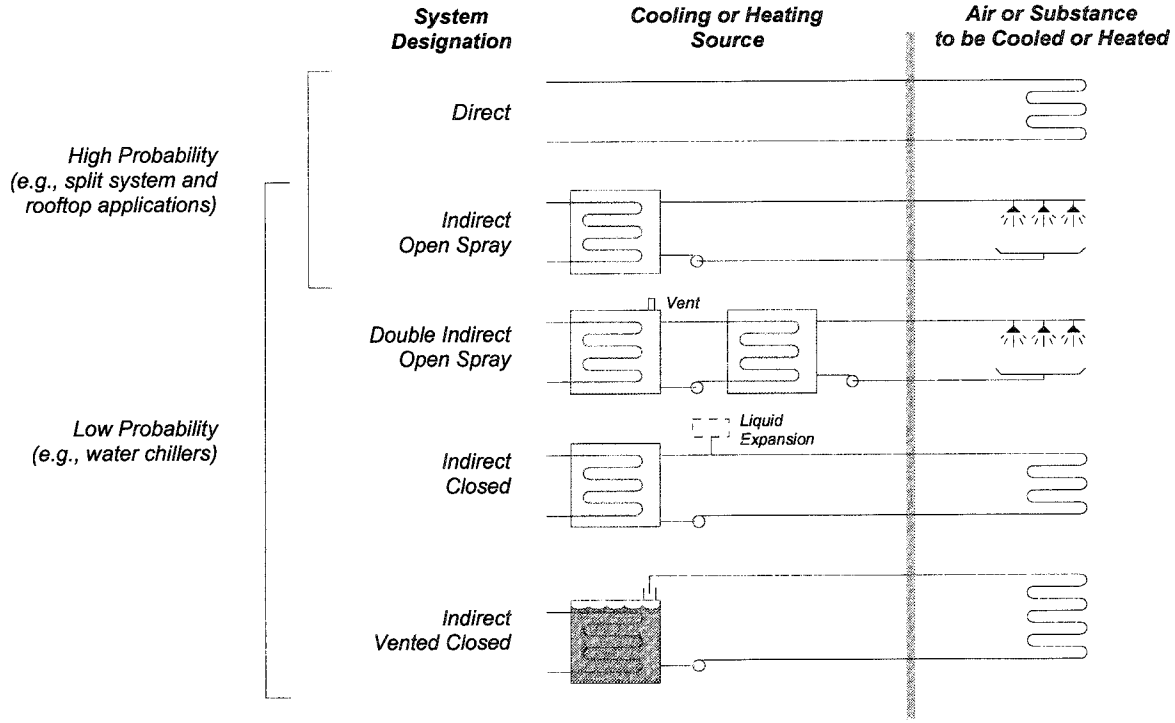

from a failed connection, seal or component will enter the occupied space. A typical example is a water chiller that serves a remote air handler.

Indirect open spray systems, also known as "air-washers" are considered low-probability when the secondary coolant pressure remains greater than the refrigerant pressure during all operating and standby conditions. (Information on design of low-probability air washer systems can be found in *Appendix A* of this manual.)

Step 4: Use Table 2 to Identify the Applicable Refrigerant Quantity Rules

Once a refrigerating system's characteristics — i.e., its safety group, occupancy and system probability classifications — have been determined, Table 2 of the Standard (reprinted on page 10) can be used to ascertain which of ASHRAE Standard 15–1994's **Refrigerant Quantity Rules** apply. These rules (also reprinted on page 10) define how much refrigerant can be used in each situation — often, with reference to Table 1 — and detail any restrictions that apply.

The basis for the quantities in Table 1 of the Standard (reprinted, in part, on page 5) is a single event in which a refrigeration system completely discharges its refrigerant into an occupied space. If the quantity of refrigerant in the system doesn't exceed the amount defined by the rules, the building occupants won't be exposed to a harmful level of refrigerant ... provided the refrigerant disperses equally throughout the occupied space.

The allowable "Quantity of Refrigerant per Occupied Space" is determined by the volume of that space and the method of ventilation used. A brief summary of the distinction made between unventilated and ventilated spaces follows; *Appendix B* demonstrates how the "volume of occupied space" is calculated in each instance.

Unventilated Spaces
When refrigerant-containing parts are located in unventilated spaces (as is typical of indirect systems such as water chillers), the volume of the smallest unventilated space containing part of the system determines how much refrigerant is permitted (i.e., volume, cu ft). If a building consists of several stories of unpartitioned space, use the volume of the smallest occupied story.

Ventilated Spaces
When the space is ventilated — as is typical of direct-expansion systems such as rooftop or self-contained units with an evaporator or condenser in the air duct system — the volume of the smallest occupied space served by the duct system determines the permissible quantity of refrigerant.

If the building is unpartitioned and multistory, use the volume of the smallest occupied story.

If the duct system serves several enclosed spaces, use the total volume of all spaces served in which the airflow cannot be reduced below 25% of design. Include the plenum area, too — but only that portion of the plenum that is continuous and part of the building's return air system.

System Application Requirements

For clarity, Table 2 and the accompanying "Refrigerant Quantity Rules" from ASHRAE Standard 15–1994 (which cover <u>all</u> combinations of refrigerant types and system classifications) are reprinted in their entirety on page 10. However, **the rest of this manual focuses on low-probability systems that contain either A1 or B1 refrigerants**. This subgroup encompasses most of the refrigeration systems that require a mechanical equipment room.

ASHRAE Standard 15–1994 lists a number of "general" (applicable to all systems) and "special" (system-specific) requirements and restrictions that must be met to provide for safe refrigerant use. General requirements for low-probability systems that use A1 or B1 refrigerants are addressed later in this manual; "Refrigerant Quantity Rule 4" — see *Table 2 (page 10)* — dictates the specific requirements for these systems. Rule 4 states:

> "When the quantity of refrigerant in any system exceeds Table 1 amounts, all refrigerant-containing parts, except piping and those parts outside the building, shall be installed in a machinery room constructed in accordance with the provisions of (ASHRAE Standard 15–1994 Section) 8.13." [from Section 7.4.2]

The next section of this manual, *Machinery Room Design,* reviews the application requirements presented in ASHRAE Standard 15–1994, Section 8.13, and discusses how those requirements can be met.

Table 2
System Application Requirements (See Inset Below for Rules)

Refrigerant Group	System Probability	Occupancy Classification: Institutional	Occupancy Classification: Public Assembly, Residential, Commercial, Large Mercantile	Occupancy Classification: Industrial
A1	High	Rule 2	Rule 1	Rule 3
	Low	Rule 4	Rule 4	Rule 4
A2	High	Rule 5	Rule 5	Rule 3
	Low	Rule 7	Rule 7	Rule 7
A3	High	Rule 9	Rule 9	Rule 3
	Low	Rule 9	Rule 9	Rule 7
B1	High	Rules 2 and 6	Rules 1 and 6	Rule 3
	Low	Rule 4	Rule 4	Rule 4
B2	High	Rules 5 and 6	Rules 5 and 6	Rule 3
	Low	Rule 7	Rule 7	Rule 7
B3	High	Rule 9	Rule 9	Rule 3
	Low	Rule 9	Rule 9	Rule 7

"Refrigerant Quantity Rules" from ANSI/ASHRAE Standard 15–1994, Section 7.4.2

NOTE: All table and section references cited here refer to tables and sections of ASHRAE Standard 15–1994. Refrigerant quantities shown in Table 1 of Standard 15 are provided in ***Table 1 (page 5)*** *of this manual.*

1. The quantity of refrigerant in each system shall be limited as listed in Table 1. The quantity of refrigerant per occupied space shall be the maximum amount of refrigerant that will leak into the occupied space at any one time, based on a leak from any single independent refrigeration circuit.

2. The quantity of refrigerant in each system is limited to 50% of the amount listed in Table 1. EXCEPTION: **Rule 1** applies in kitchens, laboratories, and mortuaries. If any portion of a refrigerant system containing more than one pound of refrigerant (except R–744) is in a room with a flame-sustaining device, this device shall be provided with a hood to exhaust combustion products to the open air. Otherwise **Rules 5** and **6** shall be followed.

3. For refrigerating systems of 100 horsepower (74.6 kW) or less, when the quantity of refrigerant in each system exceeds Table 1 quantities, the rules for commercial occupancy shall apply unless the following occurs:

   (a) occupancies containing machinery are separated from other occupancies by tight construction and with tight-fitting doors;

   (b) access by authorized personnel is controlled;

   (c) personnel density and means of egress are in compliance with local building codes;

   (d) detectors (refrigerant, oxygen, etc.,) are located in areas where refrigerant vapor from a leak will be concentrated so as to provide warning at a concentration not exceeding the refrigerant(s) TLV–TWA (detectors are not required for ammonia due to its self-alarming character);

   (e) when the quantity of refrigerant, except refrigerants in Groups A1 and B1, exceeds Table 1 quantities, no flame-producing device or hot surface above 800° F (426.7° C) shall be permitted; and

   (f) when the quantity of refrigerant, except Groups A1 and B1 and ammonia, exceeds Table 1 quantities, the area shall be classified as a hazardous location and all electrical equipment shall conform to the requirements of Class 1, Division 2, of the National Electrical Code.

   For refrigerating systems of greater than 100 hp (74.6 kW), the refrigerated work area shall comply with items **(a)** through **(f)** and the separate room housing compressors and related equipment shall comply with **Rule 8**.

4. When the quantity of refrigerant in any system exceeds Table 1 amounts, all refrigerant-containing parts, except piping and those parts outside the building, shall be installed in a machinery room constructed in accordance with the provisions of 8.13.

5. Refrigerant quantities and types of systems shall be limited as shown in Table 3.

6. Applications involving air conditioning for human comfort are not allowed.

7. When the quantity of refrigerant in any system exceeds Table 1 amounts, all refrigerant-containing parts, except piping and those parts outside the building, shall be installed in a machinery room constructed in accordance with the provisions of 8.14 with limitations on refrigerant quantities as follows:

   550 lb (250 kg) — Institutional
   No limit except Rule 8 — Public Assembly and Large Mercantile
   No limit except Rule 8 — Residential
   No limit except Rule 8 — Commercial
   No limit except Rule 8 — Industrial

   Otherwise, **Rule 5** limits the amount of Group A2, A3, B2 or B3 refrigerant in the system.

8. When the quantity of refrigerant in any system exceeds Table 1 amounts, all refrigerant-containing parts except piping, low-side components, condensers, and parts outside the building shall be installed in a machinery room constructed in accordance with the provisions of 8.13. In addition, refrigerants of Groups A2, A3, B2 and B3 shall meet the following requirements:

   (a) The special machinery room requirements of 8.14 shall apply.

   (b) Except for ammonia systems, amounts of refrigerant exceeding 1100 lb (500 kg) shall be approved by the authority having jurisdiction.

9. Use of these refrigerants is prohibited except in laboratories in commercial occupancies. Only unit systems containing not more than 6.6 lb (3 kg) of Group A3 or B3 refrigerant shall be used unless the laboratory is occupied by less than one person per 100 ft^2 (9.3 m^2) of floor area, in which case the requirements of industrial occupancies shall apply. Note that 7.4.1 permits a refrigerant charge of 6.6 lb (3 kg) or less (any refrigerant) of any system meeting the requirements of this rule.

Machinery Room Design

This section discusses the machinery room design requirements for refrigeration systems subject to "Refrigerant Quantity Rule 4" of ANSI/ASHRAE Standard 15–1994 (see inset, page 10). **Rule 4 applies to all low-probability systems — in all occupancy classifications — that use either an A1 or B1 refrigerant.** As in the preceding chapter, direct excerpts from the Standard are indented for easy identification. The explanations that accompany them suggest how to interpret and implement ASHRAE Standard 15–1994 for compliance with that code.

☞ *The room housing the refrigeration system has a number of aliases: it's commonly referred to as an "equipment room," a "mechanical room," a "mechanical equipment room" (MER) and a "refrigeration room." ASHRAE reserves the term* ***machinery room*** *for those rooms that meet the requirements of Sections 8.13 and 8.14 of ANSI/ASHRAE Standard 15–1994, and are designed to house compressors and pressure vessels. As used in this manual, however, the preceding aliases are synonymous with ASHRAE's definition of a machinery room.*

☞ *The terms "chiller" and "refrigeration system" are also used synonymously throughout this chapter.*

Chiller Placement

Chiller (refrigeration system) placement in the equipment room depends on a number of factors including:

- ❑ access for service work,
- ❑ proximity to other equipment in the room, and ...
- ❑ local ventilation airflow.

Clearances specified in the chiller submittal data are the minimum values required for normal operation, maintenance, service and repair of the equipment. ASHRAE Standard 15–1994 further requires clear head room of 7.25 feet below equipment situated over passageways, and reminds the designer to contact the presiding regulatory agency for other requirements. Collectively, these clearances generally determine chiller placement. Another important consideration, however, is the airflow pattern that results from interaction of the ventilation system with equipment in the room.

Place the chillers between the ventilation inlet and outlet, and orient them to avoid creating stagnant areas. *Figure 3* shows two possible configurations for a multiple-chiller equipment room. Positioning the chillers as shown in Arrangement A provides good air movement, while Arrangement B inhibits airflow between the chillers.

Figure 3
Multiple-Chiller Machinery Room Layouts

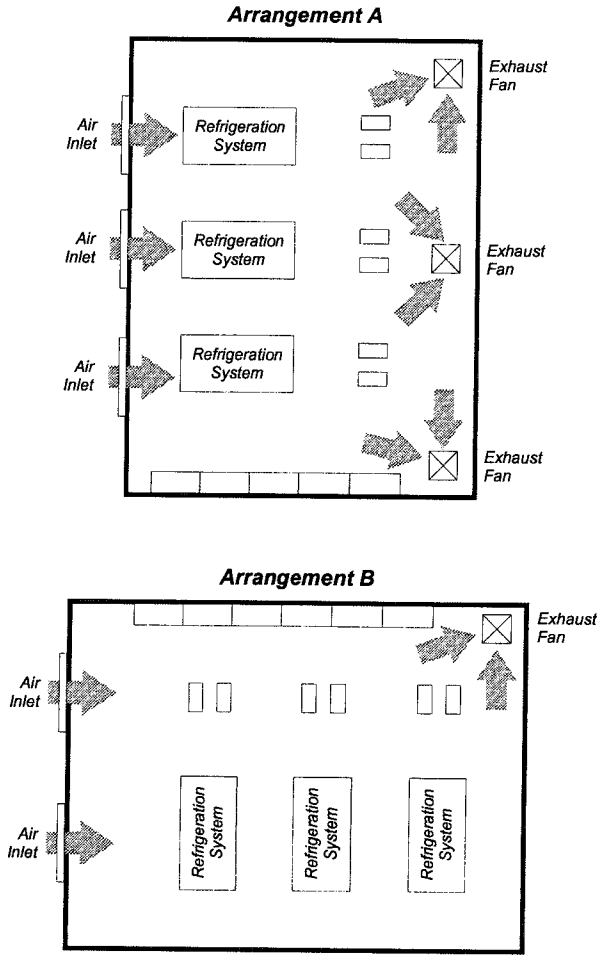

Ventilation

Volume Requirements

ANSI/ASHRAE Standard 15–1994 specifies the required volume of ventilation air — delivered either **naturally** or **mechanically** — based on the location of the equipment.

Natural Ventilation

ANSI/ASHRAE Standard 15–1994 states that:

> "When a refrigerating system is located outdoors more than 20 ft (6.1 m) from building openings and is enclosed by a penthouse, lean-to or other open structure, natural or mechanical ventilation shall be provided." [from Section 8.13.5]

To use natural ventilation, the structure must not be connected to any occupied building by any means including: doorways, pipe tunnels or electrical conduit raceways, ventilation or ductwork. When these conditions are met, the requirements for natural ventilation are:

> "The free-aperture cross section for the ventilation of a machinery room shall be at least:
>
> $F = G^{0.5}$ ($F = 0.138\ G^{0.5}$)
>
> where,
>
> F = the free opening area in square feet (square meters),
>
> G = the mass of refrigerant in pounds (kilograms) in the largest system, any part of which is located in the machinery room.
>
> "Locations of the gravity ventilation openings shall be based on the relative density of the refrigerant to air." [from Section 8.13.5]

Figure 4 shows an example of a remote mechanical equipment room (MER).

Mechanical Ventilation

Most mechanical equipment room designs don't permit the use of natural ventilation. When the refrigeration system doesn't meet the requirements just described for a natural ventilation system,

Figure 4
Remote Machinery Room

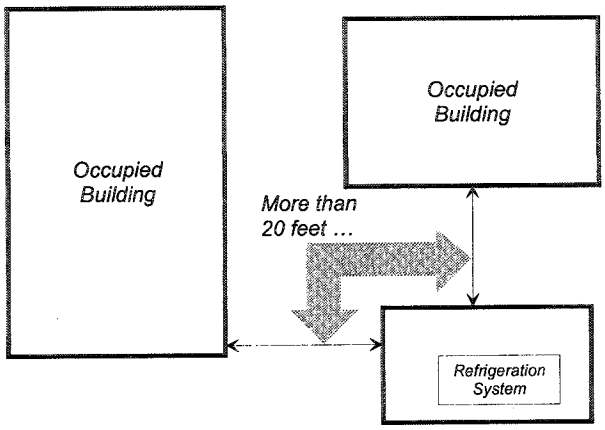

Lean-to or Other Structure with Natural Ventilation

mechanical ventilation must be provided. According to ASHRAE Standard 15–1994:

> "The mechanical ventilation required to exhaust an accumulation of refrigerant due to leaks or a rupture of the system shall be capable of removing air from the machinery room in not less than the following quantity:
>
> $Q = 100 \times G^{0.5}$ ($Q = 70 \times G^{0.5}$)
>
> where,
>
> Q = the airflow in cubic feet per minute (liters per second),
>
> G = the mass of refrigerant in pounds (kilograms) in the largest system, any part of which is located in the machinery room." [from Section 8.13.5]

"Q" represents the minimum airflow that the ventilation system must be capable of delivering to effectively exhaust "spilled" refrigerant from the room. For chillers with more than one isolated refrigeration circuit, "G" represents the amount of refrigerant in the largest circuit. According to ANSI/ASHRAE Standard 15–1994, it isn't necessary to run the ventilation system at this volume continuously, provided that:

> "A part of the refrigerating machinery room mechanical ventilation shall be:
>
> (a) operated, when occupied, to supply at least at 0.5 cfm per square foot (2.54L/s per square meter) of machinery room area or 20 cfm (9.44 L/s) per person and

(b) operable, if necessary for operator comfort, at a volume required to maintain a maximum temperature rise of 18° F (10° C) based on all of the heat-producing machinery in the room." [from Section 8.13.5]

In effect, ANSI/ASHRAE Standard 15–1994 defines two distinct mechanical ventilation rates for an equipment room:

- **Normal ventilation** at a rate of 0.5 cfm/sq ft is required whenever the equipment room is occupied. (A higher ventilation rate may be necessary if there's a source of excessive heat in the room.) To accomplish this, run the fan continuously, start it automatically with a motion detector, or provide a fan switch near the equipment room entrance(s).

  If you provide a switch, accompany it with a sign or other prompt to indicate the need for ventilation during occupancy.

- **Alarm ventilation** at a rate based on the mass of refrigerant in the chiller system is required whenever the refrigerant monitor indicates a build-up of refrigerant in the equipment room. Use the monitor's alarm contacts to automatically initiate ventilation at this volume. (See "Monitor Inputs and Outputs" on pages 24–25.) A switch for manual initiation is also suggested; locate it outside the main entrance to the equipment room.

Compliance with ASHRAE Standard 15–1994 can be achieved by providing one ventilation system that operates at the higher of the two rates, and is triggered by both occupancy and monitor alarm. However, when the alarm ventilation rate is significantly higher than the normal ventilation rate, consider using a fan system capable of operating at two distinct rates via multiple fans or modulation devices such as multi- or variable-speed drives.

☞ *Be sure to compensate for refrigerant gas density — which is usually 3 to 5 times heavier than air — when sizing a ventilation system for the alarm rate. This is particularly important for refrigerants with boiling points below the ambient temperature because a spill of liquid refrigerant or rupture of a vessel will quickly release a large quantity of refrigerant gas into the equipment room.*

Vent Locations

Locations for the ventilation system intake and discharge must be properly positioned to provide efficient equipment room ventilation. ASHRAE Standard 15–1994 addresses this requirement in a general manner, stating:

> "... Provision shall be made for inlet air to replace that being exhausted. Openings for inlet air shall be positioned to avoid recirculation. Air supply and exhaust ducts to the machinery room shall serve no other area. The discharge of the air shall be to the outdoors in such a manner as not to cause a nuisance or danger." [from Section 8.13.4]

Don't overlook the fundamental requirements contained in this excerpt ...

First, **the equipment room ventilation system must be separate from the systems that provide ventilation to other parts of the building**. In other words, the fans and ductwork that ventilate the equipment room must not supply or use air from any other part of the building, and the discharge must not interfere with any fresh air intakes. Because some fans may not run continuously, it's important to locate each fan's discharge where it won't be inadvertently blocked when the fan is off. Also, outdoor air used for ventilation must be properly conditioned to avoid potential equipment damage from wide, abrupt temperature swings or freezing temperatures.

Second, **the exhaust fan must remove refrigerant from the equipment room**. To remove heavier-than-air refrigerants, locate the exhaust fan inlet near the equipment (if possible) and close to the floor rather than at ceiling height. *Why?* Refrigerant released in an equipment room sinks to the floor and fills the room from the bottom up unless disturbed by air turbulence. Maximum protection for equipment room occupants is provided when the exhaust-fan inlet is situated:

- below the normal breathing zone, as shown in *Figure 5 (page 14).*
- near the potential source(s) of a refrigerant leak, and ...
- away from the outdoor air intake to create a "sweeping" airflow pattern that draws outdoor air across the refrigeration equipment to the exhaust fan.

When equipment room exhaust fans serve a cooling or smoke removal function, they're usually installed in the ceiling since both heat and smoke rise. However, if the ventilation system also exhausts

Figure 5
Suggested Exhaust Fan Location

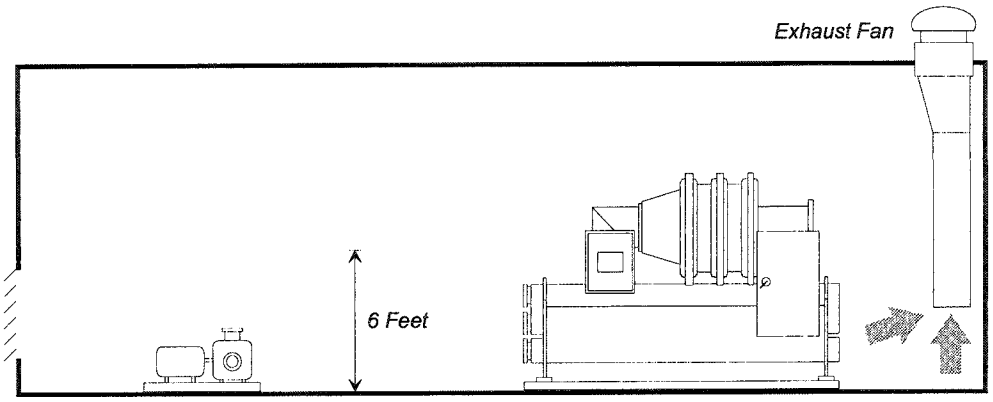

Figure 6
Dual-Purpose Machinery-Room Ventilation System

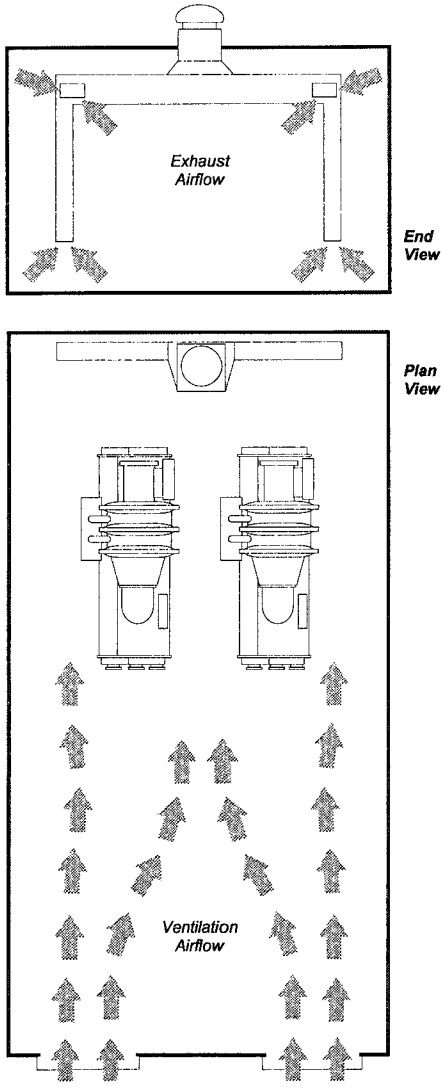

"spilled" refrigerant, make provisions for inlets at both floor and ceiling levels. To accomplish this, it's best to provide separate fans.

☞ *Separate ceiling and floor-level fans can be operated together to provide the total ventilation volume needed for refrigerant removal. For greatest removal efficiency, the floor-level fan should be capable of meeting the calculated alarm ventilation rate.*

It's possible to use a ducted fan with inlets at floor and ceiling as shown in *Figure 6.* If this arrangement is used, however, be sure to account for refrigerant vapor density. Flow control dampers may be required. If used, they should be designed and controlled to provide maximum exhaust from the floor-level inlet on detection of a refrigerant alarm condition.

Figure 7 (page 15) illustrates the layout of an actual equipment room situated in the corner of a building. As shown in Arrangement A, the ventilation system includes six louvered service doors along one wall (outdoor air inlet) and an exhaust fan mounted 4 feet above the floor in an adjacent wall. Continuous ventilation is provided at the alarm ventilation rate. While this arrangement provides adequate air movement past the chiller, notice that it also creates a stagnant area in one corner of the room. Ducting the exhaust fan inlet across the opposite wall, as depicted by Arrangement B, provides better airflow across the entire equipment room.

Figure 7
Correcting an Existing Ventilation System Arrangement

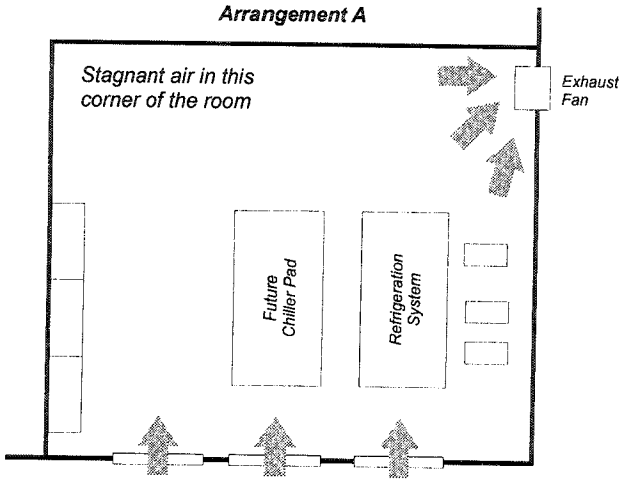

Air Inlet Via 3 Pairs of Louvered Doors

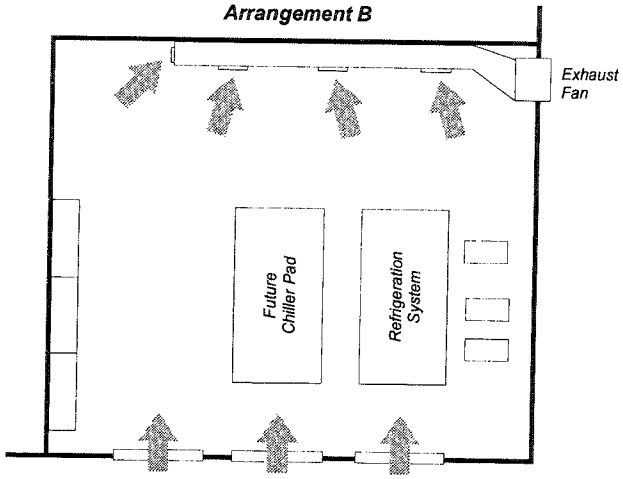

Air Inlet Via 3 Pairs of Louvered Doors

Doors and Passageways

ASHRAE Standard 15–1994 requires that:

> "Each refrigerating machinery room shall have a tight-fitting door or doors opening outward, self-closing if they open into the building, and adequate in number to ensure freedom for persons to escape in an emergency. With the exception of access doors and panels in air ducts and air-handling units conforming to (Section) 8.13.7, there shall be no openings that will permit passage of escaping refrigerant to other parts of the building." [from Section 8.13.2]

With these requirements in mind, review *Figure 7* again. Generally, louvered doors would not be acceptable; but in this case, they don't lead into a walkway, and are used only as an air inlet and for service clearance. However, the local code authority should still be consulted to verify compliance.

Access

Section 11.1 of the Standard limits machinery room access to authorized personnel only. Equipment access — including ladders, platforms and unobstructed space for inspection and servicing — must be provided in accordance with applicable safety standards, as well as with the requirements of the presiding regulatory agency.

Continuous Monitoring

"Continuous monitoring" refers to the use of permanently-mounted, constantly-operating area monitor(s). Equipment rooms are often unoccupied for extended periods. By detecting and alarming a build-up of refrigerant, application of a continuous monitor assures personnel that the room is free of this hazard.

According to ANSI/ASHRAE Standard 15–1994, all equipment rooms containing refrigerants must be equipped with continuous monitors that will automatically signal the existence of an alarm condition and start the ventilation system:

> "Each machinery room shall contain a detector located in an area where refrigerant from a leak will concentrate, which shall actuate an alarm and mechanical ventilation in accordance with (Section) 8.13.4 at a value not greater than the corresponding TLV®–TWA (or toxicity measure consistent therewith)." [from Section 8.13.2]

> "Detector(s), alarm(s), and mechanical ventilating systems shall be tested in accordance with manufacturers' specifications and the requirements of the jurisdiction having authority." [from Section 11.7.3]

As a demonstration of the Standard's intent to "specify safe ... operation of refrigerating systems," these excerpts apply to all refrigerants in all safety

groups, and to all equipment rooms that house refrigerating equipment and are designed in accordance with Section 8.13. Of course, an added benefit of using a monitor is early detection of refrigerant leaks — ensuring less refrigerant loss if a leak develops.

It's important to note that ASHRAE Standard 15–1994 doesn't require a "refrigerant vapor monitor" — it simply calls for a "detector" that "actuate(s) an alarm and mechanical ventilation ... at a value not greater than the corresponding TLV®–TWA." This phrasing deliberately specifies the **required function** of the "detector," not the technology used to accomplish it. Note, too, that the requirement to alarm at the TLV–TWA (Threshold Limit Value – Time Weighted Average) means that the "detector" must be able to discern relatively small amounts of refrigerant. With today's technology, this requirement is best met with a **compound-specific vapor monitor**; see page 23.

While ASHRAE Standard 15–1994 clearly defines the need for equipment room monitoring, it leaves a number of important issues to the designer's discretion. For example, the designer must decide what type of monitor to use, how many are needed, and where to install them.

General guidelines for applying a refrigerant monitor immediately follow. The next chapter, "Machinery Room Monitors" on pages 23–26, discusses monitor types and characteristics, and suggests how they can be used to provide a safe equipment room environment. For more detailed information, consult the documentation provided by the monitor manufacturer.

Refrigerant Monitor Application

☞ *This information is presented to help determine the quantity and placement of refrigerant monitors in an equipment room. It is not a substitute for instructions provided by the monitor manufacturer.*

Placement

The only instruction ASHRAE Standard 15–1994 provides for determining where to locate the refrigerant monitor is "... in an area where refrigerant from a leak will concentrate." It is necessarily vague given the countless possible mechanical equipment room layouts.

Fundamental to selecting an appropriate site for monitor mounting is the primary motive for its installation: **occupant safety**. Since equipment room occupants are most likely to be exposed to refrigerants through inhalation, proper monitor placement requires that the designer:

- ❑ determine the airflow pattern in the room, and ...
- ❑ account for the refrigerant vapor's density.

Some refrigeration equipment manufacturers offer a unit-mounted refrigerant monitor as an option. In this case, the refrigerant monitor is factory-installed on the chiller as part of the control system, and is prepiped to an appropriate sampling point. Multipoint sampling options allow other areas of the equipment room to be monitored. Aside from the obvious advantage of reduced installation costs, information gathered from the monitor can be passed to a building automation system (BAS) as part of the chiller data, eliminating the need for separate hard-wired points.

☞ *"Sampling point" refers to the location where the sample is drawn; it coincides with the monitor's location unless a sampling line is added. A "sampling line" is simply a length of tubing (usually copper) that runs from the monitor to the sampling point.*

Elevation

Position the sampling point about 18 inches above the floor. Since all commonly-used halocarbon refrigerants are three to five times heavier than air, locating the sampling point below the normal "breathing zone" (i.e., 5 feet above the floor) provides occupants an added margin of safety.

Plan Location

With a continuous stream of outdoor air flowing across the refrigeration system components, the sampling point is best positioned between the refrigeration system and room exhaust. See *Figure 8*, Arrangement A.

If ventilation is intermittent — or if the direction of airflow isn't obvious — position the sampling point close to the refrigeration system, and between the refrigeration system and entry door. For example, place the sampling point close to the perimeter of a single chiller, between two chillers, or at the center chiller in three-chiller applications.

Figure 8
Suggested Refrigerant Sampling-Point Placement

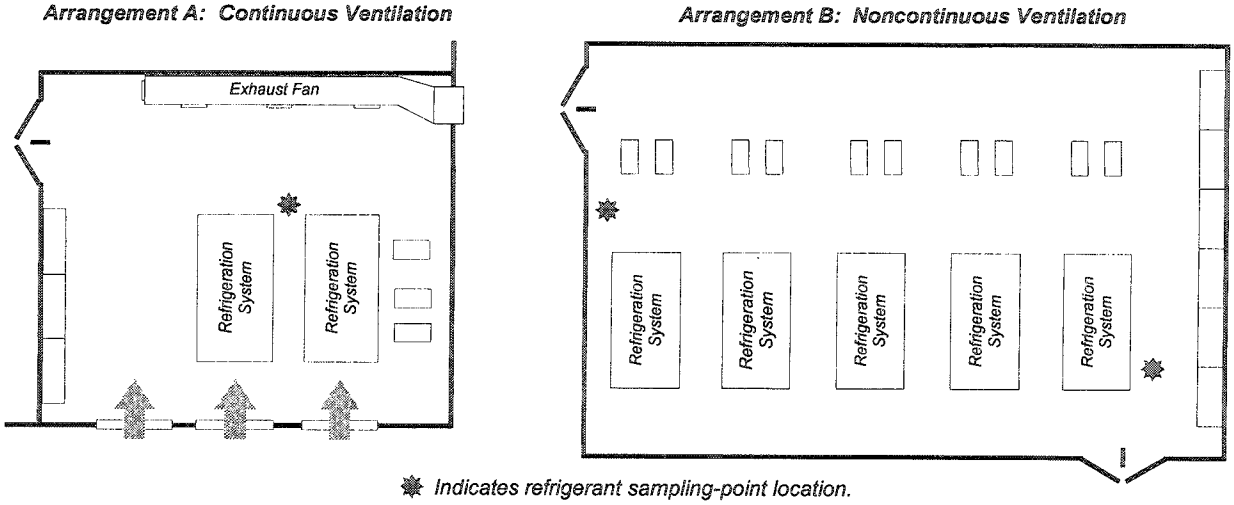

✹ *Indicates refrigerant sampling-point location.*

How Many ...

As worded, Section 8.13.2 of ANSI/ASHRAE Standard 15–1994 indicates that any "refrigerating machinery room" must contain "a detector." But is a single refrigerant monitor enough to ensure occupant safety? *Not necessarily.*

One refrigerant monitor is usually adequate for applications with three (or fewer) chillers — provided the chillers are aligned for good airflow, as shown in Arrangement A of *Figure 8*.

Systems with four to six chillers generally require two refrigerant sampling points if installed in an equipment room with either intermittent ventilation or an indeterminate direction of airflow. Sample at opposite corners of the chiller group; see *Figure 8*, Arrangement B. As a general rule, **the distance between any refrigeration system and a refrigerant sampling point should not exceed 50 feet.**

Multiple sampling points are also recommended if the equipment room is large or has multiple levels. (See *Figure 11* on page 26.) Low areas that could be occupied — such as stairwells, pits or trenches — demand dedicated sampling points, too. *Why?* Since it's heavier than air, refrigerant released to the space will sink to the floor and quickly spread. Pits and other low areas are likely to fill with refrigerant before a sampling point conventionally mounted 18 inches above the floor detects the build-up.

☞ *If an equipment room design requires several sampling points for adequate refrigerant monitoring, it may be more cost-effective to use a single monitor capable of checking refrigerant concentrations at multiple sampling points rather than several single-channel monitors.* *See "Multichannel Scanners" on page 25.*

Open-Flame Devices

Refrigerants exposed to combustion often break down into products harmful to humans and corrosive to machinery. To avoid both of these hazards, ASHRAE Standard 15–1994 strictly prohibits the use of open-flame devices in equipment rooms that house refrigerating machinery:

> "No open flames that use combustion air from the machinery room shall be installed where any refrigerant is used. The use of matches, lighters, halide leak detectors, and similar devices shall not be considered a violation of 8.13.6."
> [from Section 8.13.6]

The Standard then goes on to describe two conditions under which combustion equipment can be located in a refrigerating machinery room:

(a) "combustion air is ducted from outside the machinery room and sealed in such a manner

as to prevent any refrigerant leakage from entering the combustion chamber, or

(b) "a refrigerant vapor detector is employed to automatically shut down the combustion process in the event of refrigerant leakage." [from Section 8.13.6]

When combustion equipment, such as a boiler or direct-fired absorption machine, is designed to accept intake ductwork, the best solution may be *Condition (a):* duct the combustion air from outside the machinery room directly to the equipment. This strategy separates combustion air requirements from ventilation needs, and avoids shutting down the combustion equipment if there's a refrigerant leak or nuisance alarm.

Condition (b) describes a simple, cost-effective method for complying with ANSI/ASHRAE Standard 15–1994, and is especially useful in retrofit and replacement installations. A high-quality, compound-specific monitor — properly located — can avoid nuisance shutdowns that might be otherwise be triggered by paints, cleaning agents and other chemicals.

Pressure-Relief Piping

"Refrigerating systems shall be protected by a pressure-relief device or other approved means to safely relieve pressure due to fire or other abnormal conditions." [from Section 9.4.1]

So begins Section 9.4, entitled "Pressure-Relief Protection," of ANSI/ASHRAE Standard 15–1994. Along with these general requirements, this part of the Standard specifically describes when pressure-relief devices are needed and how to size them.

Manufacturers of packaged refrigeration systems, as well as of major components for "built-up" systems, usually engineer pressure-relief devices in their equipment designs. Despite this convenience, it's still important to verify (per ANSI/ASHRAE Standard 15–1994) that all pressure vessels are adequately protected against rupture.

Once the equipment is installed, each rupture device must be piped to a safe location in accordance with the following guidelines from ANSI/ASHRAE Standard 15–1994:

"Pressure-relief devices and fusible plugs on any system containing a Group A3 or B3 refrigerant; on any system containing more than 6.6 lb (3 kg) of a Group A2, B1, or B2 refrigerant; and on any system containing more than 110 lb (50 kg) of a Group A1 refrigerant shall discharge to the atmosphere at a location not less than 15 ft (4.57 m) above the adjoining ground level and not less than 20 ft (6.1 m) from any window, ventilation opening, or exit in any building. The discharge shall be terminated in a manner that will prevent the discharged refrigerant from being sprayed directly on personnel in the vicinity and foreign material or debris from entering the discharge piping. Discharge piping connected to the discharge side of a fusible plug or rupture member shall have provisions to prevent plugging the pipe in the event the fusible plug or rupture member functions." [from Section 9.7.8]

Although the requirements stated in this section are quite self-explanatory, their importance should not be taken lightly. Improper termination of the discharge pipe, for example, could result in the entry of rain: its accumulation may cause the relief device to malfunction or, in the case of a rupture disk, the pressure may cause the disk to rupture, allowing water to enter the chiller. Remember, too, that a large quantity of fluid and/or vapor may be discharged when a relief device functions ... an improper discharge location can result in personal injury and property damage.

Refrigerant compatibility with the materials used in relief-device piping and joints is critical. Commonly used and accepted materials include steel or DWV copper pipe. PVC piping can also be used if the related adhesives have been tested for refrigerant compatibility. Flexible connection devices used for vibration isolation must be compatible with the vented refrigerant, too; a flexible stainless steel pump connector (or its equivalent) is recommended.

Discharge Line Sizing

ANSI/ASHRAE Standard 15–1994 provides information on discharge line sizing in Sections 9.7.8.4 and 9.7.8.5. Section 9.7.8.4 reads:

"The size of the discharge pipe from a pressure-relief device or fusible plug shall not be less than the outlet size of the pressure-relief device or fusible plug. Where outlets of two or more relief devices or

fusible plugs are connected to a common line or header, the effect of back pressure that will be developed when more than one relief device or fusible plug operates shall be considered. The sizing of the common discharge header downstream from each of the two or more relief devices or fusible plugs that are expected to operate simultaneously shall be based on the sum of their outlet areas with due allowance for the pressure drop in all downstream sections."

The guidance presented in this excerpt can be summarized as follows:

1 Discharge pipe diameter must at least equal the size of the pressure-relief device. It may need to be larger depending on the length of the discharge pipe.

2 Two or more relief devices can be piped together, but the discharge line must be sized to handle all devices that could relieve at the same time.

3 When two or more relief devices are piped together, the common discharge line must be at least as large as the sum of the outlet areas of all upstream relief devices — perhaps larger if required by the pressure drop.

For a Single Chiller ...
To determine how far a discharge pipe of a given diameter can be run, ANSI/ASHRAE Standard 15–1994 provides the following equation:

$$L = \frac{9 \times P^2 \times d^5}{16 \times C_r^2} \qquad \left(L = \frac{1.95 \times 10^{-14} \times P^2 \times d^5}{16 \times C_r^2} \right)$$

where,

C_r = rated discharge capacity as stamped on the device by the manufacturer in pounds of air per minute (kg/s),

d = internal diameter of pipe in inches (mm),

L = length of discharge pipe in feet (m).

P = For relief valves and rupture disks: P = (rated pressure, psig x 1.10) + 14.7 [P = (rated pressure, kPa gage x 1.10) + 101.33]. For fusible plugs: P = (rated pressure, psig x 1.10) + 14.7 [P = (rated pressure, kPa gage x 1.10) + 101.33], which "equals the absolute saturation pressure corresponding to the stamped temperature melting point of the fusible plug or the critical pressure of the refrigerant used, whichever is smaller, psia (kPa)." [from Sections 9.7.8.5 and 9.7.7]

To apply this equation, calculate P using the rated pressure of the relief device. Then determine the value of C_r from the relief device or the manufacturer's literature. Starting with the **exact inside diameter of a pipe that matches the diameter of the relief device**, calculate the discharge pipe length *(L)*. Verify that the calculated pipe length is long enough to span the distance between the chiller and the outdoor termination. If L is too short, recalculate it using the next larger pipe size. Repeat this process until L is long enough.

For Multiple Chillers ...
A similar process (and equation) determines the maximum allowable pipe run for multiple units sharing a common discharge line. This time, however:

- ❑ the area provided by the discharge pipe diameter must be greater than the sum of all relief devices connected upstream, and ...
- ❑ the C_r value used to calculate L is the sum of all C_r values for upstream relief devices.

Example: Consider three low-pressure centrifugal chillers situated as shown in *Figure 9 (page 20)*. Each chiller has a 3-inch rupture disk with a discharge rating *(C_r)* of 64. The discharge line runs from one unit to the next, then another 20 feet to its outdoor termination.

First, calculate the allowable length for a 3-inch discharge pipe. (The exact inside diameter of this pipe is 3.068 inches.):

$$P = (15\,psig \times 1.10) + 14.7 = 31.2\,psi$$

$$L = \frac{9 \times 31.2^2 \times 3.068^5}{16 \times 64^2} = 36.3\,ft$$

As the preceding calculations show, the maximum allowable run for our 3-inch pipe is 36.3 feet. Since the distance between Chiller #1 and the junction with Chiller #2 is only 21 feet, 3-inch pipe is suitable for that portion of the run.

To properly size the common discharge line between Chiller #2 and Chiller #3, L must be recalculated using the sum of the C_r values. While P remains unchanged, the area of the common discharge pipe

Figure 9
Multiple Units Sharing a Common Pressure-Relief Discharge Line

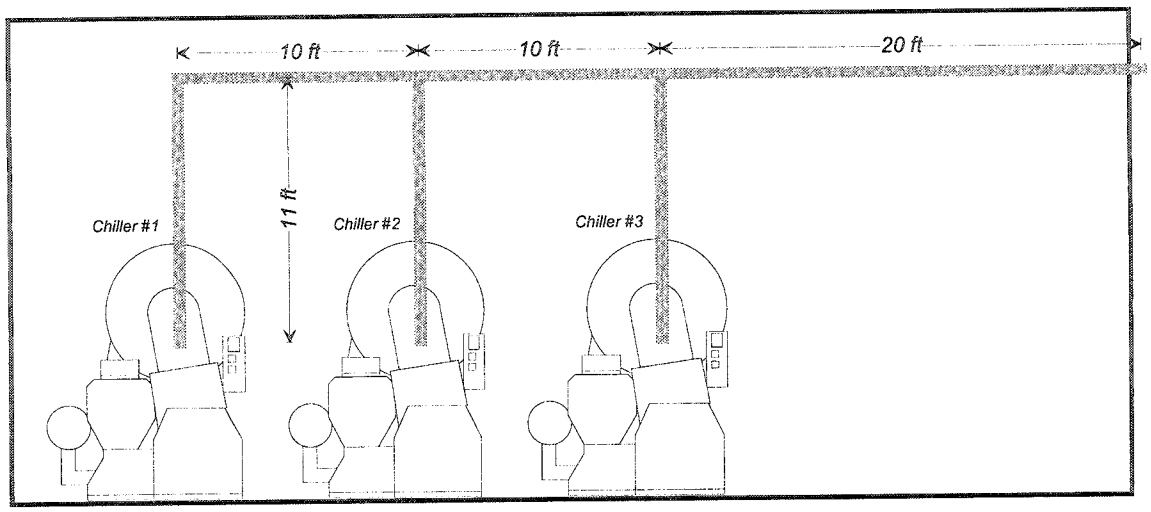

must at least equal the area of all upstream rupture disks. The area of a single disk is:

$$Area = \Pi\, r^2 = 3.14 \times 1.5^2 = 7.07 \text{ sq in.}$$

Since the pipe section must accommodate the combined area of two rupture disks (14.14 sq in.), a 4-inch pipe — with an area of 3.14 x 2^2 or 12.6 sq in. — isn't large enough ... but a 5-inch pipe (with an area of 3.14 x 2.5^2 or 19.6 sq in.) is. To calculate its allowable length, *L*:

$$L = \frac{9 \times 31.2^2 \times 5.047^5}{16 \times 128^2} = 109 \text{ ft}$$

The 109-foot restriction for a 5-inch pipe can easily accommodate the required length of run between Chiller #2 and Chiller #3.

At the final junction (i.e., between Chiller #3 and the outdoor termination), the pipe must increase based on the sum of the areas of all three rupture disks (21.2 in^2). The area of a 6-inch pipe is 3.14 x 3^2 = 28.3 in^2 which is greater than 21.2 in^2 and, therefore, is large enough. To calculate its allowable length, *L*:

$$L = \frac{9 \times 31.2^2 \times 6.065^5}{16 \times 192^2} = 122 \text{ ft}$$

This is plenty of length to reach the edge of the building.

"But What If": In the preceding example, the "equivalent area" rule determined the required discharge pipe diameter. Another determinant of pipe size is the length of run. If our example equipment room had only one chiller, and the distance between it and the outdoor termination was 51 feet, the 3-inch pipe (with its 36.3-ft limit) would be too small. A 4-inch pipe, on the other hand, will easily work:

$$L = \frac{9 \times 31.2^2 \times 4.026^5}{16 \times 64^2} = 141 \text{ ft}$$

Drip Leg

Equip each discharge pipe with a drip leg capable of holding up to one gallon of liquid (i.e., 1 gallon = 231 cu in.) Use the following equation to find the length *(L)*, in inches, of pipe required for the drip leg ...

$$L = 294 / d^2$$

... where *d* is the inside diameter, in inches, of the pipe. *Figure 10 (page 21)* illustrates a properly piped refrigerant vent. To simplify draining, provide a standard 1/4" FL x 1/4" NPT capped refrigerant service valve. Accumulated liquid should be removed from the drip leg at least once every six months as a part of regular chiller maintenance. Use appropriate refrigerant handling procedures when draining the vent.

Figure 10
Suggested Refrigerant Vent Piping

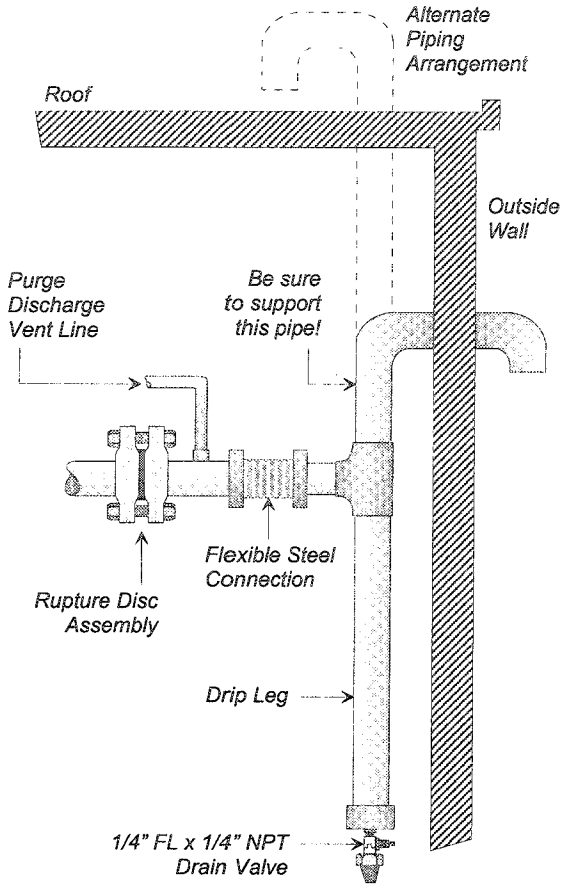

Purge Discharge

Section 9.4, "Pressure-Relief Protection," of ASHRAE Standard 15–1994 also addresses the purge discharge. According to the Standard, purge units used to remove noncondensible gas from the refrigeration system must have discharge lines piped according to the requirements for relief piping. Section 8.16 states:

> "The discharge of purge systems shall be governed by the same rules as pressure-relief devices and fusible plugs (see [Section] 9.7.8) and shall be piped in conjunction with these devices."

Generally, the most convenient way to properly exhaust the purge discharge to the atmosphere is to route it into the relief-device discharge pipe. The purge discharge line must not contain any liquid traps, and should slope away from the purge unit to prevent liquid from collecting there. Connect the purge discharge pipe on the chiller side of any vibration isolation as shown in *Figure 10*. Consult the purge manufacturer for proper sizing of the purge discharge line.

Limit purge-related refrigerant loss as much as possible to minimize refrigerant discharge to the atmosphere and avoid the expense of replacing lost refrigerant. To accomplish this:

1 Choose a purge unit with a low refrigerant-to-noncondensible-gas discharge ratio that can operate while the chiller is off.

2 Routinely monitor the refrigeration system for leaks and promptly repair any that are found. Routine logging of purge operation and chiller run time provides an excellent indicator of system integrity.

3 Choose a purge unit that contains a safety system to prevent excessive purging due to malfunction or a large leak.

General Requirements

A number of important issues — applicable to all refrigeration systems and all refrigerant types — are addressed in Section 11, "General Requirements," of ANSI/ASHRAE Standard 15–1994. While these requirements do not directly affect equipment room "design," they're an integral part of safe equipment room environments. For your convenience, that section is reproduced in its entirety in the inset on page 22.

Note that Subsection 11.6, "Self-Contained Breathing Apparatus," refers to the **refrigerant quantity rules** provided in Section 7.4, "System Application Requirements," of the Standard. (See page 10 of this manual.) All refrigeration systems large enough to require a mechanical equipment room require the use of two self-contained breathing apparatus (SCBA), regardless of the type of refrigerant used.

An SCBA provides a personal air source that protects the wearer from exposure to a contaminated equipment room. Classified by the duration of its air supply, SCBA gear is generally rated for 30 minutes. ANSI/ASHRAE Standard 15–1994's requirement of such a device is intended to permit trained personnel to safely enter the equipment room and correct a malfunction. For this reason, it is important to

position the SCBA's outside but near the mechanical equipment room entrance.

Since it's unlikely that the SCBA will be used very often, it should be stored in a bright-colored, durable case to protect it from dirt and damage, and maintain its visibility. Use of SCBA's is governed by the Occupational Safety and Health Administration (OSHA); contact OSHA for a list of pertinent regulations and requirements.

11. General Requirements (from ANSI/ASHRAE Standard 15–1994)

11.1 Refrigerating Machinery Rooms. Access to the refrigerating machinery room shall be restricted to authorized personnel.

11.2 Signs and Identification

11.2.1 Installation Identification. Each refrigerating system erected on the premises shall be provided with a legible permanent sign, securely attached and easily accessible, indicating

(a) the name and address of the installer,
(b) the refrigerant number and amount refrigerant,
(c) the lubricant identity and amount, and
(d) the field test pressure applied.

11.2.2 Controls and Piping Identification. Systems containing more than 110 lb (50 kg) of refrigerant shall be provided with durable signs having letters not less than 0.5 in. (12.7 mm) in height, designating:

(a) valves or switches for controlling the refrigerant flow, the ventilation, and the refrigeration compressor(s), and
(b) the kind of refrigerant or secondary coolant contained in exposed piping outside the machinery room. Valves or piping adjacent to valves shall be identified in accord with ANSI A13.1, "Scheme for Identification of Piping Systems."

11.2.3 Changes in Refrigerant or Lubricant. When the kind of refrigerant or lubricant is changed as provided in 5.3, there shall be new signs to identify the changes in accordance with 11.2.1.

11.3 Charging, Withdrawal and Disposition of Refrigerants. No service containers shall be left connected to a system except while charging or withdrawing refrigerant. Refrigerants withdrawn from refrigerating systems shall be transferred to approved containers only. Except for discharge of pressure-relief devices and fusible plugs, incidental releases due to leaks, purging of noncondensibles, draining oil, and other routine operating or maintenance procedures, no refrigerant shall be discharged to the atmosphere or to locations such as a sewer, river, stream, or lake.

11.4 Containers. Containers used for refrigerants withdrawn from a refrigerating system shall be as prescribed in the pertinent regulations of the Department of Transportation and shall be carefully weighed each time they are used for this purpose, and containers shall not be filled in excess of the permissible filling weight.

11.5 Storing Refrigerant. The total amount of refrigerant stored in a machinery room in all containers not provided with relief valves and piping in accordance with (Section) 9.7 shall not exceed 330 lb (150 kg). Refrigerant shall be stored in approved storage containers. Additional quantities of refrigerant shall be stored in an approved storage facility.

11.6 Self-Contained Breathing Apparatus (SCBA). When a machinery room is required per the rules of (Section) 7.4, at least one approved self-contained breathing apparatus, suitable for the refrigerant used, shall be located outside of, but close to, the machinery room. A second, backup, self-contained breathing apparatus shall also be provided.

11.7 Maintenance. Refrigerating systems shall be maintained by the user in a clean condition, free from accumulations of oily dirt, waste, and other debris, and shall be kept accessible at all times.

11.7.1 Stop Valves. Stop valves connecting refrigerant-containing parts to atmosphere during shipping, testing, operating, servicing, or standby conditions shall be capped, plugged, blanked, or locked closed when not in use.

11.7.2 Calibration of Pressure-Measuring Equipment. Pressure-measuring equipment shall be checked for accuracy and calibrated prior to test and immediately after every occasion of unusually high (full scale) pressure, either by comparison with master gages or a dead-weight pressure gage tester over the operating range of the equipment.

11.7.3 Periodic Tests. Detector(s), alarm(s), and mechanical ventilating systems shall be tested in accordance with manufactures' specifications and the requirements of the jurisdiction having authority.

11.8 Responsibility for Operation and Emergency Shutdown. It shall be the duty of the person in charge of the premises on which a refrigerating system containing more than 55 lb (25 kg) of refrigerant is installed to provide a schematic drawing or panel giving directions to the operation of the system at a location that is convenient to the operators of the equipment.

Emergency shutdown procedures, including precautions to be observed in case of a breakdown or leak, shall be displayed on a conspicuous card located as near as possible to the refrigerant compressor. These precautions shall address:

(a) instructions for shutting down the system in case of emergency;
(b) the name, address, and day and night telephone numbers for obtaining service; and,
(c) the name, address, and telephone number of all corporate, local, state, and federal agencies to be contacted as required in the event of a reportable incident.

When a refrigerating machinery room is used, the emergency procedures shall be posted outside the room, immediately adjacent to each door.

Machinery Room Monitors

Various monitors are available for refrigerant detection applications. Differences in their designs and operating characteristics determine what applications best suit each monitor.

This section attempts to help the designer select an appropriate monitor for a particular equipment room application. To do this, it characterizes various monitor types and discusses how monitors can be used to provide a safe equipment room environment.

What ASHRAE 15-1994 Requires

ANSI/ASHRAE Standard 15–1994 mandates a refrigerant detector for all applications of refrigeration systems that require separate equipment rooms (see page 15). It further specifies that the monitor must activate an alarm if it detects a refrigerant concentration less than or equal to the corresponding TLV®–TWA (Threshold Limit Value–Time Weighted Average). Since these values can be quite small, the sensitivity of the "detector" must be appropriate to the refrigerant in use.

Any equipment room that contains more than one type of refrigeration system must satisfy the individual requirements of each system. For example, if an equipment room houses an R–11 chiller and an R–123 chiller, it must also contain either:

- ❑ one refrigerant "detector" capable of sensing both types of refrigerant; or ...
- ❑ two compound-specific monitors — one for R–11 and one for R–123.

Types of Monitors

At the heart of a refrigerant monitor is the sensor. Sensor technology plays a major role in determining the operating characteristics of the monitor. Refrigerant monitors typically fall into three general categories based on the type of sensor technology used.

Nonselective Monitors
"Detectors" of this type employ metal-oxide semiconductors or thermal ionization to detect the presence of refrigerant. Used for years in "pinpointing" leak detectors, this sensing method has a minimum sensitivity of approximately 20 to 30 ppm. However, an inability to differentiate between chemicals makes these detectors very susceptible to false alarms and severely limits their use as area monitors.

Halogen-Specific Monitors
These monitors typically use an ionization, element-type sensor that can be calibrated to respond only to the chlorine, fluorine and bromine found in refrigerants. Though more discriminating than nonselective monitors, they cannot differentiate between refrigerants. Halogen-specific monitors can be calibrated, and are accurate at concentrations as low as 10 ppm. Sensor operating life is typically one year, but may vary with exposure to refrigerant.

Compound-Specific Monitors
This type of monitor is virtually interference-free, offers the highest degree of selectivity, and is capable of detecting concentrations as low as 1 ppm. Presence of refrigerant is detected with infrared spectroscopy (long used in industrial applications), gas chromatography or photo-acoustic spectroscopy. Because they analyze the refrigerant's physical properties, these devices require less recalibration than other monitor types.

A compound-specific monitor (sometimes referred to as "refrigerant-specific") is the best choice for an equipment-room area monitor.

Choosing the Right Monitor

Regardless of sensing technology, refrigerant-vapor monitors can be divided into two broad categories: those intended for continuous duty, and those used periodically for short-term refrigerant leak detection. The operating characteristics associated with each group reflect the different purposes they serve in an equipment room environment.

"Short-term" monitors are used briefly, at regular intervals, to check a refrigeration system for leaks during preventive maintenance or troubleshooting. Consequently, a monitor used for this purpose must:

- ❑ withstand large doses of refrigerant;
- ❑ respond and clear rapidly;
- ❑ be portable; and ...
- ❑ be sensitive to the refrigerant being monitored (though not necessarily refrigerant-specific).

Compliance with the intent of ANSI/ASHRAE Standard 15–1994 — i.e., to provide a safe environment for equipment room occupants — requires installation of a **continuous monitor**. Refrigerant monitors suited for this type of duty possess:

- ❑ **refrigerant-specific sensitivity**. Less discriminating monitors can alarm if nonrefrigerant compounds such as cleaning agents or paints are detected.
- ❑ **stability over the expected operating range** of temperatures, voltages, humidities and barometric pressures. Calibration stability is a critical aspect of monitors used for continuous surveillance, and is provided by the electronic component that reads the sensor output. In general, monitor accuracy must be unaffected under all equipment room conditions.
- ❑ **low zero drift or an "auto-zeroing" capability.** To be suitable for continuous equipment-room duty, the monitor must provide a means of setting the "zero" reference point — i.e., either a very small zero drift (parts per million, ppm, between inspections) or an "auto zero" feature.
- ❑ **long service life with minimal maintenance.**
- ❑ **alarm limits that correspond to the refrigerant being monitored.**
- ❑ **outputs to signal that an alarm condition exists and start auxiliary equipment.** ANSI/ASHRAE Standard 15–1994 requires that the monitor *"actuate an alarm and mechanical ventilation"* to alert equipment room occupants that the refrigerant concentration exceeds the TLV® or AEL (acceptable exposure limit).

Monitor Inputs and Outputs

Remote Reset Input

Often, the alarm state initiated by the monitor triggers a latching alarm that requires manual reset. Some refrigerant monitors contain a remote reset input that can be used to cancel the alarm from a distance — provided the refrigerant build-up that triggered it has dispersed.

☞ *If the alarm doesn't reset, steps should be taken to assure occupant safety on entry — i.e., provide additional ventilation, don the proper personal protective equipment (respiratory protection, goggles, gloves, protective suit, boots), and use a hand-held monitor to determine the room's refrigerant concentration.*

Locate the remote reset button outside the equipment room door so that an operator can reset the alarm *before* entering the room.

Alarm Relay Output

☞ *Follow the local regulatory requirements and equipment manufacturers' alarm level recommendations when establishing alarm settings and actions. The following recommendations are based on ASHRAE Standard 15–1994 and a Trane document entitled "Low-Pressure Refrigerant Emergency Spill Procedures."*

"Single-Stage" Alarm

The alarm relay output energizes when the refrigerant concentration exceeds the preset alarm limit. **To satisfy ASHRAE Standard 15–1994, the alarm must energize at or below the TLV–TWA (or equivalent toxicity measurement) for the refrigerant in use. It must also activate an alarm and mechanical ventilation at the alarm rate.** When only one level of alarm is available, the general recommendation is to set the alarm limit at 30 ppm. This meets the TLV–TWA requirement for

most commonly used refrigerants, and provides early warning of refrigerant loss. Remote alarm indication can also be provided by connecting this relay to the building automation system (BAS).

In some cases, personal protective equipment requirements may change as refrigerant concentrations increase; a single alarm level can't signal the presence of higher refrigerant levels that require protective gear. Personnel must either check the refrigerant level (if displayed on the monitor or at a separate device), or assume the worst and don appropriate protective gear. Multiple alarm levels, on the other hand, can be used to indicate these changing requirements.

"Two-Stage" Alarm
If the monitor provides two levels of alarm, set the first level low enough to provide early leak detection (i.e., generally at 30 ppm). Alarm-rate ventilation should also be energized at this point, as well as an indicator light to notify personnel of the leak.

Set the second level of alarm to the concentration at which personal protective equipment is required for personnel in the room. This level should also notify the remote area supervisor, *and* energize an alarm indication outside the equipment room to notify personnel that the room is not safe to enter without proper personal protective equipment.

"Three-Stage" Alarm
Monitors with three levels of alarm provide greater notification flexibility. As above, the first level is set low enough to provide early leak detection; it's also used to start alarm-rate ventilation and energize an indicator to notify personnel of the leak. Alternately, alarm-rate ventilation and activation of an indicator can be performed by the second level of alarm; this allows a lower first-level setting and provides even earlier notice of a refrigerant leak. Of course, the second alarm level could, instead, be used to indicate the need for an intermediate type of personal protective equipment.

Set the third alarm level to the concentration at which personal protective equipment is required for personnel in the room. Use this level to notify the remote area supervisor, as well, and to energize an alarm indication outside the equipment room notifying personnel that the room is not safe to enter without proper personal protective gear.

Failure Relay Output

This relay energizes if the monitor malfunctions due to low airflow, circuit failure or a saturated (or absent) sensor signal. It can also indicate loss of power if these contacts are normally powered open. Use the failure relay output to visually or audibly signal the building operator that the monitor must be checked and returned to operation.

☞ *As part of monitor checkout, the operator should bring a portable detector to the equipment room to ascertain refrigerant concentration.*

Refrigerant-Monitor Analog Output

Some monitors provide a 0–10 vDC, 4–20 mA or serial signal proportional to the level of refrigerant detected. Use this output to provide a remote indication of the equipment room's refrigerant level — perhaps by "driving" a meter installed outside the equipment-room entry. The meter can help operating personnel assess the need for breathing apparatus, or whether the ventilation system successfully cleared leaked refrigerant from the room.

When connected to a building automation system, this output can alert operating personnel of a leak, initiate alarm-rate ventilation, and enable automatic logging of the equipment room's refrigerant level.

Multichannel Scanners

To adequately monitor a large refrigeration system, an equipment room with several chillers, or an equipment room with two or more levels, it may be necessary to sense refrigerant concentration at various locations. A **multichannel scanner** connected to a single monitor or a monitor with a multichannel option provides an alternative to mounting several individual monitors in the equipment room.

Typically, two or more sampling tubes are routed from the scanner to other parts of the room, as shown in *Figure 11 (page 26)*. Equipment design determines the length of each sensing-tube run and the number of "pickup" points that can be monitored.

Multichannel scanning enables the monitor to check the air sampled at each location by individually "connecting" each sampling tube to the monitor on a rotating basis.

Figure 11
Typical Multichannel Scanner Application

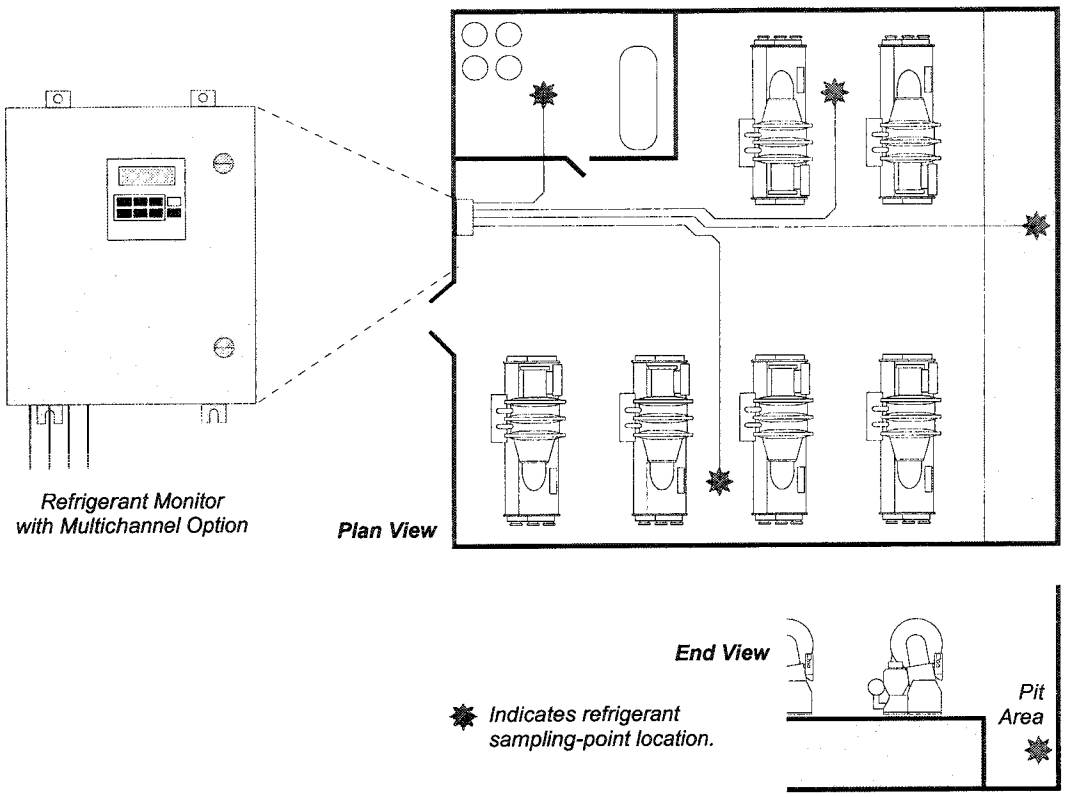

Benefits of a BAS Interface

Building owners and operators insist on efficient, documentable building performance ... the state-of-the-art energy and information management capabilities provided by a building automation system (BAS) help address this demand. Equipment-room monitoring for refrigerant build-up is a natural candidate for system-level control, and is attractive for a number of reasons:

1 **Automatic logging and documentation of refrigerant monitor readings.** Automatic trend logging of refrigerant concentrations in the equipment room:

(a) assures employees that they're working in a safe environment.

(b) confirms, in writing, that refrigerant concentrations are maintained below the applicable TLV®–TWA (or equivalent toxicity measurement).

(c) satisfies EPA-imposed regulations requiring verification of the operating procedures used to control CFC and HCFC equipment room emissions. Automated control reports offer unquestionable proof that even minute concentration levels of refrigerant have been measured and recorded.

2 **Automatic dial-out on alarm detection.** The BAS not only monitors refrigerant level and initiates necessary alarms from a central, remote location, but can also automatically dial the service contractor when an alarm occurs. In this way, a trained expert — one who can take quick and appropriate corrective action — can constantly oversee equipment room operation.

3 **Purge rate surveillance for early leak detection.** Leaks are the number one cause of refrigerant loss from refrigeration systems. While the refrigerant vapor monitor can detect a leak before a significant amount of refrigerant is lost, a BAS can provide an even earlier indication by monitoring, logging and plotting operation of the chiller's purge unit. It can also display a diagnostic message for the operator if the purge rate exceeds a preset limit.

Sample Equipment Room Design Specification

☞ *The following specification sections are written to demonstrate wording that could be used to bring equipment room and chiller specifications into compliance with ANSI/ASHRAE Standard 15–1994 and ANSI/ASHRAE Standard 34–1992.* ***It applies only to low-probability refrigeration systems that contain Group A1 or B1 refrigerants and require a machinery room.*** *If used as a guide for specifying and designing an equipment room, check local codes to avoid any conflicts or deficiencies.*

PART 1 GENERAL

1.01 Section Includes

A. Entrance Door Requirements

B. Equipment Room Ventilation

C. Refrigerant Detectors

D. Remote Refrigerant Alarming and Equipment Shutdown

E. Chiller Plant Management

F. Self-Contained Breathing Apparatus

G. Open Flame Devices

H. Equipment Room Signs and Identification

1.02 References

A. ANSI/ASHRAE STANDARD 15–1994, "Safety Code for Mechanical Refrigeration"

B. ANSI/ASHRAE STANDARD 34–1992, "Number Designation and Safety Classification of Refrigerants"

PART 2 PRODUCTS

2.01 Summary

A. The design, installation and operation of the machinery room containing the refrigeration system shall meet ANSI/ASHRAE Standard 15–1994 as a minimum design criteria. Additional equipment and controls shall be added as required to protect the occupants of the machinery room from hazardous exposure to refrigerants. Access to the machinery room shall be restricted to authorized personnel.

2.02 Entrance Door Requirements

A. All equipment doors shall be tight-fitting and open outward. Doors leading to the building shall be self-closing. There shall be no openings to permit passage of escaping refrigerant to other parts of the building.

2.03 Equipment Room Ventilation

A. **General:** Ventilation systems that serve the machinery room must be entirely separate from other portions of the building. Air discharged from the machinery room shall be to the outdoors, and shall not cause inconvenience or danger. Sufficient inlet air shall be provided to replace the air being exhausted. Openings for air inlets shall be positioned to avoid intake of discharged air. Inlet air shall be treated as required to avoid equipment damage caused by freezing temperatures and/or large, rapid temperature swings.

Ventilation inlets and outlets for the machinery room shall be placed to provide an air sweep across refrigeration equipment. Unit spacing and positioning shall be coordinated with ventilation inlets and outlets to avoid areas of stagnation around the refrigeration equipment.

All exhaust fans used to meet the maximum ventilation rate shall have inlets located no more than 4 feet above floor level. In addition, at least 50 percent of the air used for normal ventilation shall be exhausted from less than 4 feet above floor level.

B. The ventilation system shall be capable of exhausting a build-up of refrigerant from

the machinery room at the maximum rate. The air volume required for exhausting at the maximum rate shall be _____ cfm at _____ inch static.

Or ...

B. The ventilation system shall have two speeds. It shall be capable of exhausting a build-up of refrigerant from the machinery room at the maximum rate. The normal ventilation volume shall be _____ cfm at _____ inch static. The air volume required for exhausting at the maximum rate shall be _____ cfm at _____ inch static.

C. The ventilation system shall be operated as follows:

1. When the equipment room is occupied, the ventilation system shall [operate at low speed and] supply at least 0.5 cfm per square foot of machinery room area or 20 cfm per person (whichever is greater).
2. When necessary for operator comfort, the ventilation system shall maintain a maximum temperature [rise of 18° F based on all heat-producing machinery in the room] [of 75° F].
3. If the ventilation system is not run continuously at the maximum rate, exhaust ventilation must be automatically triggered by the refrigerant monitor whenever a refrigerant concentration above the TLV®–TWA (or toxicity measurement consistent therewith) is detected in the machinery room.

Include the following section here if the mechanical contractor is supplying the refrigerant monitor. Move it to the chiller specification if the chiller manufacturer is supplying the refrigerant monitor.

2.04 Refrigerant Detector(s)

A. A minimum of one permanently-mounted, continuously-operating refrigerant vapor monitor [as supplied by the installing mechanical contractor] [as supplied by the chiller manufacturer] shall be mounted in the machinery room to detect leakage of refrigerant from locations where the refrigerant is either stored or used.

B. Multiple monitors or monitor pickup points shall be used to limit the distance between the sensor and the refrigerant source to not more than 50 feet. Pits, tunnels or trenches in the machinery room that are accessible to personnel shall also be monitored. Monitor sampling point(s) shall normally be located 18 inches above the floor in a location near the refrigerant source, and shall be situated between the refrigerant source and the exhaust fan inlet.

C. Refrigerant Monitor Performance

1. Refrigerant monitor shall be capable of detecting concentrations of 1 ppm for low-level leak detection and for insuring the safety of operators. It shall be supplied factory-calibrated for the appropriate refrigerant.
2. All monitors shall be capable of continuously monitoring the machinery room for the refrigerant used in the system. Monitor design and construction shall be compatible with temperature, humidity, barometric pressure and voltage fluctuations of the machinery room operating environment.

---

3. The refrigerant monitor shall provide an alarm relay output which energizes when the monitor detects a refrigerant level at or above the TLV–TWA (or toxicity measurement consistent therewith). This relay shall be used to initiate the following events:

---

   a. Energize an alarm consistent with other warning devices in the building to signal machinery room occupants.

   Or ...

   a. Energize a light on or near the monitoring device; a second light, outside the machinery room

entrance, shall be used to provide an additional warning. [(If the machinery room is not checked on a routine basis,) A signal shall be sent to a remote location where it will be detected by a building operator.]

---

b. Energize all exhaust fans required to achieve the maximum rate of exhaust. Exhaust fans shall remain energized until manually deactivated by an operator.

Or ...

3. The refrigerant vapor monitor shall provide three levels of alarm with a relay output for each level:

a. The first level of alarm shall be set at ____ ppm (at or below the TLV®–TWA, or toxicity measurement consistent therewith) of the refrigerant in use; and shall energize the ventilation equipment at the maximum rate and illuminate an indicator light.

b. The second level of alarm shall be set at ____ ppm; and shall energize an alarm indication outside the equipment room.

c. The third level of alarm shall be set at ____ ppm; and shall energize an audible and visual alarm that signals evacuation of the equipment room, and notifies personnel that the room is not safe to enter without proper personal protective gear. An alarm signal shall also be sent to a remote area supervisor to indicate that a possible large leak or spill is occurring or has occurred.

---

4. The refrigerant vapor monitor shall provide a failure relay output, separate from those described above, that energizes when the monitor detects a fault in its operation. Examples of faults include low airflow through the monitor, circuit failure, and a saturated or absent sensor signal. This output shall signal an alarm condition to the building operator so that the monitor can be checked and returned to operation.

5. Operating instructions that detail the calibration and maintenance requirements of the refrigerant vapor monitor in use shall be accessible to machinery room maintenance personnel. Calibration and maintenance of the refrigerant monitor shall be included in the general maintenance procedures for the machinery room.

---

*The following section is **optional**. Include it in this section of the specification if it is the mechanical contractor's responsibility. Move it to the chiller specification if the chiller manufacturer is supplying the chiller plant management.*

2.05 Remote Refrigerant Alarming and Equipment Shutdown

A. A control panel that contains the following items shall be located at all main entrances to the machinery room:

1. A blue light that is energized by "alarm level 1."

2. A yellow light that is energized by "alarm level 2."

3. A red light that is energized by "alarm level 3."

4. A momentary push-button used to reset the alarm at the monitor. This shall only reset a past alarm condition and shall not disable the monitor. The alarm must reactivate within 10 seconds if the alarm condition still exists in the machinery room.

5. A separate shutdown switch for every chiller or refrigeration system compressor.

---

*The following section is **optional**. Include it in this section of the specification if it is the mechanical contractor's responsibility. Move it to the chiller specification if the chiller manufacturer is supplying the chiller plant management.*

2.06 Chiller Plant Management

A. When the building is equipped with a Building Automation System (BAS), the following features shall be provided at the central control:

1. The BAS shall track the level of refrigerant sensed by the monitor. This signal shall be used to generate an electronic log of the refrigerant level in the machinery room. Any increase in that level shall trigger an informational diagnostic indicating that the refrigeration system should be checked for leaks.
2. The BAS shall monitor the alarm status of the refrigerant monitor and provide an alarm condition for each of the following:
   a. Monitor malfunction.
   b. Refrigerant alarm triggered at the TLV®–TWA (or equivalent toxicity measurement) for the refrigerant in use.
   c. Refrigerant alarm triggered at 3 times the TLV–TWA (or equivalent toxicity measurement) for the refrigerant in use.
3. The BAS shall be tied to the machinery room ventilation system to provide control of both normal and maximum-rate ventilation of the machinery room. This control shall parallel the primary control of the fans provided by the refrigerant monitor.

2.07 Self-Contained Breathing Apparatus

A. Two approved self-contained breathing apparatus (SCBA) [as supplied by the installing mechanical contractor] [as supplied by the chiller manufacturer] shall be mounted outside of, but close to, the machinery room by the installing mechanical contractor.

2.08 Open Flame Devices

A. No open flames or apparatus to produce an open flame installed in the machinery room shall use combustion air from the machinery room except as permitted below.

B. Open flame devices (e.g. boilers or direct-fired chillers) shall be permitted when:

1. Combustion air to the device is from outside the machinery room so that no air from the machinery room can enter the device; or ...
2. The device is tied to a refrigerant monitor such that when the monitor alarms, the device is shut down.

2.09 Equipment Room Signs and Identification

A. Each refrigerating system erected on the premises shall be provided with an easily legible, permanent sign that is securely attached, easily accessible and indicates the following:

1. Name and address of the installer.
2. Proper name and amount of refrigerant.
3. Lubricant identity and amount.
4. Field test pressure applied.

B. Systems that contain more than 110 lbs of refrigerant shall be provided with durable signs that have letters not less than 0.5-inch in height and identify the following:

1. Valves or switches that control refrigerant flow.
2. Switches that control ventilation.
3. Switches that control operation of the refrigeration compressor(s).
4. The kind of refrigerant or secondary coolant contained in the exposed piping outside the machinery room.
5. Valves or piping adjacent to valves shall be identified in accord with ANSI A13.1, "Scheme for Identification of Piping Systems."

(End of Specification)

Appendix A —

Indirect Open-Spray Systems

Indirect open-spray systems (air washers) are occasionally used in industrial processes — most commonly those associated with textile manufacturing. **Air washers are considered "low-probability" systems provided the water pressure in the chiller evaporator is *always* greater than the refrigerant pressure in that same vessel.** Under this condition, it's almost impossible for refrigerant to enter the process air stream.

This appendix discusses how to design an indirect open-spray system that uses R–123 centrifugal chillers, and complies with the criteria established for low-probability systems in ANSI/ASHRAE Standard 15–1994 and ANSI/ASHRAE Standard 34–1992.

Temperature/Pressure Relationships

Table A–1 shows the temperature/pressure characteristics of saturated HCFC–123. Notice that it boils at 83° F under atmospheric pressure. As long as the evaporator water temperature is below 83° F, there's no chance of violating the "low probability" criterion — i.e., refrigerant pressure will never exceed water pressure at the evaporator.

Table A–2 shows the conversion between gauge pressure (psi) and water column pressure (ft H_2O). The pressure-relief device on all standard Trane centrifugal HCFC-123 chillers is designed to relieve at 15 psi. Any system water pressure greater than 15 psi is almost certain to exceed the evaporator refrigerant pressure. Therefore, any system with a

Table A–1
Temperature/Pressure Characteristics of Saturated HCFC–123

Temperature	*Pressure*
40° F	*18.2 in. Hg vac*
50° F	*15.0 in. Hg vac*
60° F	*11.2 in. Hg vac*
70° F	*6.6 in. Hg vac*
80° F	*1.1 in. Hg vac*
83.0° F (boiling point)	*0 in. Hg vac*
90° F	*2.6 psi*
100° F	*6.3 psi*
110° F	*10.5 psi*
119.2° F	*15.0 psi*

Table A–2
Gauge-Pressure-(PSI)-to-Water-Column-Pressure-(FT) Conversion

Gauge Pressure	*Water Column Pressure*
0 psi	*0 ft H_2O*
2 psi	*4.6 ft H_2O*
4 psi	*9.2 ft H_2O*
6 psi	*13.9 ft H_2O*
8 psi	*18.5 ft H_2O*
10 psi	*23.1 ft H_2O*
12 psi	*27.7 ft H_2O*
14 psi	*32.3 ft H_2O*
15 psi	*34.7 ft H_2O*

static hydraulic head of at least 34.7 feet at the evaporator guarantees low-probability system status.

Figure A–1 illustrates a typical chilled-water air washer system. Base the design of such a system on one of the following premises to assure its "low probability" classification:

- ❑ **Static (at rest) hydraulic head equals or exceeds 34.7 feet.** Many such systems meet this criteria by virtue of the physical location of the chilled water system components. In these cases, no special configurations are needed.
- ❑ **When the "natural" static head is less than 34.7 feet, add a standpipe or expansion tank to the chilled water supply riser.** While this arrangement is static and doesn't require external controls, a check valve *is* needed at the chilled water pump discharge to prevent reverse drain-down when the system is at rest. See *Figure A–2 (page A–3).* If an expansion tank is used, set the automatic pressurizing valve to maintain 15 psi at the chiller evaporator.
- ❑ **Use a special low-pressure relief valve (disc) to reduce the minimum required system water pressure.** For example, a 10-psi relief valve can be used to lower the required static head from 34.7 feet to 23.1 feet. This also lowers the maximum evaporator equilibrium temperature at which refrigerant venting occurs to 108.8° F, but this temperature is still well above that which could be reasonably expected in a normal environment.
- ❑ **Operate the chilled water pump to produce a dynamic head greater than 15 psi at the evaporator.** The system's low-probability status can be maintained simply by starting the chilled water pump whenever the evaporator leaving-water temperature exceeds the refrigerant saturation temperature associated with the static hydraulic head. For example:

  (a) If the air washer has a static head of zero when at rest, control the chilled water pump to start whenever the evaporator's leaving-water temperature exceeds 83° F. At this saturation temperature, HCFC–123 develops a vapor pressure of 0.0 psi.

  (b) If the air washer's piping configuration results in a static head of 18 feet when the system is at rest, control the chilled water pump to start whenever the evaporator's leaving-water

Figure A–1
Typical Chilled-Water Air Washer System

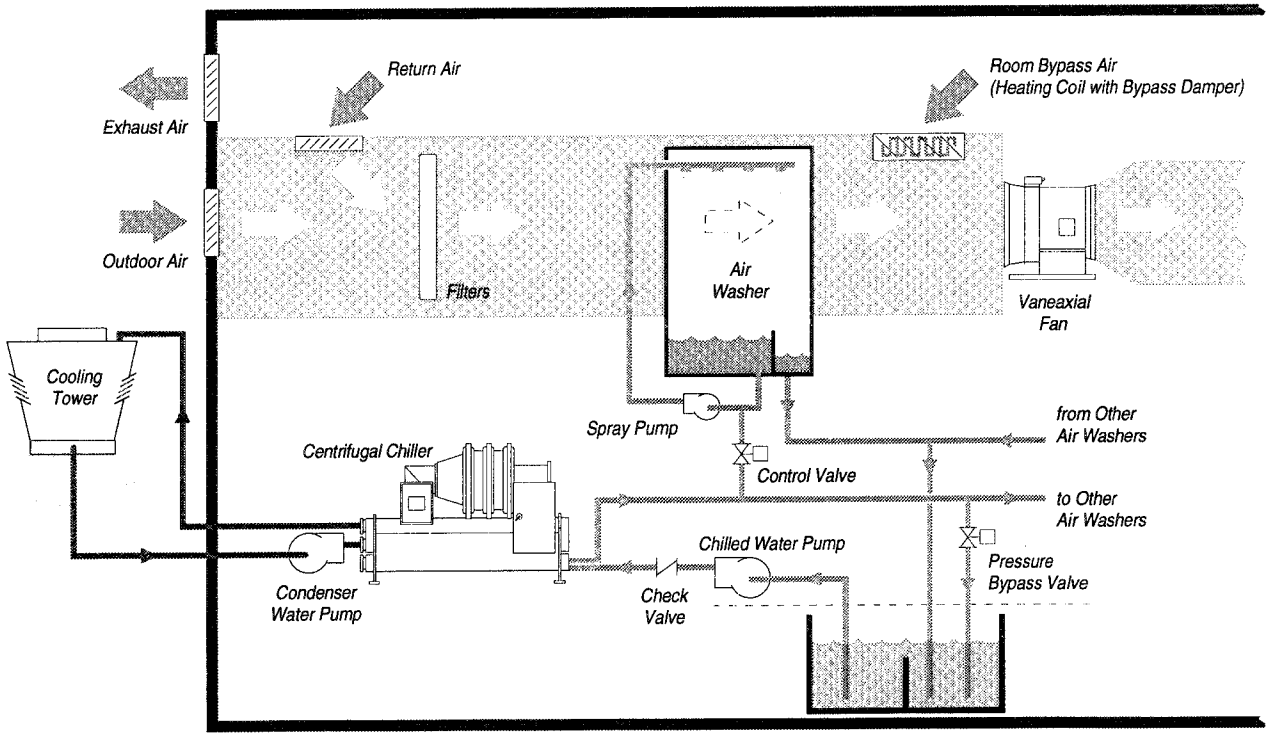

temperature exceeds 103.6° F. This control point is determined by converting the static head of 18 feet into 7.79 psi (1.0 psi = 2.31 ft H_2O), then calculating the equivalent saturation temperature of HCFC–123 at 7.79 psi (i.e., 103.6° F).

Pump-induced pressurization is easy to implement: it depends only on the action of a two-position chilled-water-temperature thermostat. In the closed position, the thermostat starts the chilled water pump; it also energizes an alarm light or message to notify operators of this event.

☞ *As a control medium, water temperature is preferred over refrigerant pressure because it allows the use of a more robust, less expensive controller.*

Further Assurance ...

In practice, it's unlikely that refrigerant could ever leak through the chilled water loop into the process air stream. For it to do so, several improbable events must occur simultaneously:

1 *A significant leak must develop in an evaporator tube.* Evaporator tube leaks are not only rare, but easily detected, too — i.e., the presence of water in the refrigerant triggers immediate operation of the chiller's purge monitoring station.

2 *Refrigerant pressure must significantly exceed evaporator pressure.* This condition can only occur when the evaporator water temperature is highly elevated — usually well above the normal plant ambient, especially when the plant is occupied and in operation.

3 *Refrigerant must be in its vapor state to escape into the process air stream.* This could only occur while the air washer is operating, when the chilled water contacts air. Since the air washer always functions as a cooler, chilled water temperatures in the washer rarely exceed 55° F ... well below the 83° F boiling point of HCFC–123.

Figure A–2
Typical Chilled-Water Air Washer System with Expansion Tank (for Applications with "Natural" Static Hydraulic Head of <34.7 Ft)

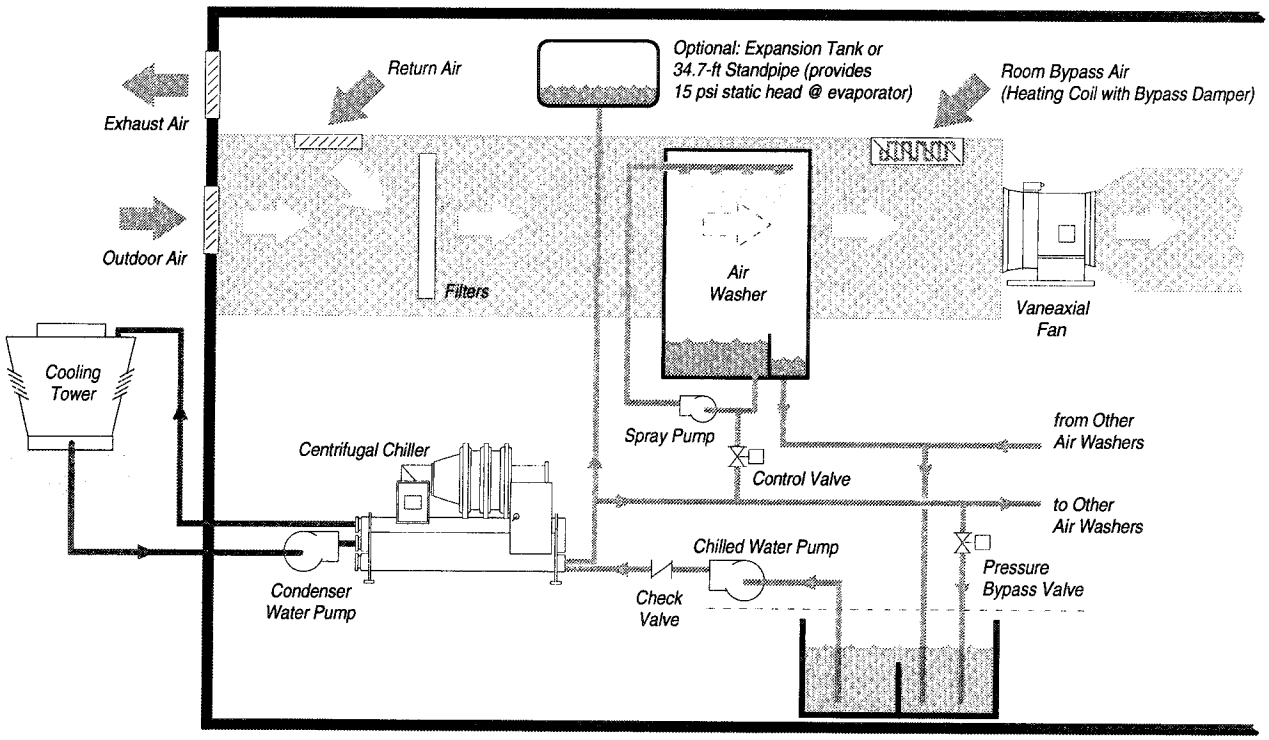

Refrigerant Containment

Of greater safety and economic concern is the entire issue of refrigerant containment. Use of "low-probability" systems doesn't address this issue: this classification refers only to the likelihood and consequences of a refrigerant leak.

Refrigerant containment can only be achieved through proper equipment design, manufacture, installation and maintenance. Therefore, effective leak *prevention* requires that members of the HVAC community:

- ❑ design for minimum leak opportunities (e.g., use hermetic construction, avoid flare fittings wherever possible, construct welds correctly and use proper materials);
- ❑ design for manufacturability;
- ❑ assure manufacturing quality;
- ❑ use low-pressure refrigerants (i.e., to permit application of near-zero emission purge/ monitoring systems); and ...
- ❑ practice leak prevention and refrigerant containment maintenance procedures. For example, monitor purge system operation with an automation system (e.g., a Tracer® or Tracer Summit™ building management system); fix leaks if and when they occur; and follow the maintenance procedures suggested by the chiller manufacturer.

For additional information on refrigerant containment, refer to ASHRAE Guideline 3–1990, "Reducing Emission of Fully Halogenated Chlorofluorocarbon (CFC) Refrigerants in Refrigeration and Air Conditioning Equipment and Applications."

Appendix B —

How Much Refrigerant per Occupied Space?

To determine if your HVAC system meets the requirements of the *Refrigerant Quantity Rules* in ANSI/ASHRAE Standard 15–1994, you must first identify which rules apply ... and to do that, you must:

1 Identify the refrigeration system's **safety group classification**.

2 Determine the **occupancy classification** of the room that houses the refrigeration system.

3 Determine the **system probability** classification of the refrigeration system.

4 Based on the determinations made in the preceding steps, **use Table 2 of the Standard** (reproduced on page 10 of this manual) to identify the applicable *Refrigerant Quantity Rules* found in Section 7.4.

When an applicable rule refers to a Table 1 refrigerant quantity, you must then determine the amount of refrigerant per 1,000 cu ft of occupied space for the proposed system. And to do *that,* you must determine how much refrigerant the largest single chiller — or largest refrigeration circuit — contains, then calculate the volume of the occupied space. Different calculations must be used for unventilated and ventilated spaces.

Unventilated Occupied Spaces

When the room that houses the refrigeration equipment is unventilated, the occupied volume is simply the volume of the room. In the case of a PTAC unit in a hotel room, the volume of the occupied space equals the hotel room's volume.

Similarly, for a chiller located indoors, the volume of the occupied space again equals the room's volume. However, if the amount (lbs) of refrigerant per 1,000 cu ft of room volume exceeds the limit set in Table 1 — and it typically does — the room must be converted to a "machinery room" per Section 11, and is no longer considered an "occupied space."

Ventilated Occupied Spaces

The term "ventilated space" applies when a refrigeration system's evaporator or condenser is located within the duct system, as is the case in direct expansion (DX) systems. For such systems, the "occupied space" comprises the entire space served by the duct system, *with these restrictions:*

- ❑ Any space in which the airflow can be reduced below 25% of design must be omitted from the total occupied space volume; **and** ...
- ❑ Plenum space cannot be included unless it is continuous, and part of the return air system.

For example, let's assume the following:

> *A 20-ton packaged cooling-only rooftop air conditioner with variable air volume (VAV) control serves the small office building shown in Figure B–1 (page B–2). The unit contains two 10-ton refrigeration circuits, each of which holds 20 lbs of R-22. VAV boxes with a 25% minimum flow setting deliver supply air to all rooms except the conference room, which is served by a VAV box with a minimum flow setting of 0%. An open plenum provides the return air path to the unit.*
>
> *The building's occupied spaces have 9-ft ceilings with an 18-in. plenum above them. This plenum is interrupted over the mechanical room where the walls extend from the floor slab to the roof.*

Based on this information, we can deduce that the relevant safety group classification is **A1**, that it's a

Figure B–1
Example Small Office Building

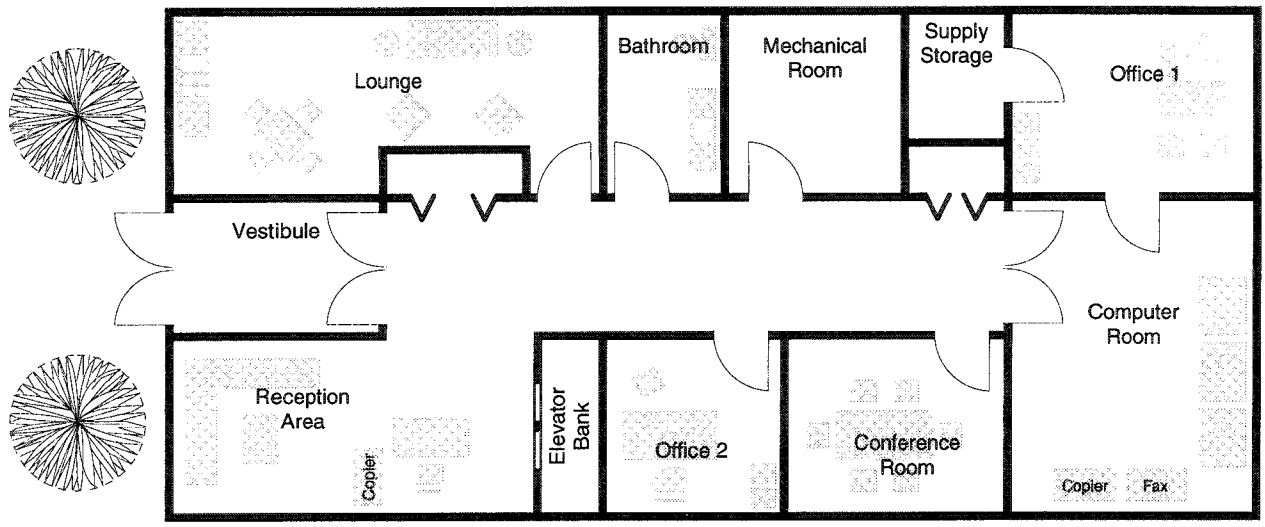

commercial occupancy, and that it's a **high-probability** system. With these facts, Table 2 of the Standard tells us that *Refrigerant Quantity Rule 1* describes the relevant system application requirements. Rule 1, in turn, states that the allowable refrigerant quantity is limited to the value shown in Table 1 — i.e., 9.4 lbs per 1,000 cu ft of occupied space.

To find the total occupied-space volume, calculate the volume of each occupied room and add the resulting values:

Lounge	*15' x 50' x 9'*	=	*6,750 cu ft*
Office 1	*15' x 30' x 9'*	=	*4,050 cu ft*
Bathroom	*15' x 18' x 9'*	=	*2,430 cu ft*
Computer Room	*15' x 25' x 9'*	=	*3,375 cu ft*
Office 2	*15' x 15' x 9'*	=	*2,025 cu ft*
Reception Area	*15' x 45' x 9'*	=	*6,075 cu ft*
Continuous Plenum (less mech room, elevators)		=	*6,925 cu ft*
Total Volume		=	***31,630 cu ft***

Notice that the volumes of the unventilated spaces — the mechanical room, supply storage, vestibule and elevator bank — weren't included. The conference room was omitted as well since its airflow can be lower than 25% of design.

Having determined the volume of the occupied space, we can now calculate the quantity of refrigerant in our rooftop unit for every 1,000 cut ft of space:

$$20\ lbs \div \frac{31{,}630\ cu\ ft}{1{,}000} = \frac{0.6\ lbs}{1{,}000\ cu\ ft}$$

This value is well below the 9.4 lbs/1,000 cu ft limit set by Table 1.

The refrigerant limits listed in Table 1 can also be used to determine the minimum volume of occupied space a particular refrigeration system requires. For example, when the 9.4 lb/1,000 cu ft limit is inverted, it indicates that 106.4 cu ft of occupied space is required for each pound of R–22 in the system (i.e., 1,000 ÷ 9.4 = 106.38). Since our example rooftop unit contains 20 lbs in its "largest" circuit, the occupied space it serves must be at least 2,128 cu ft (i.e., 20 × 106.4 = 2,128).

Appendix C —

Glossary and Acronyms

accessible
easy to approach for service or use ... see also *readily accessible*

ACGIH
American Conference of Governmental Industrial Hygienists

AEL
acceptable exposure limit

ANSI
American National Standards Institute

ASHRAE
American Society of Heating, Refrigerating and Air-Conditioning Engineers

azeotropic
blends comprising multiple components of different volatilities that, when used in refrigeration cycles, do not change volumetric composition or saturation temperature as they evaporate or condense at constant pressure ... see also *zeotropic*

BAS
building automation system

blends
refrigerants consisting of mixtures of two or more different chemical compounds, often used individually as refrigerants for other applications

BOCA
Building Officials and Code Administrators

CFC
chlorofluorocarbon

corridor
an enclosed passageway that limits travel to a single path

EEL
emergency exposure limit

EPA
Environmental Protection Agency

equipment room
as used in this manual, is synonymous with **machinery room**

fractionation
a change in composition of a blend by preferential evaporation of the more volatile component(s) or condensation of the less volatile component(s)

fusible plug
a plug containing an alloy that will melt at a specified temperature and relieve pressure

halocarbon
a hydrocarbon derivative containing one or more of the halogens bromine, chlorine or fluorine; hydrogen may also be present

hydrocarbon
a compound containing only the elements hydrogen and carbon

HVAC&R
heating, ventilating, air conditioning and refrigerating

ICBO
International Conference of Building Officials

IDLH (immediately dangerous to life or health)
the maximum concentration from which unprotected persons are able to escape within 30 minutes without escape-impairing symptoms or irreversible health effects

lower flammability limit (LFL)
minimum concentration of the refrigerant that is capable of propagating a flame through a homogeneous mixture of the refrigerant and air under test conditions ... normally expressed as refrigerant percentage by volume

machinery room
a space, meeting the requirements of Section 8.13 or 8.14 of ASHRAE Standard 15–1994, that is designed to house compressors and pressure vessels

material safety data sheet (MSDS)
provides the following information about a substance: its chemical name, hazardous ingredients, physical characteristics, fire/explosion data, reactivity, health hazards, usage/handling/storage, and special protection/precautions

means of egress
a continuous and unobstructed path of travel from any point in a building or structure to a public way

MER
mechanical equipment room; as used in this manual, is synonymous with **machinery room**

NFPA
National Fire Protection Association

NIOSH
National Institute for Occupational Safety and Health

occupied space
that portion of the premises accessible to or occupied by people, excluding machinery rooms

OSHA
Occupational Safety and Health Administration

PEL
permissible exposure limit

pressure-relief device
a pressure- (not temperature-) actuated valve or rupture member designed to automatically relieve pressure in excess of its setting

readily accessible
capable of being reached safely and quickly for operation, repair and inspection without requiring those to whom ready access is required to climb over or remove obstacles or to resort to the use of portable access equipment ... see also *access*

refrigerant
the fluid used for heat transfer in a refrigerating system — i.e., the refrigerant absorbs heat and transfers it at a higher temperature and a higher pressure, usually with a phase change

SBC
Southern Building Code

SCBA
self-contained breathing apparatus

self-contained system
a complete, factory-assembled and factory-tested system that is shipped in one or more sections and has no refrigerant-containing parts that are joined in the field by other than companion or block valves

STEL
short-term exposure limit

threshold limit value (TLV®)
registered trademark of the American Conference of Governmental Industrial Hygienists ... refers to the airborne concentrations of substances and represents conditions under which it is believed that nearly all workers may be repeatedly exposed day after day without adverse health effects

threshold limit value - time-weighted average (TLV-TWA)
the time-weighted average concentration for a normal 8-hour workday and a 40-hour workweek, to which nearly all workers may be repeatedly exposed, day after day, without adverse effect

toxicity
the ability of a refrigerant to be harmful or lethal due to acute or chronic exposure by contact, inhalation or ingestion ... effects of concern include (but are not limited to) those of carcinogens, poisons, reproductive toxins, irritants, corrosives, sensitizers, hepatoxins, nephrotoxins, agents that act on the hematopoietic system, and agents that damage the lungs, skin, eyes, or mucous membranes

zeotropic
blends comprising multiple components of different volatilities that, when used in refrigeration cycles, change volumetric composition and saturation temperatures as they evaporate or condense at constant pressure ... see also *azeotropic*

Appendix D —

Index

a

absorption refrigeration system 7
acceptable exposure limit 24
  defined C–1
accessible
  defined C–1
  requirements for machinery rooms 15
  see also readily accessible
ACGIH. *See* American Conference of Governmental Industrial Hygienists
AEL. *See* acceptable exposure limit
air washer. *See* indirect open-spray system
alarm 28
alarm limits for a refrigerant leak 25, 29
alarm relay 24–??
alarm ventilation rate 13, 14
  initiated by BAS 25
  initiated by first-stage alarm 24
  see also maximum ventilation rate
American Conference of Governmental Industrial Hygienists C–1, C–2
American National Standards Institute C–1
  ANSI A13.1 22, 30
American Society of Heating, Refrigerating and Air-Conditioning Engineers 4, C–1
ammonia 2, 10
ANSI. *See* American National Standards Institute
ANSI/ASHRAE Standard 15–1994 6–7, 11, 24
  General Requirements quoted from 22
  machinery room definition C–2
  monitor requirements 24
  pressure-relief protection 18–21
  purpose of 6, 15–16, 24
  scope of 6
  steps to comply with 7–9, B–1
  see also Refrigerant Quantity Rules
ANSI/ASHRAE Standard 34–1992 4–6
  purpose of 4
  refrigerant nomenclature 4
  scope of 4
application requirements
  by refrigerant group, system probability and occupancy classification 10
  for A1 or B1 refrigerants 9
ASHRAE Addendum 3a–1992 4
ASHRAE Guideline 3–1990 4
ASHRAE. *See* American Society of Heating, Refrigerating and Air-Conditioning Engineers
automatic dial-out on alarm 26
automatic logging capability 25, 26
auto-zeroing capability 24
avoiding nuisance shutdowns 18
azeotropic
  common refrigerant blends 5, 7
  defined C–1

b

BAS. *See* building automation system
BOCA. *See* Building Officials and Code Administrators
boiler. *See* open flame device
bromine 4, 23, C–1
building automation system 16, C–1
  automatic dial-out on alarm 26
  chiller plant management suggestions 30
  for purge surveillance 26
  for remote alarm indication 25
building management system A–4
  see also building automation system
Building Officials and Code Administrators C–1

c

carbon 4, C–1
cardiac sensitization 5
centrifugal refrigeration system 2, A–1
CFC 4, 26, C–1
CFC-11. *See* Refrigerant 11
chemical names of refrigerants 4, 5
chilled water pump A–2
chiller placement
  factors affecting 11
  outdoors 12
  specifying for proper airflow 27
chiller. *See* refrigeration system
chlorine 4, 23, C–1
Class 1 refrigerants 6
  see also safety group classification
Class 2 refrigerants 6
  see also safety group classification

Class 3 refrigerants 6
see also safety group classification
Class A refrigerants 5
see also safety group classification
Class B refrigerants 6
see also safety group classification
clearances 11
combustion air 17, 18, 30
combustion equipment. *See* open flame device
commercial occupancy 7, B–2
see also occupancy classification
compound-specific monitor 16, 18, 23
compressor 7, 10, 11, C–2
condenser 9, 10, B–1
continuous ventilation
suggested refrigerant monitor placement for 17
corridor
defined C–1

d

detector. *See* refrigerant monitor
direct expansion (DX) system 8, 9, B–1
direct-fired chiller. *See* open flame device
discharge piping 18
drip leg 20
for purge units 21
sizing recommendations 18–20
documenting refrigerant concentration 26
double indirect open-spray system 8
drip leg 20
DWV copper pipe 18

e

early leak detection 26
EEL. *See* emergency exposure limit
emergency exposure limit C–1
emergency shutdown procedures 22
emergency spill procedures for low-pressure refrigerants 24
energy management with a BAS 26
entrance door requirements 15, 27
Environmental Protection Agency 26, C–1
EPA. *See* Environmental Protection Agency
equipment room. *See* machinery room
ethane-series refrigerants 5
evaporator 9, A–1, A–2, B–1
evaporator pressure A–3
evaporator tube leak A–3
exhaust fan 13
specifying requirements for 27
suggested location shown 14
suggested operation 29
expansion tank A–2

f

failure relay 25
flammability 6, 7
as basis for safety group classification 4
see also safety group classification
flow control dampers 14
fluorine 4, 23, C–1
fractionation
defined C–1
of a refrigerant blend 7
fusible plug 18, 19, 22
defined C–1

g

gas chromatography 23

h

halocarbon
defined C–1
halogen 23
halogen-specific monitor 23
handling practices for refrigerant 6
HCFC 26
HCFC-123. *See* Refrigerant 123
HCFC-22. *See* Refrigerant 22
health hazards of refrigerant 6
heat of combustion 6
helical-rotary refrigeration system 2
high-probability system B–2
defined 8
hydrocarbon
defined C–1
hydrogen 4, C–1

i

ICBO. *See* International Conference of Building Officials
IDLH (immediately dangerous to life or health) 5
defined C–1
indirect closed system 8
indirect open-spray system 8
how to design for compliance A-1–A-3
pressure-relief device for A–2
indirect vented closed system 8
industrial occupancy 8
see also occupancy classification
information management with a BAS 26
infrared spectroscopy 23
institutional occupancy 7
see also occupancy classification
intermittent ventilation
effect on refrigerant monitor placement 16
suggested refrigerant monitor placement for 17
International Conference of Building Officials C–1
ionization 23

l

leak prevention A–4
LFL. *See* lower flammability limit
local ventilation airflow 11
see also local ventilation airflow
logging refrigerant level 30
louvered doors 14, 15
lower flammability limit 5, 6
defined C–1
low-pressure refrigerant
for containment A–4
low-probability system 9
defined 8–9
indirect open-spray system as A–1

m

machinery room
access 15
defined 7, C–2
layout for multiple chillers 11
sample specification for 27–30
signs and identification suggested for 30
material safety data sheet 6, C–2
maximum ventilation rate 27
as part of machinery room specification 28
BAS control of 30
see also alarm ventilation rate
means of egress 10
defined C–2
mechanical equipment room (MER). *See* machinery room
mechanical ventilation 12–13, 15
effect of refrigerant gas density 13
equation to determine minimum airflow 12
see also ventilation system
mercantile occupancy 7
see also occupancy classification
methane-series refrigerants 5
mixed occupancy 8
see also occupancy classification
MSDS. *See* material safety data sheet
multichannel scanner 25
multispeed drive 13

n

National Electrical Code 10
National Fire Protection Association C–2
National Institute for Occupational Safety and Health C–2
natural ventilation
  stipulations for 12
  see also ventilation system
NFPA. *See* National Fire Protection Association
NIOSH. *See* National Institute for Occupational Safety and Health
nonselective monitor 23
normal breathing zone 13, 16
normal ventilation rate 13
  as part of machinery room specification 27
  BAS control of 30

o

occupancy classification 6, B–1
  classes defined 7–8
  how to determine 7–8
occupant safety 16
  steps to assure 24
Occupational Safety and Health Administration 22, C–2
occupied space
  calculating allowable refrigerant quantity for B-1–B-2
  defined 7, C–2
  determining minimum required volume of B–2
  unventilated 9, B–1
  ventilated 9, B–1
open flame device
  as part of machinery room specification 30
  machinery room restrictions for 17–18
OSHA. *See* Occupational Safety and Health Administration
outdoor air for ventilation 13
  effect on refrigerant monitor placement 16
oxygen deprivation 5

p

PEL. *See* permissible exposure limit
periodic tests 22
permissible exposure limit C–2
personal protective equipment 24
photo-acoustic spectroscopy 23
plenum 9, B–1
pressure vessel 7, 11, 18, C–2
pressure-measuring equipment 22
pressure-relief device 19, 22
  defined C–2
  for indirect open-spray system A–2
  piping two or more together 18–20
pressure-relief piping 18–21
  drip leg 20
  sizing the discharge line 18–20
process air stream A–3
public assembly occupancy 7
  see also occupancy classification
pump connector 18
purge unit A–3
  discharge line requirements 21
  monitoring operation of 26, A–4
  near-zero emission A–4
PVC pipe 18

q,r

R-11. *See* Refrigerant 11
R-22. *See* Refrigerant 22
readily accessible
  defined C–2
  see also accessible
refrigerant
  chemical names of common 5
  defined C–2
Refrigerant 11
  aliases for 4
Refrigerant 123
  gauge-to-water-column pressure conversions A–1
  temperature and pressure relationships of A–1
Refrigerant 22
  aliases for 4
  example quantity calculated for B–2
refrigerant blends C–1
  data for 5
refrigerant compatibility 18

refrigerant containers 22
refrigerant containment A–4
refrigerant monitor 28
alarm limits 29
alarm relay output 13, 24–??, 28
benefit of using 16
checkout 25
compound-specific 16, 18, 23
continuous duty 15–16, 24
determining how many to use 17
failure relay output 25, 29
halogen-specific 23
in Refrigerant Quantity Rules 10
multiple pickup points 17, 28
nonselective 23
placement 16, 17, 28
remote reset input 24
required function 16
sample specification for 28–29
sensor analog output 25
short-term or periodic duty 24
Standard 15 requirements for 23, 24
suggested performance 28
to shut down an open flame device 30
refrigerant nomenclature 4
refrigerant quantity per occupied space 10
based on ventilation method 9
data for common refrigerants 5
Refrigerant Quantity Rules
how to determine which apply 9
quoted from ANSI/ASHRAE Standard 15–1994 10
referenced 7
refrigerant saturation temperature A–2
refrigerant-sensor analog output 25
refrigerant-specific sensitivity 24
refrigeration room. *See* machinery room
refrigeration system
maintenance 20, 22
refrigeration system classification 8
see also system probability
regulatory agency 11
relief valve. *See* pressure-relief device
remote alarm and equipment shutdown 29
remote reset 24
residential occupancy 7
see also occupancy classification
respiratory protection 24
see also self-contained breathing apparatus
responsibility for operation and emergency shutdown 22
return air system 9
rooftop unit 8, 9
rupture device 18, 19

S

safety group classification B–1
how to determine 7
matrix of flammability and toxicity 6
of common refrigerants 5
SBC. *See* Southern Building Code
SCBA. *See* self-contained breathing apparatus
self-contained breathing apparatus 21, 22, C–2
as part of machinery room specification 30
self-contained system C–2
self-contained unit 9
semiconductors 23
service access 11
service contractor 26
short-term exposure limit C–2
signs and identification for machinery rooms 13, 22, 30
Southern Building Code C–2
split system 8
standpipe A–2
static head requirements for indirect open-spray system A–2
steel pipe 18
STEL. *See* short-term exposure limit
stop valve 22
storing refrigerant. 22
submittal data 11
system probability B–1
defined 8
how to determine 8–9
system-level control. *See* building automation system

T

textile manufacturing A–1
thermal ionization 23
thermostat A–3
threshold limit value 24, 30
defined C–2
see also TLV–TWA
time-weighted average C–2
see also TLV–TWA
TLV®. *See* threshold limit value
TLV–TWA 10, 15, 24, 26
as trigger for maximum ventilation 28, 29
defined 5, C–2
for alarm actuation 23

toxicity 5, 7
as basis for safety group classification 4
defined C–2
see also safety group classification
Tracer® A–4
Tracer Summit™ A–4
TWA. *See* time-weighted average

U,V,W

variable-speed drive 13
ventilation rate 27
as part of machinery room specification 27
see also alarm ventilation rate, maximum ventilation rate *and* normal ventilation rate
ventilation system 11
BAS control of 30
general requirements for 27–28
in dual-purpose applications 13–14
specifying operation of 28
vent locations 13–14
vibration isolation 18
water temperature as a control medium A–3

Z

zeotropic 7
defined C–2

Appendix E —

List of Insets, Figures and Tables

Insets

"Refrigerant Quantity Rules" from ANSI/ASHRAE Standard 15–1994, Section 7.4.2, 10

"General Requirements" from ANSI/ASHRAE Standard 15–1994, Section 11, 22

Figures

Figure 1 – ASHRAE Standard 34–1992 Refrigerant Classifications, 6

Figure 2 – Refrigeration System Classification (from ANSI/ASHRAE Standard 15–1994), 8

Figure 3 – Multiple-Chiller Machinery Room Layouts, 11

Figure 4 – Remote Machinery Room, 12

Figure 5 – Suggested Exhaust Fan Location, 14

Figure 6 – Dual-Purpose Machinery-Room Ventilation System, 14

Figure 7 – Correcting an Existing Ventilation System Arrangement, 15

Figure 8 – Suggested Refrigerant Sampling-Point Placement, 17

Figure 9 – Multiple Units Sharing a Common Pressure-Relief Discharge Line, 20

Figure 10 – Suggested Refrigerant Vent Piping, 21

Figure 11 – Typical Multichannel Scanner Application, 26

Figure A–1 – Typical Chilled-Water Air Washer System, A–2

Figure A–2 – Typical Chilled-Water Air Washer System with Expansion Tank (for Applications with "Natural" Static Hydraulic Head of <34.7 Ft), A–3

Figure B–1 – Example Small Office Building, B–2

Tables

Table 1 – Refrigerant/Refrigerant Blend Data and Safety Classifications, 5

Table 2 – System Application Requirements, 10

Table A–1 – Temperature/Pressure Characteristics of Saturated HCFC–123, A–1

Table A–2 – Gauge-Pressure-(PSI)-to-Water-Column-Pressure-(FT) Conversion, A–1

SERVICE TRAINING MANUAL

TRANE™

Reference

ANSI/TRANE WIRING SYSTEM

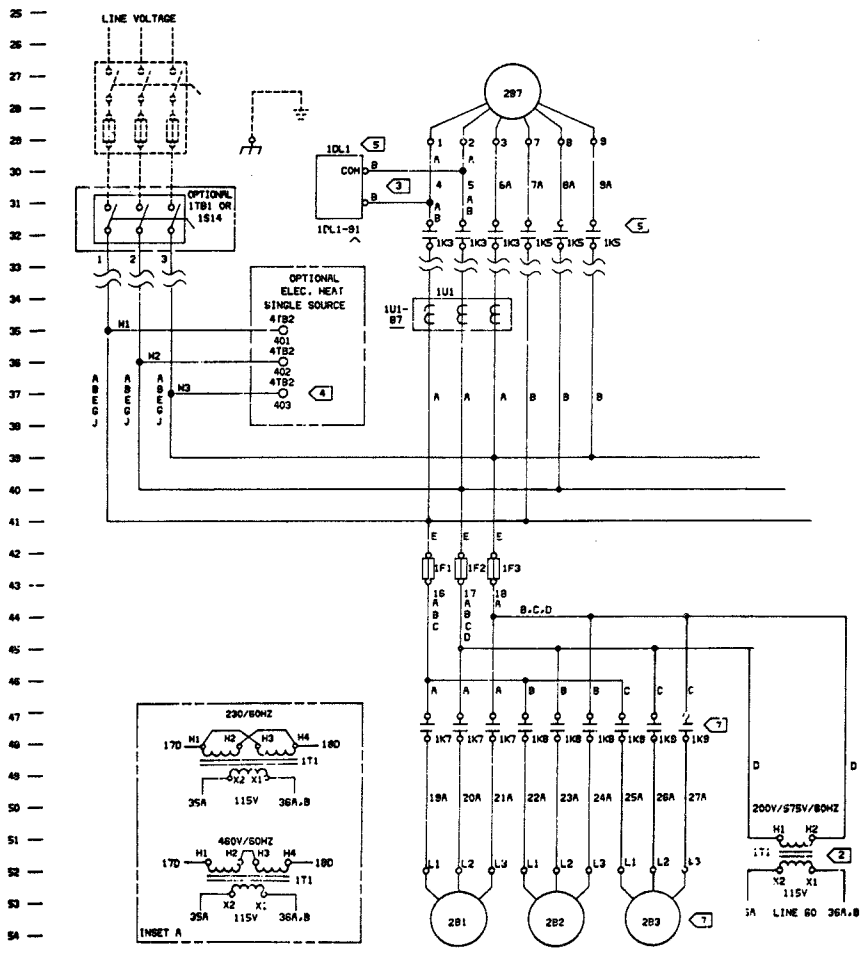

© THE TRANE COMPANY 1984

ANSI/TRANE WIRING SYSTEM

This manual serves as a guide to understanding the design and usage of Trane electrical schematic wiring diagrams that are based on the ANSI System.

The manual is intended for anyone involved with installing and/or servicing Trane commercial HVAC products.

Specific coverage includes basic diagram layout in terms of line description, road mapping, prefix location coding, wire identification, legend description and device identification logic.

A comprehensive reference list of device abbreviations and symbols is included.

What Does ANSI Stand For?

"ANSI" stands for the American National Standards Institute which is a nationally recognized standards organization which dwells in setting up standards for weights and measures, automobiles, manufacturing and electrical standards. The "ANSI" style is generic in terms of drafting, symbol and nomenclature design. In essence, this common style is applicable to any HVAC equipment and is being utilized by several manufacturers at the present time. This is a tremendous benefit for all personnel involved with installing, servicing, and maintaining today's HVAC equipment.

The question arises as to what the purpose of a wiring diagram is. The first thing that comes to mind is that it shows where the wires go. It also shows the proper sequence of operation and provides a basis for understanding troubleshooting procedures. There has been and still are many styles of wiring diagrams. No matter what style one is looking at, that particular diagram has its own set of graphic symbols, line structure and frustrations.

It is very difficult for the HVAC technician to keep track of every manufacturer's style and that's where the frustations arise. How about a "Common Style"?

Diagram Layout

"ANSI" diagrams are constructed with their own drafting, symbol and nomenclature design. In trying to understand a format such as ANSI, a look at the basic drafting construction can serve as a good starting point.

Line Description

Each wiring diagram in the "ANSI Electrical Wiring System" will contain a series of line numbers. These numbers serve as a reference for locating wires and load components. Line circuit numbers will appear in the wiring diagram's left hand columns as shown in Figure 1. These numbers are consecutive regardless of the number of sheets:

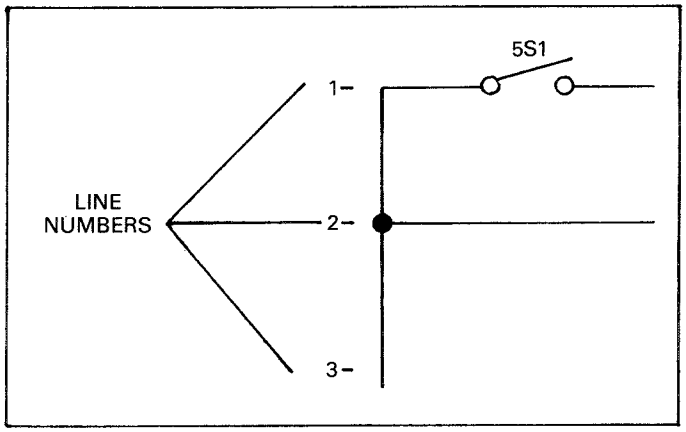

Figure 1

The electrical flow path is drawn between two parallel vertical lines which represent the source of control power with the power side on the left and the neutral on the right. The source of power shown in Figure (2) required for circuit operation shall be described at the top of the diagram between the two parallel vertical source lines and are described as volts/hertz/phase. See Figure 2.

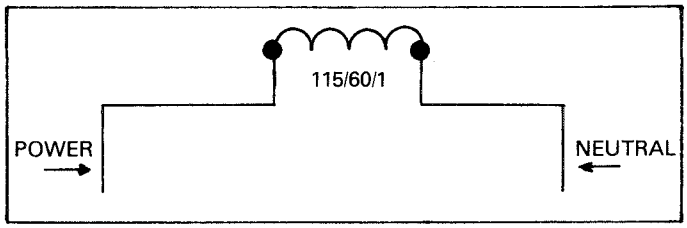

Figure 2

Road Mapping

Shown in Figure 3, one will notice the temperature control symbol and an associated relay device on one line and the relay contacts and solenoid coil on the next. If the load device is a relay, its contacts will be found on a separate horizontal circuit line.

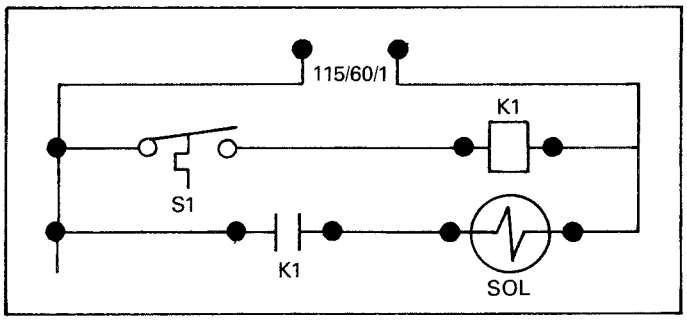

Figure 3

The next step in understanding the construction of the ANSI electrical diagram is to look at Figure 4 and notice the alphanumeric notation to the right hand side of the neutral wires. The symbol K1-3 translates to relay one and has its contact located on line 3. If there is more than one contact, the associated line numbers would follow the number 3 IE: K1-3, 6, 10. If a line number is underlined, the contact on that line number is in a normally closed position. If it is not underlined, then the contact is normally open.

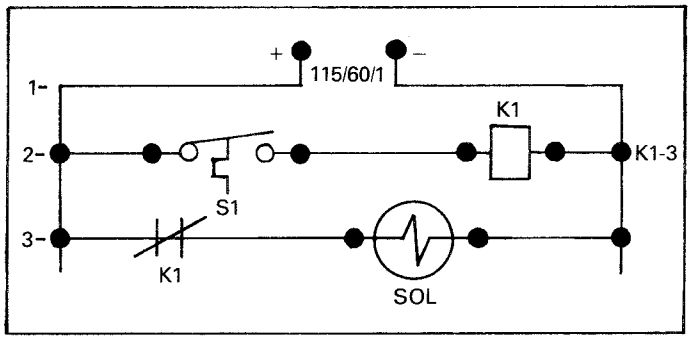

Figure 4

The next item of discussion is the description of a set of contacts. Referring to Figure 5. The K is the coded symbol for a relay. The 1 means that it is the #1 relay out of many used within the unit. The (AUX) states that this is an auxilliary contact physically mounted to the side of the contactor. The numbers 1 and 3 are physical terminal identifications. The

method of tracing relays to their associated contacts is called road mapping.

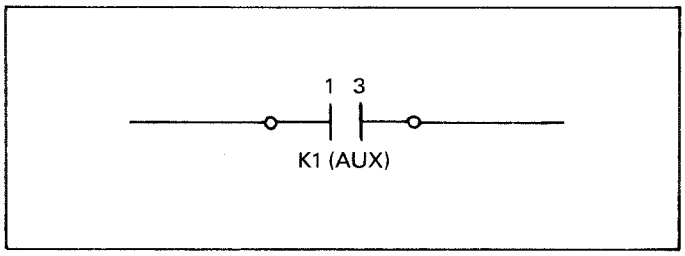

Figure 5

Prefix Location Code
Items shown on a schematic diagram may be located in various areas of a unit. For convenience purposes, these areas may be identified by numbers. For example: 1K1, 1 is the location number. A table listing the locations and prefixes is shown on the first sheet of the schematic diagram. (Shown in Figure 6). The use of the prefix location code is helpful on units with more than one electrical control panel.

Prefix Location Code	
Area	Location
1 or None	Control Panel RAUA Unit
5	Control Panel Air Handler
6	Outside Control Panel Air Handler
7	Control Panel Elect. Heat Sect.

Figure 6

Node Identification
The nodal numbering system is one of the more significant changes encountered in this new diagram style. Simply stated, for each area of the circuit of like potential (node), a number is assigned. Every individual wire found within that node is given a designation consisting of the node number and a suffix letter. (Shown in Figure 7). For example, the neutral side of the 115 volt circuit on the diagram below has the node number 19. Four individual wires are found to make up the node. Wire 19A runs from the transformer to 1K9, 19B runs from the transformer to chassis ground, 19C from 1K9 to 1K10, and 19D from 1K10 to 1K11.

Wire Identification
Each wire attached to a node is assigned to node number as it's wire number plus a suffix letter to insure its individuality as an aid to service. These suffix letters begin with "A" and follow in alphabetical order. For example, if a node has only one wire, the nodal wire number includes the suffix letter A, IE: 16A (shown in Figure 8A). If a node has 2 or more wires, the wires shall be identified with additional suffix letters, IE: 17A, B, C, and D shown in Figure 8B.

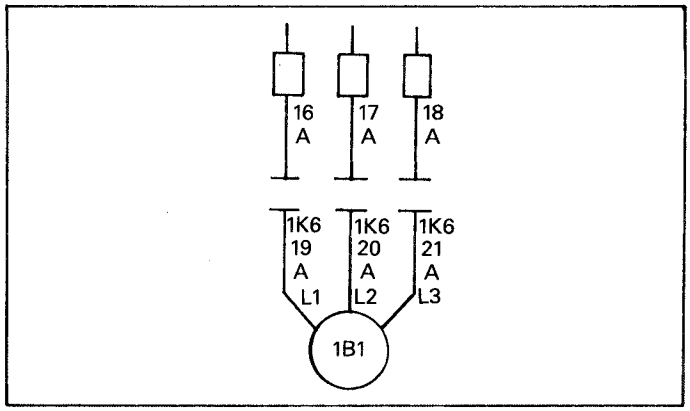

Figure 8A

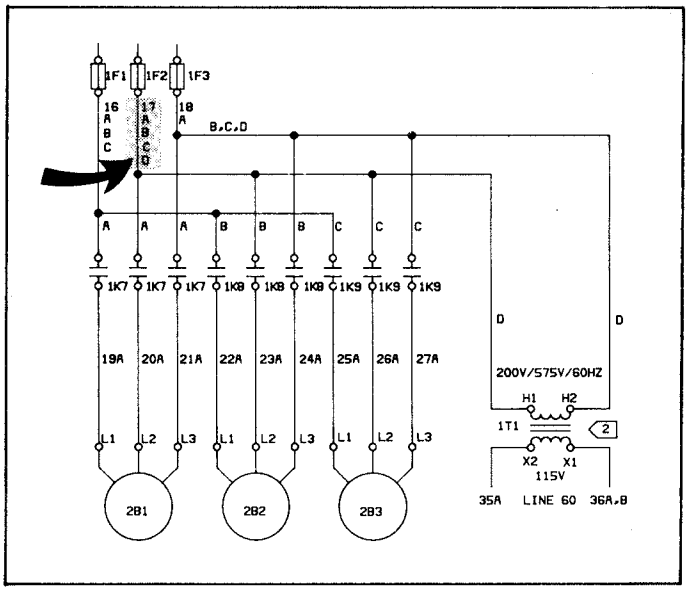

Figure 8B

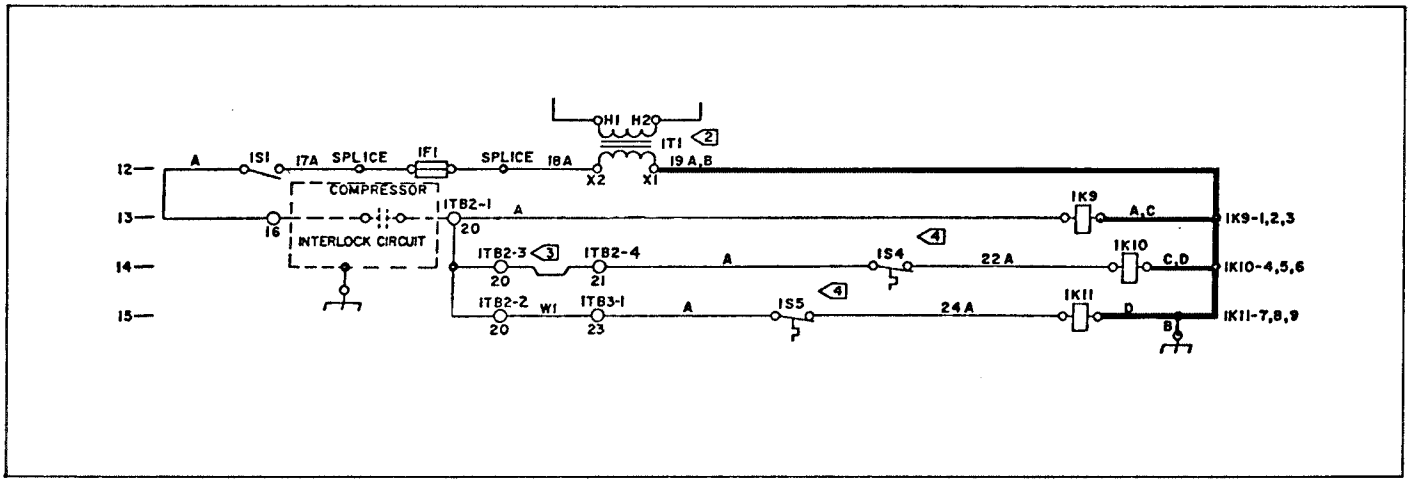

Figure 7

What is actually occuring in Figure 8B is that wire 17, A, B, C, and D is composed of 4 separate wires. These wires shown in a pictorial diagram should be connected as 4 separate wires at the 1F2 fuse terminal connection. For ANSI schematic drawing design reasons, the wires are segregated for electrical flow purposes (schematic method) only. These wires as they actually appear in the unit may be bundled together or wire tied. Each wire would be labeled individually, IE: 17A, 17B, 17C, and 17D. The open dot symbol "○" stands for an actual terminal connection. The closed dot symbol "•" stands for a wire chase where two wires are bundled together but not electrically connected at that point.

Legend Description
A legend box is always shown on the first sheet of the schematic diagram. The legend entries consist of the device designation, a description which briefly states its function. The legend is placed to the right of the schematic diagram shown in Figure 9.

Legend	
Device Designation	Description
5K1	Supply Fan Starter
5K2	Ret or Ex Fan Starter
5K3	Supply Fan Relay
5K4	Night Set Back Relay
5K5	Heat Relay Step 1
5K6	Heat Relay Step 2
5K7	Heat Relay Step 3
5K8	Heat Relay Step 4
5K9	Freezestat Relay
5K10	Cooling Relay
5S1	Control Circuit Switch
6S2	Enthalpy Control
6S3	Filter Light Switch

Figure 9

The legend will contain every electrically active device within the specified unit.

Device Identification
All switches are shown in their "at rest" position with all power turned off, and after a normal shutdown has occurred. Looking at the following symbols shown in Figure 10, note the description of each device. The actual temperature, pressure or timing changeover point can be found in the electrical sequence of operation portion of the wiring booklet.

Terminal Blocks
Terminal identification for terminal blocks are shown in Figure 11. The 5 stands for the location of the terminal board in the unit. The TB is the coded symbol for terminal board. Three is the 3rd terminal board found in the unit and the 12 is the terminal number of that board.

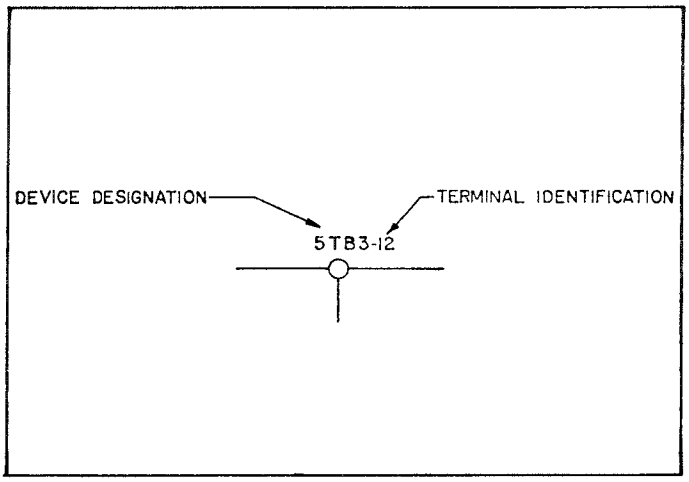

Figure 11

The use of metal terminal block jumpers may be shown two ways on schematic diagrams. When the jumper is used to connect two terminal strip node points to allow for optional hook-ups, no wire number is assigned but a jumper symbol is used. This symbol is found between nodes 20 and 21 on Figure 12 (note the identification flag).

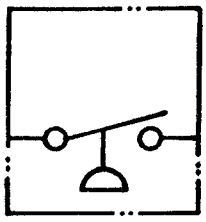

Pressure Switch
Normally open, closed on pressure drop.

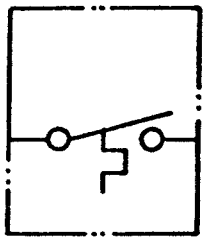

Temperature Control Switch
Normally open, closes on temperature drop.

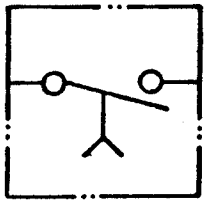

Time Delay Contact
Normally open, time to close.

Figure 10

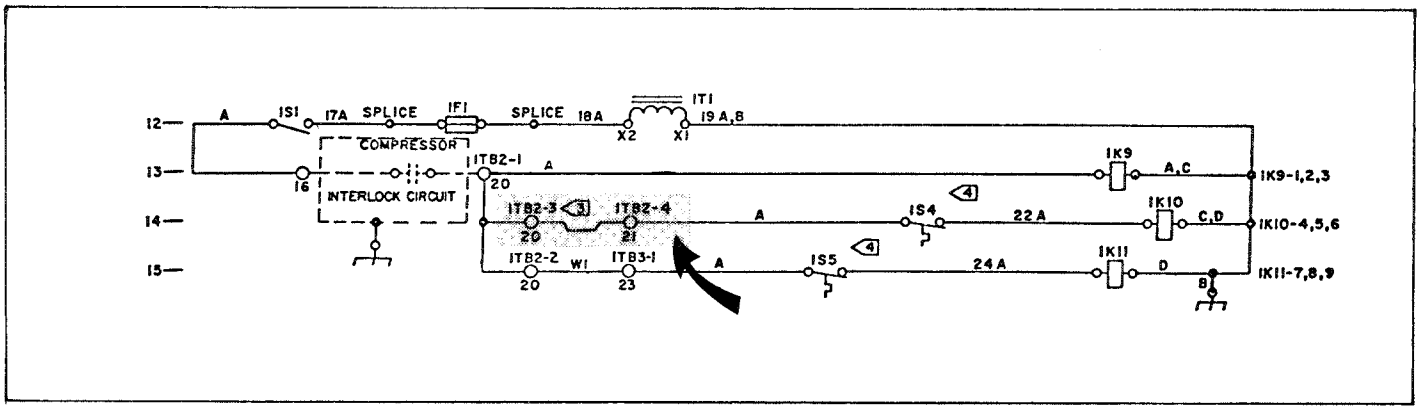

Figure 12

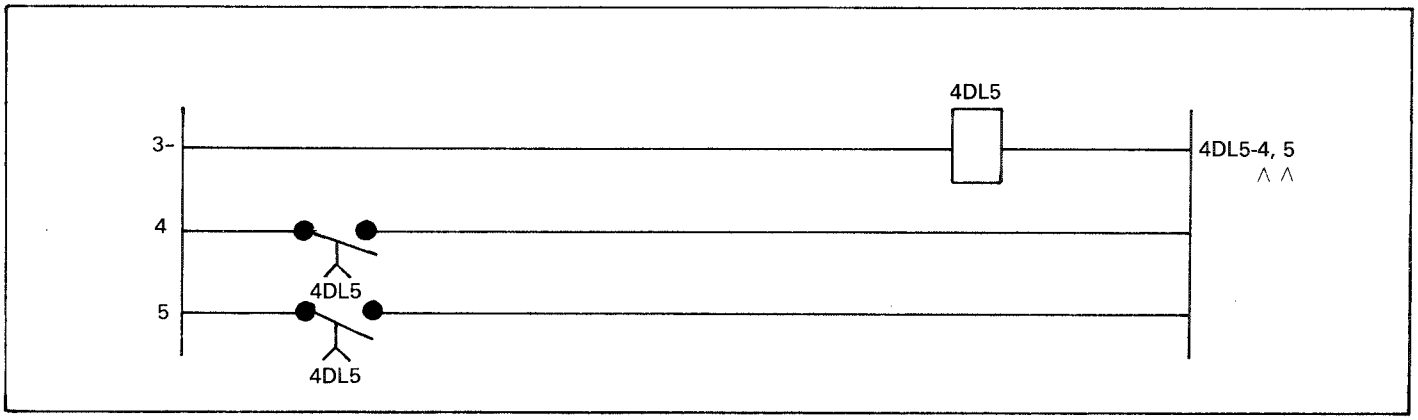

Figure 13

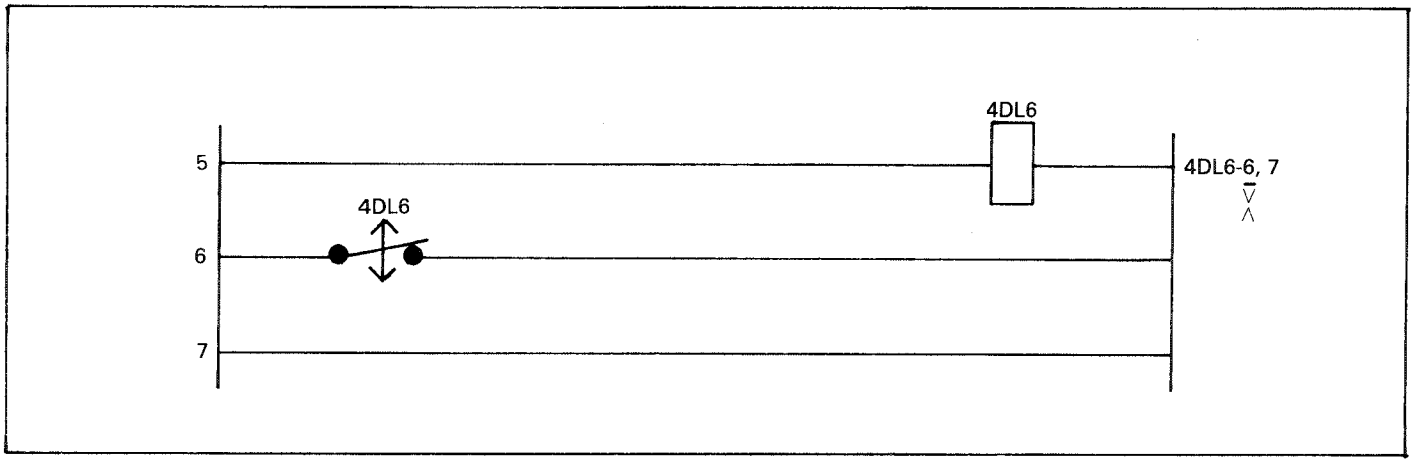

Figure 14

Time Delay Relay

Time delay relay logic appears in several forms in the wiring diagrams. A look at some of the particular highlights should help in understanding them. For example, looking at Figure 13, the time delay relay 4DL5 has two sets of contacts which are found on lines 4 and 5. The line numbers have an arrow underneath each of them pointing up. This serves as an indicator of the timing logic. Since there is no line underneath the number, the individual contact is a normally open type. The arrow pointing up indicates a time to close contact. In essence, the relay contacts 4 and 5 are both normally open-time to close. A look at the actual contacts on lines 4 and 5 also show that the contacts are found to be in the normally open position when deenergized, and time to close. This is noted by the arrow pointing up.

In Figure 14, a similar time delay relay scheme is shown. Relay 4DL6 contact number 6 is underlined. This indicates that this is normally closed contact when deenergized. Note however, that there are two arrows opposing each other below the number 6. That means the contact is a time to open-time to close type. On line 6 the contact itself has two arrows which confirms this logic.

The actual timing interval period is normally called out in the written sequence of operation section of the applicable wiring booklet. Other similar timed devices are called out in the last section of this manual under the heading "Device Graphics".

Miscellaneous Descriptive Items

Descriptive or informative messages required in the "body"

of the schematic are in the form of a note at the bottom of the sheet in which it appears and referenced at the point it applies with the note flag. See Figure 15. Notes are numbered consecutively.

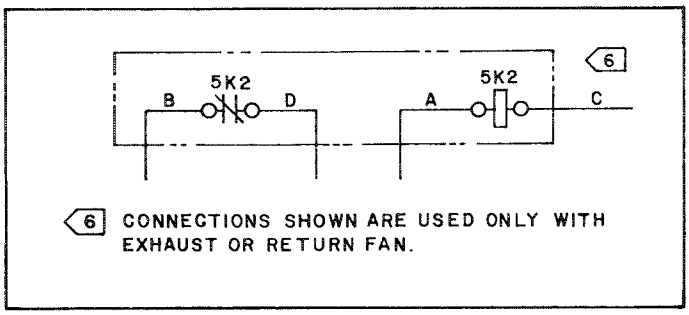

Figure 15

Device ratings, temperature and pressure switch points, time delays, etc. may be included on the schematic diagram in the form of an identified note.

What has been discussed in this manual, covers the inner workings of the ANSI format. Like anything new, it is sometimes difficult to understand a new wiring diagram code system. The benefit of using this style of wiring diagram is that it is a common style used in Trane equipment and has been or will be utilized by many other manufacturers in the HVAC industry. After working with this manual as well as a few unit wiring diagrams, the level of comfort and proficiency of the user should increase.

The following is a more complete listing of device graphics and reference designation abbreviations than the one's discussed so far in this manual.

DEVICE ABBREVIATIONS

A Separable or repairable assembly (Also see "U")

AR amplifier (other than rotating)

B blower
motor
synchro

BT battery
battery cell
photovoltaic transducer
solar cell

C capacitor

CB circuit breaker
network protector

CR asymmetrical varistor
crystal diode
current regulator (semiconductor device)
diode (semiconductor type)
diode rectifier (semiconductor type)
photodiode (photosensitive type)
thristor (semiconductor diode type)
varactor

DL delay function
delay line

DS alphanumeric display device
annunciator
general light source
indicator (excluding meter or thermometer)
lamp (excluding heating lamp)
light-emitting solid-state device
photodiode (photemissive type)
signal light
visual alarm
visual indicator
visual signaling device

E antenna
conductivity cell
electrical contact
electrical contact brush
electrical shield
gap (horn, protective, or sphere)
Hall element
ignitor gap
lightning arrester
magnetic core
miscellaneous electrical part
permanent magnet
spark gap

F fuse

G generator
oscillator

HR heater
heating lamp
heating resistor
infrared lamp
thermomechanical transducer

J disconnecting device (receptacle connector)
electrical receptacle connector
jack
receptacle (connector, stationary portion)
plug (connector, movable portion) — used with "P"

K contactor (magnetically operated)
relay

L coil (all not classified as transformers)
electrical solenoid
inductor
lamp ballast
motor field
reactor
winding

LS	audible alarm audible signalling device buzzer electric bell electric horn
M	clock coulomb accumulator elapsed time recorder electric timer electrical counter electrochemical step-function device meter meter-type level pressure gage
MT	accelerometer measuring transducer mode transducer motional pickup transducer
P	disconnecting device (plug connector) electrical plug connector plug (connector, movable portion)
PS	power supply rectifier (complete power-supply assembly)
Q	semiconductor controlled rectifier semiconductor controlled switch phototransistor (3 terminal) thyratron (semiconductor device) thyratron (semiconductor triode type) transistor
R	potentiometer resistor rheostat
RT	temperature-sensing element thermal resistor thermistor
S	contactor (manually, mechanically, or thermally operated) disconnecting device (switch) electrical safety interlock switch thermal cutout (circuit interrupter) (not visual) thermostat
SQ	fusible link
SR	electrical contact ring rotating contact slip ring
T	autotransformer transformer current transformer
TB	connecting strip terminal board terminal strip
TC	semiconductor thermocouple thermocouple thermopile
U (see also A)	inseparable assembly integrated-circuit package microcircuit micromodule non-repairable assembly photon-coupled isolator
VR	breakdown diode (voltage regulator)
W	cable cable assembly (with connectors) conductor distribution line distribution path transmission line transmission path wire

DEVICE SYMBOLS

ALARMS

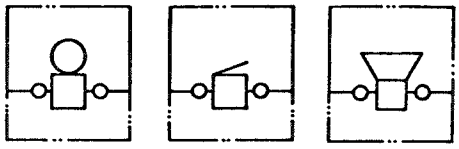

SOUND BELL BUZZER HORN

BATTERY

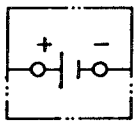

CAPACITOR

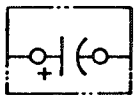

CIRCUIT BREAKER

GENERAL

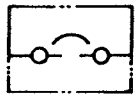

THERMAL

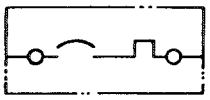

MAGNETIC

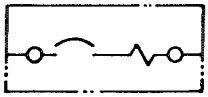

THERMAL-MAGNETIC

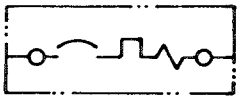

WIRES CONNECTED

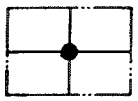

WIRE SPLICE

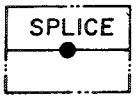

INTERRUPTED PATH



HORIZONTAL



VERTICAL

CONDUCTORS

WIRE OR CONDUCTIVE PATH



WIRE OR CONDUCTIVE PATH FIELD INSTALLED OR OPTIONAL IF SPECIFIED

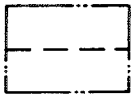

WIRE OR CABLE END, NOT CONNECTED

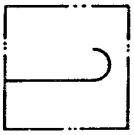

WIRE OR CABLE WITH END ESPECIALLY INSULATED

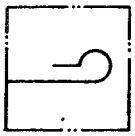

SHIELDED SINGLE CONDUCTOR

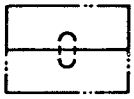

MULTIPLE CONDUCTOR CABLE (2-CONDUCTOR SHOWN)

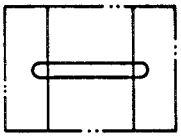

SHIELDED MULTIPLE CONDUCTOR CABLE (2-CONDUCTOR SHOWN)

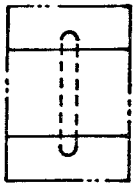

SHIELDED CABLE WITH SHIELDED GROUND (2-CONDUCTOR SHOWN)

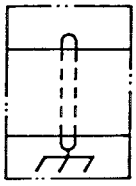

WIRES CROSSING, NOT CONNECTED

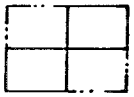

EARTH GROUND



EQUIPMENT GROUND

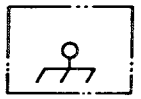

SAFETY OR PROTECTIVE GROUND SUCH AS PROTECTION AGAINST ELECTRICAL SHOCK IN CASE OF FAULT

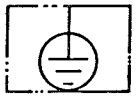

COMMON CONNECTIONS, CONDUCTING CONNECTIONS MADE TO ONE ANOTHER.

ALL LIKE-DESIGNATED POINTS ARE CONNECTED.

ASTERISK SHALL BE REPLACED WITH IDENTIFYING VALUES OR MARKS.

SPECIFIC POTENTIAL DIFFERENCE. TO BE USED WHEN THERE IS A SPECIFIC POTENTIAL DIFFERENCE WITH RESPECT TO A POTENTIAL REFERENCE LEVEL.

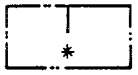

POTENTIAL LEVEL NOT SPECIFIED BY A NUMERICAL VALUE. TO BE USED WHEN IDENTICALLY ANNOTATED COMMON-RETURN CONNECTIONS ARE AT THE SAME POTENTIAL LEVEL.

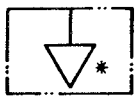

JUMPER
USED TO INDICATE CONNECTIONS BETWEEN ADJACENT TERMINALS ON A TERMINAL BLOCK



CONNECTOR

MALE

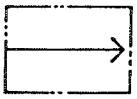

FEMALE



CONNECTED

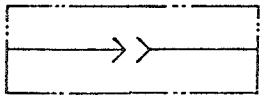

CONTACTS

OPEN

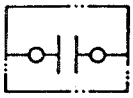

CLOSED

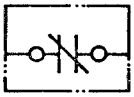

TRANSFER

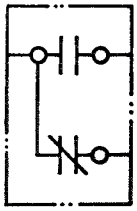

COILS

BASIC
RELAYS, STARTERS, ETC.

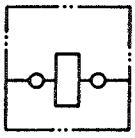

THERMAL RELAY

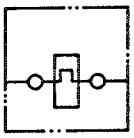

ELECTRO-MECHANICAL ACTUATOR
SOLENOID VALVES

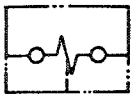

ELECTRO-MECHANICAL COUNTER

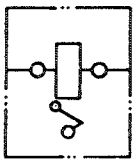

FUSE

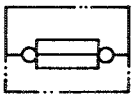

FUSIBLE LINK

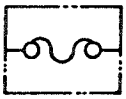

HEATER



LIGHT

PILOT, INDICATING, OR SIGNAL.
COLOR IDENTIFICATION LETTER TO BE
ADDED TO CENTER OF SYMBOL.

A — AMBER
B — BLUE
C — CLEAR
G — GREEN
O — ORANGE
OP — OPALESCENT
P — PURPLE
R — RED
W — WHITE
Y — YELLOW

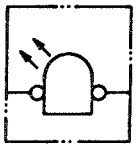

LIGHT-EMITTING DIODE (LED)

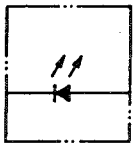

METER

IDENTIFICATION LETTER MUST BE
ADDED TO CENTER OF SYMBOL.

A — AMMETER
AH — AMPERE-HOUR METER
OHM — OHMETER
OP — OIL PRESSURE METER
V — VOLTMETER
W — WATTMETER

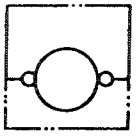

MOTORS

2-LEAD MOTOR

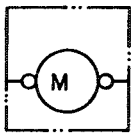

3-LEAD MOTOR

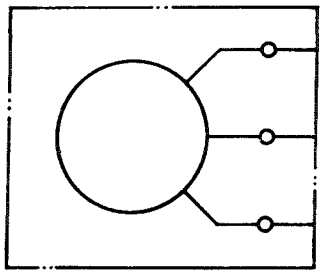

6-LEAD MOTOR

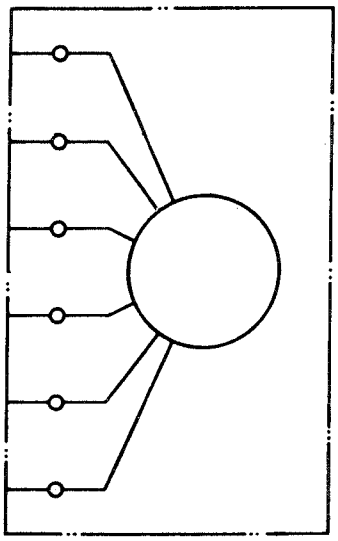

OVERLOAD

MAGNETIC

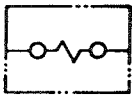

THERMAL

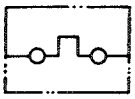

CURRENT

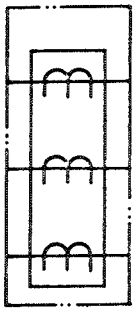

RECEPTACLE

125V 15A RATING
2-POLE 3-WIRE GROUNDING
APPLICABLE GROUND SYMBOL MUST BE ADDED

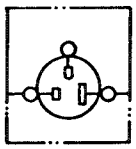

125V 20A RATING
2-POLE 3-WIRE GROUNDING
APPLICABLE GROUND SYMBOL MUST BE ADDED

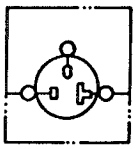

RESISTOR

FIXED VALUE



TAPPED 2-TAP SHOWN

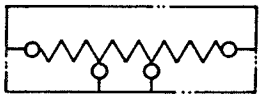

VARIABLE SLIDE TYPE POTENTIOMETOR

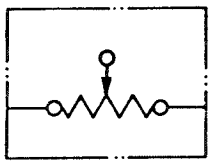

SWITCHES

NORMALLY OPEN

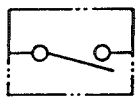

NORMALLY CLOSED

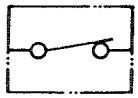

2-POSITION
SINGLE POLE-DOUBLE THROW

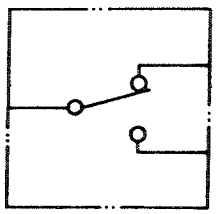

3-POSITION
SINGLE POLE-DOUBLE THROW
WITH CENTER "OFF"

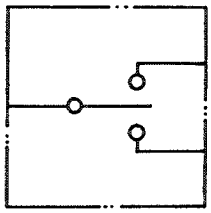

MOMENTARY
NORMALLY OPEN — MOMENTARY
CLOSE

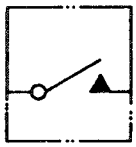

MOMENTARY
NORMALLY CLOSED — MOMENTARY
OPEN

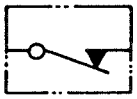

2-POSITION MOMENTARY
SINGLE POLE— DOUBLE THROW
1-POSITION MOMENTARY

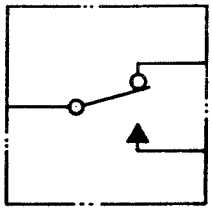

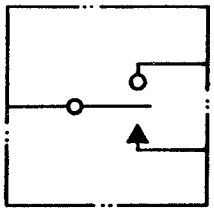

3-POSITION MOMENTARY
SINGLE POLE-DOUBLE THROW WITH
CENTER "OFF"
1-POSITION MOMENTARY

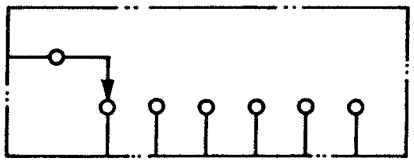

SELECTOR
MULTI-POSITION SHORTING
LINEAR OR ROTARY

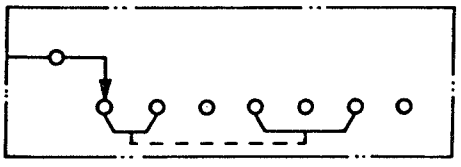

SELECTOR
MULTI-POSITION
LINEAR OR ROTARY

MOTOR OPERATED
NORMALLY OPEN-MOTOR CLOSE

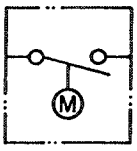

MOTOR OPERATED
NORMALLY CLOSED-MOTOR OPEN

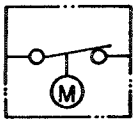

CENTRIFUGAL
OPENS ON INCREASING SPEED

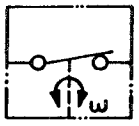

TIME-DELAY
NORMALLY OPEN-TIMED CLOSE

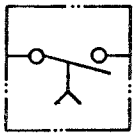

TIME-DELAY
NORMALLY OPEN
INSTANT CLOSE-TIME OPEN

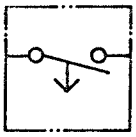

TIME-DELAY
NORMALLY CLOSED-TIMED OPEN

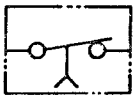

TIME DELAY
NORMALLY CLOSED
INSTANT OPEN-TIMED CLOSE

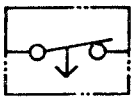

FLOW SWITCH
NORMALLY OPEN
CLOSE ON FLOW INCREASE

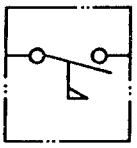

FLOW SWITCH
NORMALLY CLOSED
OPEN ON FLOW INCREASE

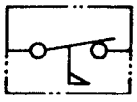

PRESSURE SWITCH
NORMALLY OPEN
CLOSE ON PRESSURE INCREASE

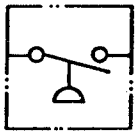

PRESSURE SWITCH
NORMALLY CLOSED
OPEN ON PRESSURE INCREASE

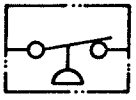

PRESSURE SWITCH
NORMALLY OPEN
CLOSE ON PRESSURE DECREASE

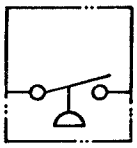

PRESSURE SWITCH
NORMALLY CLOSED
OPEN ON PRESSURE DECREASE

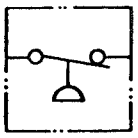

DIFFERENTIAL PRESSURE SWITCH
NORMALLY OPEN
CLOSE ON RISING DIFFERENTIAL
PRESSURE

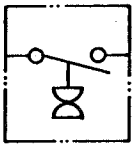

DIFFERENTIAL PRESSURE SWITCH
NORMALLY CLOSED
OPEN ON RISING DIFFERENTIAL
PRESSURE

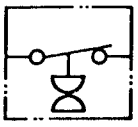

PRESSURE SWITCH
SINGLE POLE-DOUBLE THROW

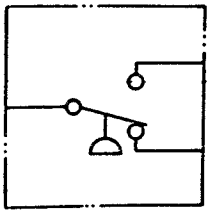

PRESSURE SWITCH
NORMALLY OPEN
CLOSE ON PRESSURE INCREASE
MANUAL RESET

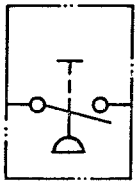

PRESSURE SWITCH
NORMALLY CLOSED
OPEN ON PRESSURE INCREASE
MANUAL RESET

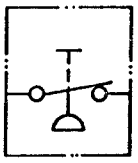

TEMPERATURE SWITCH
NORMALLY OPEN
CLOSE ON TEMPERATURE RISE

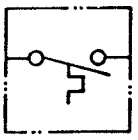

TEMPERATURE SWITCH
NORMALLY CLOSED
OPEN ON TEMPERATURE RISE

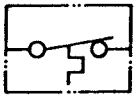

TEMPERATURE SWITCH
NORMALLY OPEN
CLOSE ON TEMPERATURE DROP

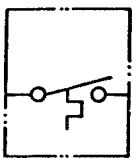

TEMPERATURE SWITCH
NORMALLY CLOSED
OPEN ON TEMPERATURE DROP

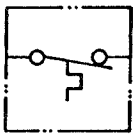

TEMPERATURE SWITCH
SINGLE POLE-DOUBLE THROW

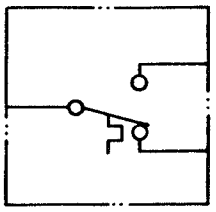

TEMPERATURE SWITCH
NORMALLY OPEN
CLOSE ON TEMPERATURE RISE
MANUAL RESET

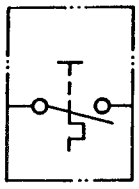

TEMPERATURE SWITCH
NORMALLY CLOSED
OPEN ON TEMPERATURE DROP
MANUAL RESET

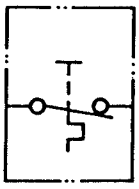

TEMPERATURE SWITCH
NORMALLY CLOSED
OPEN ON TEMPERATURE RISE
MANUAL RESET

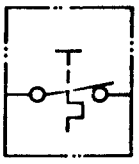

FLOAT SWITCH
NORMALLY OPEN
CLOSE ON RISING LEVEL

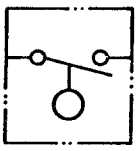

FLOAT SWITCH
NORMALLY CLOSED
OPEN ON RISING LEVEL

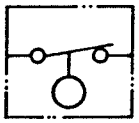

LIMIT SWITCH
NORMALLY OPEN

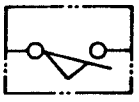

LIMIT SWITCH
NORMALLY CLOSED

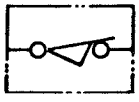

LIMIT SWITCH
NORMALLY OPEN-HELD CLOSED

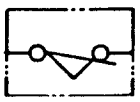

LIMIT SWITCH
NORMALLY CLOSED-HELD OPEN

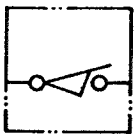

HUMIDITY CONTROL
NORMALLY OPEN
CLOSE ON INCREASE

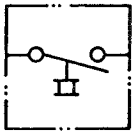

HUMIDITY CONTROL
NORMALLY CLOSED
OPEN ON INCREASE

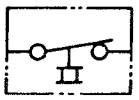

ENTHALPY CONTROL
NORMALLY OPEN
CLOSE ON INCREASE

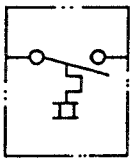

ENTHALPY CONTROL
NORMALLY CLOSED
OPEN ON INCREASE

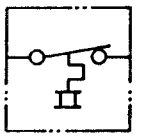

PUSH BUTTON
CIRCUIT CLOSING (MAKE)

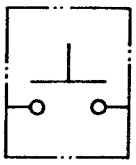

PUSH BUTTON
CIRCUIT OPENING (BREAK)

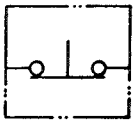

PUSH BUTTON
2-CIRCUIT

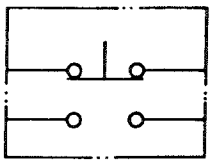

PUSH BUTTON
2-CIRCUIT
1-MAINTAINED AND 1-MOMENTARY

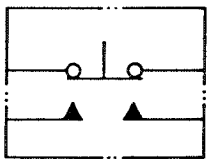

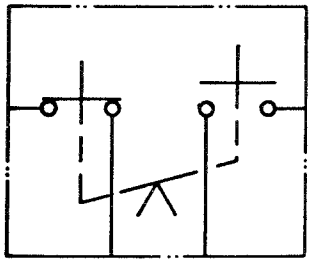

PUSH BUTTON
2-CIRCUIT MAINTAINED OR NOT
SPRING-RETURN

MERCURY
2-TERMINAL
SINGLE POLE-SINGLE THROW

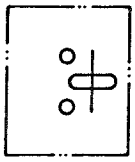

MERCURY
3-TERMINAL
SINGLE POLE-DOUBLE THROW

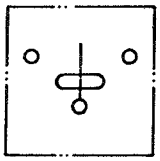

MERCURY
4-TERMINAL
DOUBLE POLE-DOUBLE THROW

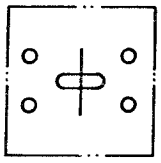

TIME DELAY
SOLID STATE
TIMED CLOSED
SERIES DEVICE

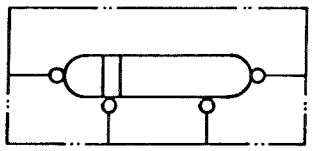

SPARK GAP

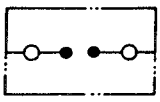

THERMOCOUPLE

TEMPERATURE MEASURING
DEVICE OF DISSIMILAR METALS

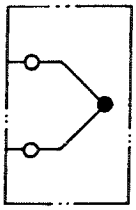

TRANSFORMER

CURRENT

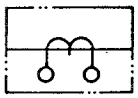

AUTOTRANSFORMER
1-PHASE



GENERAL
1-PHASE

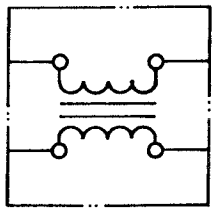

MULTI-TAP
1-PHASE

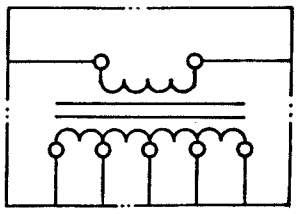

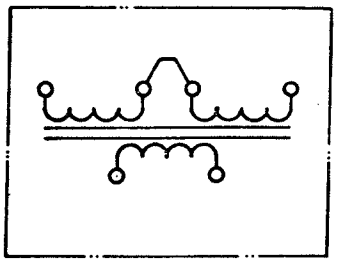

3-WINDING
1-PHASE
PRIMARY SERIES-CONNECTED

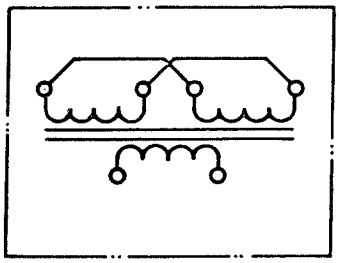

3-WINDING
1-PHASE
PRIMARY PARALLEL CONNECTED

TERMINALS

TERMINAL

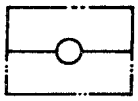

TERMINAL

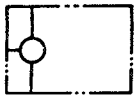

TERMINAL

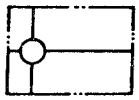

RECTIFIER

BRIDGE TYPE — SOLID STATE

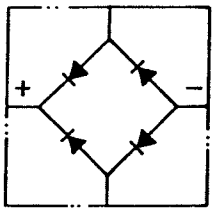

STARTER

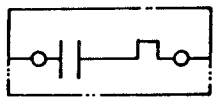

TRANE

Applications Engineering Manual

CenTraVac® Starters



(CON-AM-23-1886)

CenTraVac® Starters

Purpose

The purpose of this applications manual is to explain the history, function and use of starters on Trane CenTraVac® water chillers.

Contents

General Starter Requirements 2

History 2

Starter Specifications 2

Starter Types 3

Comparison Of Starter Types 3

Disconnect Means And Short Circuit Protection 8

Power Wiring 10

Power Wiring To Starter 11

Wiring From Starter To Compressor Motor 11

Starter Options 12

Options List 12

Wiring Diagrams 12-16

Submittals 17

Definitions 19

©American Standard, Inc., 1988

The Trane Company, La Crosse, Wisconsin 54601

CenTraVac® Starters - General Requirements

Every CenTraVac® requires a starter. It may be remotely-mounted or unit-mounted. Unit-mounted starters are avilable in the low voltage, star-delta type with a maximum rating of 606 RLA.

CenTraVac starters must:

• be compatible with the characteristics of a hermetic, centrifugal compressor motor and with the electrical circuitry of a CenTraVac.

• have a control power transformer for providing 120 VAC control power for the starter control circuitry and for the CenTraVac control circuitry.

• be pilot relay operated. It must start the compressor only on a "start" request from the CenTraVac control circuitry. A push-to-start pushbutton starter is not permitted. The starter must stop the compressor on a "stop" request from the CenTraVac control circuitry or in response to the starter safeties.

• provide motor current level signals for overload protection and for current limiting fuctions.

• contain appropriate interlocks for starter condition monitoring, purge operation and oil pump operation.

• have correctly labeled terminals to agree with Trane Company installation wiring diagrams.

All of these general requirements are addressed specifically in the The Trane Company CenTraVac Starter Specifications.

History

Prior to 1968, the starter manufacturers relied on Trane unit schematic wiring diagrams to design appropriate starters.

The first formal starter specification was written in 1968. In this specification, certain parts of the starter were clearly defined.

1. Control power transformer size
2. Overload relay type
3. Pilot relay operation defined
4. Oil pump starter
5. Required interlocks
6. Current limiting signal
7. Terminal designations

The starter construction and circuitry were left to the starter manufacturer. Only those parts that interfaced with the CenTraVac were defined.

This starter specification, Table 1, has been re-written through the years with each basic CenTraVac design change.

Table 1 - Starter Specifications

Year	Trane Specifications	CenTraVac	Capacity Control	Overload
1968-1973	SES 14-11.00	CV,PCV	Pneumatic	Inverse Time Magnetic
1973-1980	SES 14-18.00	CVHA,CVHB	Pneumatic	Inverse Time Magnetic
1980-1986	SES 14-18.09	CVHE, CVHB	Electric	Solid State (Cutler Hammer)
1986- (Direct Purchase)	*Low Voltage-* E.S S13340261 *High Voltage-* E.S. S13340262	CVHE, CVHB	Electric	Electronic (Function Of Micro Control)
1986- (Purchased Thru Trane)	*Low Voltage-* S6516-0066 *High Voltage-* S6516-0067			

Starter Types

The following is a starter tabulation followed by an explanation of the sequence of operation of the various starter types.

Table 2 - Starter Types

Starter Type (All Closed Transition)	Inrush Current (%LRA)	Percent Of Rated Torque	Frequency Of Use (%)	Advantages	Disadvantages	Typical Acceleration Time*
Low Voltage 208-600 Volts						
Star - Delta Closed Transition	33	33	95	1. Equal Reduction Of Torque & Inrush Current 2. Low Cost 3. Can Be Unit Mounted	1. Not Applicable To Voltages Over 600	6-12 Seconds
X - Line	100	100	_	1. Low Cost 2. Least Complex Least Maintenance	1. Draws Highest Current During Startup	3-5 Seconds
Auto-Transformer 65% Tap**	45	42	5	1. Almost Equal Reduction of Torque And Inrush Current	1. Most Expensive	3-8 Seconds
High Voltage 2400 - 4160 Volts						
X - Line	100	100	30	1. Low Cost 2. Least Complex Least Maintenance	1. Draws Highest Current During Startup	3-5 Seconds
Primary Reactor 65% Tap**	65	42	60	1. Good Compromise Between First Cost & Inrush Current Reduction	_	3-8 Seconds
Auto-Transformer 65% Tap**	45	42	10	1. Almost Equal Reduction Of Torque & Inrush Current 2. Lowest Inrush Current	1. Most Expensive	3-8 Seconds

* The acceleration time will vary accoring to the refrigerant temperature in the evaporator, the exact chiller configuration and other factors.
**The 65% tap is the minimum tap that will develop sufficient torque to successfully accelerate the compressor under any operating conditions.

Starter Types

Across -The- Line Starter (Figure 1)

A "start" signal from the CenTraVac®control panel energizes the pilot relay (PR). The pilot relay contacts close to energize the start/run contactor (1M). The 1M contacts close to connect the compressor motor directly to the line.

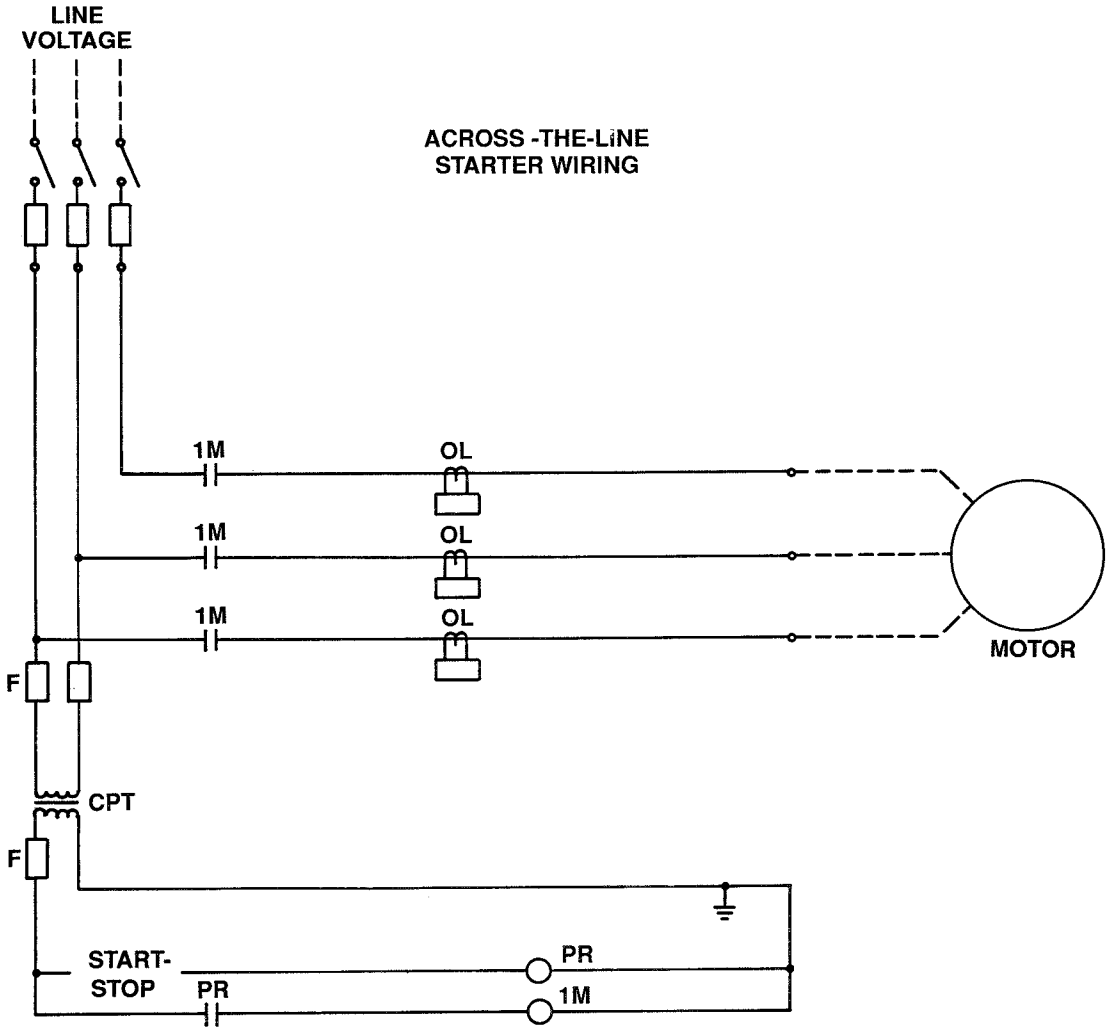

Figure 1

Auto - Transformer Starter (Figure 2)

A "start" signal from the CenTraVac control panel energizes the pilot relay (PR). The pilot relay contacts close to energize the shorting contactor (S). The S contacts close to complete the auto - transformer circuit. An S interlock closes to energize the start contactor (1M). The 1M contacts close to connect the compressor motor to the line with the motor in series with the auto - transformer. A time delay relay or current monitoring device initiates transition by energizing the transition relay (T). The T contacts open to deenergize the S contactor. The S contacts open to open the auto - transformer circuit. The auto - transformer is now connected as a series reactor with the motor. Now, a second T interlock and a second S interlock both close to energize the run contactor (2M). The 2M contacts close to bypass the auto - transformer and connect the compressor motor directly to the line.

Since the motor is not disconnected from the line during transition, this is a closed transition starter.

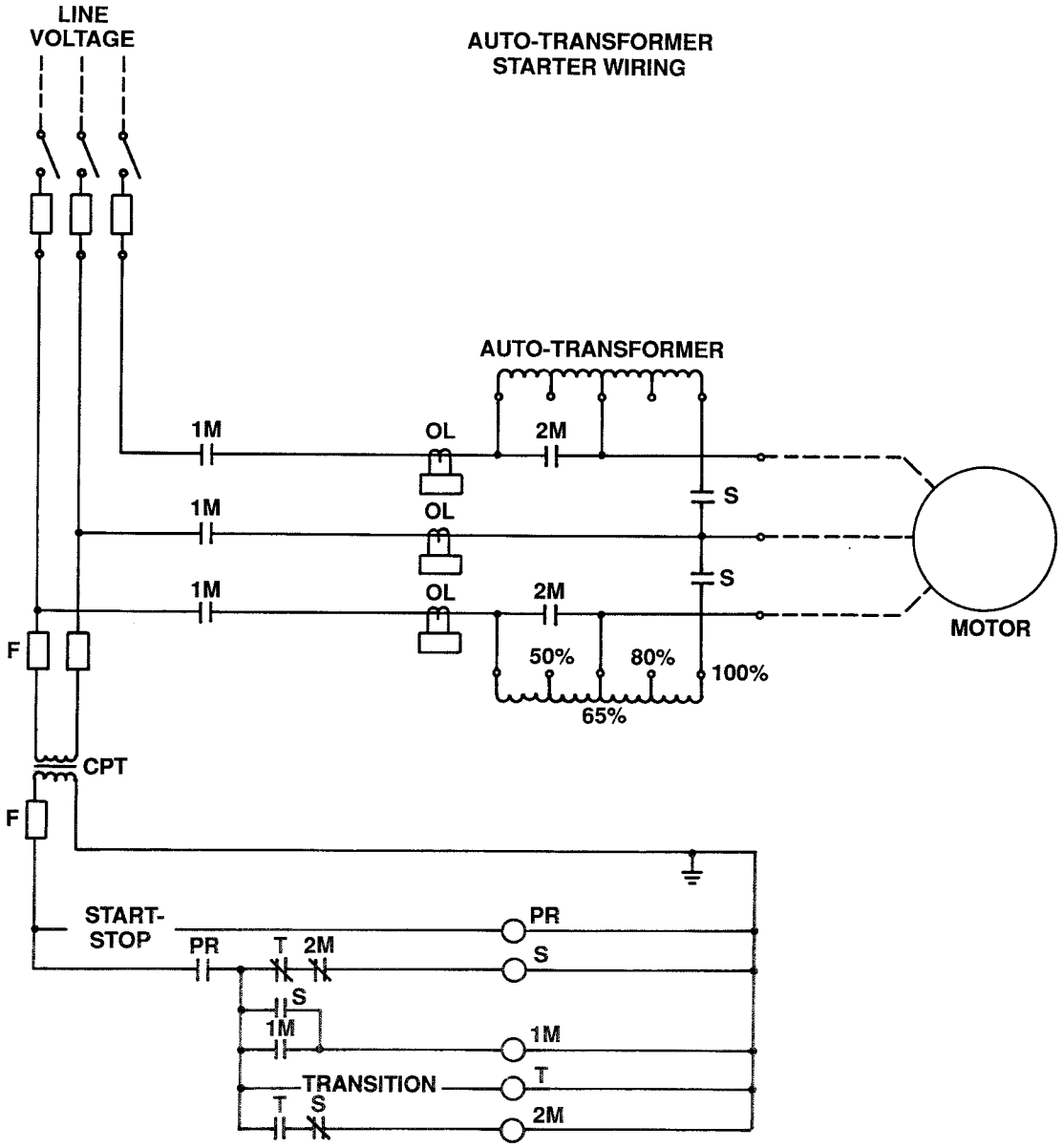

Figure 2

Starter Types

Primary Reactor Starter (Figure 3)

A "start" signal from the CenTraVac® control panel energizes the pilot relay (PR). The pilot relay contacts close to energize the start contactor (1M). The 1M contacts close to connect the compressor motor to the line with the motor in series with the reactor. A time delay relay or current monitoring device initiates transition by energizing the run contactor (2M). The 2M contacts close to bypass the reactor and connect the compressor motor directly to the line.

This is an inherently closed transition starter.

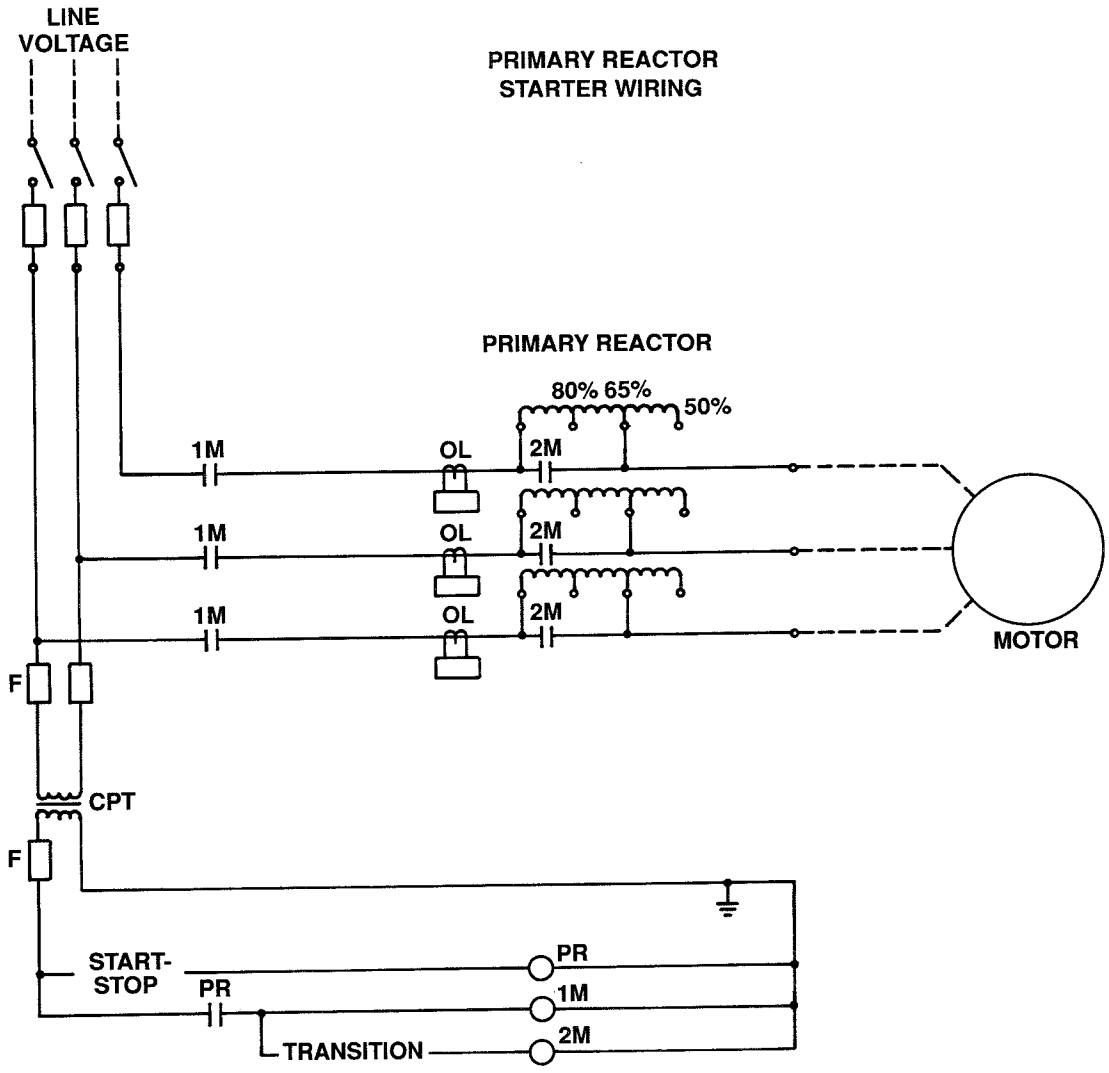

Figure 3

Star - Delta Starter (Figure 4)

A "start" signal from the CenTraVac control panel energizes the pilot relay (PR). The PR contacts close to energize the star contactor (S). The S contacts close to connect the motor in the star configuration. An S interlock closes to energize the start contactor (1M). The 1M contacts close to connect the motor to the line.

A time delay relay or current monitoring device initiates transition by energizing the resistor contactor (1A). 1A contacts close to connect the resistors to the line in the star configuration and in parallel with the compressor motor. A 1A interlock now opens to deenergize the S contactor. The S contacts open to connect the resistors and motor windings in series in the delta configuration. An S interlock closes to energize the run contactor (2M). The 2M contacts close to bypass the resistors and connect the compressor motor directly to the line in the delta configuration.

Since the motor is not disconnected from the line during transition, this is a closed transition starter.

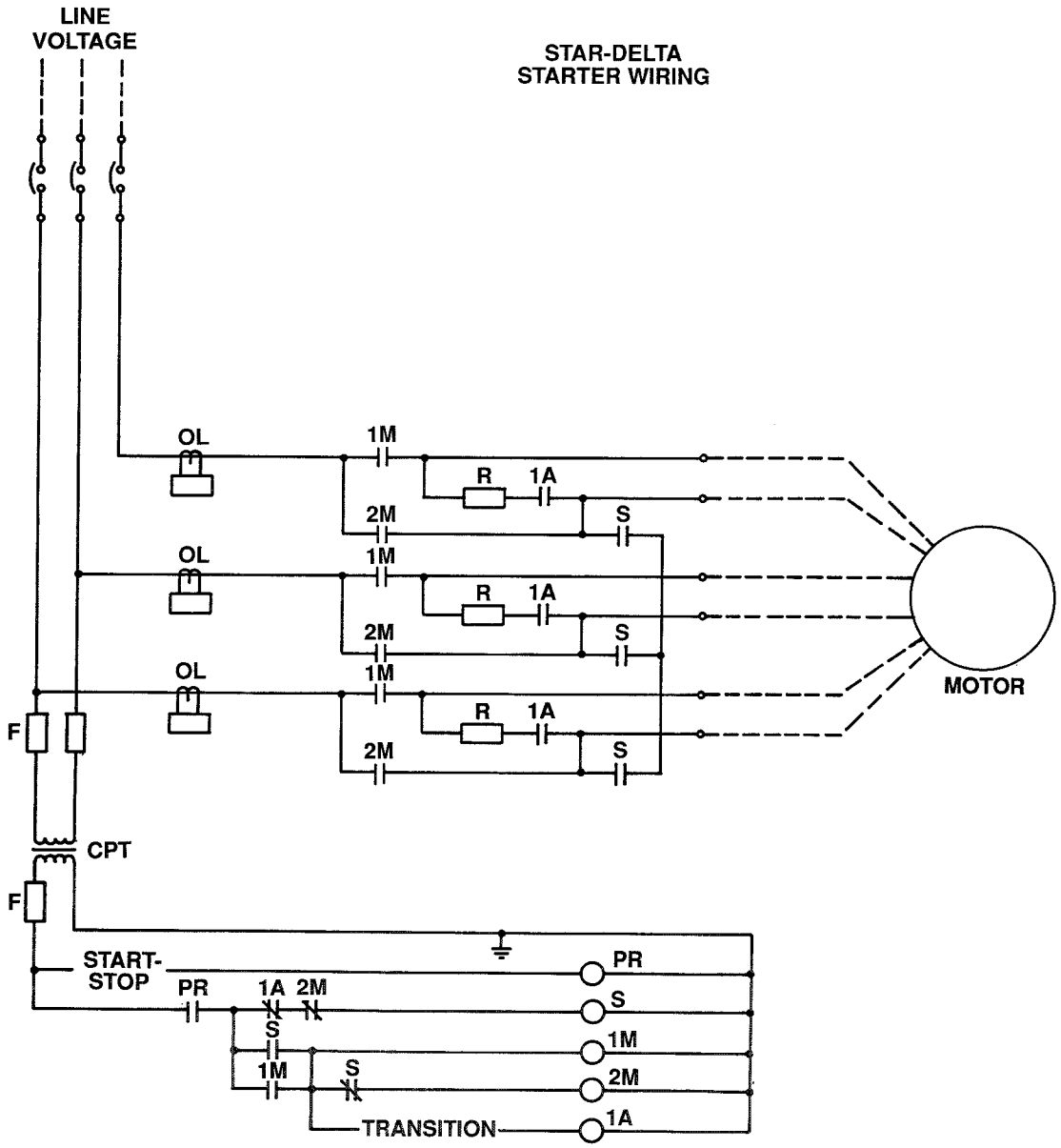

Figure 4

Disconnect Means And Short Circuit Protection

The following is a discussion of the various disconnect and short circuit protection devices.

Isolation Switch ... A manual switch that is capable of isolating the starter from the main incoming power. An isolation switch has no interrupting rating.

Load Break Disconnect Switch ... A manual switch so constructed that it has an interrupting rating and can be used to safely interrupt a live circuit.

Disconnect Means - High Voltage ... All high voltage starters have an isolation switch as standard. All high voltage starters have a mechanical interlock to prevent opening the isolation switch while the main contactor is closed and the compressor is running. In order to open the high voltage compartment door, the compressor must be turned off and then the isolation switch may be opened. When the isolation switch is opened, its stabs separate from the high voltage bus. Baffles slide over to cover the stab slots and the high voltage bus is completely isolated behind shielding panels. Now the high voltage compartment door may be opened safely. The high voltage compartment door must be closed before the isolation switch can be reclosed.

A load break disconnect switch may be furnished as an option on high voltage starters. The load break switch is mounted in an additional section of the starter cabinet assembly. The switch is spring loaded as the handle is moved. When spring pressure is sufficient, a device releases the switch mechanism. The spring loading provides rapid, positive opening and closing of the contacts.

Circuit breakers are not available for voltages over 600 VAC.

Disconnect Means - Low Voltage ... Typically, low voltage starters have no means of interlocking to prevent the opening of an isolation switch under load. A plain isolation switch has no interrupting rating and may not successfully quench the arc that may develop if the isolation switch were opened under load (i.e., while the compressor is running). An arc could result in sudden expansion of the air in the starter and could blow the door open, endangering personnel.

A circuit breaker, on the other hand, does have an interrupting rating. In fact, a circuit breaker is constructed to safely interrupt even fault current (i.e., short circuit) and may be opened safely at any time. Therefore, when a fused disconnect or non-fused disconnect is specified on a low voltage CenTraVac® starter, a "gutless" circuit breaker (a circuit break without a current trip device) will be furnished. When a circuit breaker is specified, it serves both as the short circuit protector and the disconnect switch. A low voltage starter door may be opened only if the circuit breaker is in the "off" or open position.

Short Circuit Protection ... Short circuit protection provides a means of safely disconnecting the CenTraVac and the starter from the main electrical supply in the event of a short circuit.

High Voltage
All high voltage starters contain current limiting fuses for short circuit protection. The current limiting fuses and isolation switch furnished as standard fulfill the request for a fused disconnect.

Low Voltage
A circuit breaker, or a "gutless" circuit breaker with fuses, provides short circuit protection.

When a low voltage starter is ordered with a circuit breaker, the starter manufacturer furnishes a standard circuit breaker sized at approximately 125 percent of compressor RLA. The trip current of a circuit breaker is adjustable so that it will not trip during startup and acceleration, but will trip instantaneously (typically 1 cycle) if a short circuit occurs.

The interrupting capacity of a circuit breaker must also be considered. The interrupting capacity is the maximum fault current the circuit breaker can interrupt without being destroyed. An analysis of an installation may be done by others to calculate the maximum current that could be delivered to a short circuit.

A standard circuit breaker can interrupt 30KA (30,000 amps) @ 480V. If the calculated fault current exceeds the interrupting capacity of a standard circuit breaker, the starter will require a high interrupting capacity circuit breaker (35KA @ 480V) or a current limiting circuit breaker

(200KA @ 480V). The actual circuit breaker interrupting capacities may vary by manufacturer.

A high interrupting capacity circuit breaker has contacts and arc extinguishers specifically designed to interrupt high current.

A current limiting circuit breaker uses a standard circuit breaker that incorporates three current limiting devices that are coordinated with the interrupting capacity of the breaker. A fault current below the interrupting capacity of the circuit breaker will be interrupted by the breaker. However, a fault current in excess of the interrupting capacity of the circuit breaker will cause the fuse links of the current limiters to blow quickly to interrupt the fault current. A plunger in the current limiters will release to trip the circuit breaker. The circuit breaker then cannot be reset until the blown current limiters are replaced.

When a low voltage starter is ordered with a fused disconnect, a "gutless" circuit breaker with fuse clips is furnished. A "gutless" circuit breaker can only be opened or closed manually and serves as a safe disconnect switch.

The NEC allows a maximum fuse size of 175 percent RLA. However if that is not large enough to start a motor, the NEC allows the maximum fuse size to be increased to 225 percent RLA. The fuse clips furnished will accept fuses sized at 150 percent to 195 percent of compressor RLA. Fuses above 600A are bolted directly into the bus work instead of being mounted in fuse clips.

The following is a list of compressor RLA and fuse clip or fuse provisions:

125 - 250 RLA ... 225 - 400A fuse clips
251 - 375 RLA ... 450 - 600A fuse clips
376 - 510 RLA ... 601 - 800A fuse provisions
511 - 1300 RLA ... 1000 - 2000A fuse provisions
1301 - 1560 RLA .. 2500A fuse provisions

Dual element fuses must be used, since one-time fuses may be blown by inrush current. Shawmut "Tri-onic" or Bussman "Fusetron" dual element fuses may be used up to 600A. Bussman type KRP-C dual element class L dimension fuses may be used above 601A. Fuses are furnished and installed by others.

When a low voltage starter is ordered without a circuit breaker or disconnect, a terminal block is furnished for connecting incoming power leads to the starter. Short circuit protection and disconnect means must be furnished and installed by others, upstream of the starter.

Power Wiring

Power wiring is divided into two categories:

- Incoming power leads to the starter
- Power leads from the starter to the compressor motor

Incoming power leads to the starter are sized using this formula:

$$\text{Minimum Ampacity} = \frac{\text{Compressor RLA} \times 125\%}{\text{Leads Per Terminal}}$$

Leads must be in multiples of three and all leads must be of the same size and length.

Motor leads for compressors used with across-the-line, primary reactor or auto - transformer starters are sized in the same manner as incoming power leads to the starter.

Motor leads for compressors used with star-delta starters are sized using the formula:

$$\text{Minimum Ampacity} = \frac{\text{Compressor RLA} \times 125\% \times 58\%}{\text{Leads Per Terminal}}$$

Leads must be in multiples of six and all leads must be of the same size and length.

The accompanying wire selection table, Table 3, may be used to help select power wiring for starters and compressor motors. The table is read directly in compressor motor RLA. All safety factors and derating factors for more than three conductors in one conduit are already figured. The current draw of the control power transformer is amply covered by the safety factor.

Example #1

- 460 volt compressor drawing 300 RLA using an across-the-line starter.
- Starter leads and motor leads are the same size.

Referring to the wire selection table, the following could be used:

1 conduit containing 3 - 500 MCM conductors,
1 conduit containing 6 - 250 MCM conductors,
2 conduits each containing 3 - #000 conductors,
etc.

Example #2

- 460 volt compressor drawing 300 RLA using a star-delta starter.
- Starter leads are the same size as in Example #1.

Motor leads could be:

1 conduit containing 6 - 300 MCM conductors,
2 conduits each containing 3 - #0000 conductors, 2 conduits each containing 6 - #0 conductors, etc.

Table 3 - Wire Selection (NEC 1987)

Wire Size 75C Copper	Rated Load Amps (Nameplate)							
	Supply Leads For *All* Starters Motor Leads For Across-The-Line, Auto-Transformer Or Primary Reactor Starters							
	1 Conduit 3 Wires	1 Conduit 6 Wires	2 Conduits 3 Wires Ea	3 Conduits 3 Wires Ea	2 Conduits 6 Wires Ea	4 Conduits 3 Wires Ea	5 Conduits 3 Wires Ea	6 Conduits 3 Wires Ea
8	40	*	*	*	*	*	*	*
6	52							
4	68							
3	80							
2	92	*	*	*	*	*	*	*
1	104							
0	120	192	240	360	384	480	600	720
00	140	224	280	420	448	560	700	840
000	160	256	320	480	512	640	800	960
0000	184	294	368	552	588	736	920	1104
250	204	326	408	612	652	816	1020	1224
300	228	364	456	684	729	912	1140	1368
350	248	396	496	744	793	992	1240	1488
400	268	428	536	804	857	1072	1340	1608
500	304	486	608	912	972	1216	1520	1824
600	336	537	672	1008	1075	1344	1680	2016

Wire Size 75C Copper	Rated Load Amps (Nameplate)					
	Motor Leads For Star-Delta Starter					
	1 Conduit 6 Wires	2 Conduits 3 Wires Ea	2 Conduits 6 Wires Ea	4 Conduits 3 Wires Ea	3 Conduits 6 Wires Ea	6 Conduits 3 Wires Ea
8	55	69	*	*	*	*
6	72	90				
4	94	117				
3	110	138				
2	127	159	*	*	*	*
1	143	179				
0	166	207	331	413	496	620
00	193	242	386	482	579	724
000	221	276	441	551	662	827
0000	254	318	507	634	761	951
250	282	352	562	703	844	1055
300	315	394	628	786	943	1179
350	343	429	684	855	1026	1282
400	370	463	739	924	1108	1386
500	420	525	838	1048	1257	1572
600	465	581	926	1158	1390	1737

* Conductors to the starter and motor connected in parallel (electrically joined at both ends to form a single conductor) must be of size #0 (1/0) or larger (NEC 310-4). Each phase must be equally represented in each conduit.

Starter Options

The following is a list of options available for a starter. Some options are listed in the Price Sheet as standard options and the price is quoted. Those options not quoted in the current Price Sheet must be quoted by the La Crosse CenTraVac Sales Group.

Where necessary, some options are explained in the "Definitions" section of this manual.

Following the list of options are a number of wiring diagrams showing how some of the options are wired in a typical starter.

Options:

- Additional Starter Interlocks (2 SPDT Switches)
- Adjustable Undervoltage Relay With Reset
- Ammeters
- California Code Compliance
- C.S.A. Label
- Differential Protection (Figure 5)
- Ground Fault Protection (Figures 6 and 7)
- Indicating Pilot Lights (Press To Test Type)
- Lightning Arresters (Figure 8)
- Overvoltage Relay With Reset
- Power Factor Correction Capacitor (Figure 9)
- Surge Capacitors (Figure 8)
- Transducer, Current Type, 4 -20Milliamp (Figure 10)
- Transducer, Voltage Type, 4-20 Milliamp (Figure 11)
- Transducer, Watt Type, 4-20 Milliamp
- U.L. Label
- Undervoltage Relay With Reset
- Voltmeters
- Watt Hour Meter,Including Current Transformers, (Figure 12)
- Watt Hour Meter With Demand Register
- Watt Hour Meter With Pulse Initiator
- Wattmeter

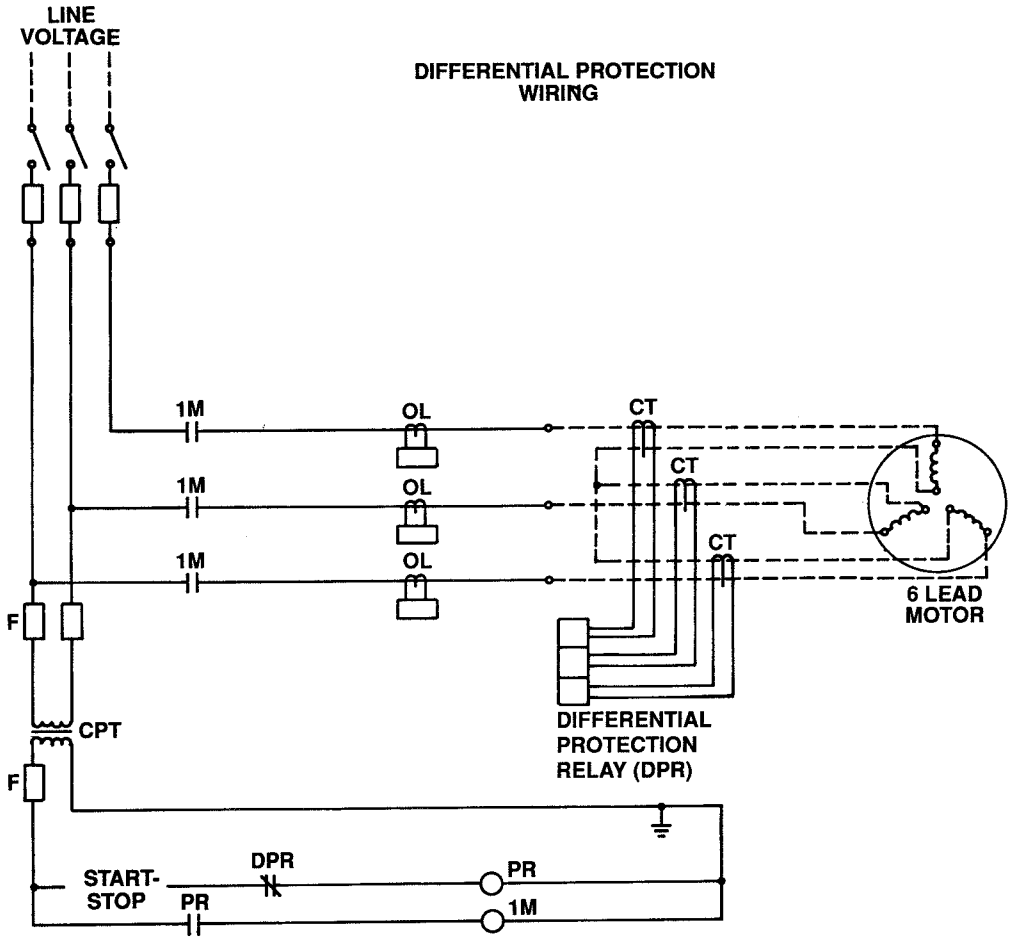

Figure 5

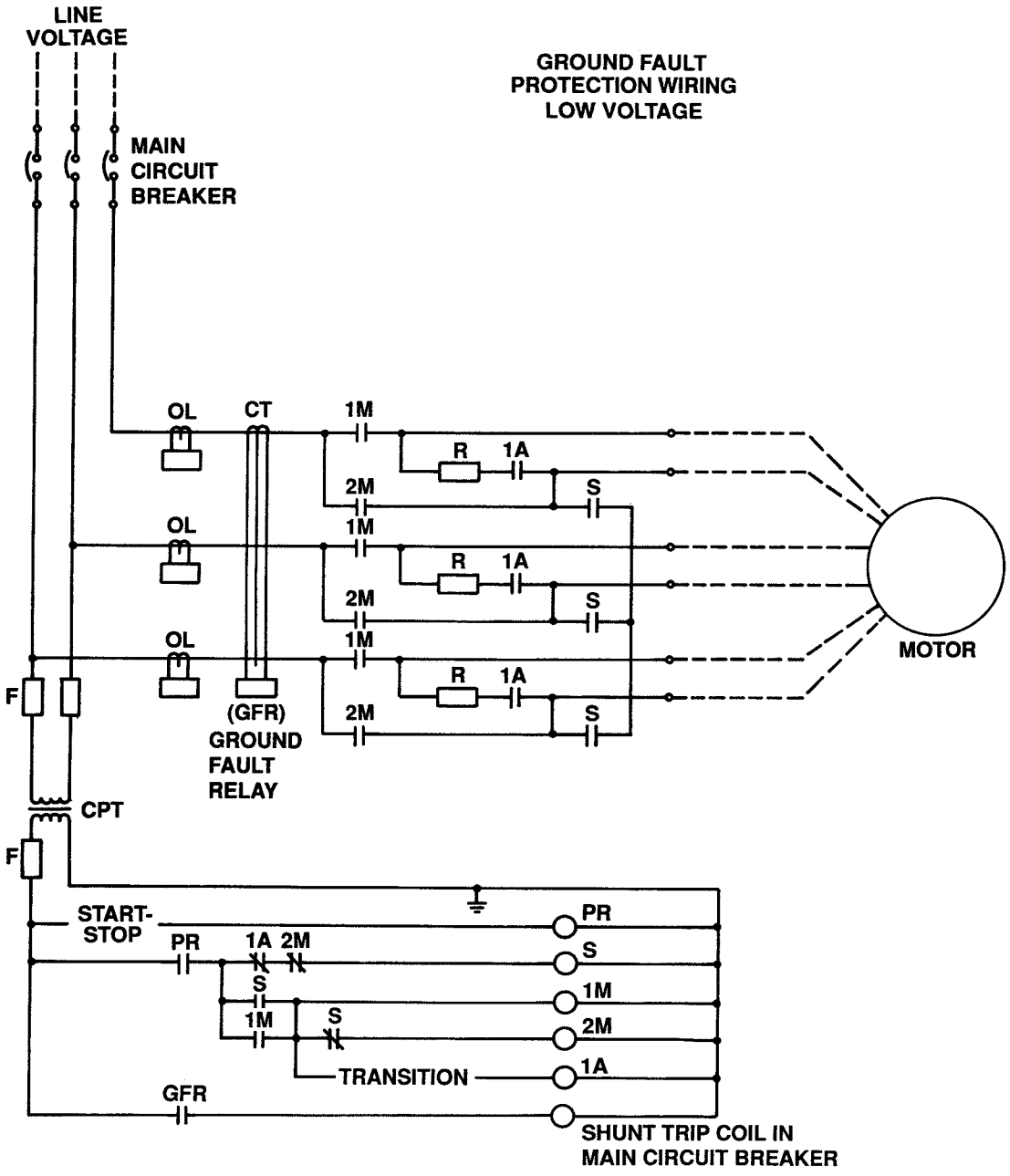
LINE
VOLTAGE
GROUND FAULT
PROTECTION WIRING
LOW VOLTAGE
MAIN
CIRCUIT
BREAKER
OL
CT
1M
R
1A
2M
S
MOTOR
F
(GFR)
GROUND
FAULT
RELAY
CPT
START-
STOP
PR
TRANSITION
GFR
SHUNT TRIP COIL IN
MAIN CIRCUIT BREAKER

Figure 6

Starter Options

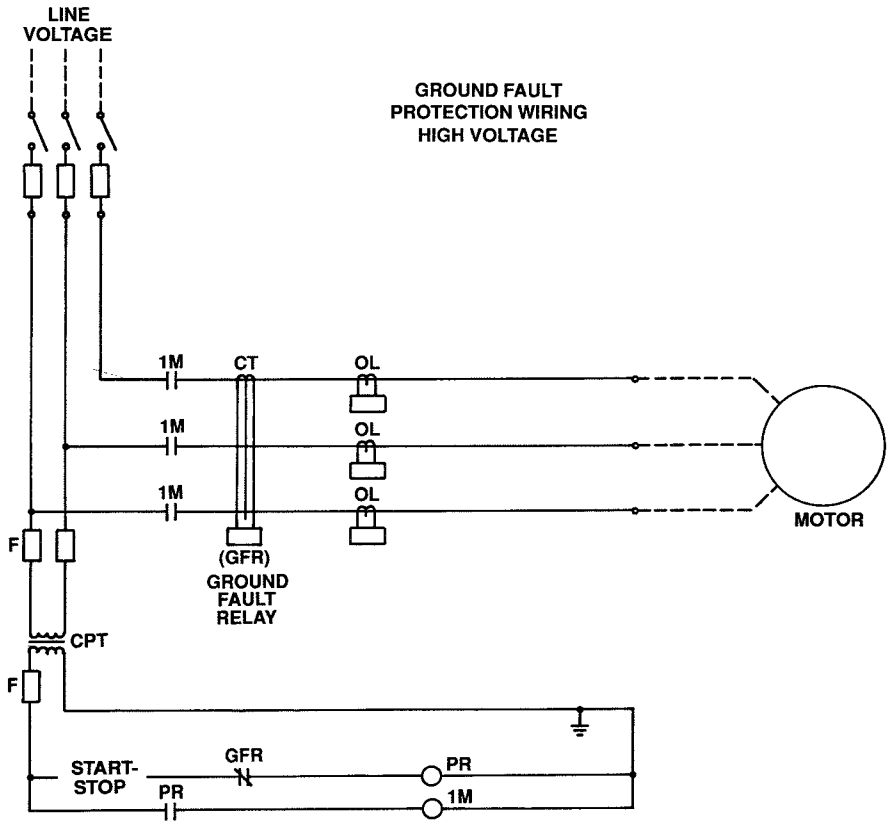

Figure 7

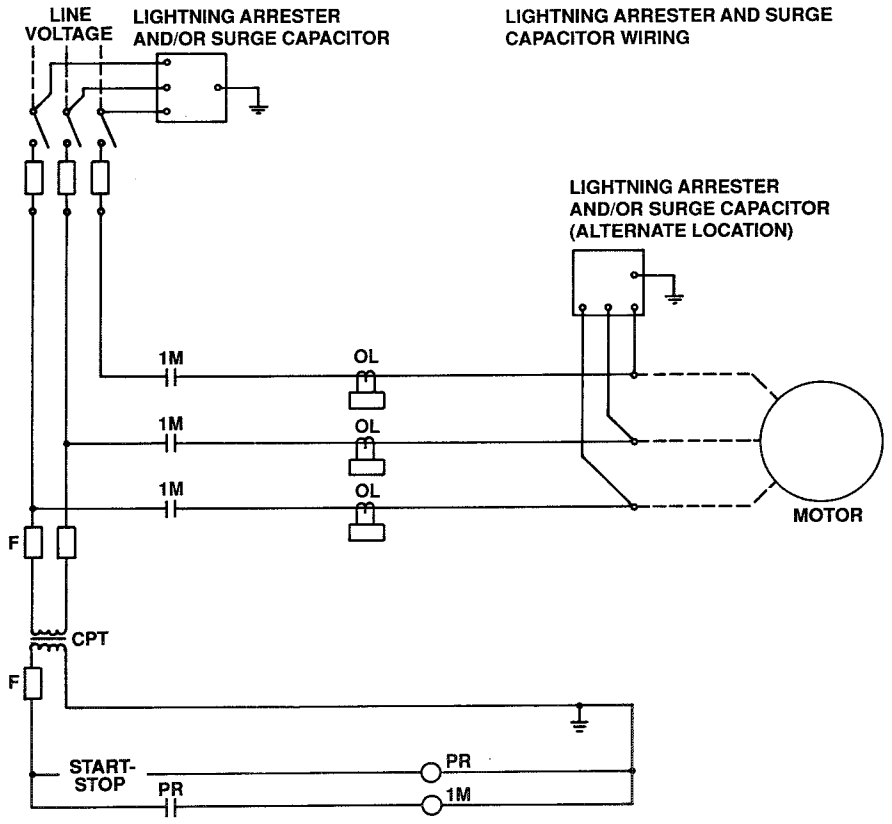

Figure 8

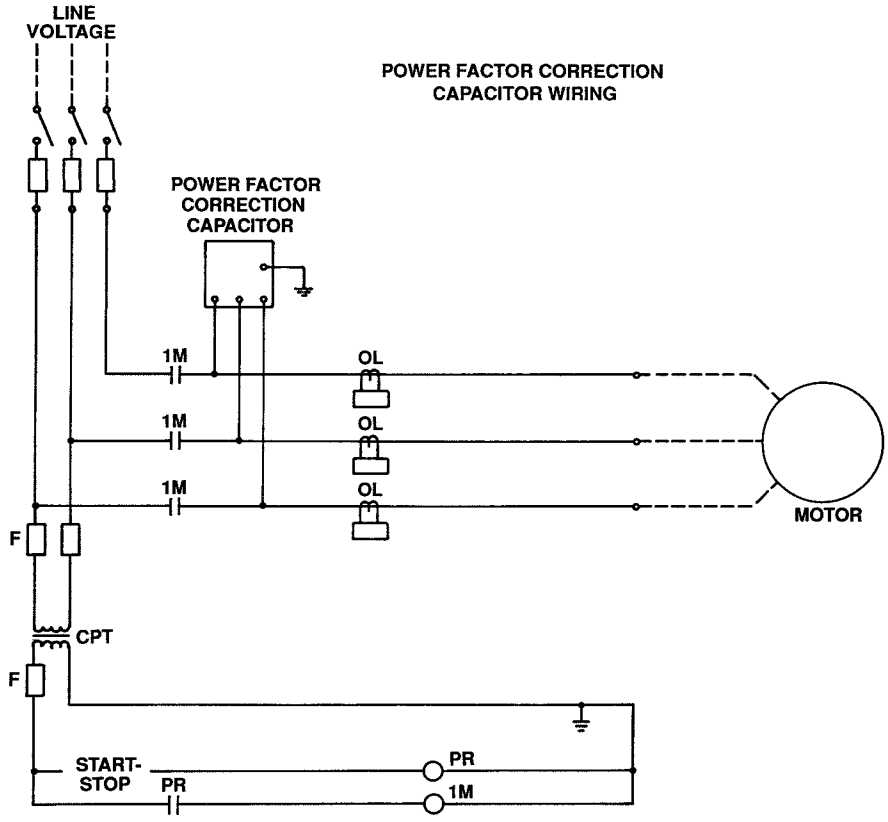

Figure 9

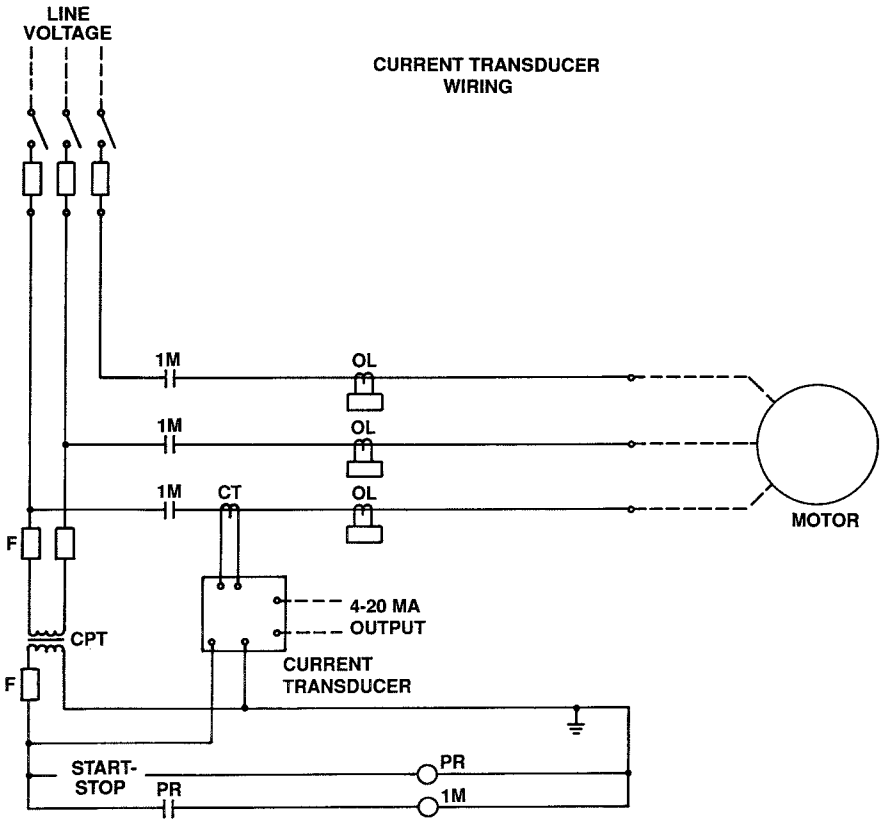

Figure 10

Starter Options

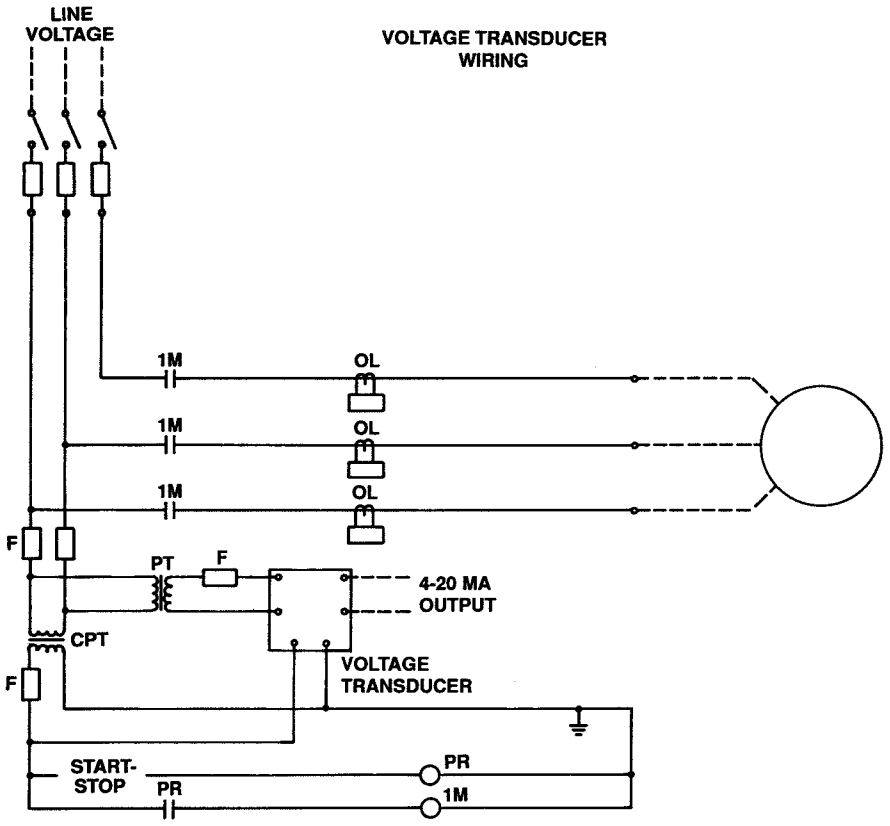

Figure 11

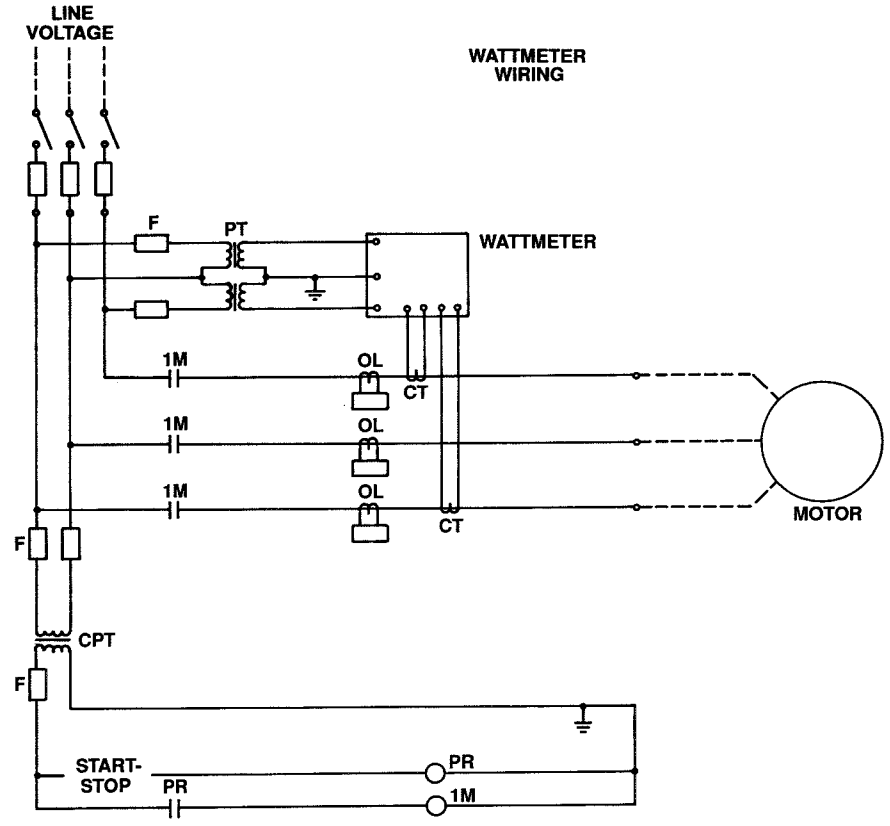

Figure 12

Submittals

All remotely-mounted starters require a set of submittal prints, showing a wiring schematic, cabinet size, wiring entrance and exit areas and lugs furnished. All starters ordered through Trane must have their submittals reviewed by Applications Engineering. The submittals are filed by sales order number and shipment year.

All starters ordered by others must have their submittals sent to the Trane Applications Engineering Department in La Crosse for review. This free service will help keep Trane, the customer and the starter manufacturer out of trouble.

The following are typical cabinet dimensions for free-standing starters.

Low Voltage

208 - 600 Volt
Star-Delta Starter
Cable Entry - Top Or Bottom

These dimensions are for reference only. Refer to the particular starter submittal for exact cabinet size, cable entry area and lug sizes.

Disconnect Means	Max. RLA
Main Lugs Only	606
Circuit Breaker	606
Non - Fused Disconnect	606

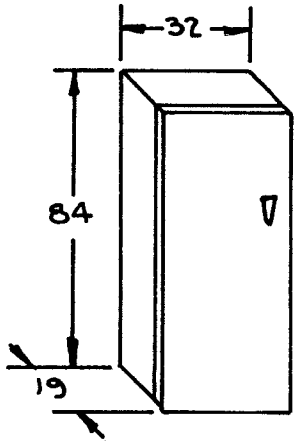

Disconnect Means	Max. RLA
Main Lugs Only	2100
Circuit Breaker	960
Non - Fused Disconnect	1043

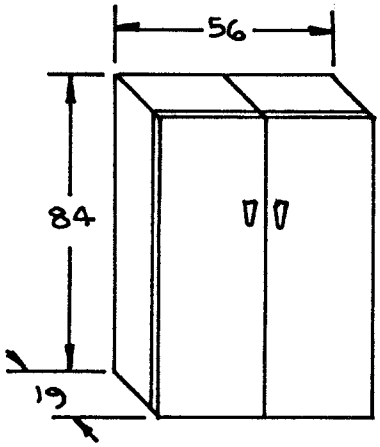

Submittals

Low Voltage (Continued)

Disconnect Means	Max. RLA
Circuit Breaker Non - Fused Disconnect	1600 2104

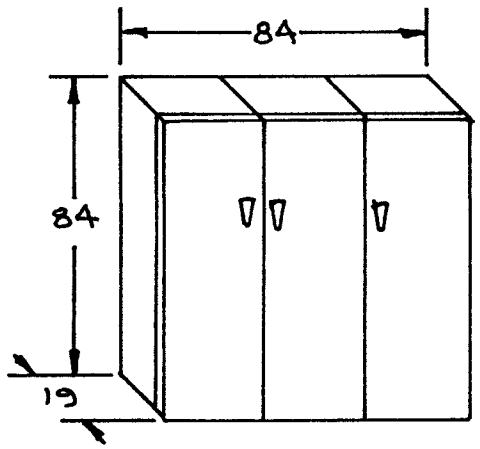

High Voltage

2300 - 4160 Volt

These dimensions are for reference only. Refer to the particular starter submittal for exact cabinet size, cable entry area and lug sizes.

Across -The-Line Starter.
Cable Entry - Top Standard,
Bottom Entry Available On Request.

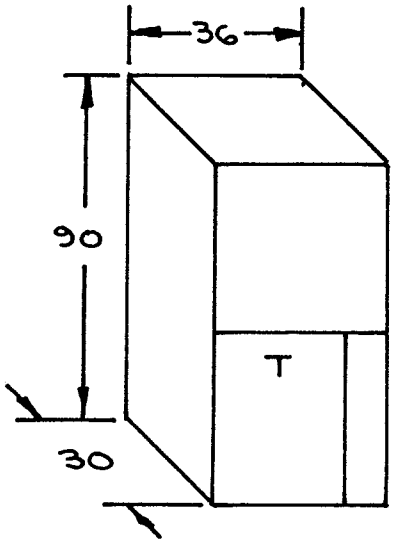

Primary Reactor Or
Auto-Transformer Starter.
Cable Entry - Top Standard,
Bottom Entry Available On Request.

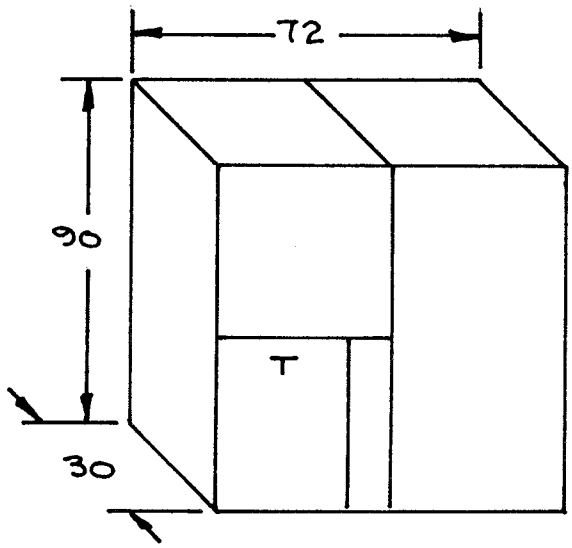

Definitions

In this section, the following listing of terms commonly associated with starters, motors, accessories and electrical power service is defined.

- Acceleration Time
- Advanced Motor Protection System
- Air Break
- Aluminum Conductors
- Amps
- Anti-Recycle Protection
- Bus
- California Code
- Circuit Breaker
- Contactor
- Control Power Transformer
- Corona
- Current Limiting Fuse (See Fuse)
- Current Transformer
- Differential Protection
- Differential Relay
- Disconnect
- Distribution Fault
- Enclosure
- Fuse
- Ground Fault
- Ground Fault Protection
- Grounding
- Gutless Circuit Breaker
- Inrush Current
- Interlock
- Interrupting Capacity
- Ionization
- I Q 2000™
- I Q Data Plus™
- Isolation Switch
- Kirk Key
- Lightning Arrester
- Locked Rotor Amps
- LOD TRAK™
- Lug
- Minimum Circuit Ampacity
- Overload Protection
- Overload Relay
- Phase Failure
- Phase Imbalance
- Phase Reversal
- Phase Failure/Phase Reversal Relay
- Pilot Relay
- Power Factor
- Power Factor Correction Capacitor
- Rated Load Amps
- Relay
- RTD
- Short Circuit
- Shunt Trip
- Single Phase
- Solid State Overload (See Overload Protection)
- Solid State Starter
- Starter
- Stress Cone
- Surge Capacitor
- Switch Gear
- Transducer
- Transition - Closed And Open
- Vacuum Breaker
- Voltage
- Voltage Monitoring Relays (Overvoltage And Undervoltage)
- Wattmeter
- Watt Hour Demand Register
- Watt Hour Meter
- Watt Hour Meter With Pulse Initiator
- Withstand Rating

Acceleration Time ... the time it takes a motor to reach full design speed from the moment power is applied to the motor. Typical CenTra-Vac® motor acceleration times associated with various starter types are listed in Table 2, page 3.

Advanced Motor Protection System ... motor protection provided, as standard, by the CenTra-Vac® microprocessor-based control panel. By monitoring current in each of the three motor power phases, the panel provides protection throughout the motor starting and running modes from the adverse effects of phase imbalance, phase failure, phase reversal or electrical distribution fault. Sensing any of these faults, the panel trips-out the motor instantaneously and provides a diagnostic display. Automatic restart is provided after restoration of power when the stoppage is caused by distribution fault or extended power loss.

Air Break ... contacts exposed to open air that rely on an air gap to keep an electrical circuit open (see "Vacuum Break", page 27).

Aluminum Conductors ... Trane requires that copper conductors only be used for power wiring. Aluminum conductors are not suitable for the following three reasons:

Definitions

1. Galvanic corrosion
2. Probability of connection failure
3. Terminal block design

Further discussion of this subject may be found in Trane Engineering Bulletin EB-MSCR-40.

Amps - Current

LRA - Locked Rotor Amps ... the current a motor draws when it is connected to the line and the rotor shaft is held stationary. LRA is typically 5 to 7 times full load amps (FLA).

FLA - Full Load Amps ... the current a motor draws when it is loaded to its rated capacity.

RLA - Rated Load Amps Or Running Load Amps ... the current a motor draws when performing a specific task. For example, the current drawn to develop a rated tonnage or capacity of a CenTraVac®. RLA is always equal to or less than FLA. RLA is shown on the CenTraVac nameplate and is used to size conductors.

Anti-Recycle Protection ... a control or control method that limits the number of compressor starts within a given time period. Traditionally, a CenTraVac is limited to one start every 30 minutes (30 minutes from start-to-start). This protection is a standard feature of the CenTraVac control panel.

Bus ... a bar of conductive material, usually copper, used to carry large electrical currents to supply multiple circuits or components.

California Code ... a list of requirements for electrical devices:

1. All overloads must have external resets.

2. All control circuits must be disconnected when main circuit breaker or disconnect switch is open.

If no circuit breaker of disconnect switch is supplied:

A. Each control circuit must have a pull-apart fuse block or toggle switch on all control fuses.

B. Separate source control power requires a pull-apart terminal block and "foreign circuit" label clearly displayed.

3. The top of any fuse and the center of any pull -apart fuse handle, circuit breaker or disconnect handle must not be more than 78 inches from the floor in the handle's highest position.

4. All components that must be renewed, operated or repaired must be arranged so that it is unnecessary to reach over, through or past energized bus (or lugs) to work on de-energized parts and arranged to prevent accidental contact with eneregized parts caused by a tool slipping during maintenance.

If energization of parts of the equipment is necessary or likely during maintenance:

A. Insulate all bus bars

B. Relocate or rearrange components in stand-off mounting panels.

5. Label all components.

Label all fuses, indicating which control circuit each is in.

Label all toggle switches and pull-apart fuse blocks, indicating which control circuit each is in.

6. Insulation on wires terminating in compression or crimp type lugs is to be stripped back only to the end of the lug barrel. Wires must not be nicked or have strands missing.

Circuit Breaker ... a device that protects a circuit by opening its contacts when its current responsive element senses over-current or short circuit current. A circuit breaker protects wires and electrical components from further damage if any one component experiences a short circuit. See "Disconnect Means And Short Circuit Protection", page 8.

Contactor ... essentially a multi-pole relay whose contacts are rated to carry line current. A contactor connects a motor to and disconnects it from line power. The coil of a contactor may be operated by line voltage, control voltage or through a rectifier, DC voltage.

Control Power Transformer (CPT) ... a device that reduces line voltage to control voltage (i.e., 480V to 120V). The control power transformer of a CenTraVac is usually located in the starter. A 3KVA transformer is provided as standard in current CenTraVac starters.

Corona ... a visible, pale glow surrounding an insulated conductor carrying high voltage (over 2000V). Ozone odor is present and the air around the wire becomes ionized. An increase in voltage may cause the corona effect of adjacent wires to increase until spark-over occurs. (See "Stress Cone", page 25.)

Current Limiting Fuse ...See "Fuse."

Current Transformer ... a device that produces a reduced current signal that is proportional to motor current. A current transformer may resemble a square or round doughnut. The motor lead passes through the hole of the current transformer and a reduced, proportional current signal is obtained at the current transformer leads. There is no direct electrical connection from the line to the current transformer. The voltage in the output circuit of a current transformer will be whatever voltage is necessary to drive the output current through the load with the voltage limited only by the line power or saturation level of the current transformer. Therefore, the secondary of a current transformer must never see an open circuit.

Differential Protection ... a means of detecting current leakage in a motor from winding-to-winding or from winding-to-ground. This requires that the motor be 6 lead. Three current transformers, one on each motor phase, monitor the current in and the current out of each of the motor windings. If, due to leakage, the current in and the current out are not identical in each winding, a current will be induced in the secondary of one or more of the current transformers. This induced current will energize a current sensitive relay which will open a contactor and de-energize the motor.

Differential protection can be furnished for high voltage starters as an option.

Differential protection is not applicable to low voltage, star-delta starters.

Differential Relay ... a current sensitive relay that has three coils, each connected to one of the current transformers used for differential protection. Energizing any one of the three coils will operate the relay.

A differential relay is furnished with the differential protection option.

Disconnect ... a device for manually isolating an electrical circuit. (See "Disconnect Means And Short Circuit Protection", page 8).

Distribution Fault ... a loss of main power. When main power is lost, a motor acts as a generator while its magnetic field persists during coast-down. Under certain circumstances, a CenTraVac motor, upon a power loss, can support the control circuitry for up to 60 cycles. During this time, the main contactor is closed , but the motor is slowing down. If power is restored within this 60 cycle period, the motor may be subjected to very high torques as the motor tries to align itself with the newly reestablished rotating magnetic field.
These high torques may be damaging to motor windings, keyways and impellers.

Distribution fault protection is provided as standard on all CenTraVacs with the solid state overload or the microprocessor control panel.

Enclosure ... the starter panel. The standard enclosure is NEMA Type 1, general purpose-indoor. Other enclosure classifications to meet requirements of different environments are available as special options.

Fuse ... a device that protects a circuit by fusing (melting) open its current-responsive element due to an overcurrent or short circuit current. A fuse protects wires and components from further damage if any one component experiences a short circuit.

A dual element fuse is a fuse having current-responsive elements of two different fusing characteristics, in series, in a single cartridge. A dual element fuse is required to carry 500 percent of its current rating for a minimum of 10 seconds. Therefore, one of the current-responsive elements will have inverse time characteristics while the other element will handle larger currents without intentional time delay. Since all CenTraVacs draw inrush currents in excess of this rated minimum ampacity during acceleration, all low voltage CenTraVacs with fuse protection must use dual element fuses.

The NEC code allows a fuse rating that is a maximum of 175 percent of RLA, but allows a maximum of 225 percent, if necessary, to allow a motor to accelerate without blowing the fuses.CenTraVac dual element fuses are sized at 150 percent to 195 percent RLA.

Definitions

A current limiting fuse is a fuse that recognizes the rate of current increase and will fuse its element and open the circuit in less than one-quarter of an electrical cycle in the event of a short circuit. Thus, the total short circuit current available never passes through the current limiting fuse. CenTraVac® high voltage starters contain three current limiting fuses as standard.

Ground Fault ... a leakage of line current to ground. Typically ground faults are caused by breakdown or cracking of wire insulation.

Ground Fault Protection

Low Voltage ... ground fault protection consists of a ground fault sensor, a ground fault relay and a disconnect device (circuit breaker) equipped with a shunt trip device.

The ground fault sensor is a specially rated current transformer and must be applied only with a ground fault relay. Ground fault sensors cannot be used with any other equipment.

The ground fault relay is a relay designed to work with a ground fault sensor. The current level required to activate the ground fault relay is adjustable. The response speed (time delay) is also adjustable to avoid nuisance trips. All ground fault relays require a manual reset. The time-current tripping curve of a ground fault relay is nearly instantaneous when the current setting and time delay have been exceeded. The contacts of the ground fault relay energize a shunt trip device to open the circuit and isolate the ground.

The shunt trip device is a circuit breaker with a shunt trip coil. Such a circuit breaker can be opened manually, opened by its current sensing element (short circuit) or opened by energizing its shunt trip coil. A circuit breaker is used to open the circuit because it is capable of successfully interrupting fault current and the current to ground may be catastrophic.

High Voltage ... ground fault protection consists of a ground fault sensor and ground fault relay. The relay contacts interrupt control power to the main contactors. All high voltage starters are equipped with current limiting fuses. In the event of a catastrophic ground, the current limiting fuses would react much faster than the ground fault protection relay.Therefore, the fuses would perform the act of interrupting the circuit and isolating the ground.

The minimum setting of the ground fault protection system should be 20 percent of the disconnect rating with a 10 cycle time delay.

Grounding ... Electrical refrigeration components such as motors and control panels must be grounded for the protection of maintenance and service personnel.

Equipment ground connection bolts are provided in the control panel, the motor junction box and in the starter of all CenTraVacs. On those CenTraVacs where the control panel is isolated, grounding straps are installed to ground the control panel to the chiller frame. Thus, all pieces of a CenTraVac are provided with an individual equipment ground.

It is the responsibility of the installing contractor to ground the CenTraVac equipment to an earth ground per NEC and local codes. NEC specifies minimum ground conductor sizes in Tables 250-94 and 250-95 (1987 NEC).

"Gutless" Circuit Breaker ...a circuit breaker without a thermal or magnetic overcurrent element. It is used solely as a manual disconnect means. See "Disconnect Means And Short Circuit Protection", page 8.

Inrush Current ... the current drawn by a motor during acceleration. Inrush current for various types of starters (in percent of LRA) is given in Table 2, page 3.

Interlock - Electrical ... auxiliary contacts on a contactor, used typically in control voltage circuits, to monitor the position of the contactor. These auxiliary contacts may be normally open or normally closed or convertible.

Interlock - Mechanical ... bars, levers or catches that physically prevent operation of a device under certain circumstances. (i.e., CenTraVac starter door may not be opened if a circuit breaker is closed.)

Interrupting Capacity ... the rated maximum current that a device can successfully interrupt without damage to itself.

Ionization ... Insulated conductors carrying high voltage (over 2000V) are subject to ionization.

Ionization results in the formation of pockets of gas in the layers of the insulation creating areas of unequal stress that may lead to premature breakdown of the insulation. (See "Stress Cone", page 25.)

I.Q. 2000™ ... a Westinghouse device. It is a microprocessor controlled motor command system designed to be used in a Westinghouse Ampgard® starter. It uses current, voltage (optional) and motor temperature (optional) inputs to provide motor overload, overtemperature, monitoring and control functions.

All necessary controls and safeties for a CenTraVac are provided with the standard CenTraVac controls. The I.Q. 2000 is redundant. If an I.Q. 2000 is specified, its overload function should be set at 150 percent RLA. It may then act as back-up overload protection.

I.Q. DATA PLUS™... a Westinghouse device. It is a microprocessor-based monitoring and protective device. It provides digital readout of selectable phase current, phase voltage, megawatts, power factor, frequency and megawatt demand. It also provides system voltage protection - namely phase loss, phase imbalance, phase reversal, overvoltage (adjustable from 105 to 140 percent) and undervoltage (adjustable from 95 to 60 percent). This device has dry SPDT trip contacts and SPDT alarm contacts.

Isolation Switch ... a device used to connect and disconnect a load to and from the line. Since an isolation switch does not have an interrupting rating, it must not be opened under load. See "Disconnect Means And Short Circuit Protection", page 8.

Kirk Key ... a locking arrangement between a remote disconnect switch and a starter that is designed to prevent the closing of the remote switch and the powering of a starter that is being serviced.

A single key is used. It is held captive in the disconnect switch. The disconnect switch must be opened and then locked open. The key may then be removed and used to unlock the starter. The key remains captive in the starter until the starter door is closed and locked. The key may then be removed and used to unlock the disconnect switch. The switch may then be closed.

Lightning Arrester ... a device that protects electrical equipment from high voltage spikes by providing a high resistance path (an air gap) to ground. The device provides protection by consistently conducting to ground when the magnitude of the voltage exceeds a predetermined value.

Although lightning arresters may be used alone, they are used usually in conjunction with surge protection capacitors.

The function of a lightning arrester is to limit the magnitude of a voltage spike. The function of a surge capacitor is to limit the rate of rise of a voltage spike. See "Surge Capacitor", page 26.

Lightning arresters are a starter option.

Locked Rotor Amps (LRA) ... See "Amps", page 20.

Lod Trak™... a General Electric electronic device that monitors current and (optionally) motor temperature. Lod Trak provides motor overload, ground fault, phase failure, phase reversal, phase imbalance and (optionally) motor overtemperature protection. All of the functions (except ground fault) are performed by the CenTraVac microprocessor control panel. Thus, the functions of the Lod Trak are redundant. If Lod Trak is used, its overload trip setting should be set at 150 percent RLA. The Lod Trak may then serve as a back-up overload relay.

Lug ... a device used to mechanically connect a conductor (wire) to a piece of electrical equipment. Lugs are furnished by the starter vendor. The range of wire sizes that the lugs will accept are listed in the starter submittals.

The range of wire sizes indicates the maximum size wire that will fit into the lug hole and the minimum wire size that the screw can securely clamp in place.

Minimum Circuit Ampacity ... This term appears on a CenTraVac nameplate and is used to determine the size and number of conductors bringing line power to the starter. The formula for minimum circuit ampacity is 125 percent RLA of the largest motor plus 100 percent RLA of all other loads (control power transformer, oil pump motor, purge motor).

Definitions

Overload Protection ... a scheme or device that monitors motor current and interrupts control power to the main contactor(s), disconnecting the motor from the line, if motor current exceeds preset limits of current and time. Motor current may be monitored directly or through current transformers.

Overload protection may be performed by a device called an overload relay or it may be a function of a multi-purpose device such as the CenTraVac® microprocessor control module.

Overload relays may be thermal, magnetic or electronic.

Thermal overload relays are not suitable for use on a CenTraVac because of uncertain action caused by the varying acceleration times of individual chillers. Thermal overloads are also influenced by ambient temperature.

Magnetic overload relays are predictable and absolute. Inverse time magnetic overload relays can be set to pass inrush current at start-up without tripping, but still provide adequate running overload protection. Allen Bradley Bulletin 810 dashpot type magnetic overload relays were standard equipment in CenTraVac starters until 1980. They used an electromagnetically operated piston in a silicone liquid filled chamber (dashpot) to provide preset time delay functions.

The CVHB and CVHE CenTraVacs used a solid state overload relay from 1980 to 1986. This solid state overload relay was manufactured by Cutler Hammer. It performed several functions beyond overload protection.

1. Protection from excessive acceleration time.

2. Initiation of transition after the motor reached full speed.

3. Distribution fault protection.

Since 1986, CVHB and CVHE CenTraVacs have been equipped with a microprocessor control module. All overload relay functions that were performed by the solid state overload relay are now performed by the microprocessor control module in the CenTraVac control panel.

All CenTraVac overload trips require manual reset.

Overload Relay ... a device that senses current flow to a motor. The relay can be set to trip at a certain value. If the motor attempts to draw current in excess of this value, the relay will trip, de-energizing the contactor coil, disconnecting the motor from the line.

Phase Failure ... an opening in one of the three main power leads caused by a blown fuse or broken conductor. This results in only one phase being delivered to the load. Thus, phase failure is the same as single phasing. Phase failure protection is standard on CenTraVacs with microprocessor control panels and is available as a starter option on other generations of CenTraVacs. (See "Advanced Motor Protection System", page 19.)

Phase Imbalance ... an imbalance in the current level or voltage level among the three phases. Phase imbalance can cause motor overheating. (See "Advanced Motor Protection System", page 19.)

Phase Reversal ... a change in the desired electrical phase relationship. Phase reversal causes motors to rotate in the wrong direction. (See "Advanced Motor Protection System", page 19.)

Phase Failure/Phase Reversal Relay ... a device that monitors the phase relationship and opens a contact to stop the compressor motor in the event of phase failure, phase reversal or phase imbalance.

A phase failure/phase reversal relay was a starter option before the introduction of the microprocessor-based CenTraVac panel. The advanced motor protection provided by the microprocessor performs the functions of a phase failure/phase reversal relay.

Pilot Relay ... a term describing the fact that all CenTraVac starters start and stop the compressor by means of a relay that responds to commands from the CenTraVac control panel. Push-to-start pushbuttons or any other forms of manual starting of the compressor are not allowed. The CenTraVac safeties in the control panel must not be bypassed.

Power Factor ... the ratio of real power (watts) to apparent power (volt-amps). Induction motors, such as CenTraVac compressor

motors, require some energy for magnetizing that does no actual work and is not registered on a wattmeter.

For example, a CenTraVac in a 480 volt system, drawing 200 amps at full load, has a total apparent power requirement of 480V x 200A = 96,000VA. A wattmeter in this installation may read 86,400 watts at full load. The power factor is:

$$PF = \frac{\text{Working Power (Watts)}}{\text{Total Power (Volt-Amps)}} =$$

$$\frac{86{,}400 \text{ Watts}}{96{,}000 \text{ VA}} = 90\%$$

A utility must furnish 96,000 VA of power, but it will only be paid for measurable power used - 86,400 watts. Therefore, installations with poor power factors may be charged a premium for electrical power. (See Trane Engineering Bulletin CTV-EB-44.)

Power Factor Correction Capacitors ... may be used to improve the power factor of a CenTraVac by furnishing some of the wattless magnetizing energy required by the motor.

Power factor correction capacitors are a starter option. They are mounted in or on the starter and are wired to the load side of the compressor contáctor. Since the capacitors are wired in parallel with the motor, the maximum capacitor size is determined by the motor manufacturer.

The capacitors furnished as a starter option will correct the compressor motor to approximately 95 percent power factor at full load.

Rated Load Amps Or Running Load Amps (RLA) ... See "Amps", page 20.

Relay ... an electrically-operated device whose contacts switch electrical circuits. A relay is always used as a switching device within a control circuit.

RTD ... resistance temperature device. A device whose electrical resistance varies with its temperature. RTD's may be used to monitor motor winding temperature.

Every CenTraVac motor has three RTD's buried within its stator windings. These RTD's are connected to the CenTraVac control panel. There, a device monitors the resistance (hence, the temperature) of the RTD's and will stop the compressor if the motor winding temperature exceeds a preset level. These are dedicated RTD's and cannot be used for any additional functions.

If motor winding RTD's are required for any other function (I.Q. 2000, LOD TRAK, etc.), the RTD's required must be described and ordered. Then, a specially built motor will be provided.

Short Circuit ... an unintentional direct electrical connection from phase-to-phase or from phase to ground, resulting in low resistance and very high current flow. Short circuits can result in destruction of conductors and components. Short circuits are caused by the breakdown of insulation or poor wiring mechanics.

Shunt Trip ... a tripping coil added to a circuit breaker to provide a means of tripping the circuit breaker with an external signal. See "Ground Fault Protection", page 22.

Single Phase (Single Phasing) ... See "Phase Failure", page 24.

Solid State Starter ... a starter that starts and accelerates a motor at a preset acceleration rate and current limit. A solid state starter performs this function by modulating the current/voltage wave form delivered to the motor.

At the present time, no solid state starter is approved by The Trane Company for use with a CenTraVac with microprocessor controls. If a solid state starter is approved for such use in the future, an Engineering Bulletin will be issued.

Starter ... a device consisting of both a contactor and an overload protection system or device whose purpose is to start and stop a motor and protect that motor from overcurrent.

Stress Cone (Stress Relief Cone) ... Cables carrying above 2000V must have a metallic shield unless the cable is specifically listed or approved for non-shielded use. Shielding is necessary because of the danger of corona or ionization. The purpose of shielding a cable is to confine its dielectric field to the inside of the cable or conductor insulation. The shielding must be grounded at one end.

Definitions

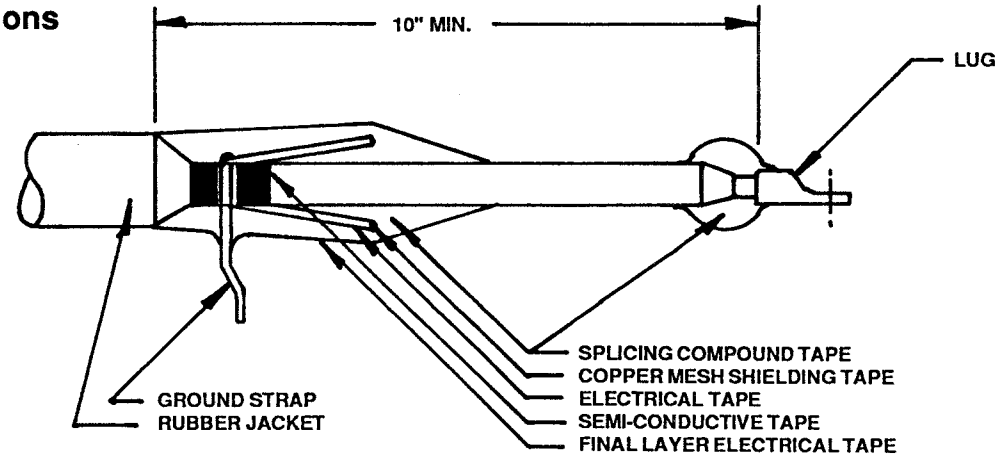

Figure 13

Stress cones are used to reduce and control longitudinal and radial electrical stresses at the cable end to values within safe working limits for the material used to make-up the termination. A typical stress cone, Figure 13, is over 9 inches long. An oversize junction box at the motor is required to accommodate stress cones. Usually the starter can accommodate stress cones in its normal enclosure.

Surge Capacitor ... a device that protects electrical equipment from high voltage spikes by absorbing the peak energy of the spike and then releasing it into the tail of the spike.

Although surge capacitors may be used alone, they are usually used in conjunction with lightning arresters. See "Lightning Arrester", page 23.

Lightning arresters limit the magnitude of a voltage spike. Surge capacitors limit the rate of rise of a voltage spike.

Surge capacitors are a starter option.

Switchgear ... A switchgear type starter is an across-the-line starter that uses a circuit breaker to connect and disconnect the compressor motor to and from the line. Usually a separate power source (i.e., 125 VDC from a battery bank) is used to open and close the circuit breaker on demand.

Switchgear starters should be used with caution. Some switchgear starters contain a relay that will trip the circuit breaker if auxiliary power is lost. Others do not contain this auxiliary power monitoring relay. It may then be impossible to automatically disconnect the compressor motor from the line in case of a compressor, chiller or starter fault, if auxiliary power is lost while the compressor is running.

Transducer ... a device that converts a control signal from one form to another. For example, conversion of a 0 to 20 psig pneumatic control signal to a 4 to 20 milliamp electrical control signal.

Transition

Transition is the action taken by a starter when changing from one configuration to another, such as changing (transitioning) from the star configuration to the delta configuration.

Open Transition ... a term indicating that the motor is disconnected from the line, transition is performed and then the motor is reconnected to the line.

Closed Transition ... a term indicating that the motor remains connected to the line during transition.

All CenTraVac® starters must be closed transition. Open transition starters cause stresses in the motor windings that shorten motor life. CenTraVacs with the solid state overload or microprocessor control will interpret open transition as a distribution fault.

Starters using electro-mechanical overloads initiate transition with a timer set at approximately 25 seconds.

Inrush current is nearly constant during acceleration and then drops quickly to less than RLA when the motor reaches full speed. Starters using the Trane solid state overload or microprocessor control monitor motor current continuously and initiate transition when the motor current drops below 85 percent of RLA.

Vacuum Break ... contacts are encapsulated in an evacuated, ceramic bottle. Since the contacts operate in a vacuum, arcs are quickly extinguished because there are no ionized gases present to support conduction. The claimed advantages are no contact maintenance, long contact life and safety, since there is no exposed arcing.

Vacuum break contacts (when used) are used typically only on high voltage starters.

Voltage ... The following voltages apply to CenTraVacs:

Control Voltage	120VAC
Low Voltage	208 - 600VAC
High Voltage	601 - 6000VAC

The electrical power industry refers to 2000V to 7200V as medium voltage.

Voltage Monitoring Relays

Overvoltage Relay ... a relay and an adjustable line voltage monitor that will stop a CenTraVac if line voltage exceeds a preset value. This overvoltage monitoring system is a lock-out system that requires manual reset at the starter.

Undervoltage Relay ... a non-adjustable relay that is powered directly by line voltage. If line voltage drops below 55 percent nominal voltage, the undervoltage relay will stop the CenTraVac. This relay requires a manual reset at the starter.

Adjustable Undervoltage Relay ... a relay and an adjustable line voltage monitor that will stop a CenTraVac if line voltage drops below a preset value. This undervoltage monitoring system is a lock-out system that requires manual reset at the starter.

These relays are all starter options.

Wattmeter ... a device that displays instantaneous power (watts) in the form of a dial meter or a digital display. When a wattmeter is ordered for a starter, the wattmeter option includes all necessary transformers.

Watt Hour Demand Register ... an option on a watt hour meter that has a dial and pointer that indicates the total power used per time period (i.e., 15 minutes). The movement of the pointer is proportional to the electrical energy used in the unit's time period. At the end of the time period, the mechanism drops back to its starting position while the pointer remains stationary. The pointer will only be moved further when the power demand in a new time period exceeds the power demand in any previous time period. Thus, the demand register indicates the largest power demand in any time period. The demand register may be manually reset to zero to monitor a new series of time periods.

Watt Hour Meter ... a device that measures and registers the cumulative amount of electrical energy used in terms of watt hours (or kilowatt hours).

When a watt hour meter is ordered for a starter, this option includes all necessary transformers.

Watt Hour Meter With Pulse Initiator ... Watt hour meters may be ordered with a pulse initiator. A pulse initiator is a device that generates pulses (contact closures) that are proportional to a definite energy value (watt hours per pulse). Output contacts of pulse initiators are normally connected to pulse-operated demand recorders or used to feed energy consumption information to computers and load controllers.

When ordering pulse initiators, the type of pulses and the pulse rate the end devices will accept must be indicated.

Withstand Rating ... When a short circuit occurs, there is a period of time that the short circuit current passes to the shorted circuit before the protection device (circuit breaker or fuse) can open. This time can be as long as .020 seconds (1 cycle). The withstand rating of a starter is the maximum short circuit current that it can pass safely. Components within the starter may be destroyed, but the starter cabinet will safely contain any sparks or flying debris. U.L. listed starters also have a listed withstand rating.

What Can Contact Failures Teach You?



KLOCKNER-MOELLER

What can contact failures teach you?

by Dr. G. F. R. GALLE, manager, testing department, Klockner-Moeller

Seventeen specific causes of contact failure are illustrated in this exclusive article. Accurate colour reproductions show normal characteristics of each; and ways are suggested to avoid the same trouble in the future.

The life of contactors is essentially dependent on the behaviour of the contacts. Pure silver as contact material has proved highly satisfactory due to many outstanding properties. The shape of the contacts is chosen to guarantee that all required properties (resistance to welding, breaking capacity, continuous current rating, etc.) are maintained. For satisfactory service life, the contacts are designed as butt contacts thus avoiding friction. Contacts in modern control are designed for a relatively long service life and specifications are based on specific current duty diagrams indicating definite service conditions and maximum values for frequency of operations and continuous current. If one of these factors is neglected, a shorter service life or breakdown will result.

A critical examination of the appearance of the contact surfaces will yield many valuable hints as to the nature of the service conditions under which the contacts operated, especially during the most recent period of operation. It is then often possible to make the necessary corrections in order to obtain the utmost economy. Such an examination will also indicate whether or not the contact is nearing the end of its useful life. In the case of breakdown, careful scrutiny of the surfaces often reveals the cause of the trouble.

It is a common occurrence to have users complain about the appearance of contacts, assuming that they are no longer fit for service and that in consequence the unit has not completed the promised service life. In examining these complaints we often find that either the equipment has not nearly reached the end of its useful life or that some incorrect application has caused an excessive load on the apparatus. Often valuable material — sometimes entire contactors which would have given satisfactory performance for many more years — is spoiled. Also, it is often exceedingly difficult to convince the user that his conclusions were incorrect. A convincing explanation of the cause of these defects must be given immediately to the user, since complaints of this nature may prove harmful to the good reputation of control equipment and shake the confidence of the customers in the validity of the equipment life guarantees. The user will be saved further considerable material losses in most cases by a clear presentation of the facts.

At what point has the life of the apparatus ended? The life of an airbreak contactor has come to an end when the over-travel of the contacts has gone down to .5 mm (.02"). Over-travel of the contact assembly is that part of the stroke which the moving contacts would cover after touching the fixed contacts — propelled by the actuating device — if they were not blocked in their movement by the latter. The remaining over-travel of a contactor can be measured by actuating the control mechanism by hand and by determining the distance which the actuating device will cover, applied to the contacts, after the contacts have touched. Measuring the over-travel is the only means of determining whether or not the contacts are approaching the end of their useful life. This procedure is of the utmost importance. It is by no means true that the pure silver used as contact material can be allowed to wear to the last trace for contact making.

These explanations are, however, not meant to invite the making of tests from time to time on our contactors to see whether the end of their service life has been reached. The life of the apparatus can readily be determined in advance by careful selec-

tion of suitable control based on life expectancies as given in our catalogues. Testing should only be necessary after the specified life term has expired, and then only for the purpose of determining whether, due to special circumstances (for example light load conditions) the apparatus may yield a longer service life than indicated in the catalog.
Endurance tests, continuously carried out in our test laboratories, plus the experience gained in actual service confirm with a high degree of probability that equipment used at rated loads will reach the specified life span.
If it is found on checking that the end of the service life has been reached before the apparatus has performed that total number of operations it is rated for, the cause can only be due to a too heavy load or a defect. It is a fortunate fact, however, that contacts of control in normal service or under overload conditions or under the effects of a fault, assume specific appearances, thereby indicating clearly one of these causes.
Most users lack the opportunity of becoming familiar with these characteristics of contacts. For this reason, we pass on the experience gained by a larger number of critical examinations performed on airbreak contactors. To do this, we have selected some typical cases where the appearance of the contacts permits definite conclusions regarding the duty to which the contactors were subjected during their useful life. We trust, however, that before beginning our task, a few words concerning the appearance of pure silver butt contacts of airbreak contactors under normal duty, will be allowed.
The appearance of pure silver contacts, even under normal service conditions is a surprise to many users accustomed to copper contacts. The surface of pure silver contacts constantly changes in colour under normal duty, starting from a light blue hue at the beginning, to a dark colouring toward the end of their useful life.
Many users from the appearance of the contact surfaces, are led to believe that the apparatus will not work reliably and is consequently useless. Our comments on these objections are as follows: The colour changes in the pure silver contact surfaces is a natural phenomenon. It is a very thin film of silver oxide and silver carbonates produced by the effects of arcing. This colouring has no harmful effects whatsoever on the performance of the equipment. It may be said on the contrary that the making capacity of the contactor is considerably increased by the film. We will show later that this film has originally a blue tinge, changing to a deep brown with progressive operative life. No single case has so far come to our knowledge where the discolouration of the contacts has had a harmful effect on the properties of the contactor. Above all, we have found no instance where the current carrying capacity of the contact assembly was in the least diminished through this film.

The following examples are divided into four groups, each group illustrated and each discussed in the following paragraphs.

The first group represents contacts of apparatus having been operated within the permissible ranges of switching capacity, frequency of operations and continuous current rating. The control voltage was kept constant between 90 to 100 per cent of the rated value. These examples will illustrate to the reader the appearance of contacts of equipment, as they should look under ideal service conditions. It must, at the same time be clearly understood that contacts used mainly for making duty look different from those working chiefly under breaking duty. For contactors controlling heavily inductive circuits, the breaking operation represents the higher stress if the starting current remains below the contact welding value or as long as it is not essentially higher than the breaking current. In nearly all induction free or capacitive circuits, the making stress is generally greater than the breaking stress. Moreover, if the starting current is considerably higher than the breaking current, as is the case for example with contactors for condenser control without damping devices, the result will be a pure making stress effect on the contact surfaces.

The second group of examples is representative of contactors working under conditions outside the permissible range without causing definite failures. Conditions of this kind are very undesirable since they are the cause of considerable reduction of the service life of the apparatus. This will jeopardize one of the most valuable properties of our contactors and this is why it is important that these cases be rapidly recognized and remedied.

The third group illustrates those cases where excessive stress on the contact assembly resulted in a rapid development of a defect and failure of the unit. It may be suitable at this stage to review the chief causes of overstress on contactors and to examine their origin and effects.

(a) Exceeding the switching capacity of a contactor.

Exceeding the making capacity of a contactor will produce welded contacts, while exceeding the breaking capacity means — in addition to welded contacts — prolonged arcing. The most common causes for exceeding the breaking capacity of a contactor are:

1. Motors with abnormally high current peak.
2. Transformers with an extremely high flux density.
3. Short time voltage failures with running motor.
4. High proportion of harmonic waves in the mains or connection on opposed phases with condensor contactors.

Under the above specified conditions the breaking capacity is normally indirectly exceeded by exceedingly heavy inching or reversing duty, or through short circuits with a relatively high resistance in the load circuit.

(b) Exceeding the continuous rating of a contactor.

This type of overstress will entail excessive temperature rise of the current path and of the contacts. If this overstress is extremely severe, it may cause direct harm to the contacts as well as indirect injury to other parts of the apparatus. This includes all cases where the allowable ambient temperature is considerably surpassed. The effects of an unduly high ambient are, naturally, similar to those of excessively heated contacts as a consequence of a high current rise with an ambient temperature within permissible limits. The continuous current rating is often impaired by accumulation of dirt on the contact surfaces. Suitable enclosures are therefore of utmost importance.

(c) Variations in control voltage.

Too low a control voltage is of frequent occurrence and of special importance in tracing the causes of defects. It is not sufficient in this case to check as to whether the voltage on the contactor coil is within the permissible range. Often only a temporary drop of the control voltage can be observed, due to the starting current, especially with motors of large outputs. If the control voltage is permanently too low, the result will be a lower making capacity.

An increased control voltage may considerably interfere with the behaviour of the contactor regarding rebound. Contact burning may increase and there is danger of the service life of the contactor being shortened. In extreme cases which occur where a contactor coil for a lower voltage is installed, this may lead to broken parts in the contactor.

The cause for too low a control voltage may in most cases be looked for in excessive resistance of the circuit. The voltage drop in power-and-control transformers, circuits including the control circuits, must not exceed 10 per cent of the rated voltage. It must be considered that the voltage drop in the main and control circuits depends, during the starting of the motor, on its starting current; and during the making response of the contactor, on the latter's inrush current. Neglecting this fact has often been the cause of failures. Unstable control voltage may furthermore be the result of failures in the control circuit as a consequence of accumulated dirt or vibrating control devices.

The fourth group is composed of two examples showing the contacts of two units which carried a short circuit current. This extreme load forcibly produces a considerable deformation of the contact surfaces. Welded contacts will normally result. Up to this day, however, we have not heard of one single case where a flash-over occurred in one of our contactors due to a short-circuit. Neither have we experienced one single flash-over during the tests in our laboratories where our contactors were subjected to short-circuits with and without fuses.
It is, however, advisable to replace a contactor through which a short-circuit current has passed.

First Group: Normal Load

Common Characteristics: Maintained Contours

Photos Nos. 1 and 2
Breaking stress, beginning of service life

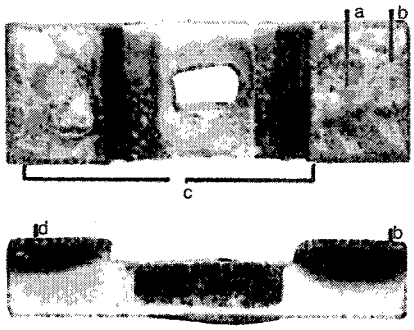

Characteristics:

(*a*) Blue colouring, uniform contact surface
(*b*) Preserved geometrical shape
(*c*) Smooth corners and edges
(*d*) Only tiny silver beads

Photo No. 3
Breaking duty, end of service life

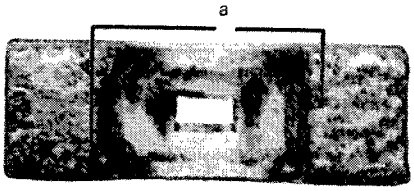

Characteristics:

(*a*) Dark brown colouring

Photo No. 4
Making stress

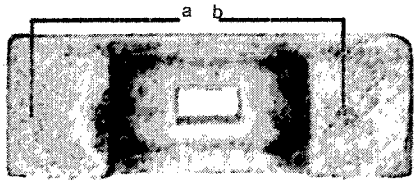

Characteristics:

(*a*) Silvery colouring
(*b*) Surface shows chiselled effect.

Photographs Nos. 1 and 2
show the contacts of a DIL 4 which has interrupted a current corresponding to the maximum normal rating.
The contactor is at the beginning of its service life. The contact surfaces, consequently, show the typical blue colouring resulting from breaking duty. The surface is smooth and uniform in shape. The geometrical form of the contacts has remained practically unchanged, except that the outer corners are slightly rounded and very small silver beads which hardly project over the outer edges of the contacts have formed on the sides.
This picture is typical of silver contacts showing the effects of normal breaking duty.
No harmful effect from this coloured film due to starting could be ascertained in spite of many careful tests. It was, on the other hand, established beyond doubt that the formation of the contact surfaces resulting from the effects of the arc-base being exposed to the outer atmosphere, has an advantageous influence on the welding limit of the contacts.

Photograph No. 3
shows a contact of a DIL 4 at the end of its useful life. This picture clearly shows that the blue colouring of the contact surface vanished gradually toward the end of the service life and that the silver hue has clearly changed to brown or dark brown.
It becomes apparent from the picture that the geometrical shape remains unchanged, provided that the load is kept within admissible limits with regard to intensity, voltage and frequency of operation — this applies particularly to the outer edges of the contact. This brown colouring which may vary to a very dark brown hue has also in this case no harmful effect on the properties of the contact. All required qualities remain fully effective up to the end of the useful life of the contact.

Photograph No. 4
shows the contact of a DIL 4 contactor having undergone making tests with the maximum allowable current at unity power factor.
By comparison with the preceding photos it becomes quite evident that the appearance of the contacts of a contactor used exclusively for making duty is fundamentally different from that of contactors working under making and breaking duty, or solely under breaking duty. The blue colouring of the contact surface typical for breaking duty is not apparent in this instance. The surface, on the contrary, has a silvery white appearance as of pure metal and gives the effect of a finely chiselled surface with a pattern as if applied by light blows. This pattern is produced by a gradual material transfer taking place at every contact making at the first point of contact, causing tiny rough spots on the contact surface. Due to the fact that the first point of contact varies at each switching operation, the tiny rough spots are distributed

over the entire contact surface, producing this chiselled effect.
It is surprising to observe that this metallic surface does not corrode in spite of the marked affinity of silver for the hydrogen sulfide gas in the air. This form of surface shows also no trace of corrosion nor change of colouring even after a prolonged idle period without switching operations. The contacts will retain their geometrical form under exclusive making duty, provided the breaking capacity is not exceeded. The original form maintained during the service period, is evidence of normal load within permissible limits; with proof to the contrary, if the shape shows marked deformation.

Photographs 5 and 6
show the contacts of a DIL 8 contactor. The load has remained within permissible limits. The contactor is in the first half of its service life.
Here, too, the typical blue colouring of breaking duty, the formation of a smooth and uniform film on the surface, and the preservation of the original form, especially of the outer edges, are clearly visible. The silver beads on the edges are somewhat larger than those observed in the case of the DIL 4, since the magnitude of the current is correspondingly greater. The corners and edges are more rounded off than those of the DIL 4 contact. The lateral view of the contact shows that no spikes have formed and that the beads developed only directly along the edges of the contact. The contact wear allowance is therefore fully maintained for the switching operations. The contacts will thus attain the promised service life. These pictures also show clearly the characteristic appearance of contacts working within permissible load limits.

Photographs Nos. 7 and 8
These two photos of DIL 8 contacts show a comparison of contacts from two different contactors used for condenser control.
The upper picture illustrates the surface of the contacts from a contactor used for condenser control, working under making duty only. Here again we observe the typical appearance of a contact surface exclusively under making duty.
The lower picture shows a contact from a contactor used for condenser control, after a switching capacity test, consisting of making as well as breaking operations. The light brown tinge is a sign of breaking duty. The large proportion of light spots with a metallic gleam is explained by the fact that with a condenser contactor the making duty is considerably more severe than the breaking duty. Upon closer scrutiny, a great number of minute welded spots will be observed, spreading over the area where contact making occurred. These, however, were broken up again.
For this reason the photo of a contact after a test of 100 making operations was chosen because the fine welding spots will be covered by subsequent contact blows in prolonged switching duty, as can be seen by comparison with the upper photo.

Photos Nos. 5 and 6

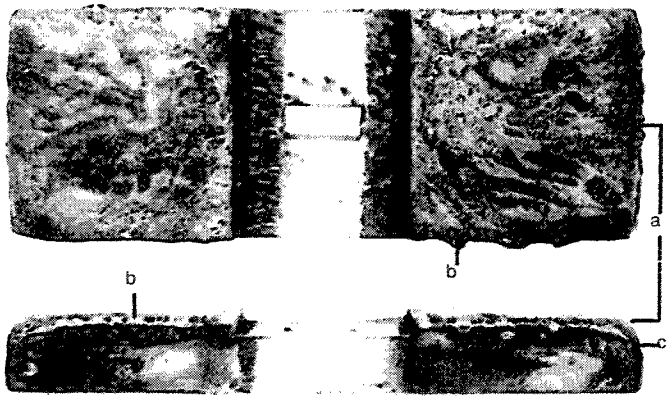

Characteristics:
(*a*) Blue colouring
(*b*) Maintained geometrical shape
(*c*) Only beads, no spikes
(*d*) Only slightly rounded off edges

Photo No. 7
Switching in capacitors

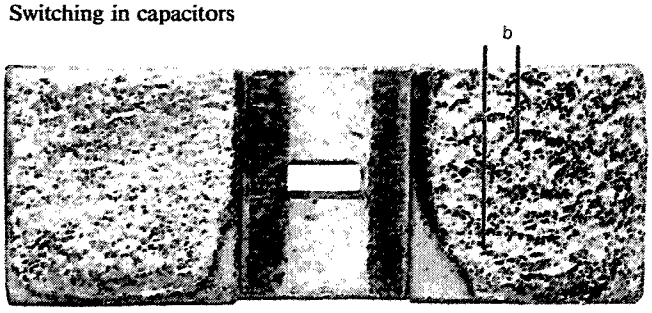

Characteristics:
(*a*) Silvery colouring
(*b*) Precisely chiselled surface

Photo No. 8
Switching in and out of capacitors

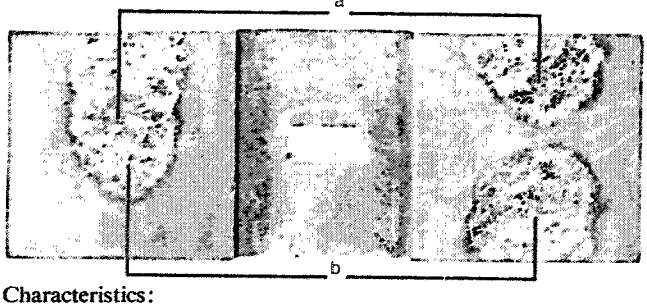

Characteristics:
(*a*) Light brown colouring
(*b*) Torn up welded spots

Second Group: Duty under excessive Load

Common Characteristics: Changed Contours

Photos Nos. 9 and 10
Excessively high breaking current together with unduly high load

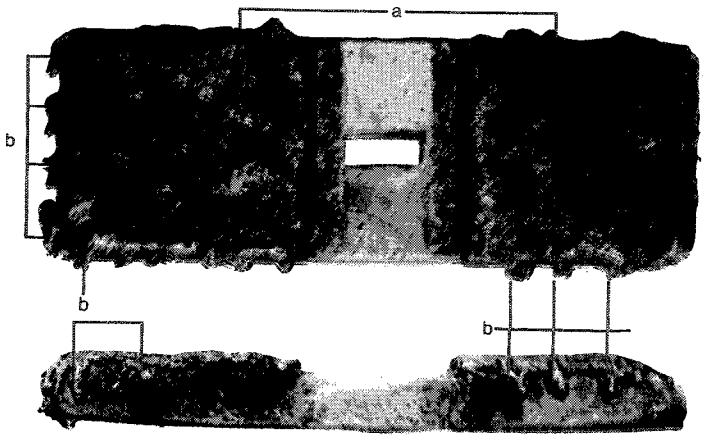

Characteristics:

(*a*) Blue up to dark brown colouring
(*b*) Large silver beads and spikes

Photos Nos. 11 and 12
Exceeded continuous rating together with high frequency of operation

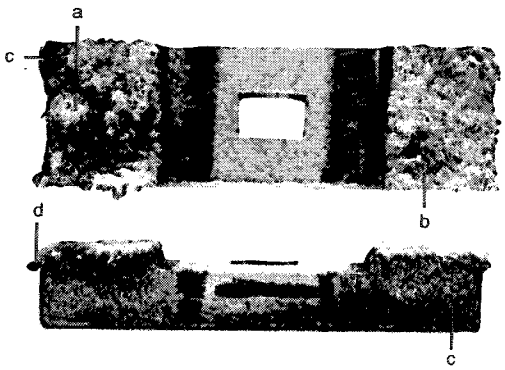

Characteristics:

(*a*) Welded spots
(*b*) Light brown colouring
(*c*) Extended surface
(*d*) Silver beads, no spilkes

Second Group: Service under Overload. Common Characteristic: deformed contours.

Photographs Nos. 9 and 10
Contrary to the photos shown so far, these pictures of contacts of a DIL 8 contactor show marked deformations of the geometrical form. Very large silver beads and spikes have formed on the edges of the contacts which have partly bent downward. The contact surface remained smooth and has the typical blue colouring of breaking duty. No white metallic spots can be found on the contact surface. The contacts were taken from a DIL 8 contactor which was subjected to a heavy test of 160 per cent rated load. The switching capacity of the contactor was not exceeded by this test, so that no immediate disturbances occurred. This excessive load leads, however, to undue wear of the contacts, for the silver material accumulating in the form of beads and spikes can no longer be used for further contact making. This, and the increased burning of the material will considerably decrease the life of the contacts.
This kind of excessive load is, as can be seen, very easily recognized and the specified features of the contact shape are reliable indications that the rated load of the contactor has been exceeded by an unduly high breaking current.

Photographs Nos. 11 and 12
These two photos of a DIL 4 contact show positive indications of excessive thermal stress.
This example shows the effects of exceeding the continuous current rating, bringing about an undue temperature rise at the contact gap. Although the temperature did not rise to the point of fusion, a temperature near softening point was reached. In conjunction with a high frequency of operation, the impact energy of the contacts was strong enough to produce permanent deformation of the contact surface.
The load remained within tolerable limits, which becomes evident by the silver beads formed along the edges and corners of the contacts, but the spikes, the characteristic sign of too high a current, are absent.
Overstress of this nature on the contacts will ultimately produce contact welding.
On the left side of the contact small welded spots are clearly visible as well as the large welded area near the left edge, which finally led to the failure of the contactor.

Photograph No. 13
This contact also shows uneven outlines as well as an irregular surface. The colouring is also unequal, showing positive blue areas alternating with silvery bright spots with a chipped surface.
The deformation of the geometrical shape and the formation of spikes, pits and furrows on the surface suggest an excessive current. The formation of silver beads on the surface as well as the irregular colouring indicate special load conditions.

Second Group: Duty under excessive Load

Common Characteristics: Changed Contours

The contact is, in fact, the result of the same heavy load test applied to the contacts shown in photos Nos. 9 and 10. A condenser was, however, connected in parallel in this instance for individual power compensation. The apparent power decreased correspondingly, the spikes and points are no longer as marked as in photos Nos. 9 and 10. The blue tinge indicative of a severe breaking stress, while the silvery, chipped areas clearly indicate heavy making stresses, customary in condenser control. This contact is a good example of how the nature of the load is clearly reflected in the appearance of the contact surface.
Although the amount of burnt contact material is reduced by connecting the capacitor in parallel, the load on the contact is still unduly high.

Photographs Nos. 14 and 15
These two photos of a DIL 4 contact are again typical of a very specific case. It is obvious at first sight that the controlled current remained within permissible limits, for the edges are free from silver beads and spikes. The surface shows the typical blue colouring (however of a considerably darker hue) indicating breaking duty. The contours have undergone a change of a nature which justifies the conclusion that small silver particles have been continuously transferred to the edge of the contact in a very liquid state, from which they have flowed down. These features develop if the motor power controlled by the contactor remains in the lower half of the permissible current range and, at the same time, the frequency of operations is unduly high.
Although no welding nor excessive temperature rise of the contact surface in produced, the spots where the arc stands for a longer period are severely heated up, if the liquid silver material in this place has not sufficiently cooled down before the formation of the next arc. It may happen that the silver material, pushed by the base of the arc toward the edge of the contact in a liquid state, remains in this state, flowing down the sides. This interpretation is supported by the intensive colouring.
It is obvious that this kind of load will also reduce the contact wear allowance since part of the contact material is transferred to unsuitable places.

Photograph No. 16
This contact of a DIL 4 contactor was taken from a contactor used for making a current for above the rated capacity.
This excessive load will inevitably cause welded contacts and as a consequence immediate failure of the contactor. This example was intentionally chosen to illustrate the characteristic appearance of a genuinely welded area.
In the centre we see the core of liquefied silver, smooth and shining, enclosed by the roughened halo, which is caused partly by the breaking apart of the contact. If the rated value is only slightly exceeded, the welded spot is so small that it can only be observed if considerably magnified.

Photo No. 13
Rated breaking current exceeded. Capacitor connected in parallel.

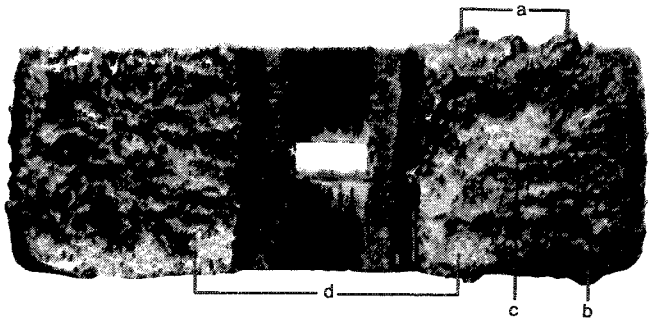

Characteristics:
- (*a*) Large spikes
- (*b*) Blue colouring
- (*c*) Furrows and beads on the surface
- (*d*) Silvery spots

Photos Nos. 14 and 15
Unduly high frequency of operations

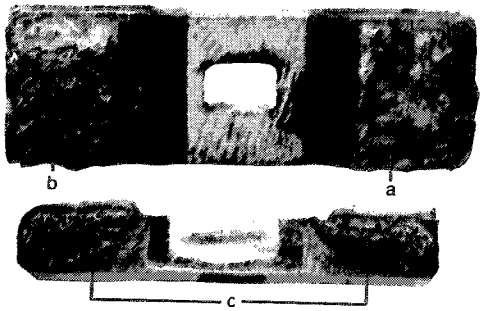

Characteristics:
- (*a*) Deep blue colouring
- (*b*) Smooth surface
- (*c*) Flow of silver material at the edges

Photo No. 16
Excessively high making current

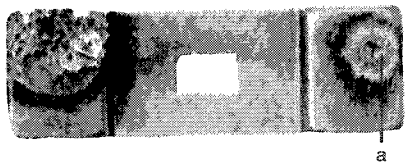

Characteristics:
- (*a*) Welded spot

Third and Fourth Group: Inadmissible Service Conditions

Common Characteristics: Considerably Deformed Contact Surface

Photo No. 17
Inadmissible reversing duty

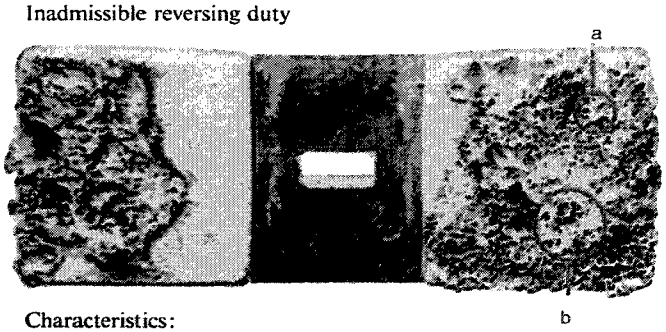

Characteristics:

(*a*) Blue-brown colouring
(*b*) Many welded spots
(*c*) Nor spikes nor prongs

Photos Nos. 18 and 19
Inadmissible Inching (jogging) duty

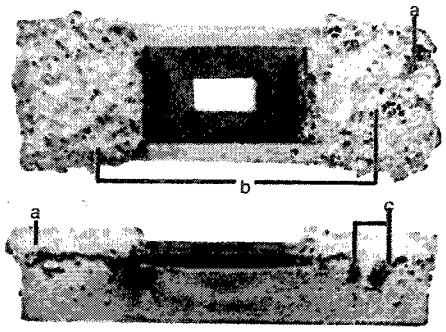

Characteristics:

(*a*) Strongly deformed contact surface
(*b*) Mostly silvery colouring, more rarely brown
(*c*) Spikes and prongs on the edges, in most cases not welded, only sticking contacts

Photo No. 20
Collapsing control voltage in the moment of making

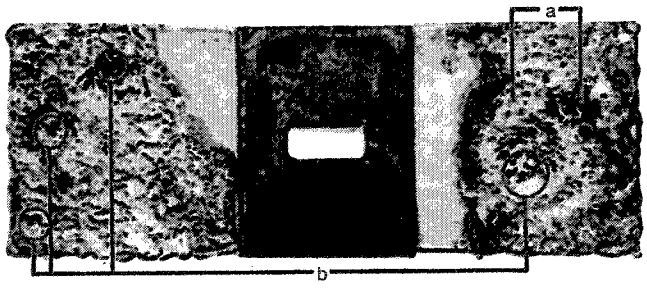

Characteristics:

(*a*) Silvery colouring with dark spots
(*b*) Very extended welded spots with pronounced liquification of silver

Photograph No. 17
This contact of a DIL 8a2 contactor shows the characteristic blue-brown colouring of breaking duty. No spikes have formed, a proof that the breaking current was not too high. Many welded spots can be observed, which are spread over the entire contact face. Although somewhat levelled out by the arcs of subsequent breaking operations they have entirely changed the smooth appearance of the surface under normal conditions. In two spots the silver became liquefied to a greater depth.
This contact shows evidence of the effects of unduly heavy reversing duty. The severe starting load was too heavy and caused the formation of a chipped contact surface by a large number of torn apart welded spots. These conditions continued until full liquefication of the contact surface occurred in two places which almost caused the welding of this contactor.
Contacts which are submitted to repeated short-time failures of the control voltage show the same features.

Photographs Nos. 18 and 19
As opposed to the contacts shown in photo No. 17, these contacts of DIL 4a2 contactor shows strongly developed spikes as well as an entirely white, silvery appearance of the contact surface. The contact surface proper is flattened out by pressure, changing the original form, and is probably more intensely chipped than the surface of the contact shown in picture No. 17.
The formation of points and spikes suggests above all an excessive breaking current which the white silvery appearance of the contact surface seems to contradict. When we take into consideration the exceedingly high temperature over the entire surface, existing during the process of deformation of the contact during which the silver turned viscous, suppressing the thin blue coloured layer, this seeming contradiction is explained.
This contact was taken from a contactor used for inching duty for which it was not designed. The high making and breaking currents — due to the very short intervals customary in inching duty — heated up the contact surface to an excessive degree beyond the fusion temperature of the silver. It is only natural that this fusing of the entire contact surface will inevitably produce sticking contacts.
It must be observed that the contact surface does not show any welded spots, a sign that although the switching capacity of the contactor was not exceeded, the inching duty was beyond the rated performance of the unit.
These extreme service conditions are, unfortunately, very frequent. For this reason the proper evaluation of the signs in order to eliminate the causes of possible faults is of the utmost importance.

Photograph No. 20
This contact shows no spikes and only a very slight brown colouring. The silvery spots, predominant

over the entire surface, are an indication that no excessive breaking stress is involved here, but that the trouble is due to failure of the unit in making. A very extensive welded area has formed on the right half of the contact, indicative of the contactor working with undervoltage.
These marks occur relatively frequently if motors with high output are controlled. In this particular case the control voltage broke down under the effects of the high starting current, producing first a chipped contact surface and finally completely welded contacts.

Photographs Nos. 21 and 22
These contacts also operated under insufficient control voltage. As opposed to the contact shown in Photo No. 20, the control voltage was permanently too low. Thus not only many and extended welded areas were produced, but also excessive heating of the entire contact surface and, consequently, complete deformation.
It might be advisable to underline at this stage that the nature of the colouring of the contact surfaces is essentially influenced by the relation between making and breaking currents and the ratio of undervoltage. All gradations of colouring between photos Nos. 17 and 21 may develop in cases of this kind.
A distinction between the cases of inadmissible inching duty, reversing service and undervoltage is not always easy to make and is only possible after minute examination of these photos.

Photographs Nos. 23 and 24
These photos of two DIL 8 contacts are a particularly clear illustration of the effects of a very high current (short circuit current) which passed through them. It can be observed in photo No. 23 that a large part of the right hand section of the contact surface was heated to a state of slight plasticity. The upper left hand section was liquefied to a state where the dynamic forces of the current succeeded in blowing the silver outwards. The contact material was carried away in this case over the middle of the silver coat. It is therefore discernible that the contactor was in the closed position when the surge current developed and remained thus, for the surface of the crescent shaped shallow crater is smooth and looks polished. Moreover, small welded spots are clearly visible on the left half of the contact. In this case three welded spots can be clearly located.
On the right half of the contact shown in photo No. 24, it may be observed that the surface of the shallow crater is no longer smooth but chipped. These marks develop when the contactor opens a short-circuit current and an arc base moves across the liquefied silver layer. This is produced by the control voltage breaking down under the effects of the short circuit current, so that the contactor drops out.
These marks constitute an absolute proof that the short-circuit current passed through the contactor has reached a multiple of the permissible continuous current rating.

Photos Nos. 21 and 22
Control voltage too low

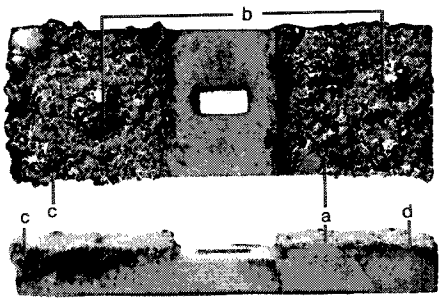

Characteristics:
(*a*) Silvery up to brown colouring
(*b*) Pronounced welded spots
(*c*) Strongly deformed contact surface
(*d*) Silver beads, but no spikes nor prongs

Photo No. 23
Short circuit in closed position

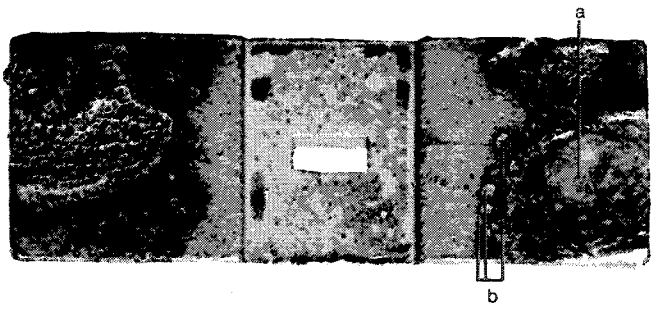

Characteristics:
(*a*) Crescent shaped shallow smooth bright craters
(*b*) Welded spots

Photo No. 24
Short-circuit with interruption

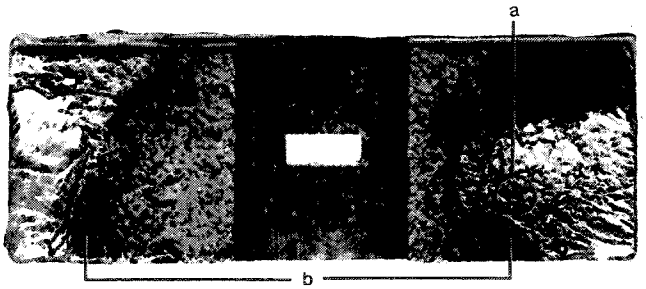

Characteristics:
(*a*) Craters as shown in Photo No. 23, yet grooved
(*b*) Pronounced accumulation of soot

TRANE

Applications Engineering Manual

Control Of Model CVHE CenTraVacs

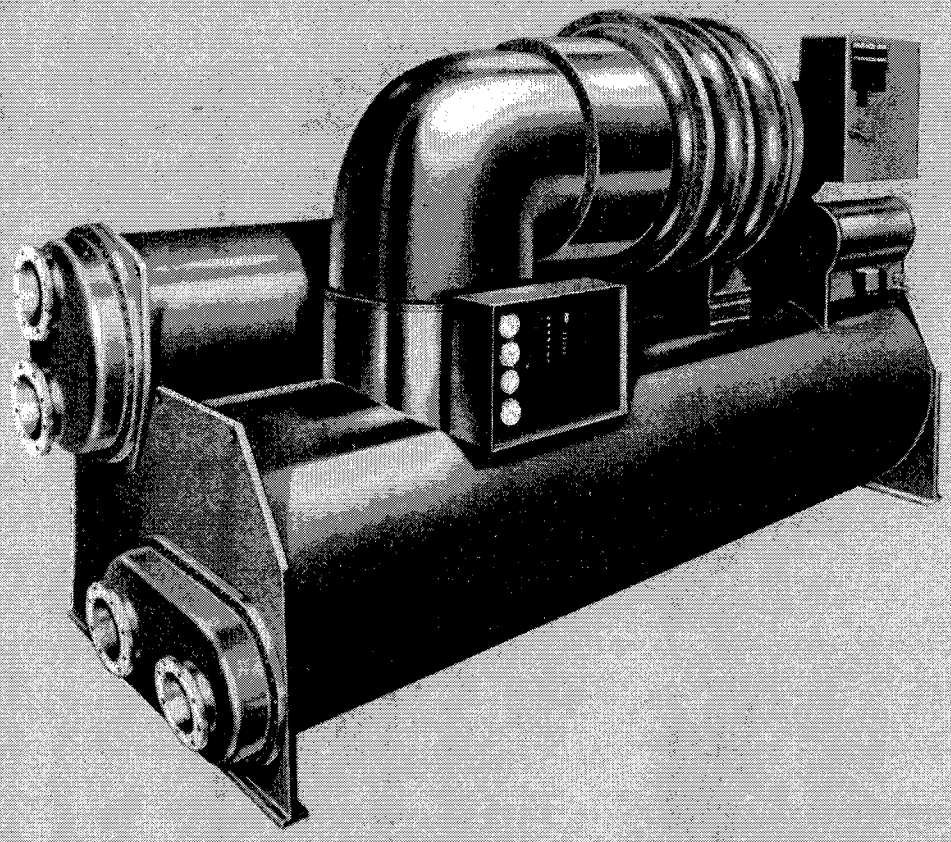

Control Of Model CVHE CenTraVacs

©The Trane Company, 1985

Purpose

This manual describes the control and application of Model CVHE CenTraVacs in single and multiple chiller installations. Overall system descriptions provide the fundamentals. In addition, functions of major control elements are detailed. Primarily, the intent is to provide adequate information to apply Model CVHE CenTraVacs to conventional chilled water systems.

Content

The CenTraVac System 3
Control Panel 4
Sequence of Operation 6
External Panel Wiring 9
Factory-Mounted Starter Panel 11
Motor Overload Protection 12
Distribution System Fault Protector 13
Water Piping and Control 15
Electrical Interlocking 17
Pneumatic Control 17
Multiple Chiller Systems 19

The CenTraVac System

The Model CVHE CenTraVac is a state-of-the-art, water cooled hermetic centrifugal water chiller. Cooling capacities nominally range from 140 to 1250 tons of refrigeration. Three stages of centrifugal compression are used to meet the thermodynamic requirement of a conventional Refrigerant-11 vapor compression cycle. Two economizers (interstage flash cooling chambers) are used to provide maximum thermodynamic cycle efficiency.

The CVHE CenTraVac is driven directly by a hermetic, 2-pole, low slip 3600 rpm AC induction motor. Because R-11 is a low pressure refrigerant, operating pressures are below 15 psig for conventional air conditioning applications.

Chilled water is produced in a shell-and-tube evaporator of the flooded design. Refrigerant evaporates on the outside surface of the tubes, chilling water as it passes through the tubes. Water surfaces (tube internal diameter) can be cleaned mechanically or chemically by accessing the tubes at either end.

All heat is rejected through a shell-and-tube condenser. Like the evaporator, condenser water is circulated internally through the tubes. Therefore, they too may be mechanically or chemically cleaned.

The Model CVHE CenTraVac is a one-piece, completely factory assembled package. Field connections to the machine are made to four elements:

1. Main compressor power
2. Control system interlocking
3. Chilled water piping
4. Condenser water piping

Main compressor power is taken from standard 3 phase, 60 Hz utility grids. Voltages may vary from 200 to 4160, depending on the specific electrical service provided.

Proper application of the CenTraVac requires an understanding of the functions of the complete system and its components.

First, control system interlocking ties capacity control functions and CenTraVac safety devices to the chilled water system.

Chilled water is circulated by one or more pumps through a piping system to air conditioning terminals. Ordinarily, these terminals employ an extended surface heat transfer coil. One of two basic concepts can be used to control the air conditioning effect.

Modulated Flow	Constant Flow
2-way valve	3-way valve

Traditionally, water chillers are rated as constant flow devices. The reasons for this are beyond this brief overview and are discussed in Trane Engineer's Newsletter Vol. 9, No. 1. Some form of interlocking must be provided to prove chilled water flow before the chiller is permitted to operate. Operation of the CenTraVac without adequate chilled water flow has serious consequences and must be avoided.

The CenTraVac control system maintains a constant temperature, chilled water supply. The assumption is that a constant supply water temperature will satisfy the continuous cooling needs of the terminal units. In this way, chiller capacity is matched with the system's demand for cooling.

Condenser water is usually pumped from a cooling water source. Several sources re commonly available:

- Open cooling tower
- Closed circuit cooling tower (evaporative cooler)
- Cooling pond
- River or lake water (with or without heat exchanger)
- City water

Condenser water interlocking is also required. However, the physical consequences of an interrupted supply of condenser water, while important, are not as damaging as the loss of chilled water flow.

Condenser water also requires temperature control. If the water is too warm, the CenTraVac may not be able to meet the cooling load. If it is too cool, other operational problems can occur. This control system is completely separate and usually not interlocked with the CenTraVac itself.

Control Panel



Figure 1

(Figure 1) All safety and operating controls are housed in the CenTraVac control panel. The panel functions are divided into four categories, as indicated by the external panel layout:

1. Pressure indicating gauges have no operating function. They are used only to provide condenser, evaporator, lubricating oil and purge drum pressures.

2. System sequence status lights perform an important diagnostic function. A series of seven lights shows the progress of the CenTraVac starting sequence. As each of the seven circuit interlocks is verified, its individual pilot light comes on. Therefore, the reason for an aborted start can be determined by observing the pilot lights and determining the point at which the sequence was breached.

3. Five fault trip indicators display the status of each safety cutout control. Circuit interrupters are used to open the circuit instead of relays because they will hold their position in the event of power interruption. Therefore, power failure does not require the manual resetting of all safeties. Additional alarm contacts on each of the fault trip indicators are brought to a terminal strip for external connection.

4. The electronic capacity control system consists of three elements:

- Chilled water temperature control
- Demand limiter
- Manual inlet vane control

Chilled Water Temperature Control

The chilled water temperature control module uses a transistorized sensing element to measure the supply water temperature. The controller has an adjustable dead band that spans the plus and minus sides of the setpoint temperature. The dead band adjustments are ±.25, ±.50, ±1.0 and ±1.5 F. Within this dead band no control action is taken.

The control module loads and unloads the chiller using variable duration control pulses. The time lapse between each successive load/unload pulse is adjustable between 10 and 310 seconds. This, coupled with the dead band adjustment, provides the latitude of control sensitivity needed to produce stable system performance over a broad range of application conditions.

Loading...When loading, the control pulse duration is a function of the chilled water temperature deviation from the plus side of the dead band versus the motor current, as a percentage of the "% Current" setting of the demand limiter.

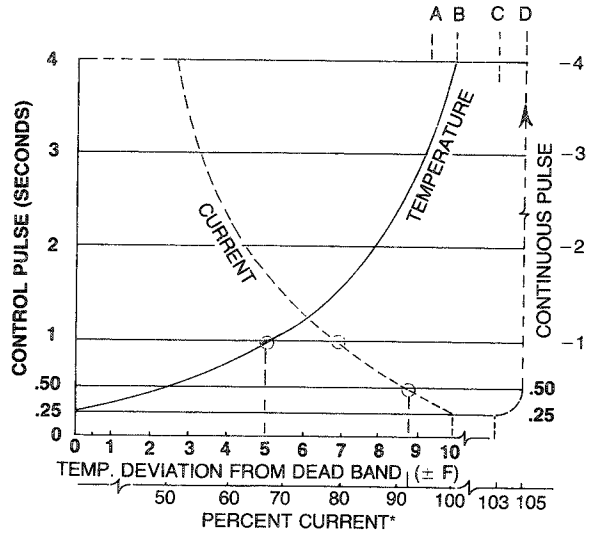

Figure 2

(Figure 2) For example, assume the supply water temperature is 5 F above the plus, or upper, dead band limit and the overload is generating a signal that is proportional to 93 percent of its "% Current" setting.

Since the module recognizes the more critical of the two conditions, instead of the one second, the lesser .5 second load pulse is used. In this example, current limiting takes precedence over temperature control. Had the current been 80 percent, or less, of the "% Current" setting, the temperature related 1 second pulse would have been used. In other words, in this example, to maintain stability, the module selects the lesser of the two pulse signals. Again, the selected 10 to 310 second time lapse is observed between successive load pulses.

Unloading...Unlike loading, the unloading mode is solely a temperature related function. Since chiller unloading provides motor current relief, motor current is not a consideration. Therefore, the unloading pulse duration is a function of the chilled water temperature deviation from the minus side of the dead band.

Demand Limiter

The demand limiter control setting is continuously variable from 40 to 100 percent of the motor full load current. Any particular setting pre-loads the device, as required, to limit the motor current to that value.

Motor current is sensed by three current transformers and is processed into a proportional DC voltage by the CenTraVac electronic overload. This output voltage is monitored by the demand limiter which transforms it into a signal that is related to its "% Current" setting.

As discussed, throughout the temperature controller modulating range, the chilled water temperature deviation from the dead band and the "% Current" signals are compared. And, the "% Current" signal is used to establish the load pulse duration when current limiting becomes the critical condition.

When in the current limiting mode, the load pulse duration is reduced until 100 percent of the demand limiter "% Current" setting is reached (point B). At this point, the control pulse duration drops from .25 seconds to zero—vane movement stops.

At 103 percent of the load limiter setting (point C), an unload sequence is initiated. This sequence consists of .25 second unloading pulses, each followed by the 10 to 310 second null period. This sequence is repeated in an attempt to return the chiller to 100 percent of the "% Current" setting.

Finally, should the current exceed 105 percent of its setting (point D), a continuous unloading pulse is established. This pulse is terminated when the motor current is reduced to 95 percent of the limiter setting (point A). At this point, the chiller is free to again accept load.

Manual Inlet Vane Control

A four-position switch provides manual override of the automatic capacity control system. In addition to "automatic" control, the inlet vanes can be made to "load", "hold" or "unload". This permits the operator to check vane motor and linkage operation.

Note: While the chilled water temperature control system is overridden, the demand limiter and low refrigerant temperature systems remain in control to limit vane travel.

Sequence Of Operation

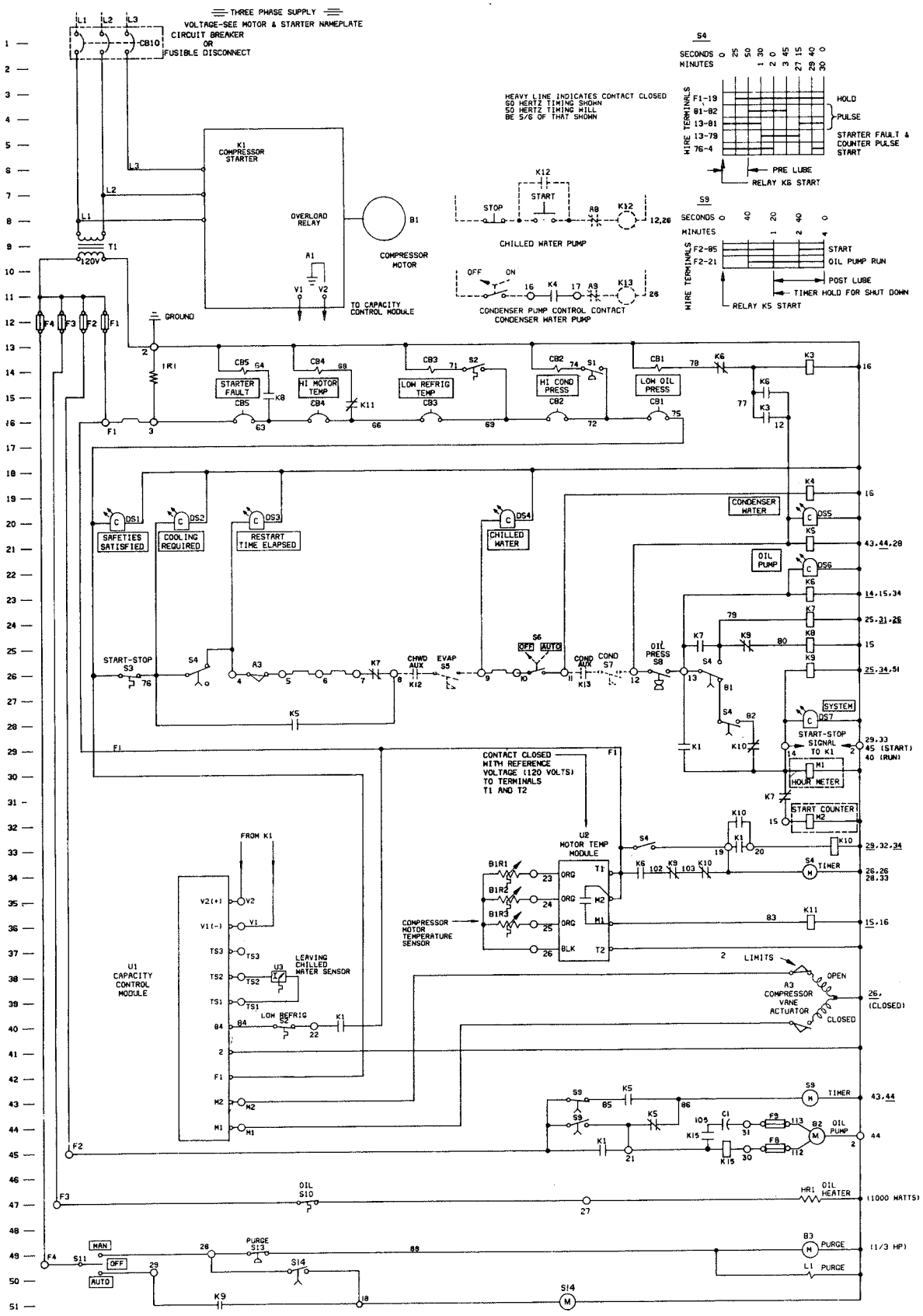

Figure 3

(Figure 3) The sequence of operation can be described using this schematic line diagram.

A start is initiated by performing three manual operations:

1. Energize the chilled water pump starter, K12 (line 8).
2. Close the main circuit breaker, CB10 (1).

Immediately, the motor temperature module, U2 (34), closes its contacts, energizing relay K11 (36). In turn, the K11 contacts (15) open, preventing circuit interrupter CB4 (16), "Hi Motor Temp.", from opening.

Note: The action of the circuit interrupters is delayed approximately 1 second. This avoids nuisance trip-out at initial start-up, when the relay logic needed to arm the interrupters is being established.

3. Set the "Off-Auto." switch, S6 (26), to "Auto.".

Once these procedures have been performed, control power is conducted through the safety control interrupter contacts (16). If all interrupter contacts are closed, Pilot light DS1 (20), "Safeties Satisfied", will light and power will be fed to the F1 terminal of the capacity control module, U1 (42). This drives the vane actuator, A3 (39), to the closed position.

Next, when the return water temperature indicates that a load exists, the cooling demand switch, S3 (26), closes. This lights DS2 (20), "Cooling Required", and conducts control power to timer contact S4 (26). Provided 30 minutes have elapsed since the previous start, S4 is closed, lighting DS3 (20), "Restart Time Elapsed".

Assuming the compressor is not running and its inlet vanes have been driven to the closed position, the inlet vane actuator end switch, A3 (26), is closed. This conducts control power through the normally closed contacts of K7 (26) to the auxiliary contacts, "CHWD AUX." (26), of the chilled water pump starter, K12 (8). Once the starter is engaged and chilled water flow is established, the contacts and the flow sensor, S5 (26) close, lighting DS4 (20), "Chilled Water". Proceeding through switch S6 (26), relay K4 (19) is energized. The normally open contacts of K4 (11) close, energizing the condenser water pump starter, K13. This closes both the starter auxiliary contacts, "COND. AUX." (26), and, once flow is established, the flow sensor S7 (26). In turn, pilot light DS5 (20), "Condenser Water", lights and relay K5 (21) is energized. Contacts K5 (43 and 44) reverse positions, energizing the oil pump timer, S9. Approximately 40 seconds later, the S9 contacts (44) close, energizing the oil pump motor, B2, through a current sensing relay, K15. Relay K15, in turn, closes, placing the start capacitor, C1, into the circuit. Once the motor assumes running load current, K15 drops-out, de-energizing C1. Another set of K5 contacts (28) close to maintain the control circuit by forming a parallel path with the start inhibitor functions.

When oil pressure is established, oil pressure switch S8 (26) closes, lighting DS6 (22), "Oil Pump", and energizing relay K6 (23). Contacts K6 (14, 15) reverse positions, energizing relay K3 (14). In turn, the K3 contacts (16) close, arming the low oil pressure circuit interrupter, CB1 (14). A third K6 contact (34) closes, energizing timer motor S4 (34). Twenty-five seconds later, contacts S4 (33) close, keeping the S4 timer motor energized throughout its timing cycle. After another 25 seconds have elapsed, S4 contacts (28) close, lighting DS7 (28), "System", and energizing compressor motor starter K1 (29). The closing of the K1 contacts (29) holds power on the motor starter. A second set of K1 contacts (33) energizes relay K10 (33).

One set of K10 contacts (32) closes forming a holding circuit for relay K10. A second set (29) opens, removing the start signal from the K1 starter circuit. Consequently, the start pulse lasts only long enough to energize the starter. A third K1 contact (45) maintains power to the oil pump motor as long as the main compressor starter remains energized.

When the compressor motor starter reaches the "run" configuration, the K1 interlock (40) feeds control power to terminal 84 of the capacity control module, U1 (40), through the low refrigerant temperature switch, S2. Once energized, U1 transmits variable duration load/unload pulses to the inlet vane actuator, A3 (39). As discussed, the pulse duration is established by processing the signals from the chilled water temperature sensor, U3 (38) and the demand limiter, which is an integral part of U1. Since U1 is not powered until the compressor comes to speed, the chiller starts unloaded.

Note that relay S2, "Low Refrig. Temp.", has normally closed (40) and normally open (14) contacts. In the event a low refrigerant temperature develops, contacts S2 (40) open, causing U1 (38) to transmit a constant "unload" signal to the compressor vane actuator, A3 (39). If an additional temperature drop equal to the differential of S2 occurs, contacts S2 (14) close, tripping circuit interrupter CB3 (16), "Low Refrig. Temp.".

The arming of the "Starter Fault" circuit interrupter is initiated when relay K9 (26) is energized, opening its contacts (25). The arming is completed 40 seconds after the initial pulse is sent K1, when timer contact S4 (26) switches from 13-81 to 13-79, energizing relay K7 (24). In turn, the K7 contacts (25) close, locking relay K7 into the circuit. With this circuit arrangement, if some fault causes K1 to open, relay K9 (26) de-energizes, closing contacts K9 (25). This energizes relay K8 (25), closing contacts K8 (15), opening the "Starter Fault" circuit interrupter, CB5 (16).

Sequence Of Operation

When the CenTraVac is stopped normally by the cooling demand switch, S3 (26), or abnormally by a safety trip-out, the relays (K1 and K5) within the oil pump control circuit de-energize. To provide bearing oil pressure during compressor coast-down, a contact of timer S9 (44) remains closed for 2 minutes 40 seconds to operate both the oil pump and timer motors.

Loss of oil pressure while the compressor is running causes the oil pressure switch, S8 (26), to open. This interrupts control power at terminal 13, de-energizing the compressor and, in particular, relay K6 (23). With K6 de-energized, power feeds from terminal 12 (26) through contacts K3 (16) and the normally closed K6 contacts (14) to trip circuit interrupter CB1, "Low Oil Pressure", de-energizing the control circuit.

Finally, the purge unit may be operated continuously by placing the "Man.-Off-Auto." switch, S11 (49) in the "Man." position. When placed in the "Auto" position, purge operation is cycled by timer contacts S14 (50) as long as the compressor is operating and relay contacts K9 (51) remain closed. The timer, S14 (51), is adjustable from 0 to 60 minutes. The typical adjustment produces 5 minutes of purging per hour of unit operation.

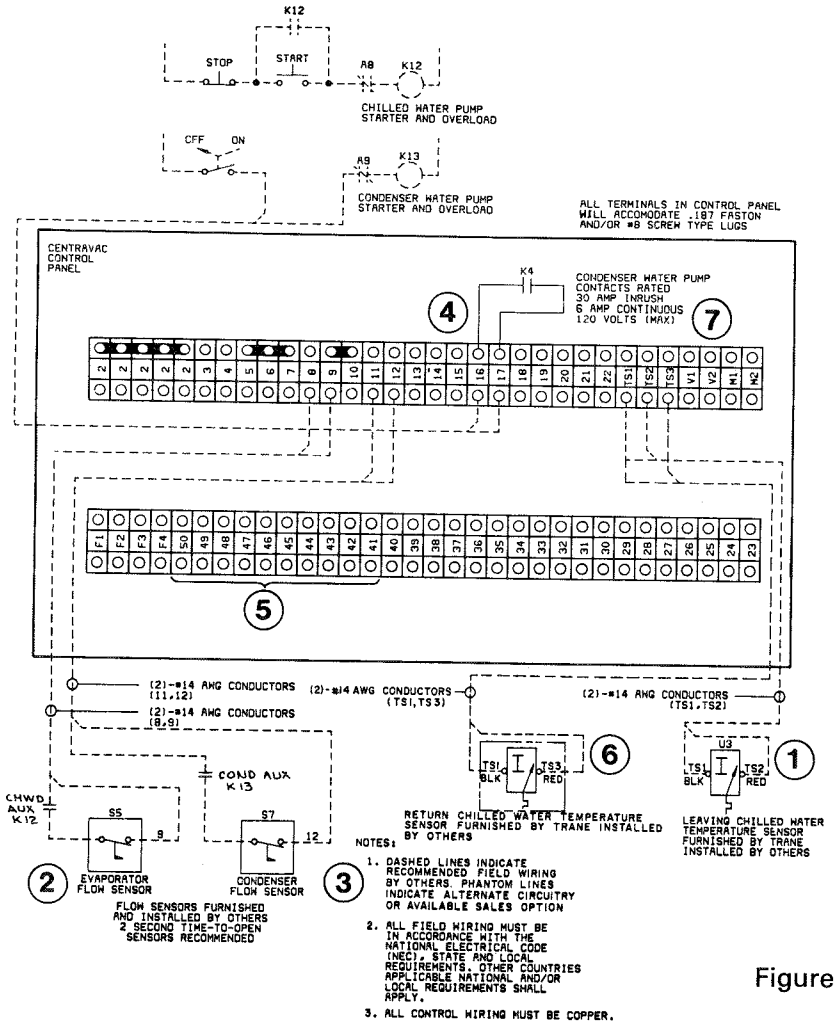

MIN. WIRE SIZE COPPER 75°C	WIRE SELECTION TABLE (REF. NEC 1981) RATED LOAD CURRENT (NAMEPLATE) SUPPLY LEADS OR MOTOR LEADS FOR ACROSS-THE-LINE OR AUTO-TRANS STARTER			MOTOR LEADS FOR STAR DELTA STARTER	
	1 CONDUIT 3 WIRES	2 CONDUITS 3 WIRES EA	1 CONDUIT 6 WIRES	2 CONDUITS 3 WIRES EA	1 CONDUIT 6 WIRES
8	40	80	64.0	69.2	55.4
6	52	104	83.2	90.0	72.0
4	68	136	108.8	117.6	94.1
3	80	160	128.0	138.4	110.7
2	92	180	147.2	159.2	127.3
1	104	208	166.4	179.9	143.9
0	120	240	192.0	207.6	166.1
00	140	280	224.0	242.2	193.8
000	160	320	256.0	276.8	221.4
0000	184	368	294.4	318.3	254.7
250	204	408	326.4	352.9	282.3
300	228	456	364.8	394.4	315.6
350	248	496	396.8	429.0	343.2
400	268	536	428.8	463.6	370.9
500	304	608	486.4	525.9	420.7
600	336	672	537.6	581.3	465.0

Figure 4

(Figure 4) The wiring and corresponding terminal points used to interconnect the panel with the various external control functions are:

1. Chilled water temperature sensor...Terminals TS1 and TS2 accept wiring from the chilled water temperature sensor (U3), located in the supply water piping.

2. Evaporator flow sensor (S5)...Terminals 8 and 9.

3. Condenser flow sensor (S7)...Terminals 11 and 12.

4. Condenser water pump relay (K4)...Wiring from relay K4 exits at terminals 16 and 17. In addition, terminal points are provided for optional connections:

5. External alarm...Terminals 41 through 50 can be used as N.O. or N.C. contacts for connection to external alarms.

6. Return chilled water temperature sensor...-Terminals TS1 and TS3 accept input from this sensor. In turn, the capacity control module (U1) processes the signal to provide chilled water temperature reset.

7. Remote demand limiter control...Terminals V1 and V2 (connected to the electronic overload relay A1) will accept additional input from a 0 to 8.25 VDC source. This additional signal can be used to provide separate demand limiting capability.

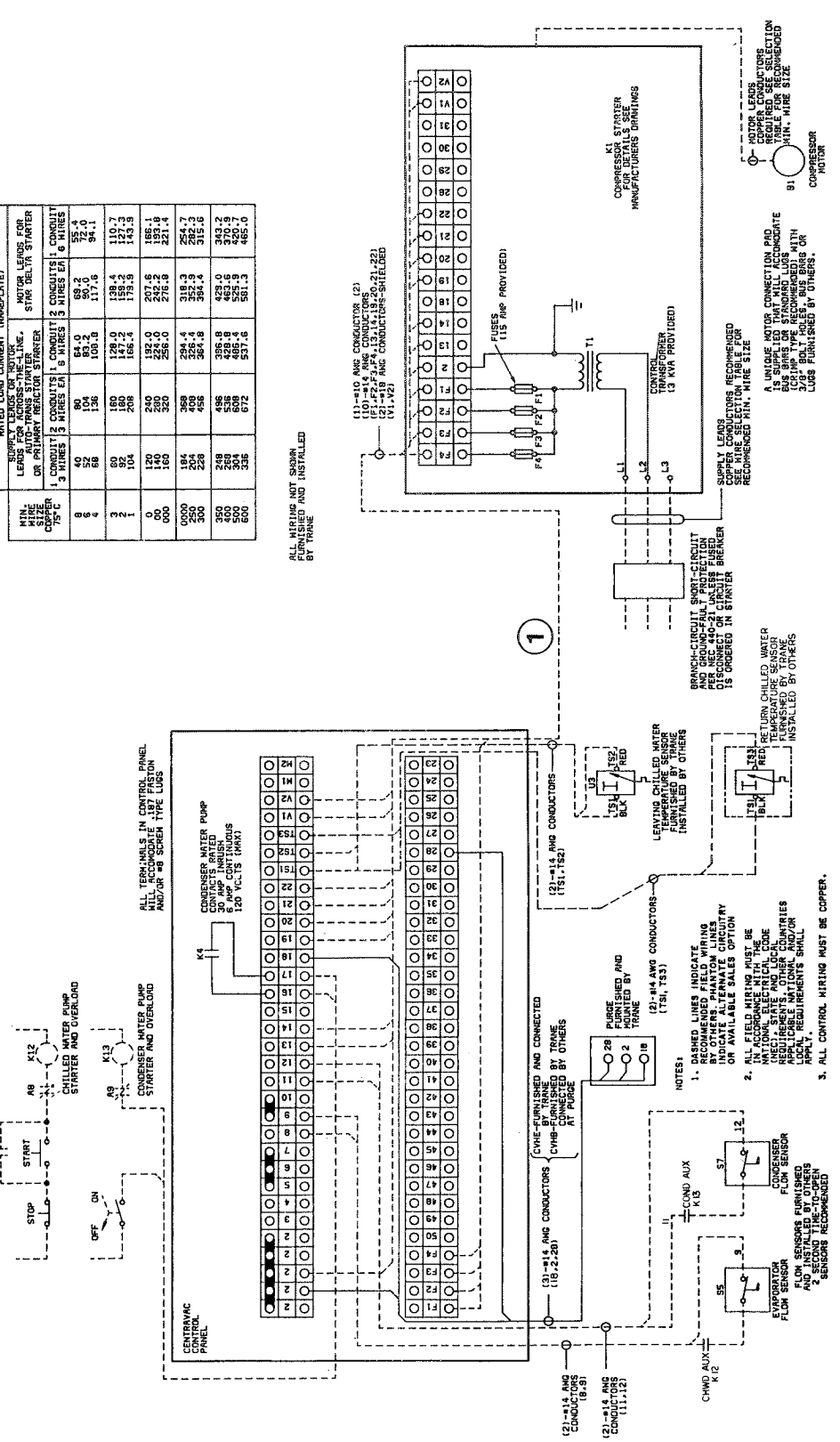

MIN. WIRE SIZE COPPER 75°C	1 CONDUIT 3 WIRES	2 CONDUITS 3 WIRES EA	1 CONDUIT 6 WIRES	2 CONDUITS 3 WIRES EA	1 CONDUIT 6 WIRES
8	40	80	64.0	89.2	55.4
6	52	104	83.2	97.0	72.0
4	68	136	108.8	117.6	94.1
3	80	160	129.0	139.4	110.7
2	92	184	147.2	158.2	127.3
1	104	208	166.4	179.9	143.3
0	120	240	192.0	207.6	165.1
00	140	280	224.0	242.8	193.8
000	160	320	256.0	276.8	221.4
0000	184	368	294.4	318.3	254.7
250	204	408	326.4	352.9	282.3
300	228	456	364.8	394.4	315.6
350	248	496	396.8	429.0	343.2
400	268	536	428.8	463.6	370.9
500	304	608	486.4	526.3	421.0
600	336	672	537.6	581.3	465.0

Figure 5

(Figure 5) In addition to the required and optional wiring discussed and illustrated in Figure 4, the wiring needed to interconnect the panel with a remotely mounted starter is:

1. Starter (K1)...Thirteen wires interconnecting the motor starter and panel.

Fused control power, start-stop relay signals and starter interlocks use eleven wires. The remaining two, connecting V1 and V2, conduct a VDC signal from the overload relay (A1) to the load limiting function of the capacity control module (U1).

Factory-Mounted Starter Panel

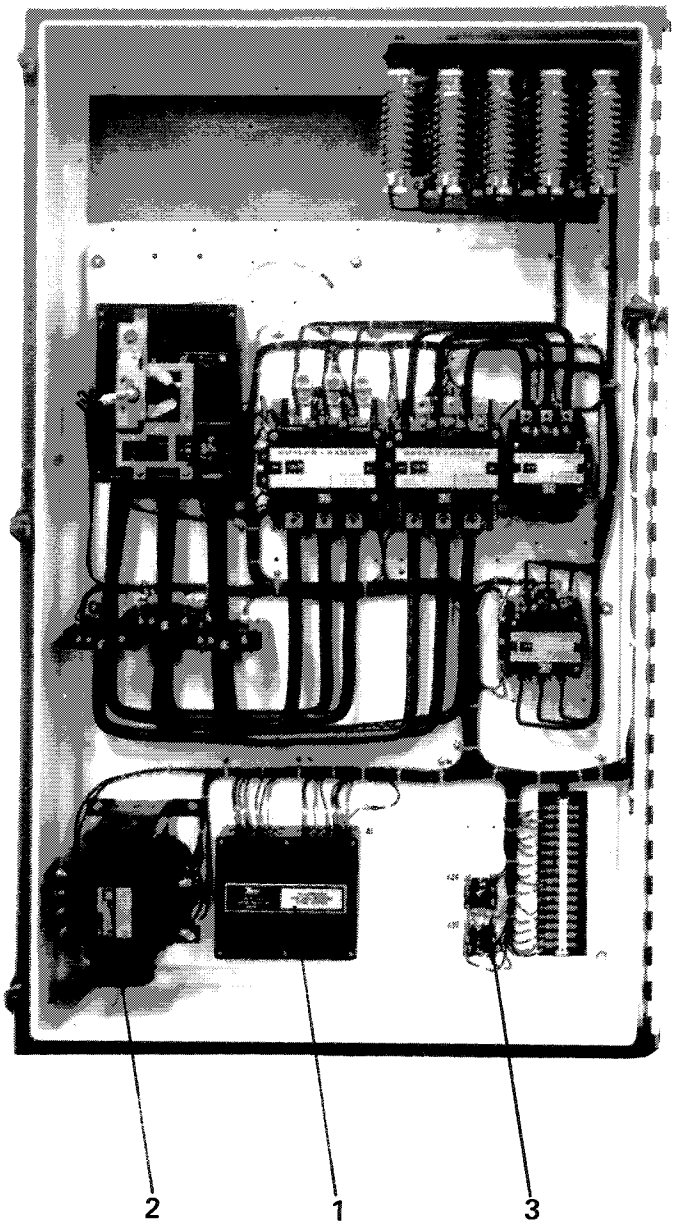

Figure 6

(Figure 6) As a standard option, factory-mounted starter panels are available for all low voltage (200 to 575 volts) Model CVHE CenTraVacs. They contain conventional star-delta, closed transition starters. Factory mounting eliminates field placement of the starter plus all wiring interconnecting the panel and starter and the starter and the CenTraVac.

The starter panels have these advanced features:

1. Solid state electronic overload relay and distribution fault protector.

2. 3 KVA control power transformer.

3. Two (redundant) pilot relays, plus run and start interlocks and a low loss, non-threaded motor connection system.

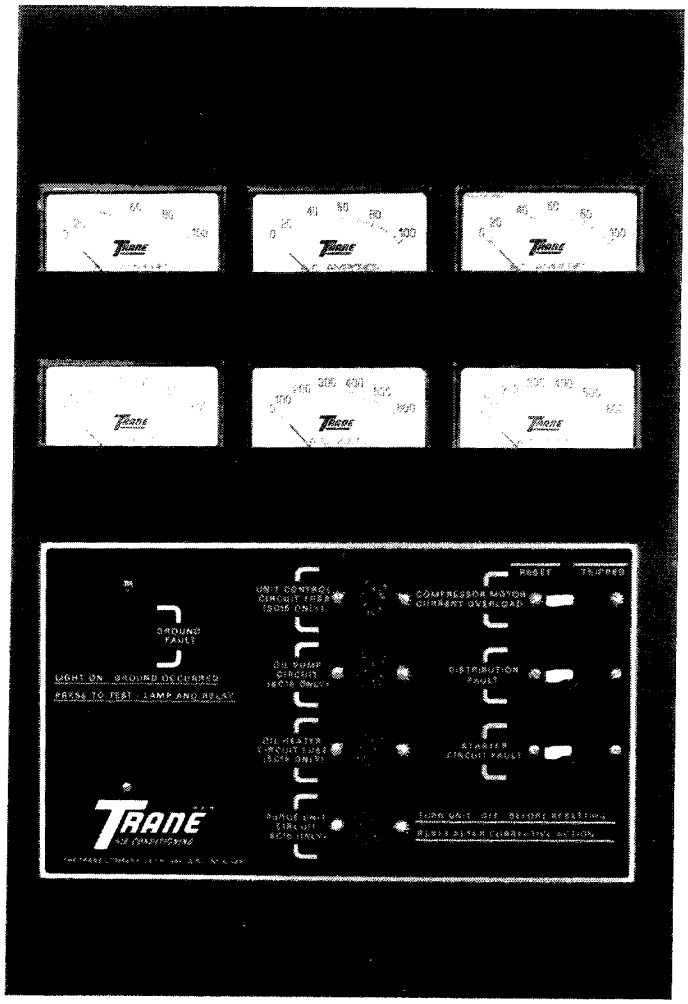

Figure 7

(Figure 7) In addition, the occurrence of a starter fault, overload or distribution fault is displayed by fault trip indicators located in the panel door. Optionally, a ground fault indicator and voltage and amperage meters, for each of the phases, are available.

The CenTraVac motor is started in the star, or wye, configuration and accelerates to the normal operating speed (3575 ± 0.7 percent). Starting current is monitored by the electronic overload module (A1) and, as soon as the current falls to approximately 85 percent of motor RLA, transition to full voltage (delta) is initiated.

When transition is complete, motor current is monitored against a value of 107 percent of RLA. If the current should reach this value, the overload will trip, disconnecting the motor.

Motor Overload Protection

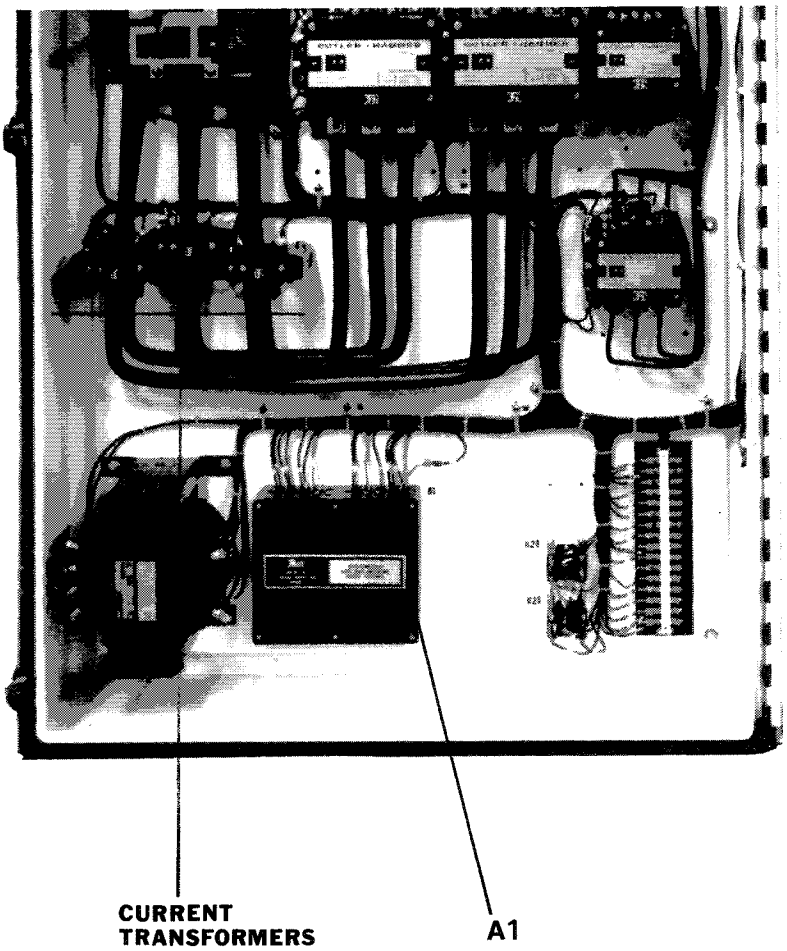

Figure 8

(Figure 8) Three-phase current is monitored by three polarized current transformers located in the primary motor power feeders. The outputs of these current transformers allow the electronic overload A1 to perform its functions. Further, the outputs are used to signal the load limiting function of the capacity control module U1.

The degree of protection afforded by the solid state electronic overload is significantly better than any electro-mechanical device available. The motor is protected throughout its starting and running cycles. Should the current fall outside specific bounds, electronic circuitry will trip the motor starter instantly.

The overload will stop the compressor if any of a variety of system abberations (low voltage, phase failure, phase unbalance or phase reversal) cause high motor current. If specific lockouts are required to cope with these problems, starters may be fitted with such standard options as low voltage protectors and phase failure — phase reversal relays.

Complete description of the CenTraVac motor overload system appears in Installation, Operation and Maintenance MPCA-IOM-1.

Distribution System Fault Protector

Modern electrical distribution systems employ state-of-the-art circuit switching equipment. This allows the utility to supply "uninterrupted" power to its customers during electrical storms and periods of high circuit usage. A definition of "uninterrupted", however, reveals a potential problem. The utility overlooks short duration interruptions. Certain types of loads are adversely affected by short duration power interruptions.

Obviously, electronic loads such as computers and medical monitoring equipment can be severely affected. In addition, high inertia centrifugal equipment can experience trauma when subjected to short duration power interruptions.

The mechanics of this problem are based on the fact that an induction motor, rotating near its synchronous speed, generates a "back e.m.f." that is nearly as large as the driving voltage. When the driving voltage is removed, the back e.m.f. remains, allowing control circuits to remain active for about 60 cycles (1 second).

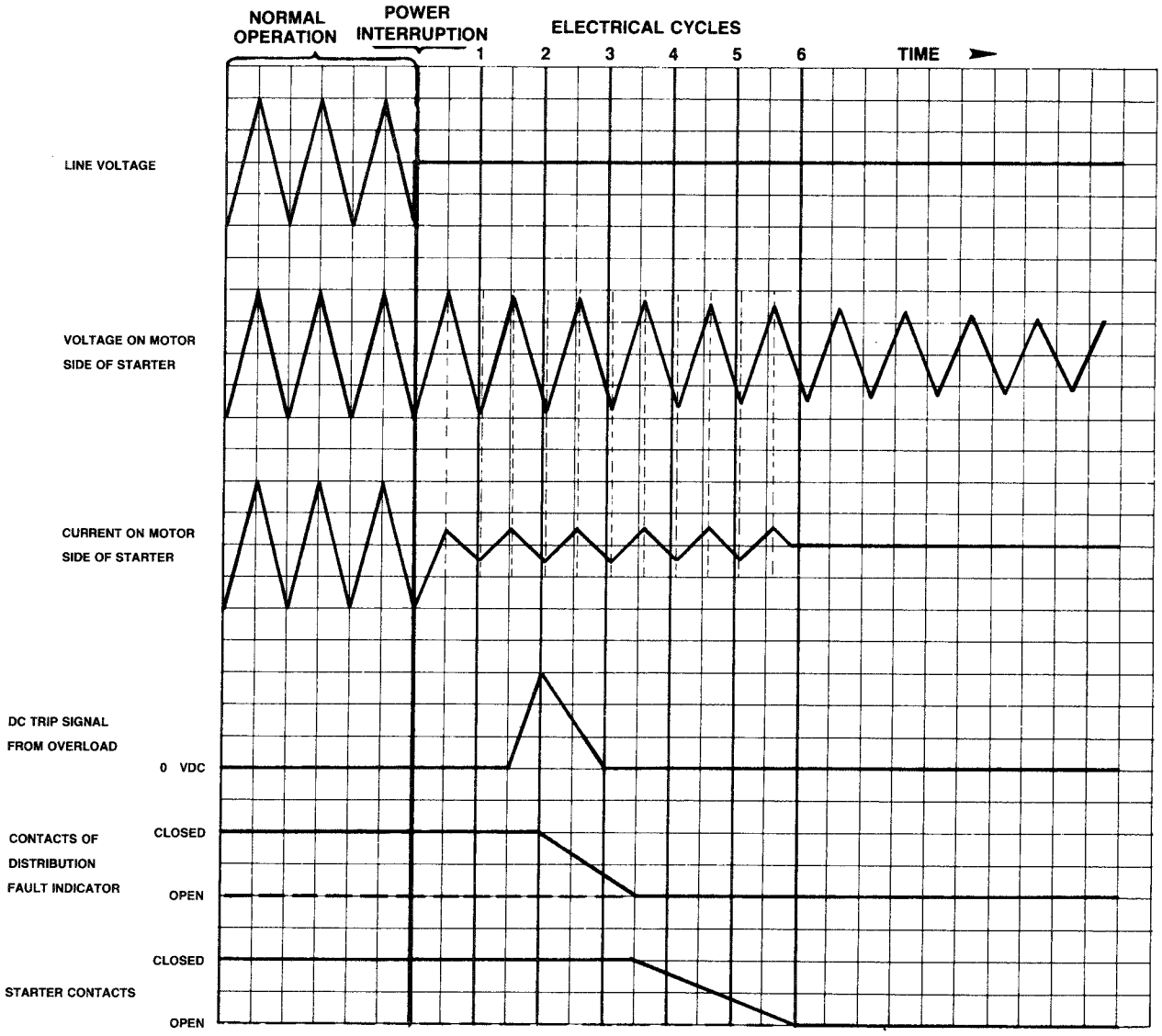

Figure 9

(Figure 9) The frequency of the remaining back e.m.f. follows the decelerating motor, as shown in this brush recording. Therefore, when utility voltage is restored, the motor and power frequencies are "out of synch". The result is extremely high mechanical torques attempting to put the motor and compressor back into synchronization.

Distribution System Fault Protector

(Figure 10) These high torques are potentially damaging to motor windings, shafts, bearings and, as shown, compressor keyways and impellers can also be severely damaged. Therefore, high torque conditions must be avoided at all cost.

The CenTraVac distribution system fault protector can detect short duration interruptions and take the motor off the line within six electrical cycles (1/10 second). It accomplishes this by sensing motor current decline (instead of voltage loss). When motor current decreases to a value less than 20 percent RLA and the starter (K1) contacts remain closed, this module sends a signal to the starter to disengage immediately.

A power interruption of 2 cycles duration (1/30 second) initiates a starter trip with the starter becoming fully disengaged at approximately 6 cycles (1/10 second).

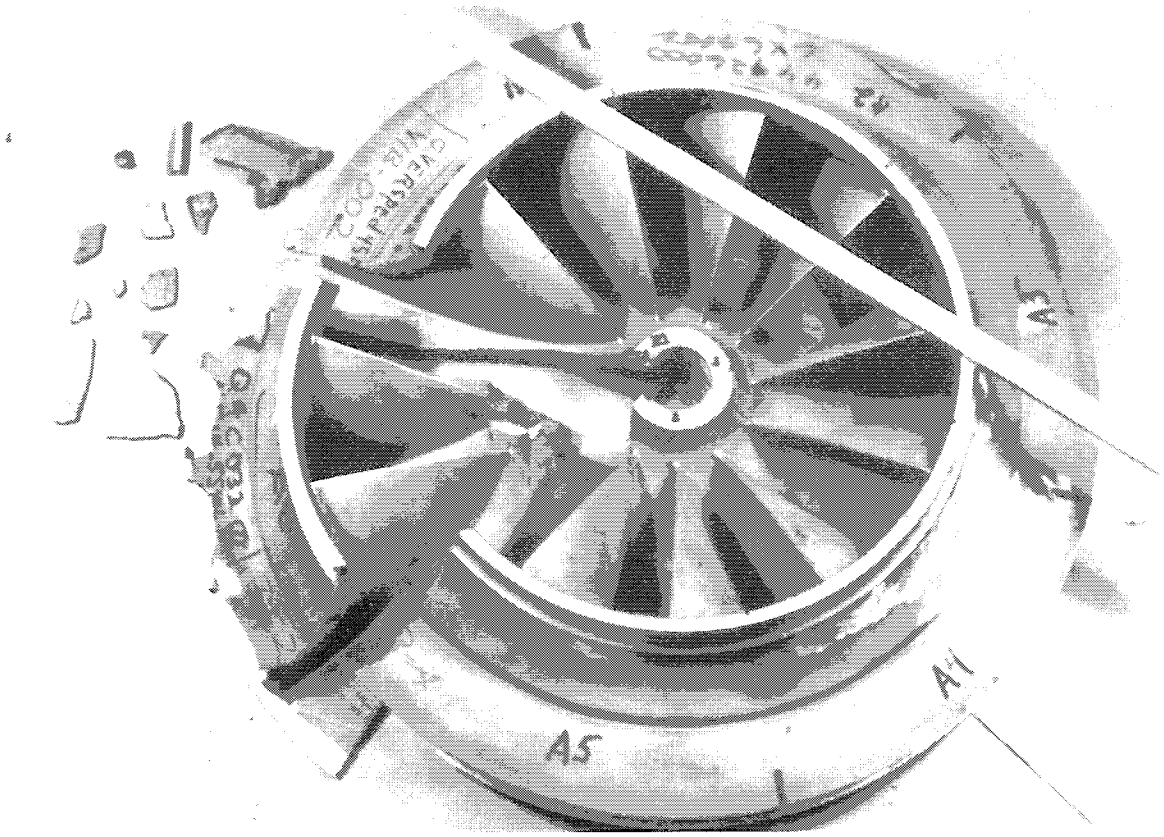

Figure 10

Water Piping And Control

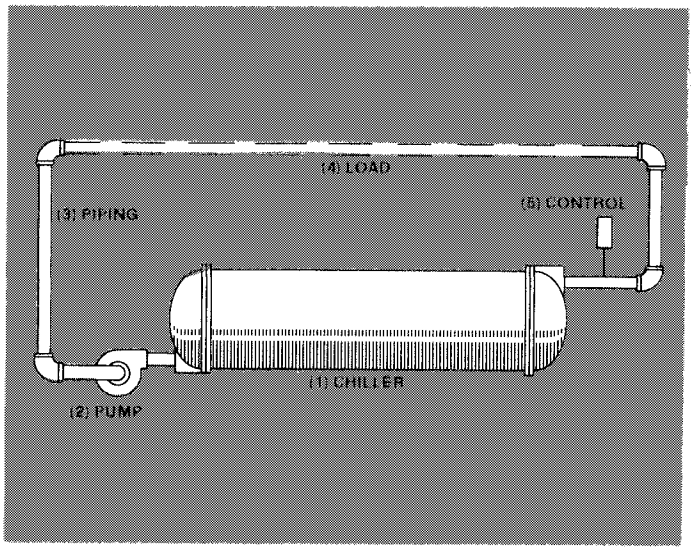

Figure 11

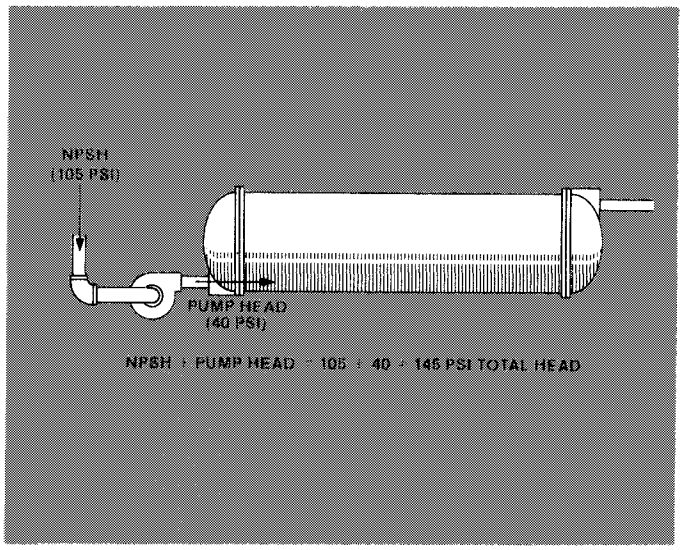

Figure 12

(Figure 11) The basic closed loop chilled water system consists of five elements:

1. Chiller
2. Pump
3. Piping
4. Load
5. Control

Pump location...Should the chilled water pump "pull" or "push" through the chiller? The answer lies in the system's ability to deliver an adequate net positive suction head (NPSH) to the pump. Therefore, in general, pumps are placed upstream of chillers. Exceptions to this generalization occur when the NPSH of a system is very high. This causes the dynamic pressure in the chiller itself to be even higher. And, it may force chiller construction into a higher cost pressure range.

(Figure 12) For example, a system may develop a pump NPSH of 105 psi (243 ft. of water). The pump might be sized to produce 40 psi (92 ft.). The total is 5 psi below the chiller rating of 150 psi. However, the "zero flow" pressure capability of the pump can be well over 45 psi, pushing the pressure at the chiller beyond its rating. In this circumstance, the pump would be better placed downstream from the chiller.

Chilled water flow range...(Figure 13) By changing evaporator pass arrangements, a wide range of chilled water flow rates can be accommodated. Catalog DS-CTV1 shows the various pass arrangements that are available. Two generalizations can be made:

1. Higher flow rates require lower numbers of evaporator passes.

2. CenTraVac capacity increases with higher numbers of evaporator passes.

Therefore, it can be said that high system temperature rise (low flow rate) generally promotes increased chiller efficiency and capacity when the number of passes is optimized.

Flow variations...Once a system flow rate is established, it is usually not changed. While variable flow is sometimes a desirable concept from an energy standpoint, it presents several operating difficulties. First, flow variations can fall

Evaporator Flow Limits and Connection Sizes

UNIT COMPRESSOR DESIGNATION	EVAPORATOR BUNDLE SIZE DESIGNATOR	ONE PASS			TWO PASS			THREE PASS			CONNECTION[1] ARRANGEMENTS
		MINIMUM GPM	MAXIMUM GPM	CONNECTION SIZE(IN)	MINIMUM GPM	MAXIMUM GPM	CONNECTION SIZE (IN)	MINIMUM GPM	MAXIMUM GPM	CONNECTION SIZE (IN)	
CVHE 013-020	1	582	1,280	6	175	640	5	116	427	4	A, B, C, D, J, K, L, M, N, P, Y, Z, 1, 3
	2	525	1,156	6	158	578	5	105	385	4	
	3	465	1,022	6	139	511	5	93	341	4	
	4	398	877	6	120	439	5	80	292	4	
	5	362	795	6	108	397	5	72	265	4	
CVHE 022-032	1	915	2,013	8	274	1,006	6	183	671	5	A, B, C, D, J, K, L, M, N, P, Y, Z, 1, 3
	2	817	1,796	8	245	898	6	163	599	5	
	3	722	1,589	8	217	795	6	144	530	5	
		[illegible]	1,435	8	196	717	6	130	478	5	
				8	175	640	6	116	427	5	
							8	290	1,063	6	

Figure 13

outside the allowable tube flow ranges (DS-CTV1). Second, flow variations appear to the control system as a change in "system size". Consequently, the control system must be able to cope with "system size" changes without manual attention. Few existing chiller control systems have this capability. Application of chillers to variable flow systems should be done only with great care.

Control...The Model CVHE CenTraVac chilled water temperature control system is based on the concept of providing a constant supply water temperature. However, the system embodies sufficient flexibility to allow a variety of control strategies.

The basic system is described on page 5. It is a proportional control system in the sense that the inlet vane actuator movement rate is changed depending on the amount of temperature offset (error). The system also employs floating point control. Corrective action is taken whenever the actual temperature varies from the setpoint. Consequently, the CenTraVac control system is a hybrid system that employs the best features of proportional and floating point control. Additional features are optionally available.

Remote reset of chilled water temperature...The addition of a separate remote manual resetting control accomplishes remotely the same thing that can be done at the panel by adjusting the chilled water temperature setpoint control.

Automatic reset of chilled water temperature...Some control strategies call for higher supply chilled water temperature at reduced system load. Generally, reduced system load is evidenced by a decreasing return water temperature. A separate sensor is placed in the return water stream and its output is plugged into terminals TS1 and TS3 of the control panel. The "command module" uses this input to automatically reset the setpoint. The reset "authority" can be adjusted between zero and 2.0 degrees per degree.

Remote demand limiting...Energy management systems are used commonly to shed electrical loads during times of high demand. CenTraVac systems should never by cycled in response to energy managers. Duty cycling is not useful in controlling large motors such as those used in large centrifugal chillers. Instead, it is possible to shed electrical load by injecting a DC voltage in series with the signal between the electronic overload and the command module.

Application of alternative controls...The basic CVHE CenTraVac control system and hardware are fixed. Alternative devices to perform similar functions cannot be used to replace individual components in the CenTraVac control system.

Modifications to the temperature control system can only be made outside the physical property boundaries of the CenTraVac.

Condenser water...Several suitable condenser water supplies are potentially available. The most common heat sink is an open circuit cooling tower. Heat is rejected to the atmosphere by evaporating a portion of the circulating condenser water. About 1000 Btu's are rejected for each pound of water that is evaporated. Consequently, contaminants are concentrated as more and more water is evaporated.

Cooling towers require chemical treatment, maintenance and control. Temperature control is usually based on fan control, water bypass, or both. The basic concept of tower water control is to maintain a minimum temperature to the CenTraVac condenser. If the temperature is too high, the CenTraVac may not be able to meet the cooling load. Or, it may cause unnecessarily high power consumption. If the temperature is too low, the CenTraVac may not be able to maintain enough pressure differential between the evaporator and condenser to keep all lubrication and refrigerant flow systems functioning properly.

Other heat sinks may be used. "Once through" systems can use water from lakes, rivers or wells. Sea water can be used when it is separated from condenser water by a heat exchanger. Since the temperature of these "infinite heat sinks" cannot be controlled, the flow is controlled. The simplest way to execute condenser pressure control is to use a proportional pressure controller to regulate a simple V-port (linear action) condenser water valve. A typical arrangement is shown in Figure 14.

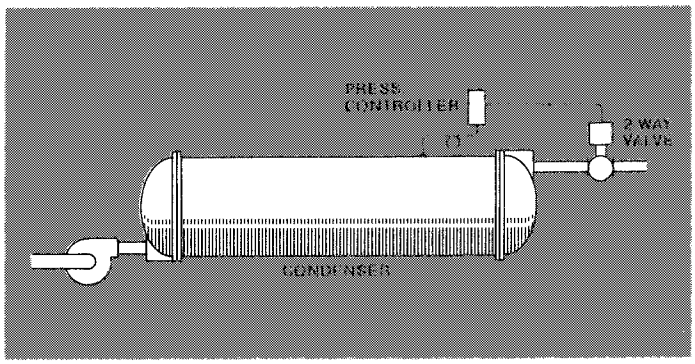

Figure 14

Electrical Interlocking

The Model CVHE CenTraVac requires a modest amount of system interlocking. Using the factory mounted starter option, interlocking is limited to six devices, per figure 4:

1. Chilled water flow switch (S5)

2. Condenser water flow switch (S7)

3. Condenser water pump pilot relay (K4)

4. Leaving chilled water temperature sensor (U3)

5. Chilled water pump interlocking contacts (K12).

6. Condenser water pump interlocking contacts (K13).

Separately mounted starters require additional control and power wiring. Figure 5 shows the specific terminals and wires that are needed to complete this interlocking.

Pneumatic Control

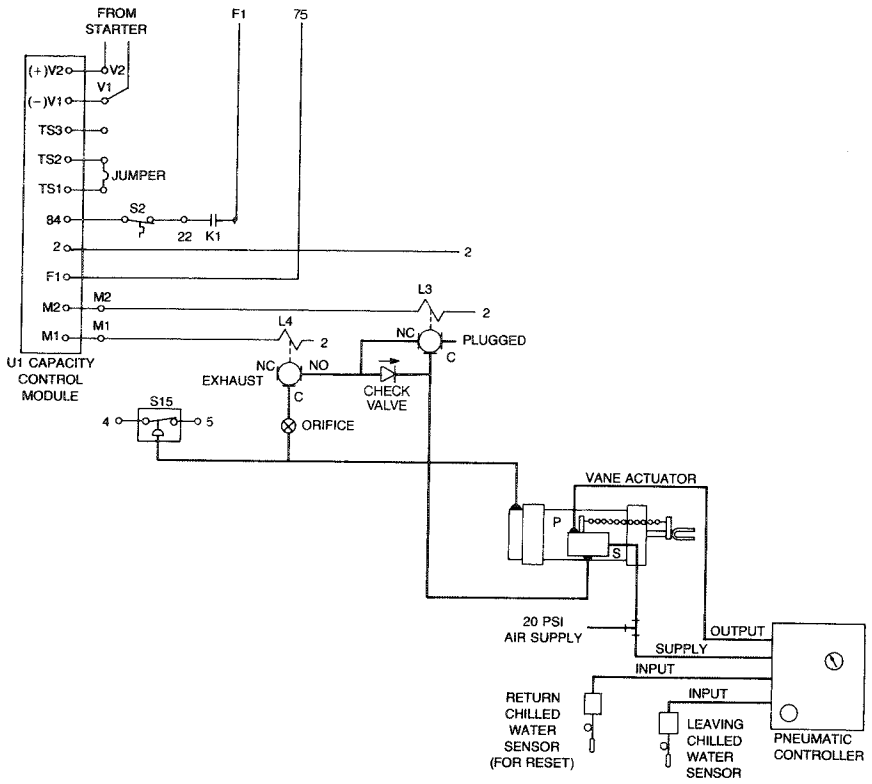

Figure 15

Clearly, the CVHE CenTraVac temperature control system is not pneumatic. However, for those designers that prefer to accomplish their control objectives pneumatically, an interface scheme is provided.

(Figure 15) In this scheme, an analog (proportional) signal from a conventional pneumatic temperature controller is fed into the pilot port (P) of the pilot positioner of a pneumatic inlet vane actuator. In addition, a jumper between terminals TS1 and TS2 of capacity control module U1 is substituted for the electronic leaving chilled water sensor U3, used in the previous scheme.

When the compressor motor starter assumes the "run" configuration, closing interlocking contacts K1, the continuous circuit between TS1 and TS2 causes the module to transmit a repeated, pulsed loading signal to solenoid valve L3. Unlike the previous scheme, the duration of this pulse is solely the function of motor current, in terms of its relationship to the "% Current" setting of the demand limiter. As before, the selected 10 to 310 second time lapse is observed between successive load pulses.

During the load pulse, the normally closed (NC) port of valve L3 is opened, permitting the output air pressure from the pilot positioner to be trans-

mitted through the normally open (NO) and common (C) ports to L4 to the vane actuator. Within the time interval of the load pulse, the pneumatic temperature controller has the authority to open the vanes or to hold the current vane position. However, its unloading authority is continuous. A reduction in chilled water temperature, resulting in a reduced output pressure from the pilot positioner, causes air to bleed back through the check valve. This equalizes the pressure within the vane actuator with that output by the pilot positioner, repositioning the vanes to balance the lesser load.

When the system is shutdown, opening K1, or a low refrigerant temperature condition opens S2, control module U1 transmits a continuous unloading signal. This signal closes the normally open (NO) and opens the normally closed (NC) ports of valve L4, exhausting control air pressure from the actuator, closing the vanes.

Load limiting is handled as it is in the previous scheme. As motor current rises, the duration of the loading pulse decreases. At 100 percent of the "% Current" setting of the demand limiter, the pulse duration drops from .25 second to zero. At 103 percent, a .25 second unloading pulse is initiated, followed by a 10 to 310 second null period, in an attempt to return the current to 100 percent of the demand limiter setting. Finally, at 105 percent, a continuous unloading pulse is established. It is terminated when the motor current is reduced to 95 percent of the setting.

While the loading function is curtailed during load limiting, the unloading function is not. As discussed, any load reduction is handled by the bleed-off of actuator pressure through the check valve. This enables the pneumatic temperature controller to retain uninterrupted unloading authority throughout the load limiting function.

Notice that control air is supplied to and exhausted from the vane actuator through an orifice. This orifice is factory adjusted to produce the same vane movement rate as that produced by the actuator used in the electric control system.

Finally, the pneumatic-electric switch (S15) replaces and performs the same function as the end switch (A3) of the electric inlet vane actuator, Figure 3, line 26.

The remaining circuitry of the pneumatic system is the same as that used by electric control.

Multiple Chiller Systems

Varying control strategies give rise to a great number of multiple chiller piping nd control concepts. Most CenTraVac installations involve more than one chiller. Therefore, it is important to describe a variety of common arrangements.

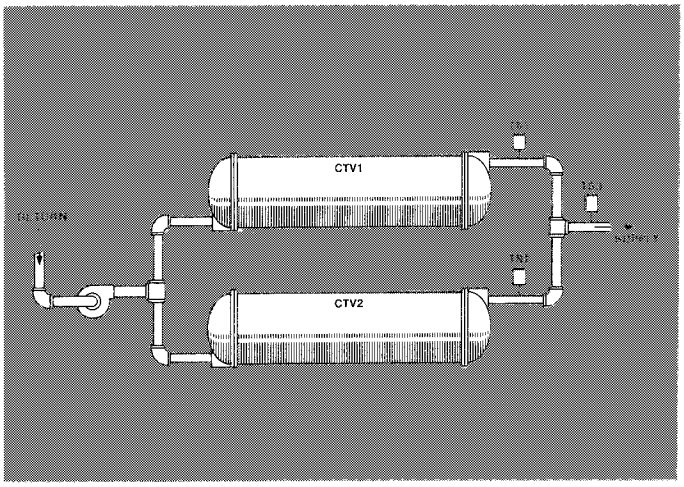

Figure 16

Two chillers, one pump...(Figure 16) A constant flow of chilled water is circulated through both chillers whether they are running or not. Obviously, this scheme allows water streams of possibly different temperatures to mix. The system return water temperature is common to both chillers. If one chiller is off, return water from CTV 1 mixes with supply water from CTV 2 to become the system supply temperature. This causes the common supply temperature to be higher than that of the water leaving the operating machine. It is an unavoidable consequence of this arrangement.

To obtain a controlled system supply temperature, the sensors of each chiller must be located in the common supply. The danger is that either operating chiller could "over chill" in an attempt to reach the correct common temperature. Each CVHE CenTraVac is equipped with a "low refrigerant" limit and cut out control. Used as a limiter, it will monitor refrigerant temperature and prevent it from becoming too low. This allows placement of the active water temperature sensor in the common supply line.

The next function to control is machine sequencing. The concept is to monitor CenTraVac motor current as it is processed into a 0 to 8.25 V. DC signal by A1. As the current exceeds a specific value for a duration of time, a second, or 'lag", chiller is allowed to start and accept load.

Sequencing is changed by simply reversing the position of a single pole double throw switch located in the sequence control panel.

The panel also contains two microprocessor based current monitors. One monitor module is dedicated to the "lead" chiller and the other to the "lag" chiller. In addition, several multi-pole relays are included in the panel.

The sequence of operation begins with a manual setting of the "lead-lag" switch. The lead chiller is now under the control of sensor TS3 located in the common chilled water supply. When the second chiller is directed to start, control of each CenTraVac is transferred to sensors TS1 and TS2 located in their respective supply water lines.

The reverse occurs when current in the "lag" chiller falls below the set current threshold, again, for an established duration of time. The "current and time to load" can each be set independently from the "current and time to unload". This provides a wide variety of loading strategies to be executed. Overlapping can be designed to obtain optimized performance from two machines. Lag chiller startup can be automatically delayed to accommodate a "real" need for two-machine operation.

In application, it is not necessary for the two CenTraVacs to be equally sized. Chillers are always operating on their own temperature controllers. Thus, the temperature control systems can be discretely set to operate as single chillers. The sequence control panel will not interfere with sensitivities or "ramp rates" originally dialed into the individual control panels. Separate flow switches are required for normal interlocking with each chiller.

Two chillers, two pumps...Figures 17 and 18 show two schemes. In the case of Figure 17, two pumps simply take the place of one. Thus, control is identical to the first arrangement.

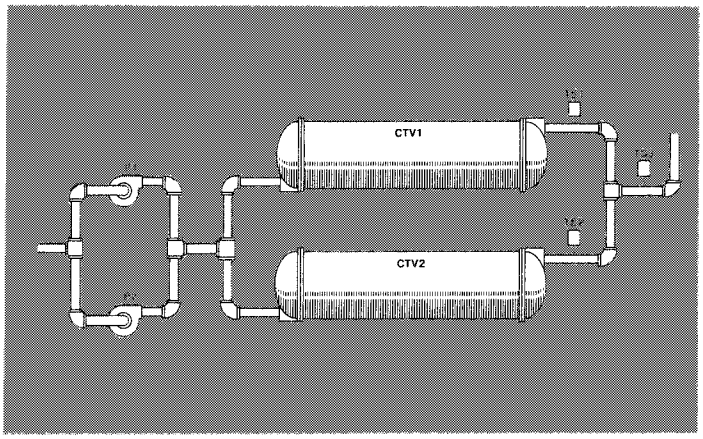

Figure 17

Multiple Chiller Systems

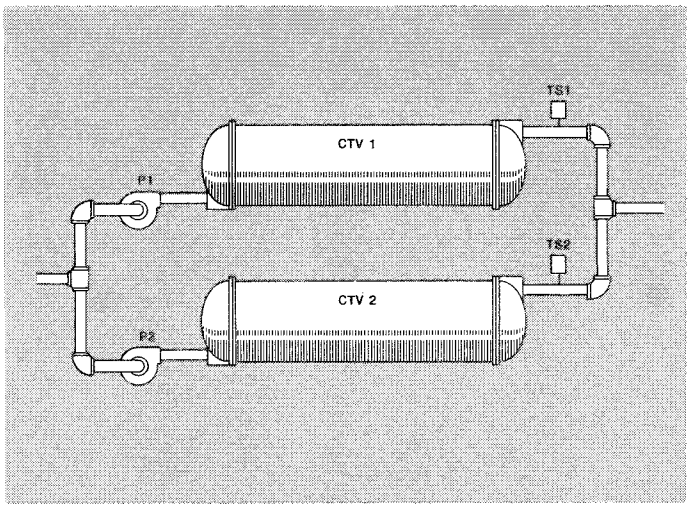

Figure 18

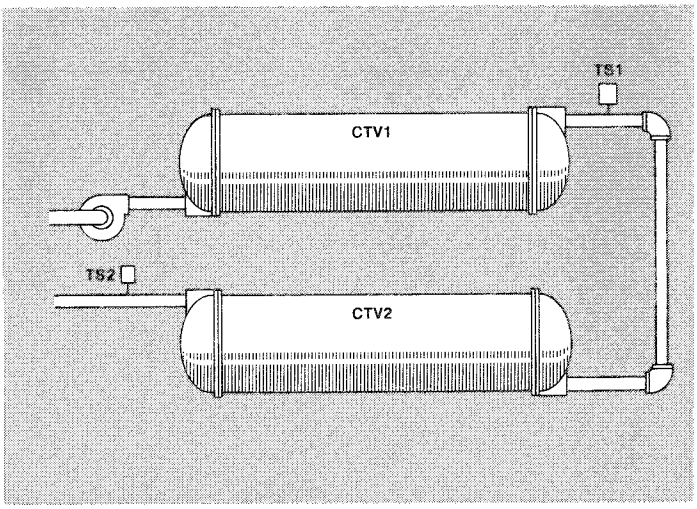

Figure 19

When pumps are to be sequenced in response to system demand, it can be accomplished as shown in Figure 18. In this case, a third temperature sensor is not needed because there is no mixing of dissimilar supply water temperatures.

Clearly, system flow changes as the number of pumps changes. This disruption in system dynamics introduces a measure of complication. Assume a condition of increasing load. As the "lead" chiller reaches its maximum capacity, the second pump is turned on. System water flow will nearly double even though the return water temperature will not fall immediately. The second CenTraVac will accept load as it responds to sensor TS2. Next, the return water temperature will fall rapidly as more system water is bypassed by the 3-way valves at the terminal coils. As long as the "drop out" current and time settings are below the reduced values that occur, the "lag" chiller will stay on the line. The required time setting can be expected to be longer than with the single pump system because of the time needed to restore system stability. However, the basic sequence control panel remains unchanged. The signal to start and stop the "lag" chiller also operates the "lag pump".

The two systems do not respond identically. In this case, the system is subjected to two different flow rates; one about 60 percent of the other. As long as all air conditioning terminals are satisfied with 60 percent flow (until the second chiller starts), loads will be met. But, if any loads cannot be met with low flow, they will simply suffer until the entire system loads the "lead" chiller to its "call" current. At that point, the "lag" pump and chiller are called to start. Again, this is a system characteristic and cannot be altered by control tactics or hardware.

Two chillers in series...(Figure 19) The sequence of control is identical to "two chillers, one pump", except that two sensors (TS1 and TS2) are used. Sensors are located just downstream from each chiller. Both chillers are set to control at the design supply temperature, so that either one can act as the "lead" machine. When both chillers are operating, they do not share the load equally. Instead, the upstream machine will take the greater load until both chillers are at full capacity.

Dual chiller control...The optional Sequence Panel (Figure 20) provides the type of control described previously for each of the dual CenTraVac arrangements (Figures 16 through 19).

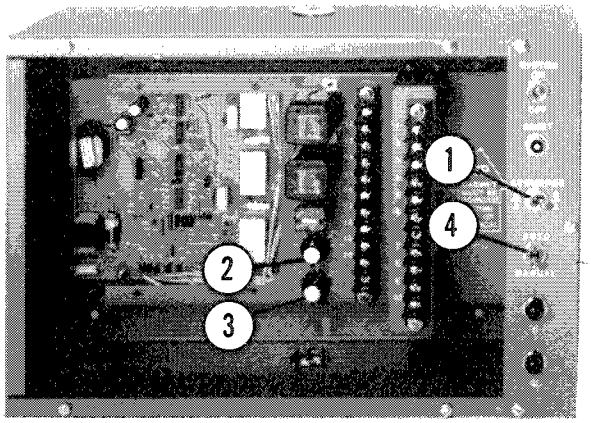

Figure 20

The "Sequence" switch (1) enables the operator to select the lead chiller. Once started, the panel monitors the current draw of the active machine. When the current equals, or exceeds, the adjustable "Load" threshold value (2) for a continuous 15 minutes, the lag chiller is started. The chillers then share the load.

When the current draw of both chillers equals, or falls below, the adjustable "Unload" threshold (3) for a continuous 15 minutes, the panel turns off the lag machine. The lead machine then loads, as necessary, to balance the remaining chilled water load requirement.

Placing the "Auto-Manual" switch (4) in the "Manual" position, bypasses the sequence panel. This arms both chillers, enabling them to respond to their individual control systems.

Multiple (3 or more) chiller control...Problems associated with temperature mixing, cross-connected pumps, flow variations and chiller redundancy create considerable design confusion for multiple chiller applications. The number of permutations and combinations of design schemes is well beyond the scope of this manual. In fact, most designers cannot afford the time to investigate all possible arrangements.

A simplifying technique has been applied successfully to a great number of multiple chiller systems. It involves separating the distribution pumping system from the production pumping system. Thus, the system hydraulics are "decoupled".

Figure 21 shows this basic arrangement. The variable flow distribution system can employ single or multiple pumps. Or, it can be a number of secondary pumping systems. The common element is a length of bypass piping that connects the return and supply headers.

Taken separately, the distribution and production pumping functions form complete hydraulic systems. Thus, events in one system do not affect pressures or flows in the other. The systems are hydraulically "decoupled".

From a control standpoint, the entire system is greatly simplified. Each pump-chiller combination operates as an individual and is independent from the remaining chillers. Capacity control is exactly as if each chiller were alone. Therefore, the conventional single chiller control system is perfectly suited for this arrangement.

Decisions on the number of chillers to operate are also simplified. Instead of using temperature as an indicator of system demand, flow is used. More accurately, relative flow is the indicator. If the distribution system demands greater flow than is being supplied by the number of chiller-pump combinations, return water is forced through the bypass into the supply header (left to right in the illustration). This will eventually cause the supply water temperature to rise and the system flow rate to increase further. This is a clear indication of the need for additional chiller capacity. Therefore, bypass flow in that direction is a signal to start another chiller-pump set. The additional flow will cause a reversal of the bypass line flow. Flow in this direction satisfies the needs of the distribution system.

Over capacity is also detected by bypass flow—but in the opposite direction (right to left in the illustration). When the flow in that direction exceeds the flow capacity of a chiller-pump, that pump (and its chiller) can be turned off without causing a flow reversal. Thus, bypass flow is used to indicate the need for more or fewer chiller-pump combinations.

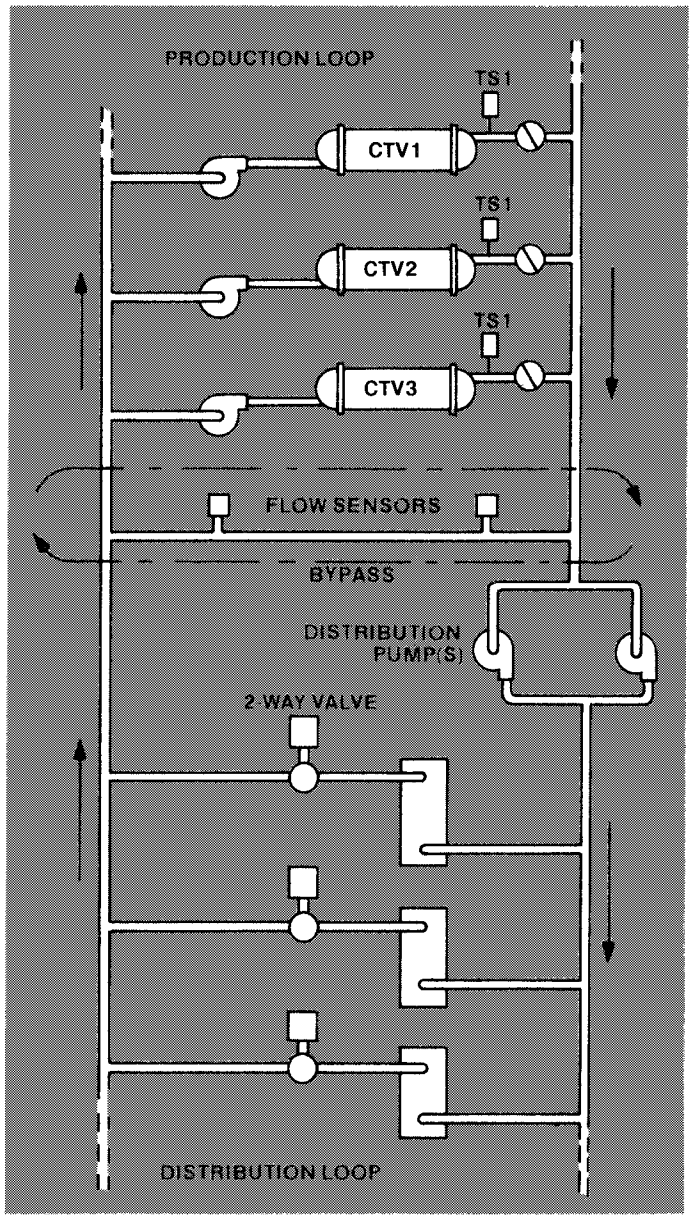

Figure 21

Integrating this concept with the Model CVHE CenTraVac control system is straightforward. The signal that requests additional flow accomplishes two things:

1. Starts an additional chilled water pump

2. Closes a pair of contacts bridging terminals F1 and 3 in the control panel of the associated CenTraVac. (Figure 3, line 16).

This initiating signal can be manual or automatic, depending on the control philosophy of the designer. Both arrangements use a simple impact type flow sensor signal. Figure 22 shows the manual scheme. Signals from electrical switches on the flow sensor (similar to "Annubar type 75") simply energize annunciator lights. The system operator can then start or stop chiller-pump combinations at his discretion.

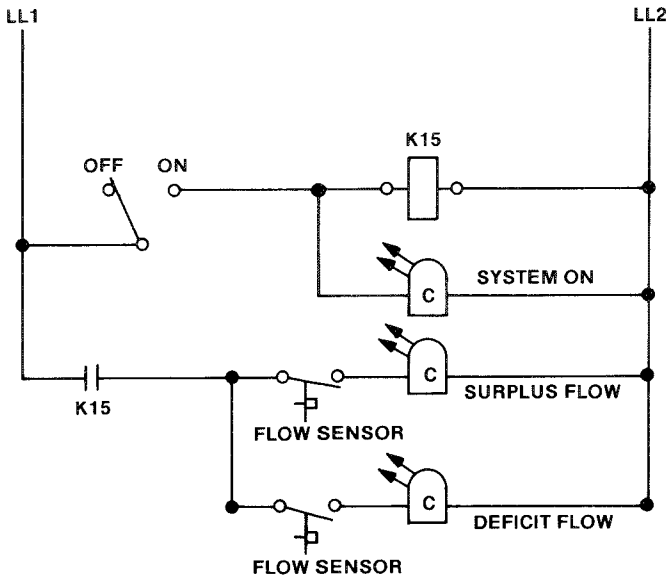

Figure 22

The automatic scheme shown in Figure 23 employs a Honeywell S684 step controller to actuate chiller-pump combinations. Signals from the flow sensors run the step controller in opposite directions to operate more or fewer chillers. Flow switches continue to be used as interlocks in each CenTraVac control panel (terminals 8 and 9).

Once this interlocking is completed, the CenTraVac capacity control system performs in the usual single chiller mode. An important benefit of this scheme is its energy optimization capabilities.

1. Chilled water is not produced unless it is required by the loads.

2. Chilled water is not allowed to circulate in the distribution system without experiencing a temperature rise.

3. Variable chilled water flow rate minimizes distribution system pumping power.

4. Chiller pumping is minimized (low pressure head; minimum chillers in operation).

5. Chillers run at their most efficient operating point.

Additionally, the decoupler system can be easily applied with thermal storage, heat recovery and on expansion projects. Chiller size, type and age are not critical. Thus, this system is extremely versatile and has wide application.

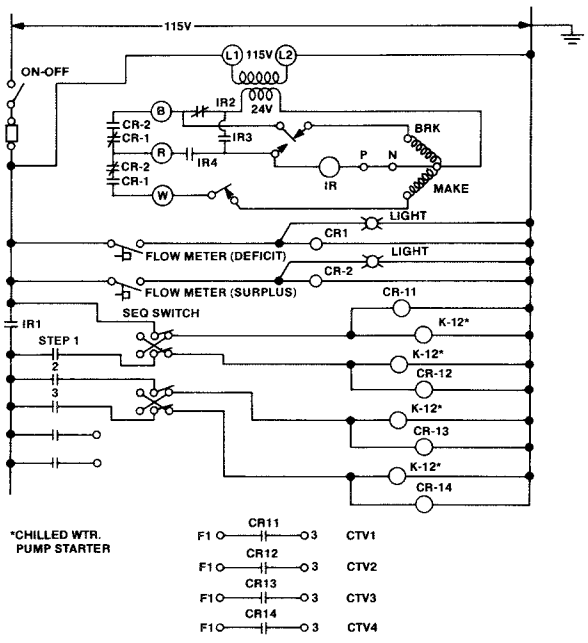

Figure 23

TRANE

Applications Engineering Manual

Model CVHE CenTraVacs With Microprocessor Based Control

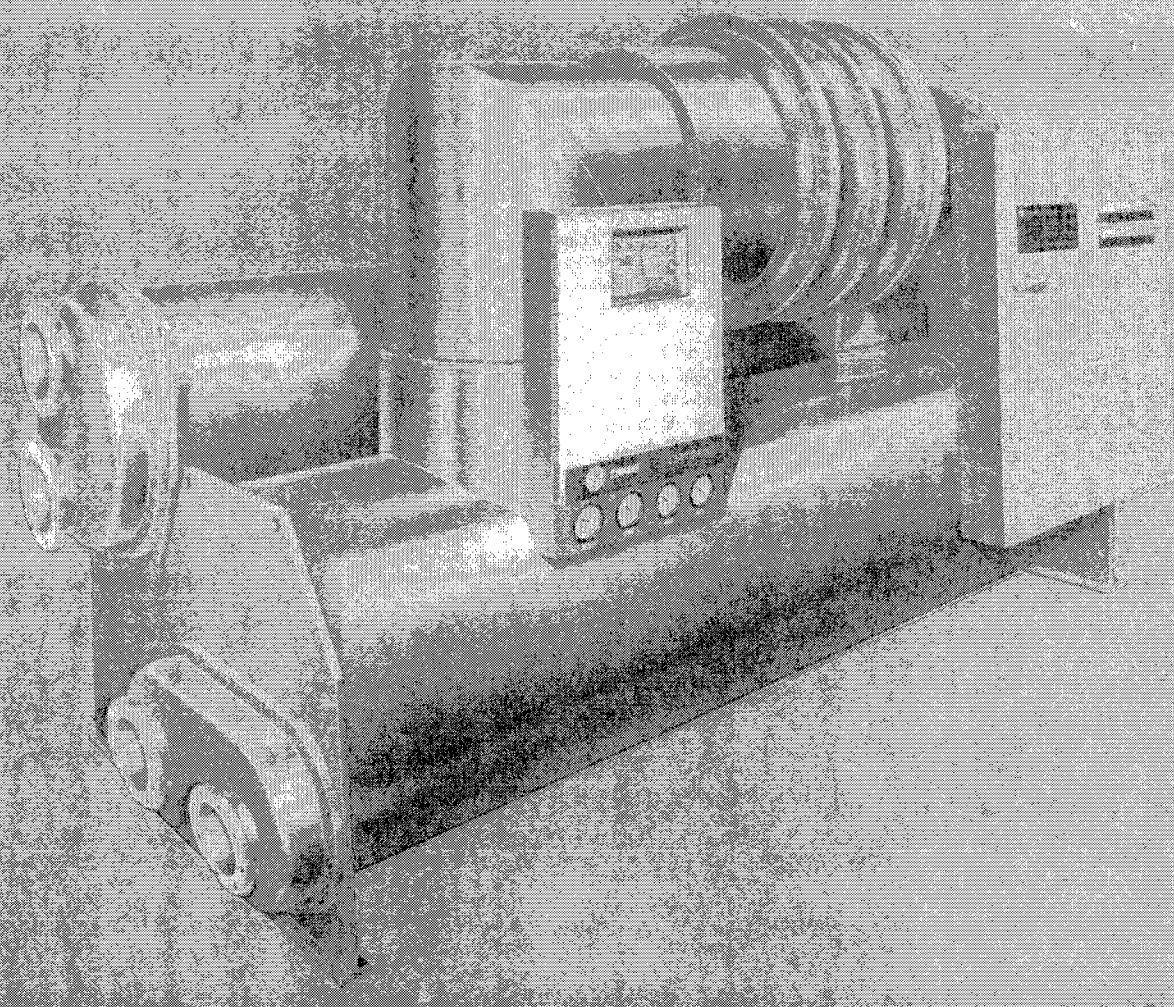

CON-AM-20 (389)

©American Standard Inc. 1987

Model CVHE CenTraVacs With Microprocessor Based Control

The Trane Company, La Crosse, Wisconsin 54601

Purpose

This manual has three purposes:

- To provide a hardware description of the standard single-unit control system and components,
- To provide an explanation of the control system's operation and function,
- To provide information regarding the application of the standard control system to various CenTraVac configurations.

Note: The descriptions in this manual apply specifically to design sequence K CenTraVacs (the tenth digit in the CenTraVac model number is "K"). Other models may vary in detail.

Contents

Hardware 2
Inputs 2
Chiller Switch 2
Oil Pump Switch 2
Purge Switch 2
Free-Cooling (Optional) 3
Chilled Water Setpoint 3
Current Limit Setpoint 3
Vane Control Switch 3
Outputs...Status Lights 3
Chilled Water Flow 3
Cooling Required 3
Running 3
Loading 3
Unloading 3
Manual Reset Required 3
Remote Chilled Water Setpoint 3
Remote Current Limit Setpoint 4
Outputs...Display 4
Operating Mode 4
Diagnostic Codes 4
Outputs...Gages And Meters 4
Low Oil Pressure 4
High Oil Pressure 4
Evaporator Pressure 5
Condenser Pressure 5
Hour Meter 5
Start Meter 5
Non-UCM Devices 5
Condenser High Pressure Switch 5
Differential (Oil) Pressure Switch 5
Output Relays 5
Other Electrical Components 5
UCM 6
Relay/Output Module 6
Power Supply/Output Module 6
Micro Module 6
System Operation 8
Power Supply 8
Starting Sequence 8
Stopping The Compressor 8
Sequence Of Operation 12
CenTraVac System Control 14
Capacity Control 14
Control Accuracy 14
Load Limiting 14
Other Variables That Alter Inlet Vane Position 14
Motor Protection 14
Motor Current Overload 15
Momentary Power Loss 15
Low Voltage 15
Phase Loss or Imbalance 15
Phase Reversal 15
High Motor Temperature 15
Maximum Acceleration Time 15
Transition 15
Control Options 15
Relay Package 15
Condenser Limit Control 15
Bearing Temperature Sensors 16
Chilled Water Reset 16
Serial Communications Interface 16
Condenser Water Control 16
Compressor Motor Starter 17
Application 18
Single Chiller Systems 18
Basic Control 18
Control Accuracy 19
Variable Flow 19
Process Chilled Water Systems 19
Multiple Chiller Systems 21
Heat Recovery 22
Auxiliary Heat Recovery 22
Controlled Heat Recovery 22
Heating As Primary Mission 22
Interfacing With Other Controls 23
Hot Gas Bypass 23
Free Cooling 23
Low Temperature (Brine Chilling) 24
Appendix 25
Index 26

Hardware

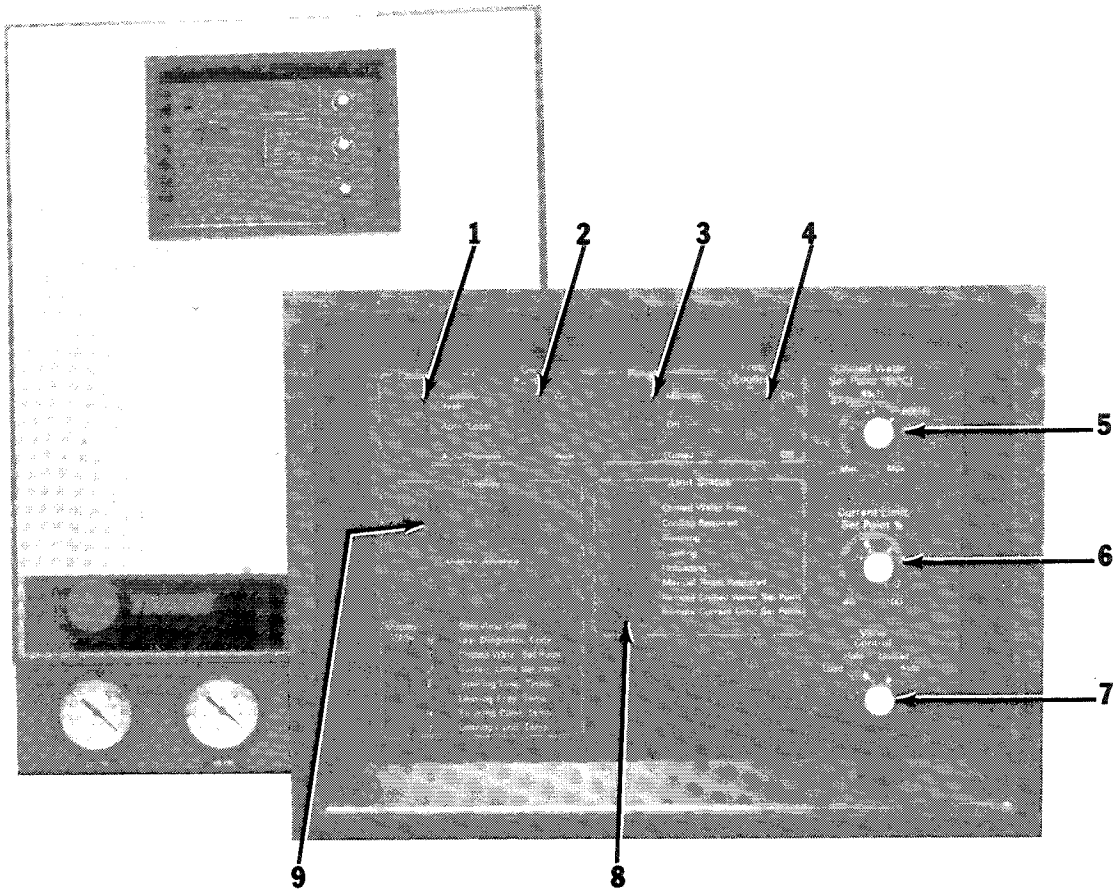

Figure 1

Figure 1 shows the CenTraVac, microprocessor-based, unit control panel (UCP 695), highlighting the man-machine communication adjustments and displays. The communication capabilities are divided into "inputs" and "outputs".

(Note: It may be helpful to refer to the complete electrical line diagram, Figure 5, page 10, when specific component references are made.)

Inputs

1. Chiller Switch. . . This 3-position switch determines CenTraVac operating mode:

Standby/Reset. With power applied and the switch in this position, the control system is armed, but unit operation is prevented. The operating code "A 0" appears on the display. This position is used by the operator to clear a latching diagnostic (a fault requiring manual reset).

Auto/Local. In this position, the CenTraVac is allowed to run automatically in response to the panel control settings.

Auto/Remote. In this position, the CenTraVac runs automatically in response to setpoints established at a remote device and communicated to the panel via the optional "Serial Communications Interface" (SCI). If no SCI link exists, or there are no remote setpoints established, control reverts to the local settings.

2. Oil Pump Switch. . . This 2-position switch determines the operating mode for the lubricating oil pump motor.

On. In this position, the oil pump motor runs continuously. The CenTraVac cannot start when this switch is on. This switch position should only be used by a competent service engineer since a latching diagnostic will occur, requiring manual reset.

Auto. This is the normal position. Operation of the lubrication system is supervised by the Unit Control Module (UCM).

3. Purge Switch. . . Any of three operating modes can be selected:

Manual. The purge unit will run continuously in this position. Refer to "Operation-Maintenance CVHE-M-3" to properly operate the purge system in this mode.

Off. When this switch is in this position, the purge system will not operate UNLESS it is already running in the "timed" mode. WARNING: The purge unit can operate, under certain conditions, with the switch in the "off" position.

Timed. This is the normal position. The purge unit operates in response to a timer and a purge pressure switch. The purge compressor will be run five minutes out of every two hour period of chilled water system demand. Operation is extended automatically by four minutes whenever the pressure switch indicates noncondensibles remain in the CenTraVac. The run time is again extended so long as the pressure switch remains unsatistfied.

4. Free-Cooling (Optional)...Operation of the "Free-Cooling Option" requires this switch to be turned "on" manually. A set of free-cooling valves are opened and the compressor is prevented from running. When this switch is turned "off", the compressor will not be allowed to restart until the free-cooling valves have repositioned closed.

When the CenTraVac is equipped with the (remote) SCI option, free-cooling can be turned on or off remotely, regardless of the position of this (local) free-cooling switch.

5. Chilled Water Setpoint....This manually adjustable potentiometer is used to establish the setpoint for the leaving chilled water (supply) temperature. Remember, this is the SETPOINT (an input value), and not the actual supply chilled water temperature.

6. Current Limit Setpoint....This manually adjustable potentiometer is used to establish the load limiting (current) setpoint. Continuously variable dial settings between 40 and 100 percent of motor "rated load amps" (RLA) are available. This, also, is an input value and does not reflect the actual motor current.

7. Vane Control Switch....This 4-position switch determines what signals are sent to the compressor inlet vane operator.

Load. As long as the vane control switch remains in this position, the "vanes open" relay (1U1Q7) is continuously energized. Normal automatic vane control is suspended. However, three limiting actions take precedence over manual loading...1) motor current limit, 2) condenser pressure limit, and 3) evaporator temperature limit. Approach to any of these three limits supercedes manual loading.

Hold. With the vane switch in this position, both the "vanes open" relay (1U1Q7) and the "vanes close" relay (1U1Q8) are de-energized. Inlet vanes will remain in their present position, unless one of the three limits (motor current, condenser pressure, or evaporator temperature) is approached. The "hold" position also redefines the menu of codes appearing in the "condition display window". A further explanation of this is found under "Display", page 4.

Unload. This switch position energizes the "vanes close" relay (1U1Q8). Automatic inlet vane control is suspended.

Auto. This is the switch's normal position. Inlet vanes are controlled automatically by the controller microprocessor, or "unit control module" (UCM). Details of this controller's action are found under "Capacity Control", page 14.

Outputs...Status Lights (Figure 1)
A series of eight status indicator lights (8) are located directly below the purge switch. These blue lights provide the operator with specific CenTraVac system information. The first four lights are sequential. That is, they will only light in sequence. The remaining four can light out of sequence.

- Chilled Water Flow...Illumination of this light occurs when the chilled water flow switch (5S2) is closed, indicating water flow in this circuit.
- Cooling Required...This light illuminates only when chilled water flow is established and the controller (UCM) detects a demand for cooling. A requirement for cooling is found when the leaving chilled water temperature exceeds the chilled water setpoint by a value greater than the "differential-to-start" criteria (a variable input to the UCM, as described on page 9).
- Running...This light will illuminate when the chiller is running in either of the two "Auto" (chiller switch) modes, and the starting sequence is complete. It will also remain lit when the unit is in its post-lube cycle, even though the compressor has been shut down.
- Loading...This light glows when the inlet vane operator is opening the vanes. It is normal for signals to the inlet vane operator to occur in short pulses.
- Unloading...Likewise, this light glows when the inlet vanes are being moved toward the closed position.
- Manual Reset Required...This light indicates that a latching diagnostic has occurred and the chiller is shut down. Unit operation cannot resume until the chiller switch is manually placed in "Standby/Reset" and returned to one of the "Auto" positions.
- Remote Chilled Water Setpoint...This light indicates that a remote device (through the SCI) has established the setpoint. The local setpoint is ignored unless the SCI link is broken. It will also light when either of the chilled water reset options is active.

Hardware

- Remote Current Limit Setpoint. . . Similar to the action of "Remote Chilled Water Setpoint", above, this light indicates that a remote device has established the current limit setpoint.

Outputs. . . Display (Figure 1)
A blue, 4-digit, vacuum fluorescent display and a "Display Advance" push-button (9) provide access to four specific types of operator's information:

1) Operating Mode, 2) Diagnostic Code,
3) Setpoints, 4) Measured Temperatures

The "Display Advance" push-button simply scrolls through each entry of the operator's display menu sequentially as the button is pressed. A blank display signifies the end of the menu. To go to the top of the menu, press the push-button once.

Operating Mode. . . The first of the three digits is a code prefix, telling which of the eight operating mode menu items is indicated. Table 1 shows the eight code prefixes and their meanings.

Table 1

Code Prefix	Description
A	Operating Mode
b	Last Diagnostic
C	Chilled Water Setpoint
d	Current Limit Setpoint
E	Entering Chilled Water Temp
F	Leaving Chilled Water Temp
H	Entering Condenser Water Temp
J	Leaving Condenser Water Temp

The last two digits of the display indicate which specific operating mode, diagnostic, setpoint or temperature exists, as defined by the prefix. Table 2 shows the menu of operating modes (Prefix "A").

Table 2

Last 2 Digits	Description of Operating Mode
Blank	Power Off
0	Standby/Reset
1	Auto (Local Or Remote)
9	Free Cooling
70	Restart Inhibit
71	Establish Cond Water Flow
72	Start
74	Run: Normal
[1]75	Run: Current Limit
[2]76	Run: Condenser Limit
[3]77	Run: Evaporator Limit
[4]78	Run: Surge Condition
79	Posts-Lube
88	Reset

For example:

[1]As the current limit setpoint is approached, the UCM restricts further inlet guide vane opening.

[2](Optional) As the condenser pressure limit setpoint is reached, the UCM restricts additional compressor loading to avoid high condenser pressure shut down. In this operating mode, a "head relief request" (optional relay) is initiated.

[3]Further opening of the inlet vanes is restricted to avoid a unit shutdown on low evaporator refrigerant temperature.

[4](Optional) Compressor loading is suspended and a "head relief request" (optional relay) is initiated. An automatic CenTraVac shutdown will occur if the unit remains in surge for a 15 minute period.

Diagnostic Codes. . . The "Last Diagnostic" codes (Prefix b) are listed in the Appendix. Diagnostics occur only when an abnormal CenTraVac shutdown occurs. If the UCM detects a diagnostic condition, the display alternately flashes between the diagnostic code and the operating code. The "Last Diagnostic" code is erased when the "chiller switch" is placed in the "Standby/Reset" position and then in one of the "Auto" modes. Advancing past the "Last Diagnostic Code" entry in the menu automatically clears the code registered there from memory.

Codes prefixed by a "C" or "d" are followed by the corresponding setpoint value, local or remote, as applicable.

"E", "F", "H" and "J" code prefixes are followed by an actual measurement of the specific system parameter. If the particular sensor is not installed and connected to the control panel, the display will show "----".

Note: The display is redefined to a "Serviceman's Menu" by placing the vane control switch in the "hold" position. Refer to "Operation-Maintenance CVHE-M-3" for instructions on the use of this menu.

Outputs. . . Gages And Meters (Figure 2)

1. Low Oil Pressure. . . This gage monitors the oil pressure inside the oil tank reservoir. Since this reservoir is vented to compressor suction, the Low Oil Pressure should be very close to evaporator pressure.

2. High Oil Pressure. . . This gage measures the pressure in the oil supply line to the compressor bearings. The differential between this pressure and the "Low Oil Pressure" is the net oil pressure.

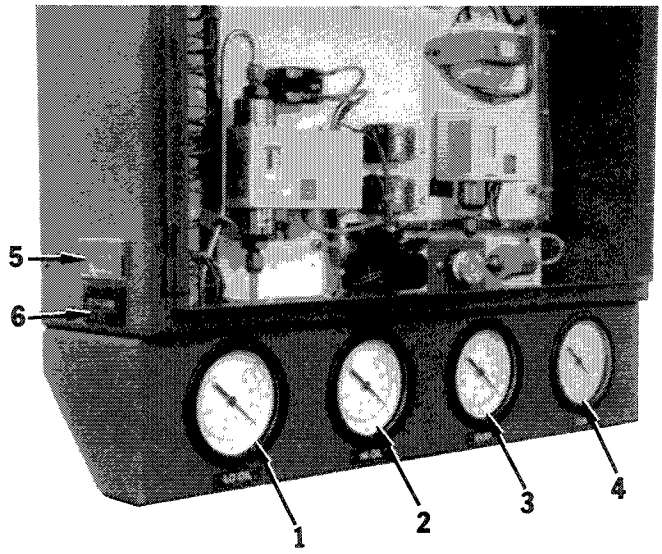

Figure 2

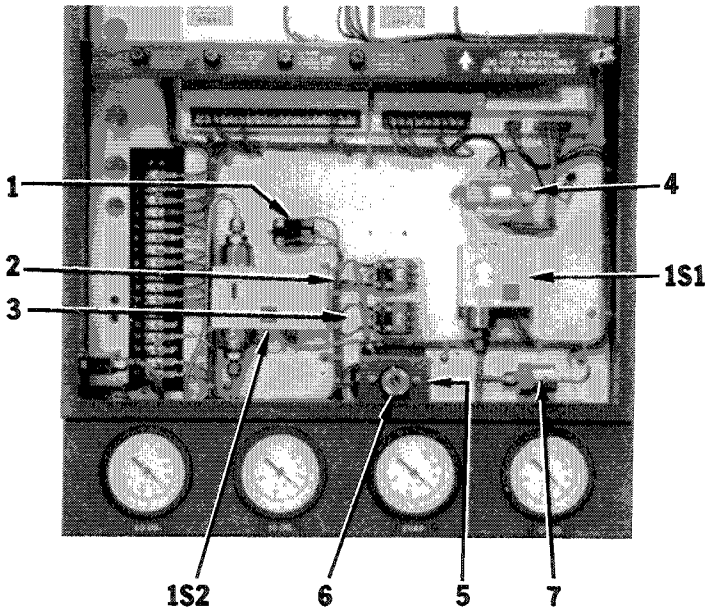

Figure 3

3. Evaporator Pressure . . . This gage indicates the refrigerant pressure in the evaporator.

4. Condenser Pressure . . . This gage indicates the refrigerant pressure in the condenser.

5. Hour Meter . . . This meter indicates the accumulated hours of chiller operation. It will record a maximum of 99,999.9 hours, at which point it restarts at zero hours. It is not resettable.

6. Start Meter . . . This meter displays the accumulated number of compressor starts that have been attempted. It will record 99,999 starts before restarting at zero. It, too, is not resettable.

This completes a description of the operator-machine interface portion of the CenTraVac control panel. Normal chiller operation does not require the panel door to be opened. However, there are a number of important control elements inside the panel.

CVHE safety and operating controls are partitioned into 2 major sections: the Unit Control Module (UCM) and the "non-UCM" devices described below.

Non-UCM Devices (Figure 3)

Condenser High Pressure Switch (1S1). . . . This safety control opens when it detects a condenser refrigerant pressure that exceeds its setting. A chiller shutdown caused by this control produces a latching diagnostic (code "b F5") requiring manual reset. The cutout pressure setting of this control is not automatically coordinated with the setting of the optional "Condenser Limit Control", page 15.

Differential (oil) Pressure Switch (1S2) . . . This operating control senses the "high" and "low" oil pressures. See table 3 for control values.

Output Relays . . .

1. 1K8. Oil pump starter.

2. 1K16. Chilled water pump relay.

3. 1K17. Condenser water pump relay.

K15. (Optional) Hot gas bypass relay.

Other Electrical Components . . .

4. Control Power Transformer (1T1).

5. Oil Pump Capacitor (1C1).

6. Oil Pump Fuse (1F1).

7. (Optional) Condenser pressure transducer.

Table 3

Safety Control Unit Cutouts		Control Trip Point	Diagnostic Code
Motor Winding Temperature Run Inhibit		265 ± 15 F	b E7
High Oil Temperature Run Inhibit		180 ± 2 F	b F4
High Bearing Temperature Run Inhibit (Optional)		180 ± 2 F	b EA b Eb
Differential Oil Pressure Switch	Opens Closes	9 psig diff. 11.5 to 15 psig diff.*	b E8 or b F2
High Condenser Pressure Cutout Switch	Std. units ASME units	15 ± 1 psig 25 ± 1 psig	bF5
Low Water Temperature Cutout, Lvg. Chilled Water		35 ± 1 F	None . . . auto reset

*Switch has non-adjustable 2.5 to 6 psi differential range.

Hardware

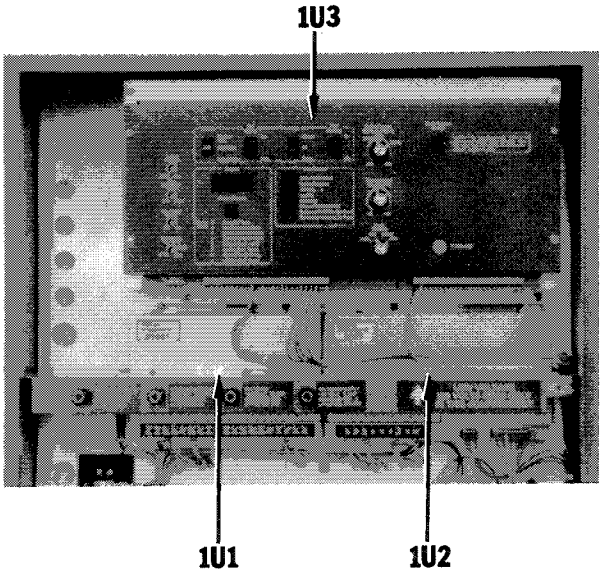

Figure 4

UCM (Figure 4)
The Unit Control Module is actually a series of microprocessor based sub-assemblies that handle most of the safety and control functions. Sub-assembly sections are:

Relay/Output Module (1U1)...This module contains the relays that interface panel microelectronics with specific electrical devices outside the panel. Its terminal strip identification is (1TB1).

- Compressor Inlet Vane Operator (4B2): Open (1U1Q7), Close (1U1Q8).
- Condenser Water Pump Relay (1U1K6).
- Purge Unit Relay (1U1K9).
- (Optional) Head Relief Request Relay (1U1K3).
- (Optional) Alarm Relay (1U1K4).
- (Optional) Free Cooling and Auxiliary Free Cooling Relays (1U1K1 and 1U1K2).

Power Supply/Output Module (1U2)...This module contains the power supply for microelectronic circuits and relays. Further, it provides relay contact closures to interface with specific devices outside the panel. Its terminal strip identification is (1TB2).

- Reset Relay (1U2K1).
- Stop Relay (1U2K2).
- Overload Relay (1U2K3).
- Compressor Start Relay (1U2K4).
- Starter Transition Relay (1U2K5).
- Oil Heater Relay (1U2K6).
- Oil Pump Relay (1U2K7).

Micro Module (1U3)...This module houses the microprocessor that contains all control algorithms for the CenTraVac control system. It accepts a variety of sensor inputs through terminal strips (1TB3, 1TB4 and 1TB6).

- Leaving Chilled Water Temperature (4RT1).
- (Optional) Entering Chilled Water Temperature (4RT2).
- (Optional) Entering Condenser Water Temperature (4RT3).
- (Optional) Leaving Condenser Water Temperature (4RT4).
- Evaporator Refrigerant Temperature (4RT5).
- (Optional) Ambient (air) Temperature (4RT6).
- Chilled Water Flow (1K16).
- Condenser Water Flow (1K17).
- Inlet Vanes Closed (4B2).
- Differential Oil Pressure Switch (1S2).
- (Optional) Running External Interlock (5S4).
- Transition Complete (2K2).
- Oil Temperature (4RT7).
- Motor Winding Temperature (4B1R2, 4B1R3 and 4B1R4).
- (Optional) Bearing Temperature #1 (4RT8).
- (Optional) Bearing Temperature #2 (4RT9).
- Motor Current (from current transformer 2T5).
- Motor Current (from current transformer 2T6).
- Motor Current (from current transformer 2T7).

Chilled Water Reset Interface Module (1U4)...This optional module is mounted in the control panel when the Chilled Water Reset Interface option is installed. It accepts one input (4 to 20 ma or 0 to 10 vdc reset signal) and is connected to the 1U3 module. Its terminal strip designation is TS1.

Based on these inputs, this module performs four basic functions:

1. It controls the leaving chilled water temperature in response to the setpoint by repositioning the compressor inlet guide vanes.

4. It executes start and stop sequences.

In addition, this module can (optionally) perform either of two mutually exclusive control options:

- System Controller Interface (SCI)... This option provides a proprietary interface with a higher level control authority "Trane System Control Panel". This system is described more fully, beginning on page 23.
- Chilled Water Reset (CWR)... This option enables the UCM to reset the chilled water temperature setpoint based on load (entering chilled water temperature) or ambient air temperature.

System Operation

The control logic that governs the CenTraVac chiller system takes the form of algorithms that reside in UCM memory. Two references embellish the written explanations. They are Figures 6 (a time-line of sequential events) and 5 (a line wiring diagram).

Power Supply. . . With the power supply disconnect switch or circuit breaker (2CB1) closed, 120 volt power is provided through control power transformer (2T4) and a 30-amp starter panel fuse (2F4) to terminal 1TB5-1. From this point, control voltage is available through:

Fuse (1F2), supplying power to the micro module (1U3), starter control, oil heater, and secondary transformer 1T1 circuits.

Fuse (1F3), supplying power to the oil pump and inlet vane operator circuits.

Fuse (1F4), supplying power to the purge control system.

The 1F2 branch circuit directs power to five separate subcircuits:

1. The micro module (1U3). The relay output module (1U2) and the power supply module (1U1) all receive power through another fuse (1F5) and the power supply transformer (1T1).

2. The oil sump heater (4HR1) is energized through the normally- open K6 contacts of the power supply output module (1U2). Temperature sensor (4RT7), located in the oil sump, controls K6 to keep the oil temperature between 140F and 145F.

3. Chilled water flow switch (5S2) circuit. . . Closure of this switch and the chilled water pump electrical interlock (5K1) energizes relay 1K16, giving the micro module an indication that chilled water flow does exist.

4. Condenser water flow interlock (5S3) circuit. . . Closure of this switch and the condenser water pump electrical interlock (5K2) energizes relay 1K17, giving the micro module an indication that condenser water flow does exist.

5. Starter Control circuit. . . The state of relay contacts K1 (reset), K2 (stop) and K3 (overload) are determined by logic executed in the micro (1U3). When they appear "closed", control voltage passes to the compressor "start" relay (K4). If all preconditions for start-up are met, the micro sends a signal to the power supply output module (1U2) to close the K4 contacts. A "start" signal is passed along to the compressor motor starter relay (2K5). Simultaneously, control voltage flows to the start counter (1M2) and the hour meter (1M1).

Starting Sequence. . . The following paragraphs describe the starting sequence for a conventional wye-delta, closed transition type starter, commonly used on CenTraVac compressor motors.

Relay 2K5 has two sets of N.O. contacts. The first set (Line 18) closes to lock the starter relay into the control circuit around the K4 contacts. The second (Line 19) enables control voltage to flow through the N.C. contacts of 2K2 (starter start, 1M) and 2K4 (starter transition, 1A) to the coil of starter contactor 2K3 (starter star, S).

When star contactor (2K3) energizes, its N.O. auxiliary contacts (Line 21) close, allowing control voltage to pass to the coil of starter contactor 2K1 (starter start, 1M). Auxiliary contacts lock 2K1 in, around the auxiliary 2K3 contacts. Power is now supplied to the compressor motor (4B1) in the Wye, or Star, configuration through the 2K3 and 2K1 contactors.

As the compressor accelerates, compressor motor current decreases. When motor current falls to 85% of the motor RLA setting, the micro sends a signal to (1U2) to close the N.O. contacts of transition relay K5. This energizes the coil of transition contactor (2K4) and causes its N.C. set of auxiliary contacts (Line 19) to open.

With the star contactor (2K3) now open, 2K3 drops out and its N.C. auxiliary contacts (Line 22) reclose, allowing control power to reach the coil of starter contactor (2K2) (starter run, 2M). Contactor 2K2 is locked in by a set of auxiliary contacts (Line 23) around auxiliary contacts on 2K3 and 2K1 (Lines 21 and 22). Further, an auxiliary set of N.C. 2K2 contacts open (Line 19) to interrupt control voltage to the transition contactor 2K4.

Within the starter itself, contactors "S" and "2M" are physically prevented from closing simultaneously. This is in addition to the foregoing electrical interlocks.

The compressor is now operating in the normal "run" mode. It will continue to operate this way until the "net state" of the K1, K2 and K3 contacts in (1U2) "open". At this point, voltage to the starter relay (2K5) disappears and starter relays are de-energized.

Stopping The Compressor. . . Any of the following conditions will cause the "net state" of the K1, K2 and K3 string of contacts in module 1U2 to be open, stopping the compressor:

1. Chiller switch is placed in "Standby/Reset",

2. A latching or non-latching diagnostic is detected by the UCM, or

3. Chilled water load (by virtue of a decrease in return water temperature) is insufficient to keep the chiller operating. The setpoint for this control is determined by adjusting the "differential to start" (a serviceman's control setting on the control panel). Table 4 shows recommended "differential to start" settings.

Table 4 — Recommended Differential to Start Settings

Chiller Delta T Degrees F	Setting Deg. F	Degrees Below Setpoint Where Chiller Shutdown Occurs (Exit CHW Temp)
4 or less	2.0	2.0
5 or 6	3.0	2.0
7 or 8	4.0	2.0
9 or 10	5.0	2.0
11 or 12	6.0	2.0
13 or 14	7.0	2.0
15 or 16	8.0	2.4
17 or 18	9.0	3.2
19 or more	10.0	4.0

As an example, consider a chilled water system designed for a full load delta-T of 12 F and a supply water temperature of 44F. By setting the temperature controller at 44F and the "differential to start" at 6F, the chiller will start when the supply and return temperatures rise to 50F. While this may seem to represent a 50% chiller load, it probably does not. The 50F return temperature occurs only because the chiller is not running. As soon as the supply temperature is decreased to 44F, the return will also decrease. The chiller will continue to run, controlling the supply water to 44F, until its minimum capacity exceeds the real system load. At this point, both the supply and return temperatures will steadily fall, until the return temperature drops 2.0F below the setpoint of 44F. At 42F the chiller will automatically stop and remain stopped until the system water again warms to 50F.

Fuse 1F3 Branch Circuit.

Oil Pump Circuit. . . The 1F3 branch circuit sends 120 volt control power through fuse 1F1 to the oil pump motor (4B3). Fuse 1F1 protects the oil pump motor from overcurrent conditions. Parallel contacts of the compressor motor starter interlock (2K1) and the oil pump relay (K7 in 1U2) keep oil pump motor starter (4B3) energized. While the location of K7 is 1U2, its status is controlled by the micro (1U3).

The oil pump motor is a single-phase capacitor start motor. The capacitor is engaged when its high starting current flows through current sensing relay (1K8). The "start" winding provides additional starting torque. As the motor accelerates, its lower current drops out the starting relay (1K8), and the motor runs on its "run" windings only.

As long as the micro calls for oil pump operation, it will run. Further, parallel contacts from the compressor motor starter (2K1) will keep the oil pump operating any time the compressor motor is running, whatever the cause. Oil pump operation ceases only when both K7 and 2K1 open.

Inlet Vane Actuator Circuit. . . 120 volt power enters the inlet vane actuator motor (4B2) at terminal 2. This motor is highly accurate in positioning the inlet vanes. It runs either to the "open" or "closed" position. Therefore, small, precision movements are accomplished by "pulsing" the motor.

Pulsing signals are generated by Triac switches (Q7 and Q8) located in the relay output module (1U1). Appearing like relays, Q7 and Q8 are controlled by the micro (1U3).

Fuse 1F4 Branch Circuit.

Purge System Circuit. . . The purge system automatically rejects impurities that may leak into the CenTraVac. This includes both condensible (mainly water) and non-condensible (mainly air) impurities. Since one is usually not present without the other, the need for purging is signalled by an increase in purge drum pressure, after a brief period of purge compressor (3B4) operation.

Automatic purge operation involves periodic timed purge compressor running. If no impurities are found, the purge compressor will run for 5 minutes out of every 2 hour period that chilled water flow is available and the chiller is in one of the two "auto" positions. The presence of impurities elevates the purge drum pressure and extends running time through the action of timer (3DL1) and pressure switch (3S1).

A more complete explanation of manual and automatic purge unit operation is found in "Operation/Maintenance CVHE-M-3".

System Operation

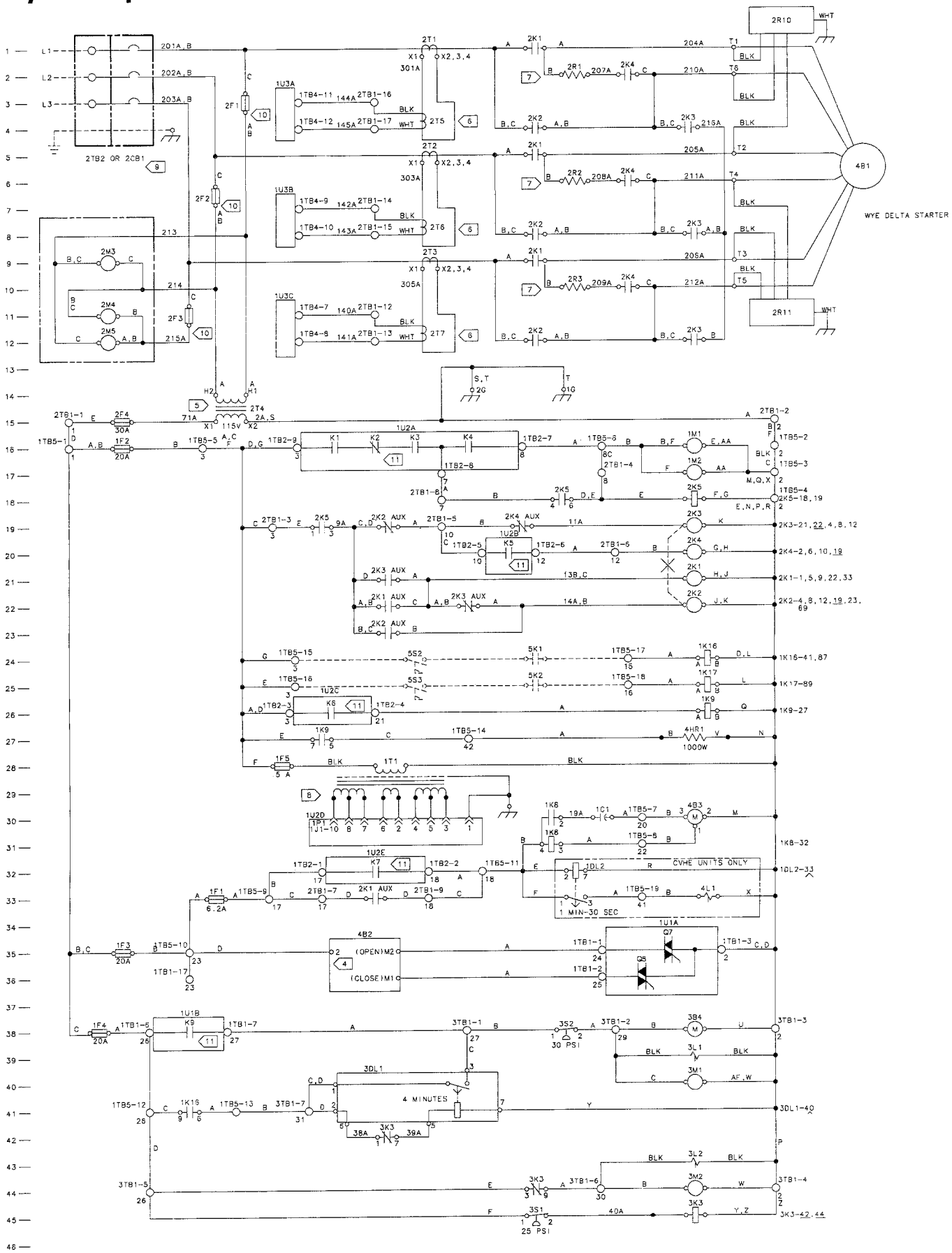
L1
L2
L3
201A,B
202A,B
203A,B
2TB2 OR 2CB1
2F1
2F2
2F3
2F4
1F1
1F2
1F3
1F4
1F5
2M3
2M4
2M5
213
214
215A
2T1
2T2
2T3
2T4
2T5
2T6
2T7
1U3A
1U3B
1U3C
1TB4-11
1TB4-12
1TB4-9
1TB4-10
1TB4-7
1TB4-8
144A
145A
142A
143A
140A
141A
2TB1-16
2TB1-17
2TB1-14
2TB1-15
2TB1-12
2TB1-13
301A
303A
305A
2K1
2K2
2K3
2K4
2K5
2R1
2R2
2R3
204A
205A
206A
207A
208A
209A
210A
211A
212A
215A
T1
T2
T3
T4
T5
T6
2R10
2R11
4B1
WYE DELTA STARTER
1U2A
1U2B
1U2C
1U2D
1U2E
1U1A
1U1B
1TB5-1
1TB5-2
1TB5-3
1TB5-4
1TB5-5
1TB5-6
1TB5-7
1TB5-8
1TB5-9
1TB5-10
1TB5-11
1TB5-12
1TB5-13
1TB5-14
1TB5-15
1TB5-16
1TB5-17
1TB5-18
1TB5-19
1TB2-1
1TB2-2
1TB2-3
1TB2-4
1TB2-5
1TB2-6
1TB2-7
1TB2-8
1TB2-9
2TB1-1
2TB1-2
2TB1-3
2TB1-4
2TB1-5
2TB1-6
2TB1-7
2TB1-8
2TB1-9
1TB1-1
1TB1-2
1TB1-3
1TB1-5
1TB1-7
1TB1-17
3TB1-1
3TB1-2
3TB1-3
3TB1-4
3TB1-5
3TB1-6
3TB1-7
1K1
1K2
1K3
1K4
1K5
1K6
1K7
1K8
1K9
1K16
1K17
1K18
1K19
1K20
1K21
1K22
1K23
1K24
1K25
1K26
1K27
1K28
1K29
1K30
1K31
1K32
1K33
1K34
1K35
1K36
1K37
1K38
1K39
1K40
1K41
1K42
1K43
1K44
1K45
1K46
1K47
1K48
1K49
1K50
1K51
1K52
1K53
1K54
1K55

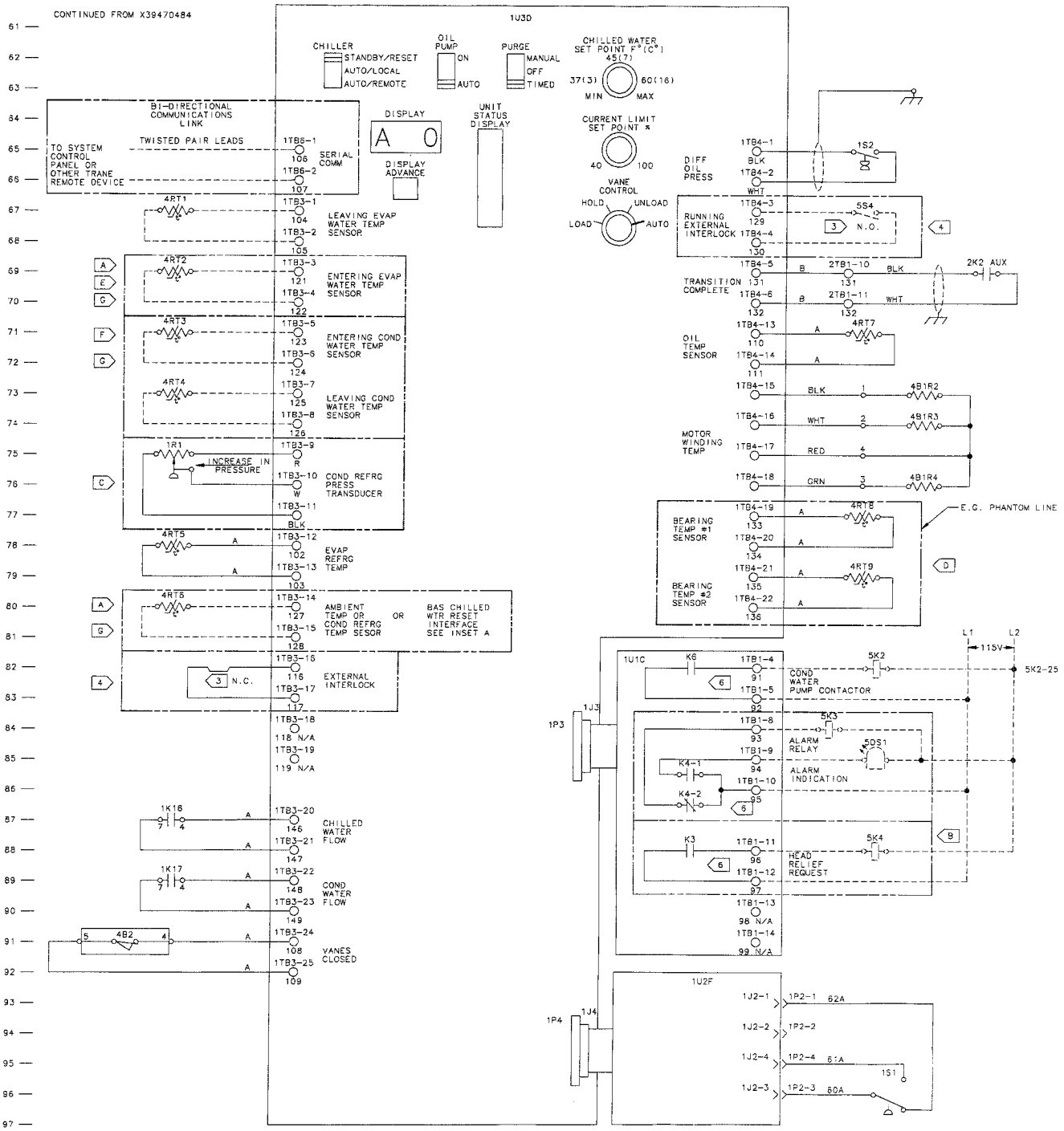

DEVICE DESIGNATION	DESCRIPTION	LINE NUMBER
	LEGEND	
1C1	CAPACITOR, OIL PUMP	32
1DL2	VENT LINE INTERVAL TIMER	32
1F1	FUSE, OIL PUMP	33
1FB2-5	BRANCH CIRCUIT FUSE	15,35 28,38
1J1-4/1P1-4	POST HEADER POWER SUPPLY	31,85,94
1K8	OIL PUMP STARTER RELAY	33
1K9	OIL TANK HTR RELAY	26
1K16	CWD WTR PUMP RELAY	24
1K17	COND WTR PUMP RELAY	25
1M1	HOUR METER	16
1M2	START METER	17
1R1	RESISTOR PRESS TRANSDUCER	75
1S1	COND. HIGH PRESS SWITCH	95
1S2	OIL PRESS SWITCH	65
1T1	POWER SUPPLY TRANSFORMER	28
1TB1	TERM BLOCK REL OUTPUT	
1TB2	TERM BLOCK POWER SPLY	
1TB3	TERM BLOCK MICRO-MOD INPUT	
1TB4	TERM BLOCK MICRO-MOD INPUT	
1TB5	TERM BLOCK CONTROL PANEL	
1TB6	TERM BLOCK MICRO-MOD INPUT	45,66
1U1A-C	RELAY OUTPUT MODULE	SHEET 2
1U1K3	HEAD RELIEF RELAY	88
1U1K4	ALARM RELAY	85
1U1K6	COND WATER PUMP RELAY	82
1U1K9	PURGE RELAY	38

1U1Q7	VANES OPEN (TRIAC)	35
1U1Q8	VANES CLOSED (TRIAC)	36
1U2A-F	POWER SUPPLY OUTPUT MOD	SHEET 2
1U2K1	RESET RELAY	18
1U2K2	STOP RELAY	16
1U2K3	OVERLOAD RELAY	16
1U2K4	COMPR.START RELAY	16
1U2K5	COMPR.TRANSITION RELAY	20
1U2K6	OIL HEATER RELAY	27
1U2K7	OIL PUMP RELAY	32
1U3A-D	MICRO MODULE	SHEET 2
1U4	BAS CHILLED WTR RESET	94
2CB1	STARTER CIRCUIT BREAKER	1,2,3
2F1,2,3	PRIMARY STARTER FUSE	3,6,11
2K1	START CONTACTOR	2
2K2	RUN CONTACTOR	22
2K3	SHORTING CONTACTOR	19
2K4	TRANSITION CONTACTOR	20
2K5	PILOT RELAY	18
2M3,4,5	VOLT METER	9,11,12
2M6,7,8	AMPMETER	49,53,57
2R1-9	TRANSITION RESISTOR	2,6,10
2R10,11	SURGE ARRESTER	1,10
2T1-3	CURRENT TRANSFORMERS	1,5,9
2T4	CONTROL POWER TRANSFORMER	14
2T5,6,7	CURRENT TRANSFORMERS	4,7,11
2TB1	CONTROL TERMINAL BLOCK	
2TB2	LINE TERMINAL BLOCK	1,2,3

3B4	PURGE MOTOR	38
3DL1	PURGE RUN DELAY TIMER	41
3K3	PURGE SWITCH RELAY	45
3L1	PURGE SOLENOID VALVE	38
3L2	PURGE BLEED VALVE	43
3M1	PURGE HOUR METER	40
3M2	PURGE CYCLE COUNTER	44
3S1	PRESS SWITCH EXTEND RUN	45
3S2	PRESS SWITCH SAFETY	36
3TB1	PURGE TERMINAL BLOCK	
4B1	COMPRESSOR MOTOR	5
4B1R2,3,4	MOTOR WINDING TEMP SENSOR	69,71,73
4B2	VANE ACTUATOR MOTOR	35
4B3	OIL PUMP MOTOR	32
4HR1	OIL TANK HEATER	27
4L1	VENT LINE SOLENOID	31
4RT1-9	THERMISTOR	69,67,70 73,77,80
5DS1	ALARM INDICATION	85
5K1	CHWD WATER PUMP CONT. AUX	N/A
5K2	COND WATER PUMP CONT. AUX	82
5K3	ALARM RELAY	84
5K4	HEAD RELIEF REQUEST CONT.	88
5S2	CHWD WATER FLOW SWITCH	24
5S3	COND WATER FLOW SWITCH	25
5S4	INTERLOCK SWITCH	47

Figure 5 (cont.)

Sequence Of Operation

Figure 6 displays a "Time-Line" sequence of operation. Description of Figure 6:

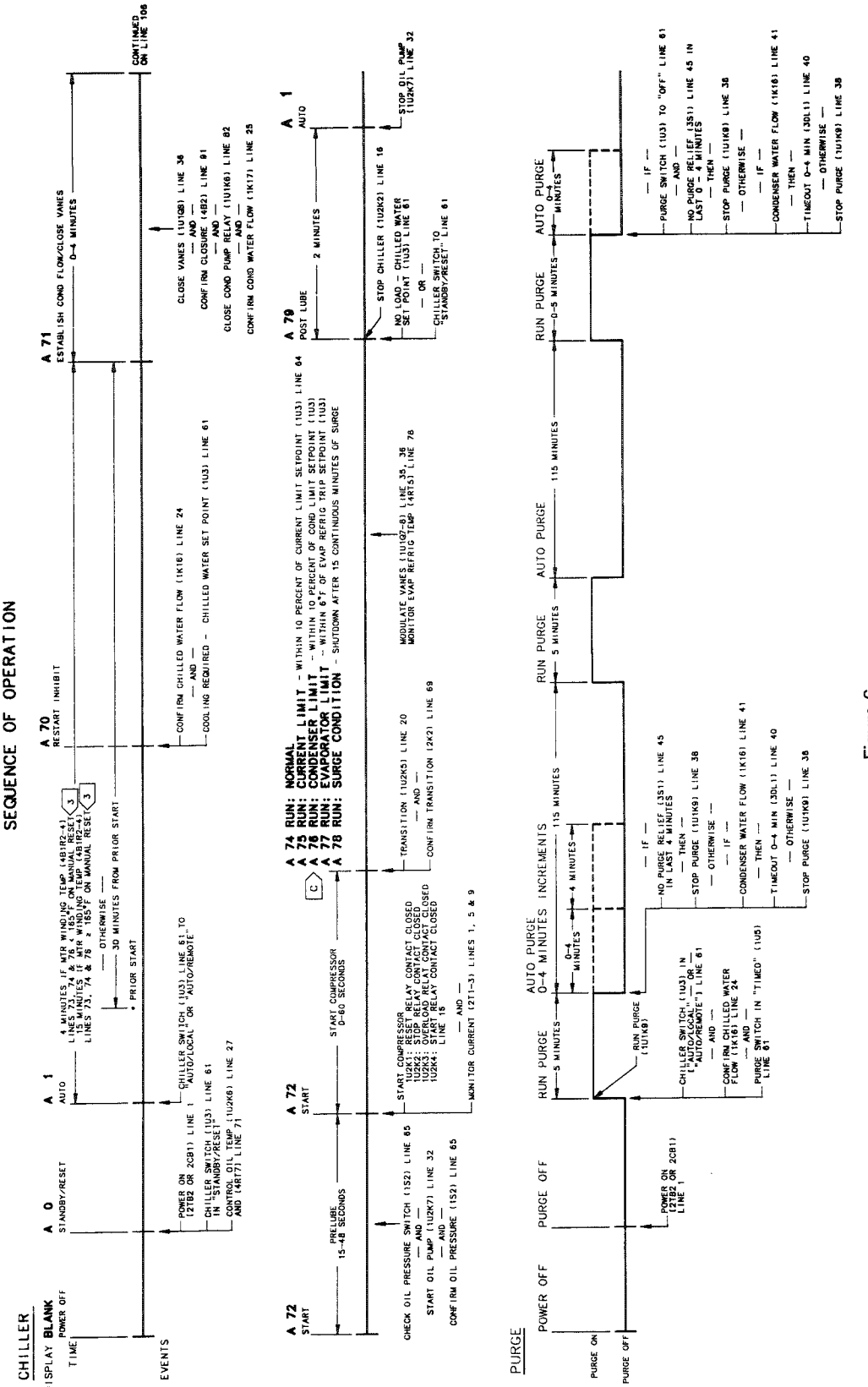

Figure 6

DISPLAY	DIAGNOSTIC	INTERPRETATION	TIME
BLANK	POWER OFF		
00	STANDBY/RESET	Power on. System is reset.	
01	AUTO	Chiller switch in auto/local or auto/remote. System is armed but cooling not required.	
70	RESTART INHIBIT	CVHE held off. Confirm chilled water flow.	Delay is: 4 min. if WT < 165F, 15 min. if WT > 165F, or 30 min. from prior start.*
71	ESTAB COND WTR FLOW	Output signal to run condenser water pump and to close inlet vanes. Confirm CDW flow and closure of inlet vanes.	Wait up to 4 min. for confirmations.
72	START	Prelube. Start oil pump motor. Confirm oil pressure.	Wait from 15 to 48 sec. to establish oil pressure.
72	START	Start compressor motor. Relays closed: (1U2K1) Reset (1U2K2) Stop (1U2K3) Overload (1U2K4) Start Monitor motor current.	Wait up to 60 sec. to accelerate motor.
74	RUN: NORMAL	Initiate compressor motor starter transition to "run". Confirm transition. Modulate inlet vanes.	
75	RUN: CURRENT LIMIT	Same as 74, plus inlet vane position limited by motor current.	
76	RUN: COND LIMIT	Same as 74, plus inlet vane position limited by approach to condenser pressure cutout setting.	
77	RUN: EVAP LIMIT	Same as 74, plus inlet vane position limited by approach to evaporator temperature cutout setting.	
78	RUN: SURGE CONDITION	Same as 74, plus head pressure relief relay energized by compressor surge condition.	
79	POST LUBE	Compressor stopped by: no load; chiller switch set to "reset" position; or (optional) free-cooling switch set to "on".	Oil pump is run 2 min. in post lube.
01	AUTO	Stop oil pump. Chiller is armed. Chiller shutdown on loss of cooling required.	

*After chiller switch is toggled to AUTO, the 70 display is skipped if the machine has been in the 01 condition, without cooling required, long enough to satisfy the timers.

CenTraVac System Control

Capacity Control

CenTraVac capacity is controlled to match chilled water system demand through repositioning the compressor inlet guide vanes. A variation in leaving chilled water temperature indicates a mismatch between chiller capacity and system load. Therefore, leaving chilled water temperature is the sensed variable for the capacity control system.

Control algorithms reside in the micro module (1U3). Any deviation from chilled water temperature set point creates a response via the condition of Triacs (1U1Q7 and 1U1Q8). The exact control response is calculated in the micro. Proportional, integral and derivative characteristics are incorporated in this controller. Consequently, the CenTraVac can be applied in a wide variety of comfort and process chilled water systems.

Control Accuracy.
Control accuracy depends, to some extent, on the "control gain" setting. This serviceman's setting (under the covered portion of the front panel) increases the speed of response as well as its sensitivity. The purpose of providing a "control gain" adjustment is to allow the chiller's response dynamics to be matched to the dynamic characteristics of the system.

Systems consisting of extremely short water loops respond quickly. They require fast response from the temperature control system. However, fast responding controls are usually more sensitive and prone to instability. There is no advantage in applying fast response controls to a system with slow dynamics. With the proper control gain setting, the CenTraVac temperature control system is designed to hold the leaving chilled water temperature within 1F of the setpoint, if the system delta-T is 15F or less. Accuracy is within 2F if the system delta-T is above 15F.

Load Limiting.
Compressor loads are determined by chilled water system conditions. Yet, compressor motor capacity is finite. Somehow, the control system must be able to limit compressor loads so as not to overload the compressor motor.

Compressor load limiting is accomplished by repositioning the inlet vanes whenever a pre-determined motor load is reached. Motor load is sensed by three current transformers located in the motor starter. If the micro senses that motor current is approaching the current limit, it will direct the inlet vanes to "hold" or "close", depending on how imminent the approach is.

The load limiting setpoint is adjusted in two ways. The primary setting (100%) is set by the service engineer. It is based on the RLA of the CenTraVac motor. The "Current Limit Setpoint %" (see "Inputs", item 6, page 3) cannot exceed 100%, but can be set to any lesser percentage, down to 40%. Since the measured variable is motor current, the percentage value refers to current. . . not motor or chiller load. (Motor current is not linearly proportional to either motor or chiller load).

Other Variables That Alter Inlet Vane Position.
Algorithms in the micro recognize other operating and safety conditions that have a bearing on vane position.

Motor Overload Current Trip. . . Separate calculations are made in the micro to evaluate the proximity to the motor overload current trip setting. As this setting is approached, inlet vane opening is inhibited. Further approach causes an "unload" command. Failing to arrest approach to the trip setting, the micro will initiate a latching diagnostic, overload trip (b Ec).

Evaporator Refrigerant Temperature. . . A temperature sensor (4RT5) in the evaporator provides information to the micro that allows it to determine an approach to the cutout temperature setting. When such an approach is discovered, inlet vanes are given a "hold" or "close" command, depending on the speed and magnitude of the approach.

Condenser Refrigerant Pressure (Optional). . . Similarly, an approach to the refrigerant pressure (as sensed by the optional pressure sensor) limit setting, will result in micro outputs that override inlet vane repositioning instructions.

Motor Protection

The compressor motor represents the costliest part of a CenTraVac. Its protection is of primary concern. Algorithms in the micro guard against the effects of the abberations listed below. Table 4 shows the diagnostic, its code and its reset mode.

Table 4

Diagnostic Description	Reset Mode	Code
Motor current overload	Manual	b Ec
Momentary power loss	Automatic	b E2
Extended power loss	Automatic	b d9
Low voltage	Automatic	b d9
Phase imbalance	Manual	b E3
Phase loss	Manual	b E4
Phase reversal	Manual	b E5
High motor temperature	Manual	b E7
Max. accelerating time	Manual	b EE
Transition	Manual	b F0

Motor Current Overload. . . 3-phase motor current is monitored continuously. An explanation of the algorithm used during motor starting appears on page 8. Shortly after the micro receives confirmation of a "compressor run" signal, running current is monitored. Any current over 107% of the setting for motor RLA will result in an overload trip. The "inverse-time" relationship above 107% RLA integrates current and time such that a steady 107% current will trip in 20 seconds. Any current exceeding 140% RLA will result in an overload trip in 1 second.

Momentary Power Loss. . . The damage potential of momentary power loss (6 to 30 cycles) is well documented. When the micro contacts 1U2K1 (reset), 1U2K2 (stop) and 1U2K3 (overload), Figure 5, are closed and the motor current falls to 15 percent of RLA, this simultaneous event can only occur when line voltage is interrupted.

Interruptions of less than 30 cycles causes an E2 diagnostic (momentary power loss), greater than 30 cycles a d9 (extended power loss). Both are non-latching (automatic reset) diagnostics.

Low voltage. . . Motors can be damaged by continuous low line voltage when the combination of motor load and low voltage results in higher than RLA current. CenTraVac motors are protected from overcurrent by the load limiting system and the overload trip.

Additionally, low voltage can produce unexpected and unpredictable operation of relay coils. The micro, by sensing control power voltage, detects this condition and issues the non-latching diagnostic (b d9), which is the same as an extended power loss.

Phase Loss or Imbalance. . . The loss or imbalance of any of the three electrical phases causes the remaining motor current to increase. Since the three phases are monitored independently, unbalanced phase currents, or zero phase currents, produce a latching diagnostic.

Phase Reversal. . . While the CenTraVac is not mechanically harmed by operation in the reverse direction, its cooling performance is grossly effected. Phase reversal is detected by the micro and results in a separate latching diagnostic.

High Motor Temperature. . . Motor stator winding resistance temperature detectors provide the micro with this information. It is used in two ways. First, a winding temperature under 165F allows a normal "start inhibit" time of 4 minutes after the chiller switch is placed in either of the "auto" positions. A winding temperature of 165F or above causes a "start inhibit" time of 15 minutes.

Second, a latching diagnostic indicating high motor temperature occurs if the detectors encounter a winding temperature of 265F.

Maximum Acceleration Time. . . Should motor starting torque not overcome accelerating torque in a specified time, the micro will issue a trip command and a latching diagnostic. This is detected by measuring the time interval between the signal to start and a reduction in motor current to less than 85% of RLA.

Transition. . . If transition from "start" to "run" is not completed within two seconds of its initiation, a trip signal and diagnostic are generated by the micro.

Control Options

The standard CenTraVac control system can be equipped with a variety of optional controls that perform specific "value-added" functions.

1. Relay Package. . . This option consists of two relays. . . an "alarm" relay and a "head relief request" relay.

Dry contacts of the alarm relay are field-connected between terminals 1TB1-9 and 1TB1-10 (normally open) or 1TB1-8 and 1TB1-10 (normally closed). The "coil" for this relay is powered by the micro through module (1U1). A customer-supplied alarm can be triggered by the alarm relay.

Designed for use with the standard surge protection feature as well as the optional condenser pressure limit control, the head relief request relay is intended to provide a signal for a reduction in entering condenser water temperature. NOTE: This relay is not intended to act as condenser water temperature controller. (Its logic contains no control algorithms which would allow it to perform as a controller). The normally-open relay is field connected between terminals 1TB1-11 and 1TB1-12.

2. Condenser Limit Control. . . This option is designed to prevent "nuisance" trip-outs of the refrigerant high pressure safety control. This option includes a manually adjustable condenser limit potentiometer (1R1), a pressure transducer and associated piping and wiring.

In an attempt to prevent a high pressure trip, this option limits inlet vane opening when the potentiometer setting is approached. If the Relay Package (above) is included, the head relief request relay may also energize to signal further corrective action (such as lowering the condenser water temperature).

3. Bearing Temperature Sensors. . . This option includes sensors 4RT8 and 4RT9 connected to 1TB4-19 & 20, and 1TB4-21 & 22, respectively. Should the motor/compressor bearing temperatures reach or exceed 180 F., the chiller is stopped with latching diagnostic bEA or bEb.

4. Chilled Water Reset. . . This option can be used on applications where design chilled water

temperature may not be needed to meet system part-load conditions. In these cases, the leaving chilled water temperature can be automatically reset upward using this option.

Reset authority tables shown in CenTraVac "Operation and Maintenance Manuals" determine the amount of temperature resetting that will occur. Two reset initiators are possible: a) return chilled water temperature, and b) ambient (outside) air temperature. (See "Generic BAS Chilled Water Reset Interface'", below.)

If return chilled water is the basis of reset, a sensor is installed in the return chilled water piping and its leads are connected to terminals 1TB3-3 & 4. The "Operation and Maintenance Manual" applicable to the specific model CenTraVac contains setup instructions to provide the appropriate amount of temperature reset for any particular application.

If ambient air temperature is used to establish the amount of chilled water temperature reset, an outside air temperature sensor is wired to terminals 1TB3-14 & 15. Care must be taken in the placement of this sensor to avoid "temperature contamination" from sunlight, radiation or atypical airstreams. Commonly, this sensor is placed in the fresh air intake to the building.

5. Generic BAS Chilled Water Reset Interface... This option is used in conjunction with the chilled water reset option. It allows the chilled water setpoint to be reset directly by an external 4-20 ma or 0-10 vdc signal. This option is most frequently used in conjunction with a generic building automation system (BAS) that has the capability of determining an appropriate chilled water setpoint by monitoring the building load requirements.

This option is provided through an additional module (1U4) that is mounted inside the control panel. Reset is only allowed upward from the front panel setpoint and the maximum amount of reset is 20 F. For additional information see the CenTraVac Operation/Maintenance manual CVHE-M-3A.

6. Serial Communications Interface... A serial communications interface option allows the microprocessor module to exchange information with a higher-level control device. A "translator", such as a Trane SCP699, must be used between the UCM and the higher-level control device, typically a TRACER automation device.

Condenser Water Control

The CVHE control system does not control condenser water temperature or flow. In application, some chillers may require some form of condenser water control. There are several to choose from, depending on the need.

Head pressure control... Chillers using an "infinite heat sink", such as a lake, river or supply of ground water, usually need this kind of control. We cannot exert much control over the temperature of natural bodies of water. Therefore, it is common to control flow in such a way as to 1) provide enough water to maintain efficient operation and, 2) limit flow so adequate condenser refrigerant pressure is provided to insure proper operation of various chiller "sub-systems", such as lubrication and motor cooling.

By sensing condenser refrigerant pressure, a simple reverse-acting proportional controller can be used to regulate the position of a water modulating valve located in the leaving condenser water line. The leaving position is used to keep the condenser "full" of water when a drain can act as a siphon. Refrigerant pressure is sensed by tapping into the

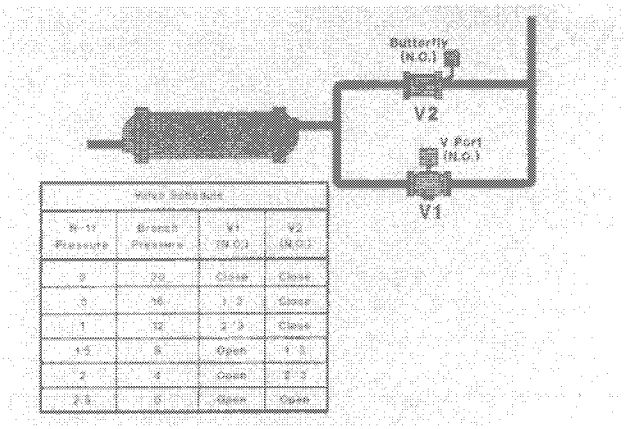

Figure 7

condenser pressure gage line, taking care to prevent the build-up of a column of liquid refrigerant that may give false pressure indications.

Modulating valve selection also depends on the application. For precision and wide flow variation, V-ported valves are best, although expensive. An alternative to a large V-ported valve can sometimes be found by using a large butterfly valve in parallel with a smaller V-ported valve, as shown in Figure 7. The total control pressure range is split sequentially between the two valves. This allows precise V-port valve control at low flows where hunting can occur, and the large capability of a butterfly valve to pass high volumes.

Application of this concept is not necessarily limited to infinte heat sinks. Head pressure control, by way of flow modulation, can also be applied

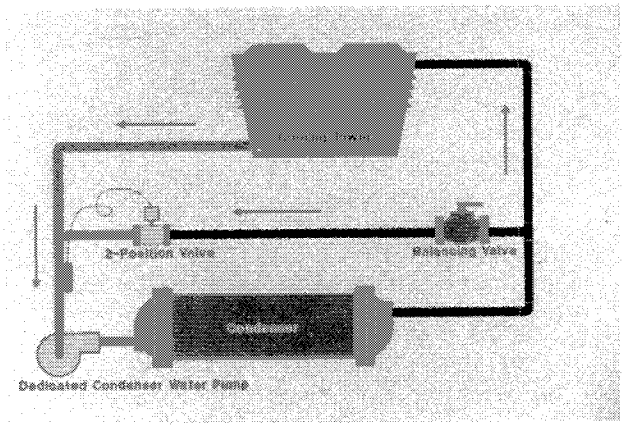

Figure 8

A simple method to assure proper condenser water temperature is shown in Figure 8. This scheme uses the "dedicated pump" concept. Water is recirculated within the condenser loop until it reaches a high limit temperature. At this point, a two-position control valve is closed, preventing recirculation. A balancing valve is used in the recirculation loop to adjust the loop pressure drop so that during recirculation, a significant amount (perhaps 50% of design flow) of tower water is drawn into the loop.

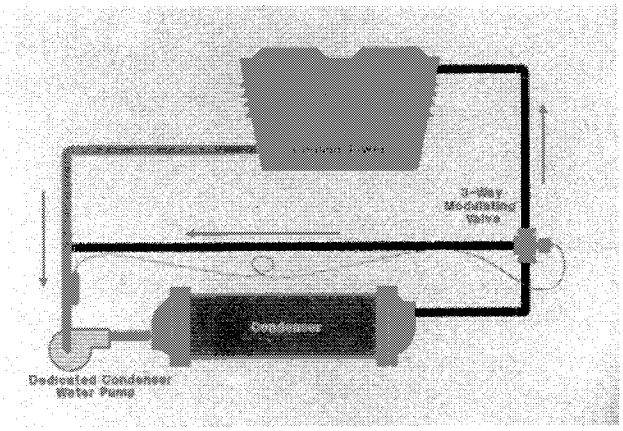

Figure 9

Figure 9 shows the next step in complication. This scheme employs a 3-way control valve to regulate the proportions of recirculated and tower water entering the condenser. The 3-way valve can take the form of two 2-way valves mechanically linked together.

When dedicated condenser water pumps are not possible, control of condenser water temperature is more complex. Depending on the size and type of cooling tower, it may be possible to control sump temperature by bypassing the entire system flow back into the sump, as shown in Figure 10.

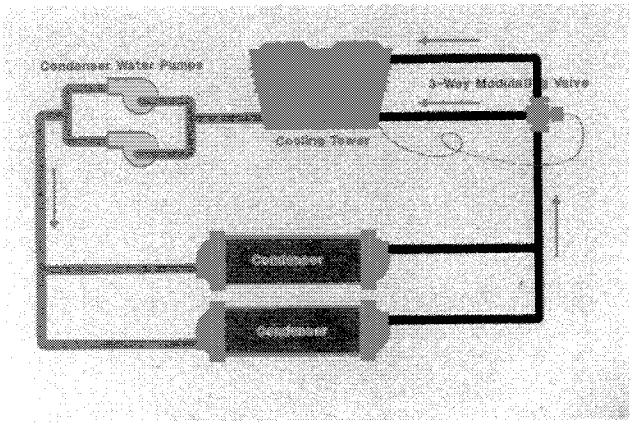

Figure 10

Some towers cannot tolerate loss of flow in cold weather. And, some systems are so large that it takes too long for such a bypass system to gain control over the water temperature.

Before adding complexity of this magnitude, the designer should evaluate the need for control. Large systems often remain active day, night, and on weekends. Heat rejected into such systems is usually sufficient to allow normal fan control to hold temperature. When a cooling tower system is very large, compared to chiller size, the condenser water system appears "infinite". The same kind of head pressure control system used for infinite sinks can be applied.

Compressor Motor Starter

The starter interlocking explanation, contained in section "System Operation", page 8, applies to star-delta, reduced voltage starters of the closed transition type. Other kinds of starters can be used, but all must be closed transition. (An open transition will be interpreted as a momentary power interruption by the micro circuitry.)

Starter types, other than star-delta, require specific internal parts and interlocking to communicate properly with the micro. In general, the following starter types can be used:

1. Star-delta, closed transition 200- 575 volts
2. Primary reactor, closed transition 2300-5000 volts
3. Primary resistor, closed transition 200- 575 volts
4. Full voltage (X-line) 200-5000 volts

Anyone contemplating the use of a starter other than star-delta, closed transition, should seek specific information about the special requirements and approval for its use.

Caution:
NEVER use shunt-trip or electrically operated circuit breakers or switch gear as replacements for CenTraVac motor starters. These devices are not inherently "fail-safe", and thus they place the compressor motor in significant and unnecessary peril.

Application

The CVHE microprocessor-based control system has been designed to serve a broad range of chilled water applications. Limitations, as applied to chilled water service are:

1. Chilled water temperature setpoint
   (min deg. F) 37 (extended range 20)
2. Chilled water temperature setpoint
   (max deg. F) 60 (extended range 70)
3. Reset — Chilled water reset cannot exceed the active setpoint range limits given in items 1 and 2 above.
   Note: Negative chilled water reset is not allowed.
4. Chilled water flow rate (min. gpm/ton) 0.8
5. Chilled water flow rate (max gpm/ton) 8.0
6. Loop water volume (min. gal./ton) 5.0
7. Loop water volume
   (max. gal./ton) infinite
8. Controller operating ambient
   (min. deg. F) 32.0
9. Controller operating ambient
   (max. deg. F) 158.0

When the chilled solution is an anti-freeze (brine) mixture, the minimum chilled water temperature setpoint is lowered to +20 deg. F.

Single Chiller Systems

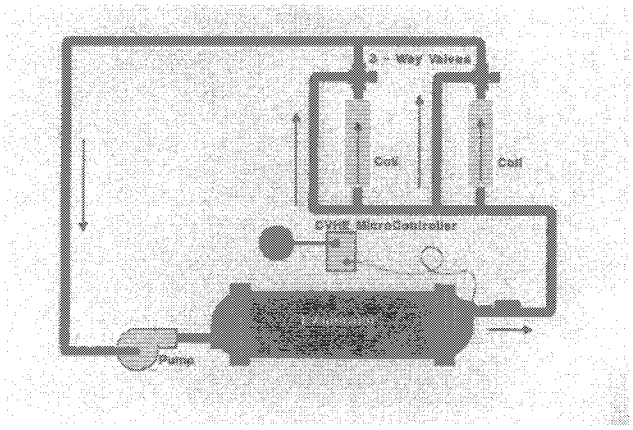

Figure 11

Basic Control. . . The basic single chiller loop is shown in Figure 11. Matching CVHE capacity with load demand is accomplished by controlling the leaving chilled water temperature at a pre-set value. When the temperature rises above this value, CVHE inlet vanes are opened past their present position. Conversely, when the observed chilled water temperature falls below the preset value, the inlet vanes are moved toward the closed position.

The only other operating signal that can influence the inlet vane position is motor current. A "load-limiting" function prevents the compressor from loading the motor beyond a preset value. This value is generally set at the maximum RLA rating of the motor. However, action of the "demand limiter" can reduce the current to any value, to a minimum of 40% of the load limit setting.

Two safety signals can limit inlet vane position, as well. They are, 1) the low refrigerant temperature limit and 2) the high condenser pressure limit. As either of these limits is approached, inlet vanes are moved toward the closed position.

Control Accuracy. . . The controller algorithms contain routines that provide an inherent accuracy of plus or minus 0.5 F. However, a combination of chilled water loop size and stability may prevent this accuracy from being achieved. In other words, loads can change so rapidly that the controller cannot sense temperature changes quickly enough, or the inlet vanes cannot move to a new position quickly enough to maintain this accuracy. Realistically, we can expect to hold the leaving chilled water temperature within 1 deg. F, if the system delta-T is 15 deg. F or less, and within 2 deg. F if the delta-T is above 15 deg. F.

System size and response characteristics vary widely. Thus, the CVHE control system is provided with a control input named "control response". This control adjusts the "response gain" to accomodate varying system characteristics. This control should be adjusted only by a qualified service engineer, since improper adjustment can lead to "hunting" or other unwelcome peculiarities.

The start/stop differential can be set manually to lengthen or shorten cycle times between starts. The "differential to start" control measures the difference between the actual chilled water temperature and the chilled water setpoint. A minimum difference turns the chiller off. This event occurs when minimum chiller capacity exceeds load demand long enough for the entire loop to fall to this value.

Likewise, when the chiller is off, a rise in the system water temperature to the other end of the differential setting will cause the chiller to restart. Cycle times are lengthened by using a large differential and vice-versa. Small chilled water loops generally require a large differential setting to limit cycling.

Variable Flow. . . Controller algorithms permit application of the CVHE CenTraVac to variable chilled water flow schemes, so long as they meet each of the following criteria:

1. Minimum and maximum flows within the cataloged limits for the specific evaporator size.

2. Changes in flow rate do not exceed a rate of 2% of design flow/minute. For example, a maximum change rate of 20 gpm/minute for a nominal 1000 gpm system.

Process Chilled Water Systems. . . In general, load changes associated with air conditioning applications occur slowly and predictably. The application of CenTraVacs to process chilled water loads opens up the possibility of:

1. Loads that come and go quickly and without warning.

2. Loads that require extremely precise temperature control.

3. Loads that return "used" chilled water to the chiller at temperatures well above the maximum safe return water temperature.

4. Loads that require a supply water temperature well above the maximum permitted.

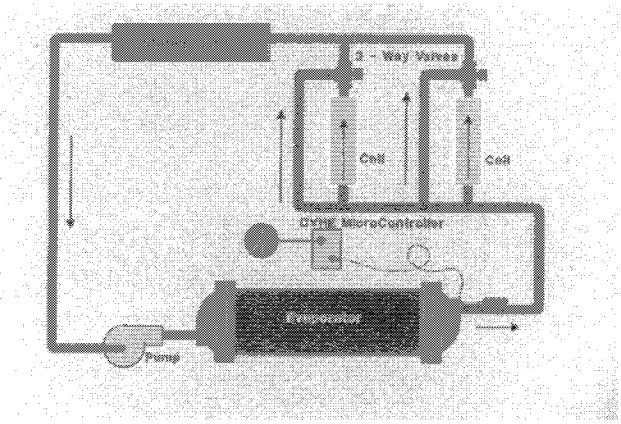

Figure 12

Figure 12. Suddenly appearing or disappearing loads, in themselves, may not be a problem. However, when temperature stability limitations accompany them, a "thermal flywheel' of some sort may be required. Many designers feel a storage tank is the answer. Possibly so. But, in many cases a storage tank does nothing but delay the problem of sudden load changes. In effect, the tank becomes a longer chilled water supply or return pipe. The magnitude of the temperature upset is not changed. Instead, it's appearance at the chiller is simply delayed.

Application

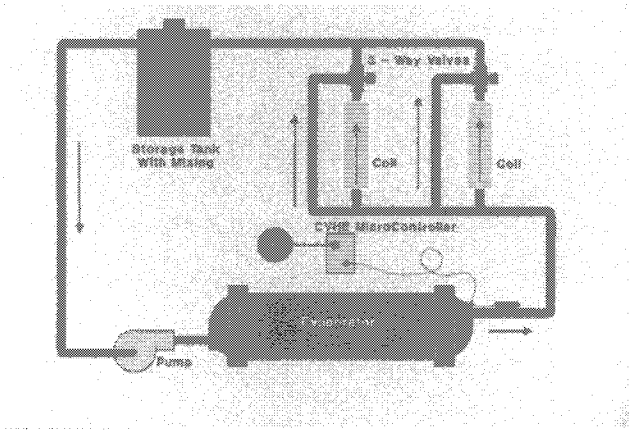

Figure 13

To achieve a flywheel effect, the tank must be a mixing chamber. In this way, water returning to the chiller is allowed to assume a "floating average" temperature before exiting the tank, Figure 13.

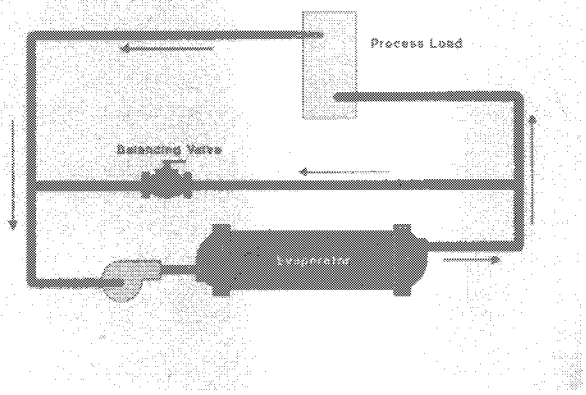

Figure 14

Figure 14. To prevent excessively warm water from returning to the chiller, a separate bypass loop must be established. A single circulating pump can be used if the chiller flow rate always exceeds the process demand. Surplus flow is sent through the bypass line into the return and mixed with return process water. If load changes are sudden, the return "tee" actually becomes a mixing tank, as shown in Figure 15.

Figure 16. When the process loads operate at supply and return temperatures above those allowed in the chiller, two circulating pumps are required. Two loops (process and chiller) are interconnected by bypass piping. Flow in the process bypass pipe is controlled by a temperature controller set at the desired process supply value.

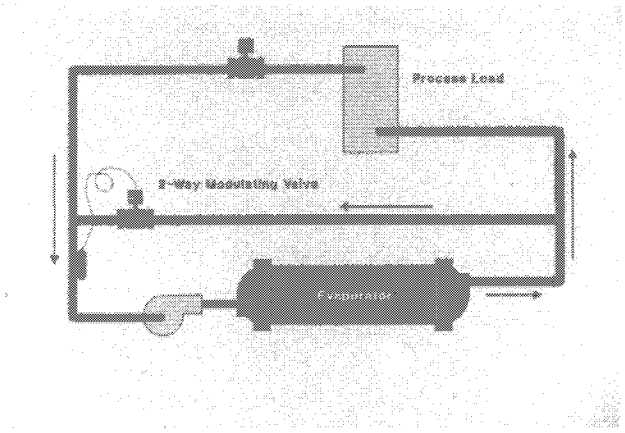

Figure 15

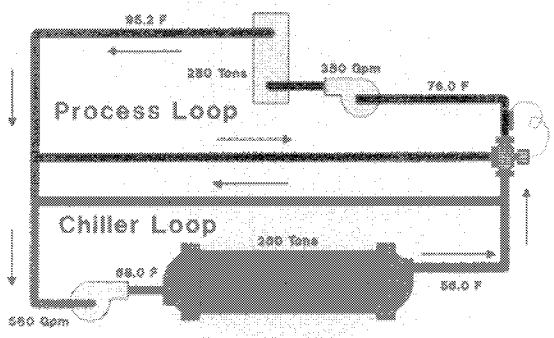

Figure 16

Flow in the chiller bypass line, then, automatically assumes the balanced rate. Temperature mixing equations are used to calculate the various design flow rates, and the controller does the rest.

Example: Assume a maximum process load demand of 280 tons, cooling 350 gpm from 95.2F to 76.0F. Also, assume a chiller is selected to provide 280 tons, cooling 560 gpm from 68.0 to 56.0F.

If "X" is the flow in the interconnecting link piping,the mixing equation is: 56.0X + 95.2(350-X) = 76.0(350), or 56.0X-95.2X = 26600-33320, or X = 171.43

Therefore, the design load flow rate in the process bypass line is 350 - 171.43, or 178.57 gpm. Likewise, the flow in the chiller bypass line is 560 - 171.43, or 388.57 gpm.

Multiple Chiller Systems

Certain kinds of multiple chiller systems involve "integrated" control strategies. That is, a higher level control authority instructs unit-level controllers in a predetermined way to act as a complete system.

Other multiple chiller systems are put together in such a way as to allow individual chillers to act independently. No higher level authority is required to coordinate the control of individual chillers. An example of one such system is shown in Figure 17.

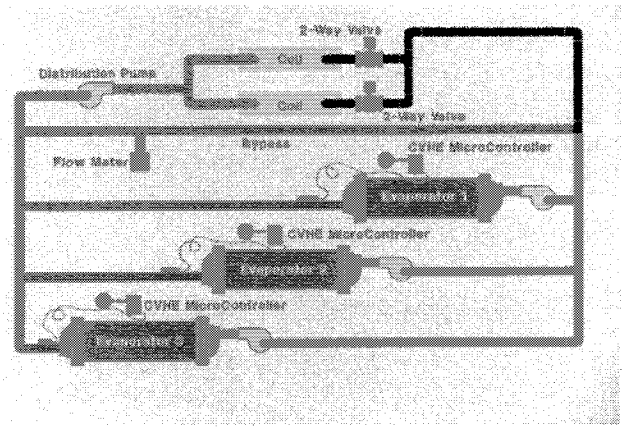

Figure 17

The primary/secondary pumping arrangement is used commonly to handle multiple chiller systems. This particular hydraulic combination decouples the distribution circulation from the production part of the system. In operation, a simple flow measuring controller decides how many chiller/pump "production units" are needed. Once this decision is made, the CVHE unit-level controller accepts all responsibility for temperature control.

Chilled water temperature control is separate from system control. Thus, any number of independent chilled water temperature controllers can operate on the same system. While it makes sense to have all such controllers set at the same setpoint, there is nothing to prevent different setpoints. However, different setpoints cause varying system supply water temperatures as different chillers are brought on line.

The common return water temperature establishes individual chiller demands for capacity. Since the return temperature is the same for all operating chillers, they share total system load in proportion to their pump's flow rate. "Preferential" loading is possible only by rearranging the hydraulics, as shown in Figure 18. When the common bypass (decoupler line) is placed "outside" a production

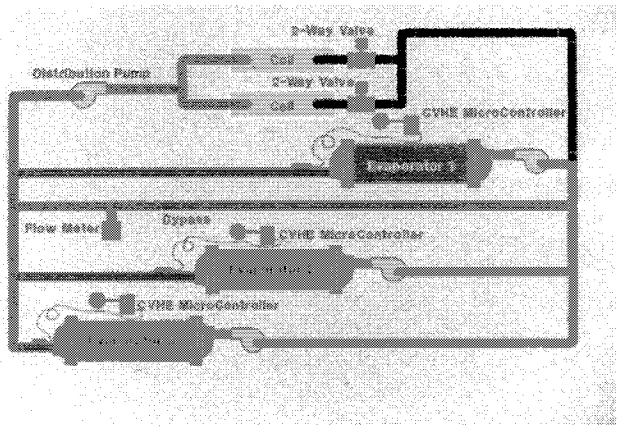

Figure 18

chiller/pump "production unit", that unit can be preferentially loaded. This occurs because its return water temperature is not diluted (decreased) by water flowing through the bypass from the supply main.

Series flow chillers. . . When evaporators are piped in series, Figure 19, it is possible to control the chillers separately and independently. The chilled water control set points are based on:

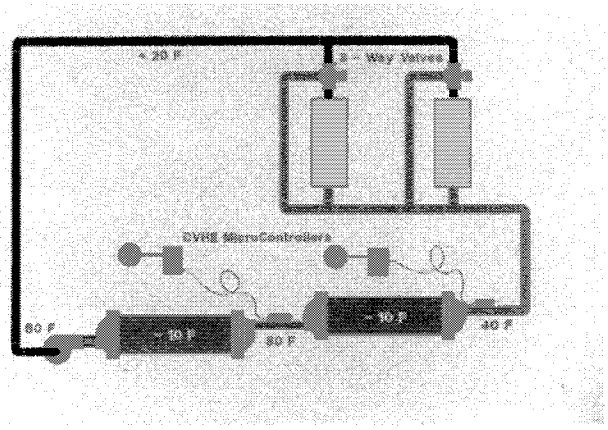

Figure 19

1. Setting both chillers to the system design water temperature. This method loads the upstream chiller first in sequence.

2. Setting only the downstream chiller at the system design water temperature. By setting the upstream chiller at the design intermediate temperature, it will be sequencially loaded last.

Application

Heat Recovery

CVHE chillers applied as heat recovery machines present unique control challenges. The basic water chiller control system does not recognize heat recovery control as being different from conventional chilled water control. To apply CVHE CenTraVacs to heat recovery service, a basic control strategy must be selected. There are several to choose from:

1. Auxiliary Heat Recovery. . . Figure 20. Control of CVHE inlet vanes remains with the leaving chilled water temperature controller. One method to establish a suitable heat recovery temperature level is to use the same kind of condenser head pressure control described in the "Condenser Water Control" section, page 16. This heat recovery system is characterized by its inability to absorb all of the heat rejected by the refrigeration system. Therefore, the main heat sink must be capable of accepting all rejected heat at any time.

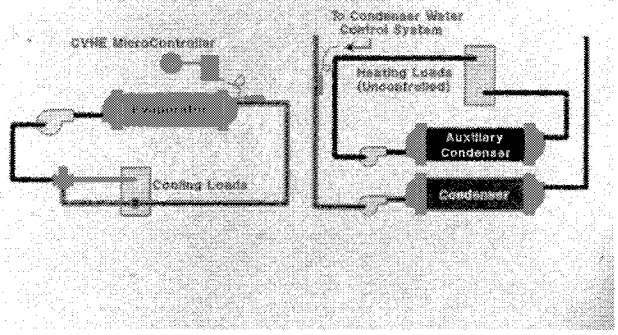

Figure 20

Head pressure control permits this while maintaining a condensing pressure (and temperature) high enough for auxiliary heat recovery.

2. Controlled Heat Recovery. . . Figure 21. When the heat recovery circuit is capable of absorbing all rejected heat during this mode of operation, the temperature of the returning hot water is used to control the amount of heat (usually by water flow) directed to the cooling tower water circuit. This also leaves inlet vane control completely under the control of the leaving chilled water controller. The basic CVHE control system is unaffected.

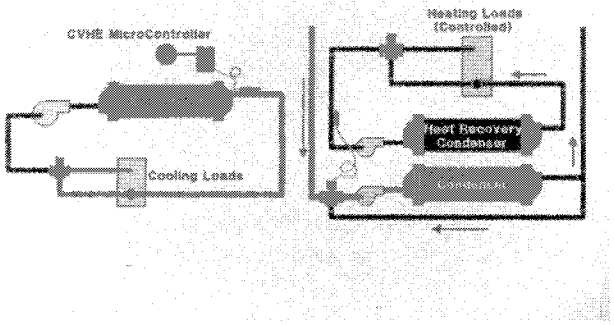

Figure 21

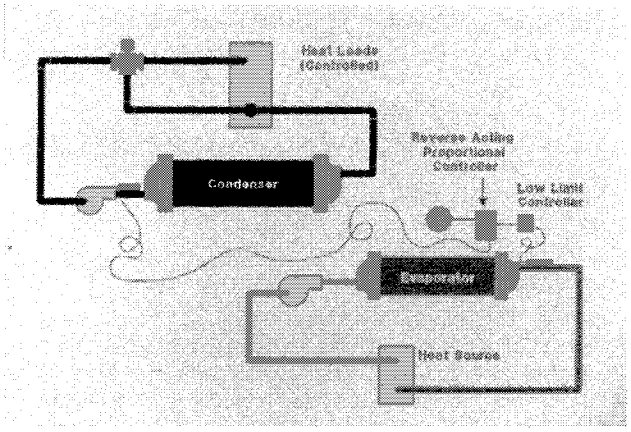

Figure 22

3. Heating As Primary Mission. . . Figure 22. In this case, the importance of heating transcends that of chilling water. The CenTraVac becomes primarily a heating device. This kind of system is used when the heat source, rather than the sink, is infinite. There is no possibility of running low on either chilled water flow or temperature. Control of the inlet vanes is taken away from the leaving chilled water controller and given to a heating water temperature controller.

For information pertaining to converting the CVHE controls for heating priority, refer to Trane Engineering Bulletin CTV-EB-91.

Interfacing With Other Control Systems

While the CVHE control system is microcomputer-based, its language and protocol are not common to control systems marketed by other control manufacturers. Therefore, it is not possible to simply tie a pair of wires into the micro with the hope of passing information and data back and forth.

Instead, a "translator" is needed. This function is filled by a system control panel, model SCP 699. In general, all remote interfaces, except the following listed ones, require an optional SCI (serial communications interface) and a Trane SCP 699 system control panel.

On-Off. . . Remote control of the on-off (start/stop) function can be executed through the optional "translator" panel SCP 699. If this is the only remote function that is desired, a less costly, but less friendly interface is possible. One way to accomplish it is to break into the chilled water interlock circuit. The circuit is identified by terminal pairs 1 TB5-15/17, Figure 5 line 24. This is less friendly because an interruption of the circuit causes a non- latching diagnostic. While the message indicates flow interruption, the operator can never be sure whether a flow failure has actually occurred or the unit is being turned off by the remote device.

Alarms. . . Remote alarm systems can be connected to the (optional) relay package (1U1, Figure 5). A customer-supplied, self powered alarm device can be activated by this pair of dry contacts, either normally closed or normally open. Any of the several CenTraVac alarm sequences will cause a signal to change contact position. Since there is a single alarm point, this circuit will not give an indication of the specific alarm condition.

A second alarm relay contact pair (head relief request relay) is included in the optional relay package. This relay is activated whenever the standard surge protection feature detects compressor surge. A request for condenser head relief can be used to remotely 1) reset existing condenser water temperature controls, 2) activate additional supplies of condenser water, or 3) signal any other remote and existing apparatus that will lower the condenser refrigerant pressure. This contact pair cannot be used as a controller output because it is not driven by control algorithms.

Hot Gas Bypass

The purpose of compressor discharge hot gas bypass is to false load the compressor with sufficient gas volume so as to maintain stability. Basic CVHE compressor stability is unusually high due to the three-stage design and the use of pre-rotation inlet vanes ahead of each stage. The inlet vanes ahead of the first and third stages are positioned by the temperature control system.

This permits the CenTraVac to be applied to systems that require aggressive turn-down ratios. Rule of thumb, CenTraVacs will operate with high stability at loads as small as 10% of the chiller's maximum capacity. In many cases, stable operation can be expected at even lower loads (sometimes on only system pipe gains).

On rare occasions hot gas bypass is necessary to false load a compressor to achieve a high pressure ratio at low "real" loads. Or, the start/stop cycling that occurs at loads below minimum loading may be unacceptable. In either event, control over hot gas bypass is executed by four devices contained in an optional hot gas bypass kit:

1. Hot gas bypass relay (1K15). Allows the inlet vanes and the hot gas bypass valve to close on chiller shutdown.

2. Inlet vane end switch (4S4). Permits adjustment of the activation point for the hot gas bypass, depending on inlet vane position.

3. Hot gas bypass valve switch (4B5). Directs "vanes close" or "vanes open" signals to the inlet vanes or to the hot gas bypass valve, depending on the relative position of each.

4. Discharge temperature switch (4S5). Shuts down the chiller if the compressor discharge temperature exceeds 210 deg. F., which may be caused by excessive no-load operation.

The hot gas bypass valve option should not be applied to a chiller indiscriminantly. It is not a cure-all for poor system design.

Free Cooling

The CenTraVac free-cooling option consists of five additional items:

1. Refrigerant gas line to bypass the compressor, including electrically actuated two-position valve.

2. Refrigerant liquid return line from condenser to evaporator, including electrically actuated two-position valve.

3. Liquid refrigerant storage vessel (actually, an extension to the existing economizer vessel).

4. Additional refrigerant charge to provide added wetted evaporator tube surface.

5. Free-cooling selector switch.

Application

When a CenTraVac operates on the free cooling cycle, temperature control is lost. The chiller simply becomes a pair of heat exchangers that permit heat from the chilled water loop to be rejected into the cooling tower circuit. The balance between the chilled water load and available condenser water temperature will produce an equilibrium condition at some leaving chilled water temperature.

This will likely not be the design system chilled water temperature. So long as it meets the needs of the system, however, free cooling is appropriate. When the derived chilled water supply temperature no longer satisfies system needs, it is time to switch the system over to "powered" cooling. This change-over is executed manually.

Since the condenser water temperature, at the time of change over, is likely to be low, some form of condenser water control is desirable (if not mandatory). The various options are listed in the "Condenser Water Control" section, page 16.

Low Temperature (Brine Chilling)

Model CVHE CenTraVacs may be applied as low temperature brine chillers.

Chiller modifications are limited to the control systems and various safety cutout settings. In other respects, the CenTraVac is essentially the same as a conventional water chiller.

Systems of this type often require two chilled water temperature control setpoints. One is used for ice-building and the other for conventional operation. To perform this change, a remote setpoint adjustment should be used. As indicated in the "Interfacing with Other Control Systems" section, page 23, the serial communications interface and the SCP 699 interface panel must be used to perform remote setpoint changes.

Appendix

The following describes the "Last Diagnostic" codes (Prefix b) displayed when an abnormal CenTraVac shutdown occurs.

Unit Diagnostics Condition

Code	*Description*
A3	Evap. Refrig. Temp. Range
A4	Motor Temp. Sensor #1
A5	Max. Accel. Time Range
A7	Motor Temp. Sensor #2
A8	Motor Temp. Sensor #3
A9	Oil Temp. Sensor
Ab	Leaving Water Temp. Sensor
Ac	Cond. Refrig. Pressure Sensor (Opt.)
Ad	Evap. Refrig. Temp. Sensor
AE	Ambient Temp. Sensor (Opt.)
AF	Bearing Temp. Sensor #1 (Opt.)
bO	Bearing Temp. Sensor #2 (Opt.)
d9	Extended Power Loss
dA	Surge
dc	Cond. Water Flow Overdue
dE	Cond. Pressure Start Inhibit
E2	Momentary Power Loss
E3	Phase Imbalance
E4	Phase Loss

Code	*Description*
E5	Phase Reversal
E7	High Motor Temp.
E8	Differential Oil Pressure Switch
E9	Stop Relay
EA	High Bearing Temp.(Sensor #1)
Eb	High Bearing Temp. (Sensor #2)
Ec	Running Overload
Ed	Chilled Water Flow
EE	Exceeded Max. Accel. Time
FO	Transition
F1	Running Ext. Interlock (Opt.)
F2	Low Oil Pressure
F4	High Oil Temp.
F5	High Cond. Refrig. Pressure
F7	Cond. Water Flow
F8	Improper Unit I.D.
F9	Free-Cool. Valves
FA	Actuator
Fb	Low Evap. Refrig. Temp.
Fd	External Interlock (Opt.)
FF	Unit Control Module

Index

Alarms 15
Application 18
Auxiliary Heat Recovery 22
Bearing Temperature Sensors 16
Capacity Control 14
Chilled Water Flow 3
Chilled Water Reset 16
Chilled Water Setpoint 3
Chiller Switch 2
Compressor Motor Starter 17
Condenser High Pressure Switch 5
Condenser Limit Control 15
Condenser Pressure 5
Condenser Water Control 16
Control Accuracy 19
Control Options 15
Control Power Transformer 5
Controlled Heat Recovery 22
Cooling Required 3
Current Limit Setpoint 3
Diagnostic Codes 4
Differential (oil) Pressure Switch 5
Evaporator Pressure 5
Free Cooling 23
Hardware 2
Head Pressure Control 16
Heat Recovery 22
Heating As Primary Mission 22
High Motor Temperature 15
High Oil Pressure 4
Hot Gas Bypass 23
Hour Meter 5
Inputs 2
Interfacing With Other Control Systems 23
Load Limiting 14
Loading 3
Low Oil Pressure 4
Low Temperature (Brine Chilling) 24
Low Voltage 15
Manual Reset Required 14
Maximum Acceleration Time 15
Micro Module 6
Momentary Power Loss 15
Motor Current Overload 15
Motor Overload Current Trip 14
Motor Protection 14
Multiple Chiller Systems 21
Non-UCM Devices 5
Oil Pump Capacitor 5
Oil Pump Fuse 5
Oil Pump Switch 2
Operating Mode 4
Output Relays 6
Outputs. . . Display 4
Outputs. . . Gages And Meters 4
Outputs. . . Status Lights 3
Phase Loss or Imbalance 15
Phase Reversal 15
Power Supply 6
Power Supply/Output Module 6
Process Chilled Water Systems 19
Purge Switch 2
Purpose 1
Relay Package 15
Relay/Output Module 6
Remote Chilled Water Setpoint 3
Remote Current Limit Setpoint 4
Running 3
Sequence Of Operation 12
Serial Communications Interface 16
Single Chiller Systems 18
Start Meter 5
Starting Sequence 8
Stopping the Compressor 8
System Operation 8
The Start/Stop Differential 9
Transition 15
UCM 6
Unloading 3
Vane Control Switch 3
Variable Flow 19
Water Temperature Control 16

TRANE

Applications Engineering Manual

CenTraVac® Water Chilling Systems

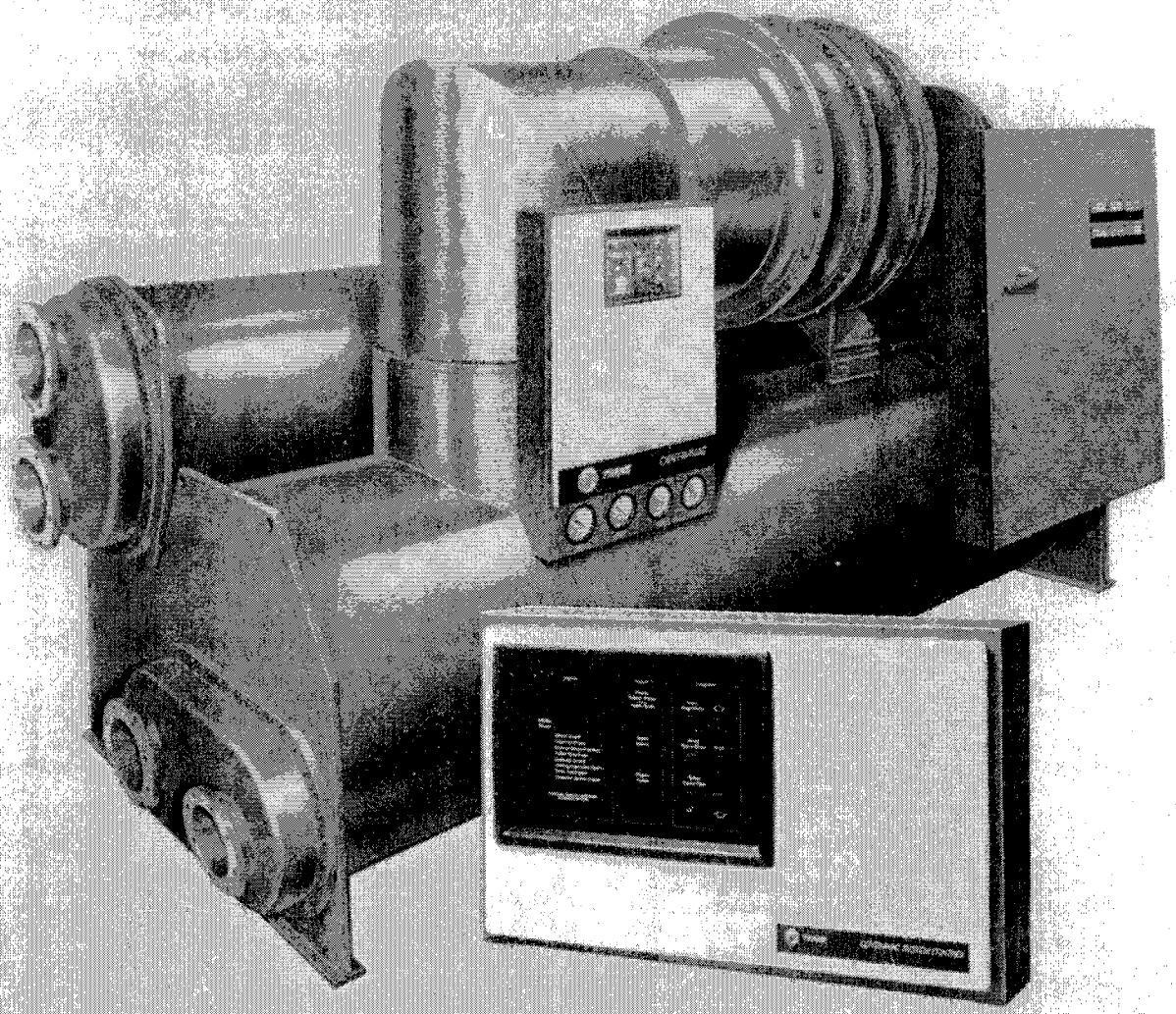

CenTraVac®
Integrated Comfort™
Systems

©American Standard Inc. 1987

Contents

Part I

System description 2
Remote Chilled Water Reset Module 3
System Control Panel (SCP699) 4
User Interface 5
Coordinated Control And Sequencing Of Multiple Chillers 5
System Temperature Control 6
Scheduling 6
Cooldown 6
Reset 6
Demand Limiting 8
Centralized Manual Control 8
Condenser Water Temperature 9
Free Cooling Control 9
Generic Building Automation System (BAS) 10
Tracer-100 Building Management Controller 10
Tracer-1000 Building Management System 11

Part II

How To Design The System 12
Qualify The Application 12
Establish A Clear Expression Of Your Goal(s) 12
Determine Which Goals Can Be Accomplished 12
Establish The Method You Will Use To Accomplish Each Goal 12
How To Put The Parts Together 12
Reset Chilled Water Supply Temperature 13
Remote System Start/Stop Time Clock 13
Alarms 14
Reset Chiller(s) Electrical Demand 14
Remote Monitoring 15
Coordinate Control Of Multiple Chillers 15
Ice Storage System Control 19
Fail Safe Communications 20
Convert Existing Chiller(s) To Permit Coordination With New Chiller 20
Control, Or Monitor, Chillers From Non-Trane BAS 21

Introduction

This applications Manual discusses an Integrated Comfort System that combines Model CVHE and CVHB CenTraVacs (using a micro-based control panel UCP695) with other parts of an air conditioning system through a Tracer Building Management controller.

The intent of this manual is to aid the designer of chilled water systems that employ CenTraVacs. It is organized to describe the system features, present system design guidelines, and outline application potentials.

This manual is partitioned into ***Part I*** and ***Part II***. Part I describes the systems and the hardware in these systems. Definitions and basic capabilities are covered. Part II focuses on applications and the techniques that can be used to achieve specific results.

PART I

System Description

Simplicity is the key word that describes the Trane Integrated Comfort System concept. In general, individual system components, such as chillers, pumps, cooling towers, fans, coils and valves are designed normally. The basic control strategy is also unchanged. The new ingredients are the control devices, their location and the algorithms that run them.

With the Trane ICS, individual controllers are part of the equipment. For example, the chilled water temperature controller is a part of the CenTraVac. (It is more than a controller, but we'll get back to that later). Alone, this controller is fully capable of executing any of several chiller control strategies. It needs no higher level of control authority in order to function properly.

This controller is built into the CenTraVac at the factory. Every CenTraVac is factory-equipped with an identical micro-based control panel. It's primary functions are to control the supply chilled water temperature and to protect the CenTraVac from conditions which might cause harm or damage to the system, equipment or people. Thus, all controls are categorized as either ***operating*** or ***safety*** controls. In general, safety controls are fixed into the hardware, while operating controls can be altered. In the language of microelectronics, safety controls are "hard-coded" into the micro-chips. Their values cannot be altered without changing the chips. Most operating controls, on the other hand, can be changed by changing software. Their values can be changed at will.

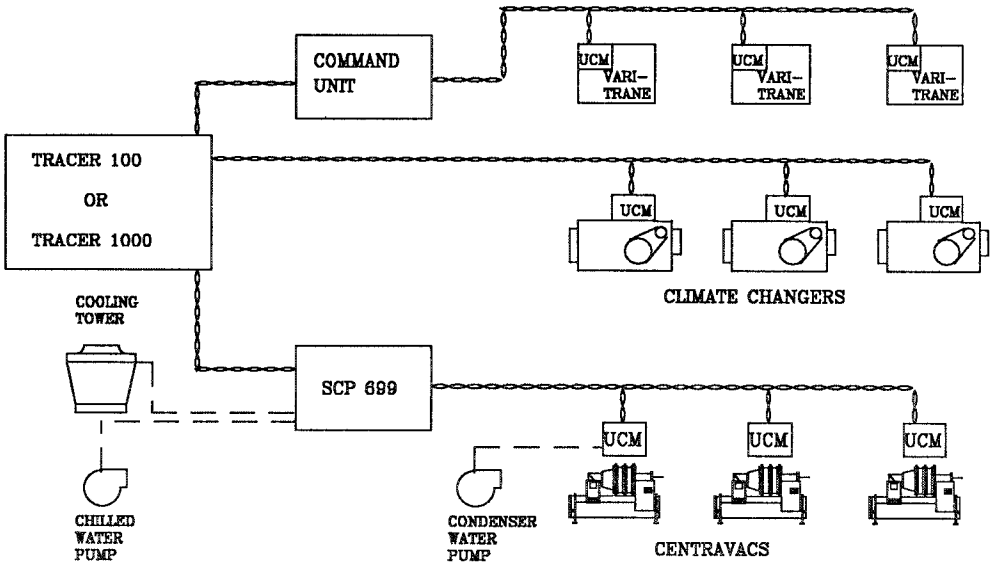

Figure 1

Changes to the various control values can be made manually (on-site) by programming, or remotely through an electronic interface. The latter is the technique used by the Trane Integrated Comfort System (Figure 1). The algorithms used to change operating values may reside in any of several places:

1. Trane Remote Chilled Water Temperature Reset Module (Figure 2).

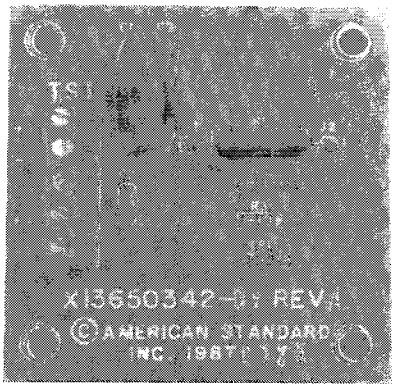

Figure 2

2. Optional "System Control Panel", Model SCP699 (Figure 3), or

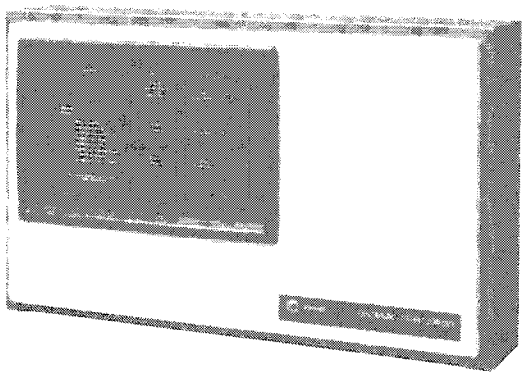

Figure 3

3. Tracer-100 (or Tracer-1000) Building Management Controller (Figure 4), or

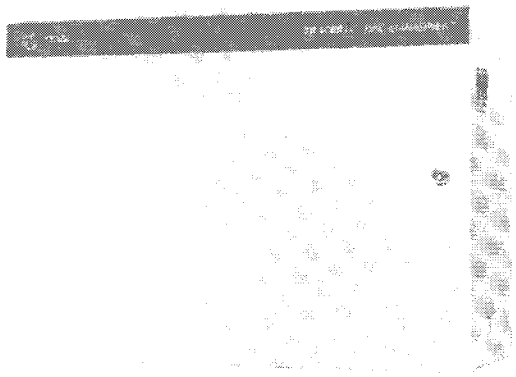

Figure 4

4. Generic BAS Interface through SCP699 (Figure 5).

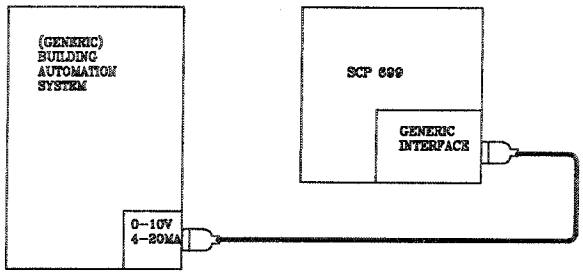

Figure 5

The capabilities and actions of these four "higher level of authority" devices are quite different from each other. Thus, they are described separately.

Remote Chilled Water Reset Module

The module identified as Trane part number B4533-2379-01 is a definite-purpose remote chilled water resetting interface. This device permits any remote 4-20 milliamp or 0-10 v.d.c. signal to reset the CenTraVac's supply chilled water temperature setpoint.

Connections are made directly to the CenTraVac panel, module 1U4. Communication is by way of a polarized pair of unshielded low voltage wires.

Chart 1 displays the possible reset relationships. In order to have this module perform its resetting function, four adjustments must be made to the CenTraVac panel 1U3D module:

- Set the "CHILLER" switch to "AUTO-REMOTE"
- Set "RESET TYPE" to "REMOTE TEMP."
- Set "RESET ACTION" to position "A, B, C, or D"
- Set "RESET REFERENCE" to position "A"

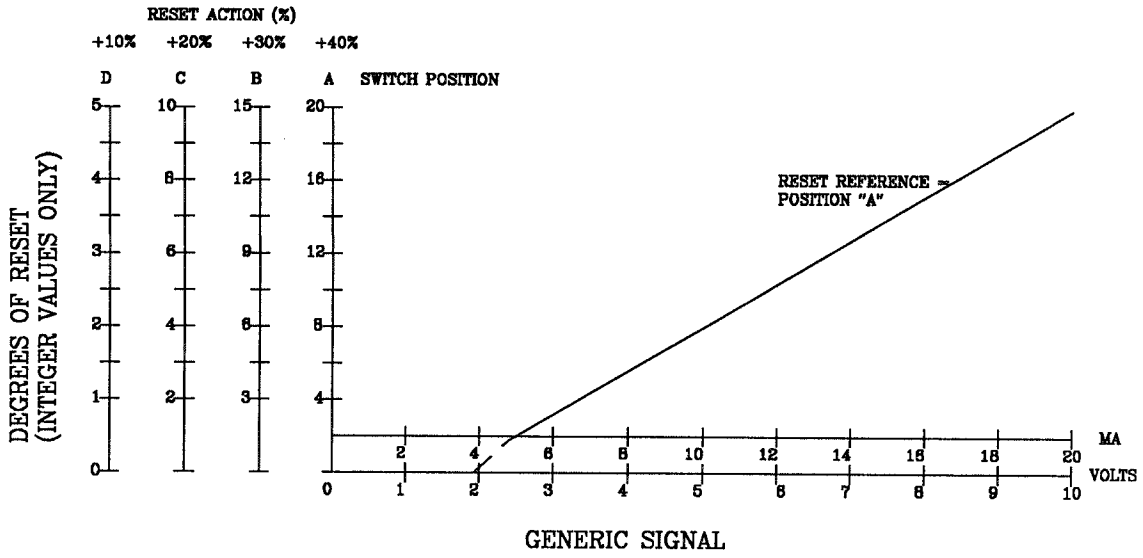

NEW CHILLED WATER SETPOINT =
(PANEL SETPOINT) + (DEGREES OF RESET)

Chart 1

As shown in Chart 1, there are two reset ranges. The first range, up to 2.4 v. or 4.8 ma., permits a maximum of only 1.8 F of reset action. The second range is more useful. It permits resetting the temperature up 20 F. Logic within the CenTra-Vac panel prevents negative resetting.

System Control Panel (SCP699)

Note: For further detailed information on the SCP699 panel, refer to CVMA-IN-1 (Installation), and to CVMA-OG-1 (Operator's Guide).

The Trane SCP699 system is capable of a wide variety of strategies and options. Some of these are mutually exclusive...some are not. Table 1 shows the various features and capabilities of the SCP699, when used alone, as a multiple chiller control panel.

Table 1

1. User interface.
   The "user interface" gives the operator access to data available within the chiller system. This includes all data normally available through the CenTra-Vac UCP695 panel.

2. Coordinated control.
   1, 2, or 3 CenTraVac chillers with and sequencing UCP695 control panels. Chillers can be piped either 2 or 3 in parallel chillers, or 2 in series.

3. System temperature.
   A common supply water temperature is maintained by regulating individual chiller capacities.

4. Scheduling.
   System operation is scheduled on a 7-day, 24-hour basis, plus holiday scheduling.

5. Cooldown.
   Variable rate "soft-loading;" of chillers minimizes electrical demand peaks.

6. Reset.
   System chilled water temperature reset is executed manually or automatically.

7. Demand limiting.
   System electrical demand limit control is executed based on pulsed signals received from a system electrical demand meter.

8. Centralized manual control. Specific parameters are controlled from a central location (SCP699).

9. Auxiliary components control. Control of major auxiliary chiller system components, such as chilled water pumps.

10. Condenser water temperature. Optional 2-stage *limit control* of cooling tower water temperature permits a variety of special strategies.

11. Free Cooling control. Optional temperature-initiated free-cooling control permits automatic enable/disable commands.

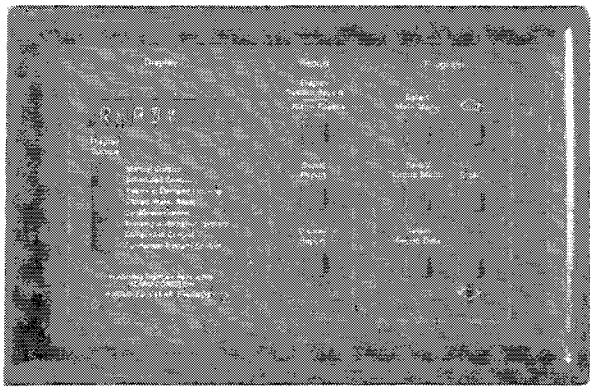

Figure 6

1. User Interface

An 8-character alpha-numeric display, 8 status indicator lights and 9 pushbutton switches comprise the interface section (Figure 6). Three primary groups make up this interface: the *display*, *report*, and *program* groups.

The *display* group indicates to the operator various messages and status information.

The *report* group enables the operator to view as many as 5 preformatted status reports (4 system reports and 1 chiller report).

Programming is performed in two areas; **SYSTEM** and **CHILLER**. Major **system** programming areas are:

- Time scheduling,
- Chilled water setpoint, reset, and control gain strategies,
- Electrical demand limiting setpoint and rate,
- Cooldown (slow-load) strategy, and
- Free-cooling enable/disable temperatures

Major individual **chiller** programming areas are:

- Leaving chilled water temperature setpoint,
- Electrical current limit setpoint,
- Order of rotation for chiller start sequence , and
- Percent chiller capacity to be used as a "trigger" to advance chiller sequence.

2. Coordinated Control and Sequencing of Multiple Chillers

Coordinated control and sequencing is accomplished through programming the "**CHILLER**" portion of the **main menu** (Figure 7). Three unit inputs and the unit sequence inputs are revealed in the **group menu**.

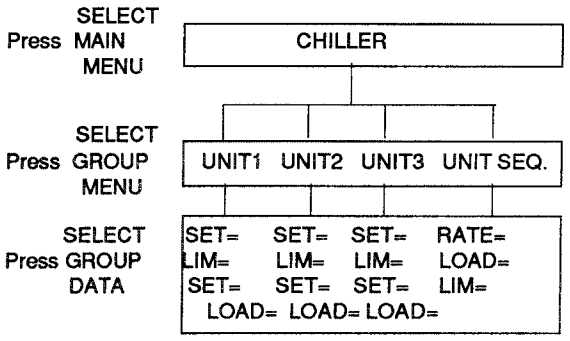

Figure 7

In general, temperature and current limit **group data** settings made in the **"CHILLER"** portion, take precedence over those made in the **"SYSTEM"** portion. The default value for "SET" and "LIM." values is "AUTO". This setting allows the settings entered in **"SYSTEM"** to assume control.[Reminder: For further detailed information on SCP699 panel programming, refer to CVMA-IN-1 (Installation), and to CVMA-OG-1 (Operator's Guide).]

Group data entries for "UNIT SEQ. SET =" determine the order of chiller sequence rotation. The entry in "RATE =" will then determine the rotation period (time). At the end of each period, the sequence order is advanced.

3. System Temperature Control

Chillers are sequenced on or off on the basis of the current drawn by operating chillers relative to a "trigger" current entered in "LOAD =" (UNIT SEQUENCE). A normal value between 90% and 95% will cause the next chiller in the sequence rotation to be started. Similarly, the "LIM. =" entry will cause the last chiller started to be turned off. A value less than 50% is recommended for this entry.

Whenever the system's common chilled water temperature strays from the setpoint, SCP699 resets the individual operating chiller setpoints. In this way, all operating chillers are persuaded to meet the system load.

4. Scheduling

SCP699 incorporates sophisticated 24-hour, 7-day time-clock and calendar functions. Different operating schedules can be set for each day of the week and holidays. Specific chilled water setpoints can also be established (ice storage systems). The panel contains a back-up battery to keep time during power failures.

5. Cooldown

"Cooldown" describes a slow-load strategy that limits the amount of system load the chillers will accept. This amount is gradually increased over time. This time period can be adjusted from 0 through 2-hours, in 15-minute increments.

For the specified period, chiller capacity is limited by SCP699. At the start of the period, the difference between the actual temperature and the setpoint is noted. Compressor currents are allowed to increase until the temperature begins to fall. At intervals, a calculation is made to extrapolate the cooldown time. After each calculation, the setpoint is adjusted to make the extrapolated time equal the cooldown time. At the end of the period, the "cooldown" limits are removed. Chiller control is no longer influenced by a slow-load strategy.

6. Reset

Three reset strategies are available. One resets the system control setpoint whenever the returning chilled water temperature is less than the system design return temperature. If the **SYSTEM group menu** "CHILLED WATER RESET" **group data** entry "SET =" is <25, the new setpoint is determined by an equation that permits a variety of reset rates. The new setpoint is raised as the system load decreases.

The second strategy uses outside air temperature as the reset indicator. If the above **SYSTEM** entry is >25, the new setpoint is proportional to the difference between a base design outdoor air temperature and the actual temperature.

A special DIP switch setting permits "normal" or "reverse" authority for this resetting strategy.

Examples of several ***load-based*** reset strategies are shown in Figures 8 through 11. A definition of abbreviations is needed:

- STMP Actual system leaving chilled water temperature.
- AUXTMP Actual system return chilled water temperature.
- SCWS Scheduled or BAS-generated system chilled water setpoint.
- CWR (RATE) Decimal value of the entered reset rate that determines reset aggressiveness.
- CWR (SET) Entered reset temperature that acts as a base amount of reset.
- RSCWS The newly calculated chilled water reset temperature.

The mathematical expression for the resetting equation is:

RSCWS = SCWS + CWR(RATE) x [CWR(SET) + STMP - AUXTMP]

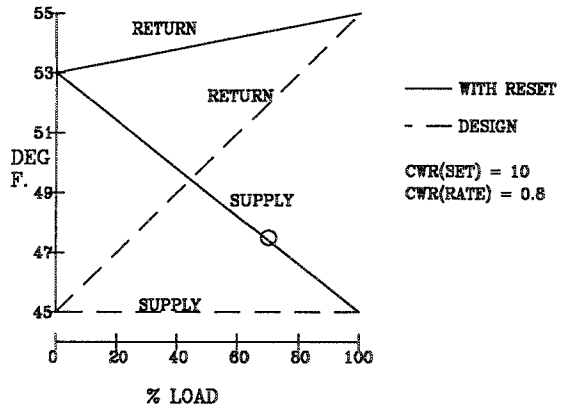

Figure 8

Figure 8 shows what happens if:

The system temperature rise at design is 10 F and, STMP = 45 F, AUXTMP = 52 F, SCWS = 45 F, CWR(RATE) = 0.8 (80%), and CWR(SET) = 10 F.

This particular load condition causes the temperature setpoint to be reset to 47.4 F. The slope of the pictured reset line is expressed mathematically above. Increases in either CWR entries will make resetting more aggresive.

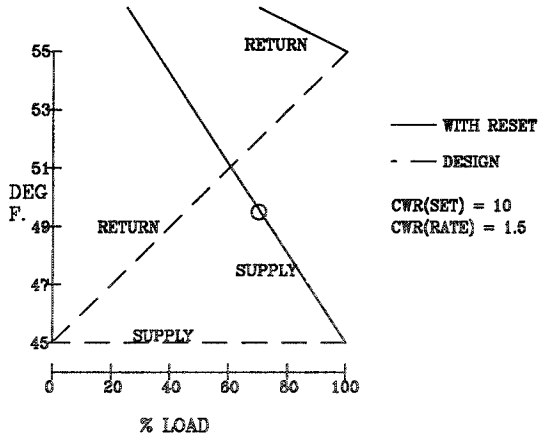

Figure 9

For example, Figure 9 shows the effect of increasing CWR(RATE) to 1.5. RSCWS now is 49.5 F, all other conditions remaining constant. When CWR(RATE) is established at a value higher than 1.0, resetting is so aggressive that the return water temperature rises with decreasing load. If CWR(RATE) is entered at 1.0 (100%), and CWR(SET) is fixed at the system temperature rise at design, the reset schedule will attempt to keep the return water temperature constant. This is shown in Figure 10.

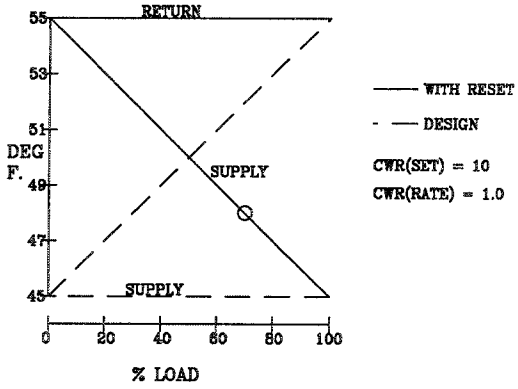

Figure 10

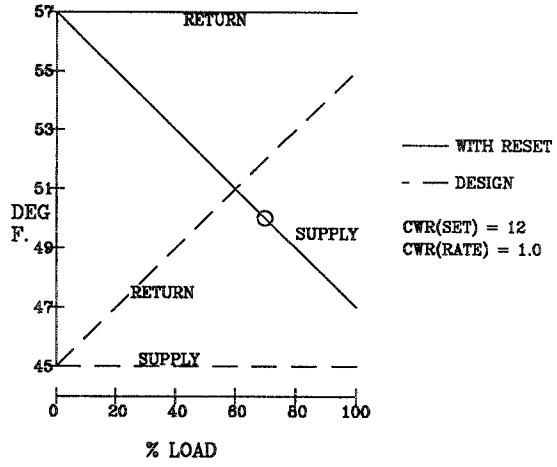

Figure 11

Figure 11 shows what happens when CWR(SET) is established at 12 F. This value, being higher than the system ΔT, causes a 2.0 F "bias" reset at all loads for both supply and return water temperatures. CWR(RATE) of 1.0 establishes a constant return temperature of 57 F.

The second reset strategy is *ambient-based*. The exact meaning of two variables changes:

- AUXTMP The actual ambient temperature.

- CWR(SET) The base reset increment must now be greater than 25 F. This input is usually the design ambient temperature.

Also, the equation is changed to:

RSCWS = SCWS + CWR(RATE) x [CWR(SET)- AUXTMP]

If: SCWS =45 F
CWR (RATE) = 0.3 (30%)
CWR (SET) = 95 F
AUXTMP = 80 F
then,
RSCWS = 49.5 F

The third reset strategy permits an outside analog signal (4 - 20 milliamps, or 0 - 10 volts) to reset system chilled water temperature setpoint directly at the SCP699. This external analog reset can also be used with the "generic BAS" interface, as described on page 10.

7. Demand Limiting

System electrical demand can be limited by sensing the building's (or system's) electrical demand meter pulses. A maximum (percent) of the total building or system demand is input to SCP699. The actual demand is compared to this product. The current draw of all operating chillers is reduced at a minimum rate of 2% per minute whenever the input peak is exceeded.

In order to be most effective, the total chiller electrical power should be a significant portion of the building power, as sensed by the demand meter. Otherwise, the chillers could be unloaded completely without greatly impacting the building electrical demand.

A current limit and temperature control heirarchy protects the chillers. CenTraVac inlet vanes are positioned on the basis of an ordered structure of regulators. Individual chillers are controlled to respond to the minimum capacity determined by these limiters:

- Evaporator refrigerant temperature

- Condenser refrigerant pressure

- Compressor motor load limit current

- CenTraVac electrical demand limit setting

- Chiller system current limits issued by "Cooldown" or Trane BAS interface

- System electrical demand limit

- Leaving chilled water temperature

In other words, control over the leaving chilled water temperature is sacrificed if any of the electrical demand or current limits restrict capacity. And, the supply chilled water temperature will drift upwards if the supplied capacity does not meet the imposed cooling loads.

8. Centralized Manual Control

This capability is simply the coordination of all the preceeding capabilities at one central location....the SCP699 panel. In addition, unit chilled water pump control, condenser water temperature limit control, and free cooling control are also included.

There are significant operating advantages to be gained from this capability. The ability to execute manual control over the operation of a chilled water system from a central location is important to many designers and operators.

The SCP699 panel can be remotely located. The maximum distance for the communications links and sensors (using 14 ga. wire) is 5000 feet. A single twisted pair of wires handles all bi-directional communications between the SCP699 and the chillers, which can be "daisy-chained" (Figure 12). Dedicated wiring for other sensors, inputs, alarms, and system components (pumps) is also required. Specific wiring connections are detailed in the "Installation Manual" CVMA-IN-1A.

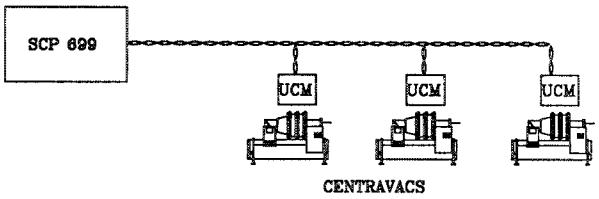

Figure 12

SCP699 is equipped to accept 2 binary pairs of input:

- Scheduled System Enable/Disable. This permits a remote device to enable or disable the entire chiller system. This can be any on/off switch.

- Free Cooling Enable/Disable. This allows a remote on/off device to enable or disable system-wide free cooling.

Either, or both, of these functions can be initiated remotely without effecting other SCP699 capabilities.

9. Auxiliary Components Control

Various water pumps can be controlled by SCP699.

- one (1) system chilled water pump

- three (3) unit chilled water pumps

- no (0) condenser water pumps. No condenser water pumps are controlled by SCP699. Instead, signals to start specific condenser water pumps originate in each CenTraVac UCP695 controller. Interlocking, to verify condenser water flow, also is accomplished at the chiller UCP's.

- no (0) cooling tower fans. No tower fans are controlled by SCP699. The interlocking and temperature control of cooling towers is a separate function and is not integrated with this system. See the next section, "Condenser Water Temperature", for additional information on this subject.

10. Condenser Water Temperature

The condenser limit option is not a condenser water temperature *controller*. Rather, it is an enhancement that permits dual-stage *limitation* of temperature by way of the normal condenser water temperature control system. Its purpose is to maintain a minimum refrigerant pressure differential between each chiller's evaporator and condenser.

An optional "sideboard" is factory-installed inside the SCP699 enclosure. (This sideboard is the same device that serves as a *"generic BAS analog interface"*).

One condenser refrigerant temperature sensor must be installed for each chiller that is to be interfaced with this option. This sensor is connected to terminals in UCP695. The "side board" has one set of terminals dedicated to condenser limiting. These accept a (read only) sensor which can be in water or air. The condenser relays are located on the main board of SCP699.

Evaporator refrigerant temperatures for each chiller are available at SCP699 through the bi-directional communications link (BCL). The difference between the condenser and evaporator refrigerant temperatures is calculated. When this difference increases to a pre-established limit, the output relay is closed, thus enabling the normal tower water control system. Adjustments are in 4 F increments between 36 F and 64 F. Likewise, a drop in this difference opens the output relay, disabling the normal control system. Adjustments to open vary from 24 F to 52 F, and the minimum "open" time is 2 minutes.

SCP699 monitors the refrigerant temperature differential of each operating chiller. It uses the unit with the lowest differential to determine if the cooling tower water temperature control should be disabled.

For example, closure of an output relay at a differential of 50 F (85 - 35) enables the normal tower water control system to function. When the differential temperature falls to 38 F (73 - 35), relay opening can be made to disable the normal control. Or, relay opening could be arranged to open a tower bypass valve. Thus, a minimum limit of 38 F differential temperature is established between the evaporator and condenser refrigerant.

11. Free Cooling Control

The free cooling option on SCP699 permits the system operator to select either manual or automatic switching to (or from) free cooling. Once switched to free cooling, the entire chiller system is in the free cooling mode. It is not possible for individual chiller's free cooling mode to be controlled through SCP699. This can only be accomplished at the chiller UCP.

Manual execution of the system-wide free cooling mode is simply a matter of pressing the

SCP699 front panel push buttons.

A third type of free cooling uses the "free cooling binary input". Closed, free cooling is initiated; open , it is terminated. The open/close decision is external to SCP699.

Automatic, thermostatically-controlled free cooling requires the addition of a sensor in either the common entering condenser water line or outdoor ambient. This sensor is used as a trigger to *start* free cooling, but only if the chillers are not running. The decision to *stop* free cooling is based on the supply chilled water temperature sensor. When a high-limit temperature is reached, free cooling is cancelled and chillers return to the powered cooling mode. To prevent possible cycling, any action to cancel free cooling is suspended during the "cooldown" period.

Chillers not equipped with the free cooling option cannot be operated at the same time with chillers on free cooling without independent condenser water control. Running powered chillers while being supplied with uncontrolled very cold condenser water can cause chiller malfunction or damage. Trane Applications Manual CON-AM-21 provides alternative ways to design and execute condenser water temperature control.

Generic Building Automation System (BAS)

A generic building automation system (BAS) interface to SCP699 is provided at the same "sideboard" terminal strip used for "Condenser Water Temperature Control" (See item 10, page 9). When this connection is made, most SCP699 capabilities are disabled and must be performed separately by the generic BAS. Those SCP699 functions that remain operative are:

- Condenser water temperature limit control
- Remote system enable/disable
- Remote or automatic free cooling enable/disable
- System alarms (system-level only)
- Unit-level chilled water temperature set-points, via 4 - 20 ma., or 0 - 10 vdc. direct resetting inputs.
- Unit-level current limits, via 4 - 20 ma., or 0 - 10 vdc. direct resetting inputs.

All other SCP functions are mute.

Tracer-100 Building Management Controller

(Figure 13) Tracer-100 is a powerful Trane building management controller. The Trane Integrated Comfort System uses the Tracer-100 to orchestrate a system-wide control strategy. It

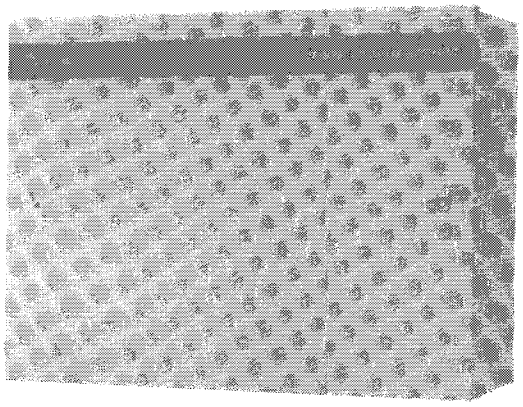

Figure 13

communicates with SCP699 through a twisted pair of wires using a proprietary bi-directional communications link (BCL). All information that is available at the SCP699 user-interface is also available at the Tracer-100. And, the Tracer can be used to communicate all programmable control settings to SCP699.

The bi-directional communications link (BCL) connection is made at terminal board TB2 inside the SCP699 panel. This is a direct serial connection, just as are the SCP699 connections to individual chillers. If more than 15 minutes elapses between Trane BAS communication updates, SCP699 will default to its own internal control values. During a period of "lost Tracer contact", SCP699 sequencing and control logic remain intact.

A Tracer-100 that is connected to SCP699 is probably also being used to perform other system-level chores. A particularly useful application involves the Tracer's ability to monitor data and format reports. The Tracer-100

can interface conventional personal microcomputers via the "Tracer Building Management Network".

This network permits report generation, trend logging, alarm call-out through a telephone modem, and remote data inquiry through the same telephone modem. Service companies find this capability an extremely valuable productivity improvement tool.

Tracer-100 provides other building-level and system-level capabilities. Among these are: control of cooling towers , fans and pumps; extensive building electrical demand limiting; coordinated scheduling; timed override; optimal start/stop; and plant lock-out. All individual chiller monitored points, even those not interfaced by SCP699, are available at the Tracer-100.

Extensive application and user information for Tracer-100 is available in two publications:

- EMTB-OG-1 Tracer-100 Operator's Guide
- EMTN-OG-2 Tracer Building Management Network Operator's Guide

Tracer-1000 Building Management System

The Tracer-1000 system is an extremely powerful building automation and control system, that is part of the Trane Integrated Comfort System architecture. The Tracer 1000 interface to the SCP699 takes full advantage of the bi-directional communications link by way of a Unit Control Interface (UCI) panel. The bi-directional communication link is connected to the UCI which, in turn, is connected via a twisted shielded pair of wires to the Tracer 1000. The UCI serves as a communication translator for the Tracer 1000 system.

When connected to the SCP699, the Tracer 1000 monitoring and control capabilities can be applied to the chilled water mechanical system. Like the Tracer 100, the Tracer 1000 has access to all chiller diagnostic information and can control system chilled water and current limit setpoints.

The Tracer 1000 allows ***all*** SCP699 information points to be assigned as actual Tracer 1000 points. This is unlike the Tracer 100, which allows only a subset of SCP699 information points to be assigned as actual Tracer 100 points. This means that chiller data is available for monitoring via color graphic displays, trend logs, reports, etc., and for control by the Tracer 1000 standard application programs. This adds up to 115 monitoring and control points for each SCP699 panel.

The Tracer 1000 has the added capability to control individual chiller chilled water and current limit setpoints via the SCP699. This permits increased chiller plant control flexibility on an individual chiller basis.

The Tracer 1000 system can interface with multiple SCP699 panels. The maximum configuration will depend upon system hardware and software structure and the applications being performed.

Detailed explanations of Tracer-1000 interfaces to CenTraVacs, programming, and application information are available in the following publications:

- BAS-OG-1
- EMTC-PG-1
- EMTC-AG-1

PART II

This section of the manual is broken into *"How To Design The System"* and *"How To Put The Parts Together"*. They are arranged in "cookbook" fashion in hopes that application to everyday systems will be made more simple.

How To Design The System

1. Qualify the Application

Any CenTraVac installation can be an acceptable "Integrated Comfort System" candidate. In order to qualify, the CenTraVac *must* be equipped with the model UCP695 control panel. Older machines can be retrofitted to have this capability.

Any of the following qualifiers point to a good reason for selecting the ICS option:

- Remote monitoring of chiller(s) or system operating parameters
- Remote adjustment of chiller(s) or system operating parameters
- Coordinated control of multiple chillers
- Automated enable/disable instructions for various chiller(s) or system operating parameters
- Limiting of system-wide electrical demand

2. Establish a clear expression of your goal(s)

In order to translate any concept into reality, a clear expression of the goal is necessary. A fuzzy idea of what you want to accomplish will not do. The clear expression may not be completely doable, but at least it is a starting point. It is best to separate the goals and not combine them into one unmanageable statement. Keep the expressions simple.

Examples of several goal expressions might be:

- Start and stop the chilled water system according to hourly/daily/weekly schedules.
- Remotely reset the system chilled water supply temperature from the building supervisor's office.
- Operate three chillers in a sequence which is changed periodically to equalize chiller operating times.

3. Determine which goals can be accomplished

Part I of this manual describes the various features and functions associated with the four different electronic interface possibilities. If a particular objective is not covered, it may still be possible. Chances are, however, that such objectives, while theoretically possible to achieve, are excessively troublesome to accomplish. Their economic justification should then be researched to avoid the "radar on a canoe" syndrome.

4. Establish the method you will use to accomplish each goal

This step will confirm that the goals are achievable, because a specific method of execution is defined. There may be more than one way to achieve a goal. In that case, the alternative ways must be measured and compared. Not all methods give exactly the same results. And, all do not cost the same.

Further, certain features are grouped. This permits the cost of one option to serve multiple functions. You will want to perform as much grouping as possible, for economical reasons.

How to Put the Parts Together

This section of the manual is a "cookbook".

- Reset chilled water supply temperature
- Remote system start/stop (timeclock)
- Remote alarm(s)
- Reset chiller electrical demand
- Remote monitoring
- Coordinated control of multiple chillers
- Control ice storage system
- Convert existing chiller(s) to permit coordination with new chiller
- Control or monitor Trane chillers from non-Trane BAS

Common objectives are listed. An explanation follows the objective.

Since there are only four pieces of hardware that are used (as indicated on page 3), these are our only "ingredients". The rest is "method".

Reset Chilled Water Supply Temperature

1. Automatic temperature resetting only. This is an optional feature of every CenTraVac equipped with the UCP695 control panel. This feature can be enabled or disabled at the chiller. Logic for resetting can be *load-based* or *ambient temperature-based.* Examples of the results of various reset schedules are shown by Figures 8 through 12.

    a. *To automatically reset the supply chilled water temperature of an individual chiller, use the load or ambient-based optional resetting capability of the CenTraVac control panel.*

2. Remote reset.

    a. *To remotely reset the chilled water temperature setpoint of a* ***single CenTraVac,*** *the Trane Remote Chilled Water Temperature Reset Module, described on page 3, is used.* This is a specific purpose device. It can perform no other function. One module is needed for each chiller, since a pair of communicating wires are tied directly into the 1U4 module in each chiller's control panel. No particular reset strategy is built into this module. Instead, it simply acts as a transducer that interprets an input analog signal and sends out the appropriate reset message directly to a CenTraVac UCP695 panel.

    If this is the only function desired, this is the least expensive way to achieve it. This solution can be applied to any number of multiple chillers. But, one module is needed for each chiller. All modules can be fed from a common analog resetting voltage (0-10 vdc.), or current (4-20 ma). The maximum amount of reset is +20 F.

    b. *Use the capabilities of SCP699 to reset the* ***system*** *chilled water temperature setpoint.* Temperature resetting is but one of the many SCP699 capabilities, as outlined on page 3. A more detailed explanation appears on page 6. Some examples are also shown.

    c. *Use a Tracer 100 or Tracer 1000, through SCP699,to reset the* ***system*** *chilled water temperature setpoint.* Since a Tracer-100 of Tracer 1000 interface through a SCP699 can perform everything that the SCP699 and UCP695 can, remote resetting by way of several strategies is possible. This is done via the bi-directional communications link, and thus does not interfere with other SCP699 functions.

    d. *Use a "generic BAS "through SCP699 to reset the* ***system*** *chilled water temperature setpoint.* Resetting through a "generic BAS" (to SCP699 equipped with the "sideboard" terminal strip) is explained on page 10. When this method is used to reset the chilled water temperature, most other SCP699 capabilities are lost. The maximum amount of reset is +20 F.

Remote System Start/Stop Timeclock

1. Unit-level control. Any CenTraVac requires chilled water flow in order to operate. Consequently, chilled water flow is a required electrical interlock. A CenTraVac will not start, or continue to run, without this interlock being closed.

    a. *An electrical contact in series with the flow interlock can be used to enable/ disable an individual CenTraVac.*

    While this is a simple way to execute remote start/stop commands, it contains an unwelcome flaw: Whenever this contact is opened, the CenTraVac microprocessor interprets the event as a flow stoppage and displays the appropriate diagnostic message. This presents no operational problem other than the misleading message.

2. System-level control. SPC699 embraces a sophisticated scheduling regimen, as explained on page 4.

   a. *Use the 7-day, 24-hour, scheduling capabilities of SCP699 to start and stop the complete chilled water system.*

   b. *Use Tracer 100 or Tracer 1000, through the SCP699 bi-directional communications link, to override established SCP699 schedules.*

   c. *Use binary enable/disable inputs to SCP699 (TB3) to turn the chilled water system on or off.* When this connection is made to SCP699, most other features are retained, as this binary connection does not interfere in the same way as the "generic BAS" interface does.

Alarms

1. Announce chiller diagnostic codes.

   a. *Use the standard CenTraVac control panel to display all chiller diagnostic codes.*

2. Remote annunciation of chiller alarm(s). Remote chiller alarm annunciation schemes cannot reset "latching" diagnostics. Any chiller trip that mandates manual resetting requires that the resetting occur at the effected chiller.

   a. *Use the optional "alarm relay package" on the CenTraVac control panel.* This set of dry contacts can be used to establish continuity in a remote alarm circuit. The signal does not define the nature of the alarm....only that the chiller is inoperative because one or more safety-related devices has tripped.

   b. *Use SCP699 to display all chiller diagnostics.* The full set of standard individual CenTraVac diagnostic codes is automatically displayed at the SCP699 when they occur.

   c. *Use Tracer 100 or Tracer 1000, through SCP699, to display all chiller diagnostics.* This arrangement duplicates the SCP699 monitoring capabilities described in the preceding paragraph.

   d. *Use Tracer Building Management Network, through a Tracer and SCP699, to permit a personal computer (IBM-PC or equivalent) to act as a remote monitor.* Tracers and the Network can be programmed to respond with an audible signal whenever any monitored variable strays outside a permitted range of values.

   e. *Use SCP699 "alarm relay" interface (to generic alarm) to indicate an SCP latching (requiring manual reset) diagnostics.* This connection will not alarm diagnostic conditions that occur at the chiller(s).

Reset Chiller(s) Electrical Demand

1. Individual chiller electrical current demand.

   a. *Reset the maximum current demand of an individual chiller at the **unit control panel.*** This is a manual adjustment made at the CenTraVac control panel.

   b. *Use SCP699 to reset individual chiller current limit values remotely.* This setting will supercede the unit control panel setting.

   c. *Use Tracer 100 or Tracer 1000, through SCP699, to set individual chiller current limit values.*

   d. *Use "generic BAS" interface (to SCP699) to set individual chiller current limit values.* Analog signals (4 - 20 ma. or 0 - 10 vdc.) sent to SCP699 are used to reset the current limits.

2. System-level electrical current demand.

   a. *To establish and maintain chiller(s) ampere demand limit based on the total full load currents of all chillers in the systems, use SCP699.* Whenever the established limit is met, SCP699 controls chiller inlet vane positions on all operating chillers so the limit is not exceeded.

b. *Use SCP699 to establish and maintain a* ***system power (kw) demand limit*** *based on the total power absorbed by the system.*

This method uses a system watt-hour/ pulse initiator to measure the system's instantaneous power level.

Whenever the established limit is met, SCP699 controls chiller inlet vane position on all operating chillers so the limit is not exceeded. Since chillers do not account for all power absorbed, their control over total power is not absolute. To make this strategy more responsive, the chillers must represent a majority of system power requirements.

c. *Use Tracer 100 or Tracer 1000 to perform system-level demand limiting via a connection to the system's power meter.* This concept is similar to the SCP699 method described above. In this case, however, Tracer performs electrical demand limiting on components both within and outside the chilled water system; eg. lights, heaters, etc.

Remote Monitoring

Several strategies of remote monitoring are possible. Major determinants are 1) the number of "points" to be monitored, 2) the nature of monitored items, and 3) the distance between the monitored item and the display. Any remote monitoring, using existing sensors, requires a system control panel SCP699 for communications.

1. <u>All monitored items are accessed by the CenTraVac or SCP699 panels.</u>

   a. *Use SCP699 to display all chiller and/ or system dignostics.* The full set of standard individual chiller diagnostic codes is automatically displayed at the SCP699 when they occur. In addition, the full set of system reports is accessible anytime at the SCP. Four system and as many as 3 chiller "status reports" are available at the SCP699.

   b. *Use Tracer 100 or Tracer 1000 to communicate SCP699 data to a separate telephone modem.* When the full sets of data referenced above need to be transmitted great distances (more than 5000 feet), or need to be sent to a location other than that of the SCP699, a telephone modem and phone line are required. A Tracer Building Management Network, using PC's as monitors, can also be connected to the modem.

2. <u>Monitored points are not restricted to the chiller(s) or the chilled water system.</u>

   a. *Use SCP699 and Tracer 100 or Tracer 1000 to gather data and display it or develop reports at the Tracer.*

   b. *Add Tracer Building Management Network, using PC's as monitiors, to the above equipment if monitoring location is remote from Tracer, or this location is one of several to be monitored.*

   c. *Add modem and telephone line to the above equipment if distances are great, or this location is one of several to be monitored.*

Coordinated Control Of Multiple Chillers

A wide variety of strategies can be used to fit a specific multiple chiller control concept. It is

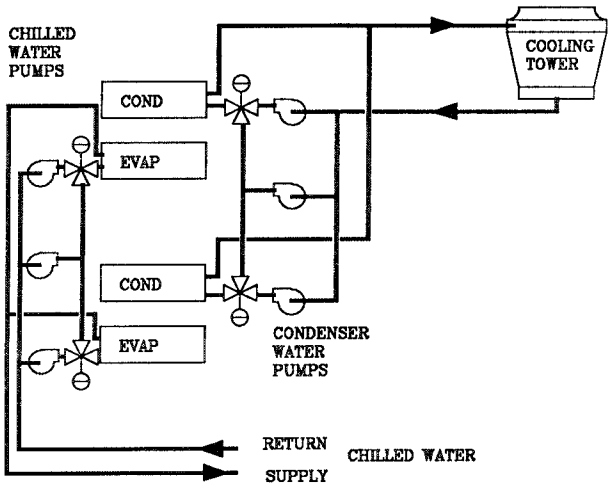

Figure 14

fundamentally crucial to have clear understanding of the physical system....the piping scheme, pumps, sequences of operation, etc. The first step is to make a schematic drawing of the piping and pumping sytem, including the loads and their control elements. This drawing should reduce the system to its most simple elements. A "ladder" diagram is often useful for this purpose. Figure 14 shows an example of a useful schematic drawing.

Next, a brief description of how the system operates should be written. It is often helpful to have someone other than the designer read this description for logic and clarity. Table 2 contains a brief description (not a specification) of the system shown in Figure 14.

Table 2

Two equally sized chillers are piped with evaporators in parallel. Each chiller is served by a dedicated chilled water pump. A third standby chilled water pump is piped and valved so that it can be used in place of either of the two dedicated pumps.
Condenser water pumps are likewise dedicated to a specific chiller and piped in parallel, with a third standby pump availble. Condenser water pumps take tower sump water, push it through its condenser, and send it to the top of the cooling tower, where it is cooled via evaporation and falls back into the sump. Control of condenser water supply temperature is accomplished by fan control separately.
The system is to be controlled by a system panel that sequences pumps and chillers on and off on the basis of load. This panel also changes chiller sequence automatically to equalize running time. The panel will maintain a common chilled water supply temperature.
The system is enabled and disabled by the system panel through a programmed schedule (timeclock function). Chilled water pumps are energized by the system panel. Condenser water pumps are sequenced by the chiller panel interlocking.

Once these steps are completed, the following list of possible combinations can be reviewed for a "fit". If no fit can be found, the two possibilities are: 1) the proposed system may not work, or 2) the proposed system may work but it will require custom engineering and design. And, it may require control devices that are not commonly available, or are improperly applied.

- 2 or 3 chillers, common parallel pumps (Fig. 15).
- 2 chillers, common series flow (Fig. 16).
- 2 or 3 chillers, dedicated parallel pumps (Fig. 14).
- 2 or 3 chillers, decoupled chiller and distribution pumps (Fig. 17).
- 4 or more chillers, decoupled chiller and distribution pumps (Fig. 18).
- any of the above applied to ***constant*** or ***variable*** system chilled water flow.
- any of the above applied to ***common*** or ***dedicated*** condenser water supplies.

Coordinated control of a multiple chiller system requires some kind of system controller. Individual chiller temperature controls are not capable of communicating directly with other chiller controls to establish a system control strategy.

SCP699 is specifically designed to function as a

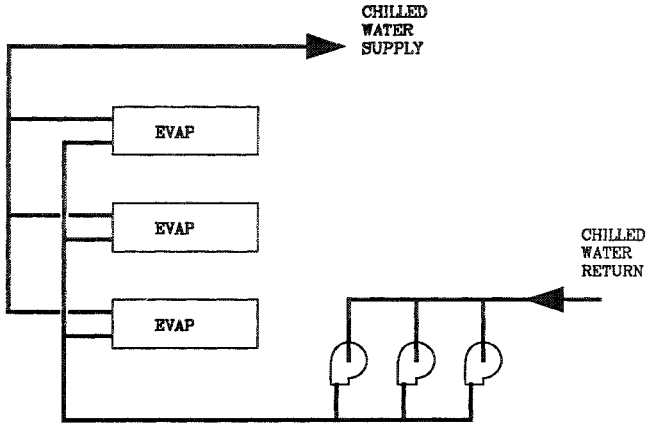

Figure15

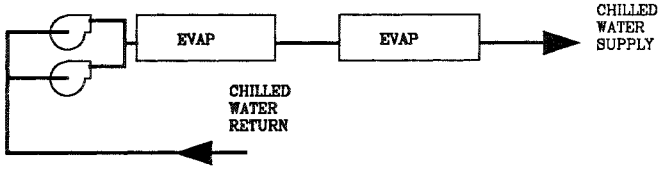

Figure 16

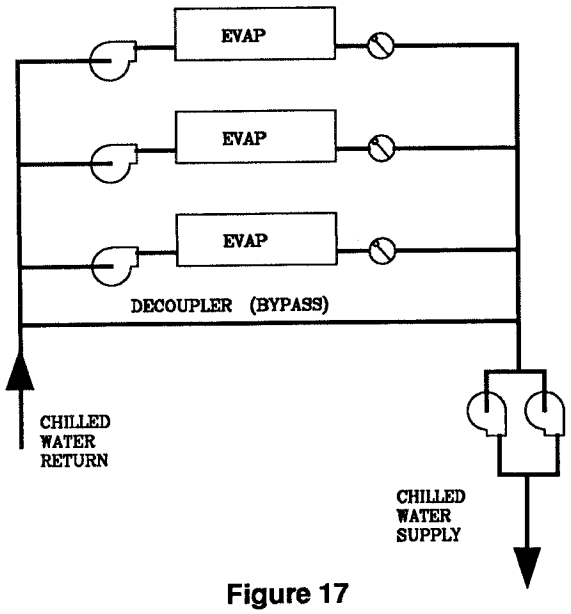

Figure 17

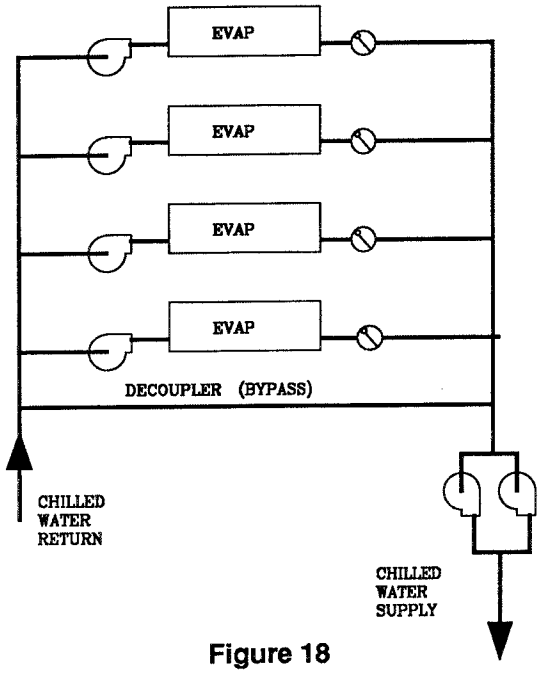

Figure 18

system controller. As is indicated in Table 1 on page 4, this is one of the 11 primary functions of SCP699. In order to set up SCP699 for any of the above named systems, follow the instructions included in the SCP699 Operator's Guide, CVMA-OG-1.

A single SCP699 can control up to 3 chillers. For coordinated control of 4 or more chillers, additional SCP699 panels are needed, a maximum of 3 chillers per panel.

Figure 15. 2 or 3 chillers, common parallel pumps. This arrangement is commonplace. Often, it is seen as using a single pump instead of multiple pumps. Chilled water pump(s) provide circulation in the chillers and the loads. Water flows through the evaporators of all chillers constantly. Loads are either "wild" coils or coils controlled by 3-way valves. This provides a constant flow of water throughout the system.

Since the common supply temperature is a mixture of water from each chiller, it is an average of all chillers, whether they are operating or not. This executes supply water temperature control if each chiller is controlled at a constant temperature. As system load decreases, individual chillers are unequally unloaded or turned off. Some designers feel that this provides "automatic reset" of the common supply temperature.

a. Using this philosophy, system control can be as simple as *using a return chilled water controller (actually, a thermostat) to establish the number of operating chillers.* Once established, the sequence of chiller operation can only be changed electrically with the equivalent of a dpdt switch (2 dpdt switches for 3 chillers) on the output of the controller.

b. *If more sophisticated control coordination or response is required, use SCP699 as a system controller.* See SCP699 Operator's Guide CVMA-OG-1 for details.

Figure 16. 2 chillers, common series flow. A single pump circulates water throughout the system. Flow is constant. Each operating chiller produces chilled water at a different temperature. The inoperative chiller simply allows water to pass through without a temperature change. A pressure loss is sustained in this process.

In its simplest form, coordinated control means setting each chiller for its design temperature. When the load raises the returning chilled water to a temperature high enough to start the downstream chiller, it starts and carries all the load it can. When the return temperature rises so far that the downstream chiller cannot carry the load, the upstream chiller will start. The re-

verse process occurs when the cooling loads decrease.

a. Alternate chiller sequencing may or may not be possible, depending on the specific selection of chillers. If all chillers are designed for the system common supply temperature, *sequencing (first chiller to start) can be changed by setting the temperature controllers for the upstream chiller lower than the downstream chiller.* While this is inelegant and cumbersome, it will work.

b. As in the case of parallel chillers, *a SCP699 panel will coordinate sequencing and alternating of series connected chillers.* This panel sequences chillers by a combination of resetting supply water temperature setpoints and chiller motor loading. Basically, the panel will lower individual chiller setpoints in an effort to maintain the common system supply temperature. A signal to start an additional chiller is given when exiting chillers indicate loading via their motor current consumption.

Figure 14, 2 or 3 chillers, dedicated parallel pumps. Pumps and chillers operate in dedicated pairs. Any given chiller will not operate without its pump, and vice-versa. As in the case of common chilled water pumps, system loads (coils) are either "wild" or controlled by 3-way valves. With this arrangement, system flow varies depending on the number of pumps and chillers running.

Simplistic coordinated multiple chiller control is difficult to achieve, because system loads (demand) are not easily found.

a. *Use SCP699 System Control Panel to coordinate the control of this system.* This controller uses chiller motor current to determine individual chiller loading, and the need for additional chiller capacity. It also sequences pumps appropriately with the chillers.

Figure 17, 2 or 3 chillers, decoupled chiller and distribution pumps. This arrangement dedicates chiller pumps to individual chillers. In addition, it dedicates a system distribution pump to the task of circulating all the water the system loads need. Usually, this flow varies with load changes. Individual chiller flows, however, are constant....either on or off.

a. Two fundamentally different control methods exist. The first scheme *uses a SCP699 to coordinate control of the chillers and all pumps.* As before, chiller sequencing signals are a consequence of motor loading. Since chiller/pump sequencing can dramatically change the perceived return water temperature at each operating chiller, load shifts occur relatively quickly. Thus, the chiller water temperature controller should be set for a faster than normal response time.

b. The second scheme uses the direction and amount of flow in the decoupling bypass water line to determine chiller/pump sequencing activity. A full explanation of the dynamics of this concept appears in Trane Application Manual CON-AM-21 (587). See Figure 14. A single "Annubar" flow measuring probe is used to detect both overflow and reverse flow in the bypass decoupler line. A "zero flow" signal is interpretted as reverse flow and causes the "Eagle-Eye" pressure switch to close and operate the cam switch motor in the direction of "more pumps". The "Eagle Eye" switch is set to close in the "overflow" mode when it detects flow of approximately 115% of the rating of the next pump to stop. *More elegant system control strategies are possible by using a Tracer 100 through SCP699.* When bypass flow is used as the sequencing determinant, the electric outputs of the flow meter (either binary or analog) are fed into the Tracer for processing. SCP699 can still be used for system duties other than coordinated control, which is assumed by the Tracer 100 with this scheme.

c. An alternate approach is to use *Tracer 100 analog temperature inputs*, per Figure 19. These values are then

processed by the Tracer to calculate flows without ever actually measuring them. Classic temperature and flow mixing equations are used. Appropriate timing functions are also included in the Tracer programming.

Figure 18. 4 or more chillers, decoupled chiller and distribution pumps. Once a system reaches this size, it is usually large and complex enough for the power of a Tracer 1000. SCP699 capbilities are limited to monitoring functions only. A

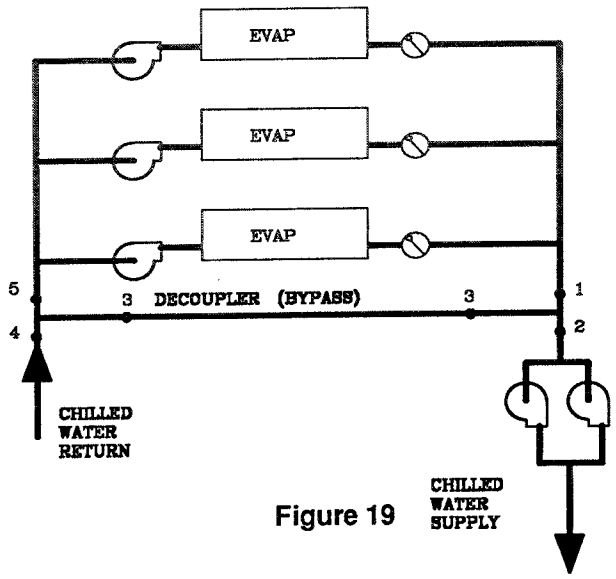

Figure 19

Tracer 100 can accept a "twisted pair" connection to only one SCP699. Therefore, a system of 4 or more chillers would require multiple Tracer 100/SCP699 pairs to accomplish all 11 functions listed in Table 1,page 4, plus remote monitoring.

a. *Use Tracer 1000 to connect multiple SCP699 panels via the "twisted pair".* This scheme permits the Tracer 1000 to function as a single point BAS for all chiller system functions.

b. *Use the mechanical system described on page 18 to sequence multiple chillers and chilled water pumps.* This concept is more thoroughly explained on pages 7 and 8, CON-AM-21 (587). Temperature control remains confined to the individual chillers. System scheduling can be accomplished by a simple "time-clock" to enable the step controller shown in Figure 16, page 8, CON-AM-21 (587).

Ice Storage System Control

The control of only one of several possible ice storage systems is explained here. Figure 20 shows a CenTraVac applied to Calmac® tanks. This system is described more fully in Application Manual SYS-AM-10.

Control strategy focuses on several characteristics of this system:

1. It is not possible for a CenTraVac to "overcool" the chilled anti-freeze solution so

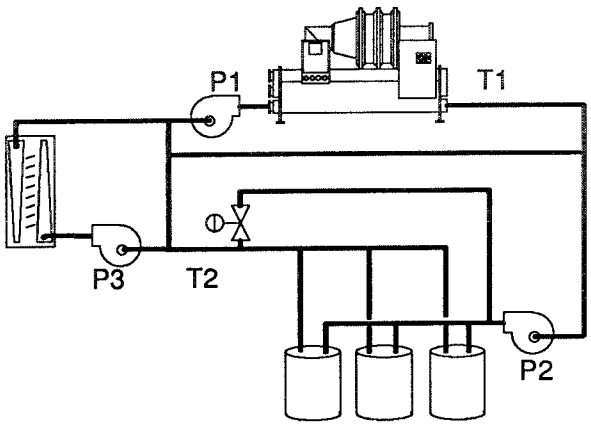

Figure 20

long as the water in the tanks is a liquid.

2. Completion of the tank "freeze cycle" is accompanied by a dramatic and sudden reduction in return chilled solution temperature.

3. The system can have 5 modes of operation:

a. **Build ice.** In this mode the chiller has this one objective. Since this mode occurs when electric energy and demand are at minimum cost, the chiller is allowed to operate without power or temperature restrictions. The chiller temperature controller is reset to a value which it may not be able to reach. In this way, the chiller will run at its maximum capacity for these conditions.

b. **Burn ice.** In this mode, ice is melted by the system chilled water load. The chiller is not operating because this mode of operation occurs at a time when the energy cost of chiller

operation is being avoided.

c. **Build and cool.** Some systems require cooling while the ice is being stored. In this case, the chiller must be capable of accepting the added system load and reaching the output temperature required for ice production, **simultaneously**. This requires the added chiller capacity and the ability to modulate capacity as the cooling load changes.

d. **Burn and chill.** Many ice storage systems employ "partial storage" or "load leveling" as a way to lower energy costs. This scheme involves loading the chiller 24 hours a day to meet design load conditions. During the day, then, system loads are satisfied by melting ice **and** operating the chiller. Further, this strategy permits anticipation of future loads so as to optimally select the lowest cost way (ice or instantaneous chilling) to produce cooling capacity.

e. **Direct cool; save ice.** "Partial storage" systems require some way to save stored ice for a particular high demand period of the day. For example, the chiller can be piped to provide instantaneous cooling directly to the load during morning hours. In the afternoon, when other electrical loads peak, the chiller is either modulated or turned off to allow stored ice to meet the loads.

Table 3

Mode	P1(gpm)	P2(gpm)	P3(gpm)	T1(F)	T2(F)
1	1000	1000	OFF	24	-
2	OFF	1000	800	OFF	40
3	1000	1000	800	24	-
4	1000	1000	800	40	40
5	1000	OFF	800	40	-

Table 3 shows the various pump, valve and control settings to accomplish each of these modes of operation. (See Figure 20).

To automate system control, use SCP699 and Tracer 100. SCP699 is used, with or without multiple CenTraVacs, to permit full bidirectional communications with the Tracer 100 BAS. Tracer is equipped with custom software to execute the above 5 modes of operation at the appropriate times. Tracer software is available in "pattern" form for individual project customization.

"Fail-Safe" Communications

When SCP699 is used as the system controller, it is serially connected to each CenTraVac control panel. If, for any reason, SCP699 communications are lost or interrupted, all CenTraVac controls revert to their own individual settings. Chillers and pumps that were running continue to operate. Idle pumps, and their interlocked chillers, will not start unless they are manually started.

Convert existing chiller(s) to permit coordination with new chiller.

Increasing numbers of chiller installations are additions to or renovations of existing chilled water systems. Consequently, the retrofit of existing chillers to be compatible with the new technologies is an important capability.

Any electrically driven centrifugal chiller can be converted to "look like" a new CenTraVac to the control system. Usually, this conversion involves replacing or reworking the following subassemblies:

1. The chilled water temperature controller
2. The chiller control panel
3. The compressor inlet vane modulation mechanism
4. The compressor motor starter

It is not a trivial project to make the necessary conversion. But, it is often a very worthwhile goal to integrate the complete chilled water system. Accomplishing any or all of the objec-

tives listed on page 12 is difficult, if not impossible, without this integration.

Control,Or Monitor,Trane Chillers From Non-Trane BAS

The "language and protocol" of both the CenTraVac UCP695 and SCP699 are unique. The reason for this has nothing to do with a desire to hold them "secret". Instead, it is a matter of cost. Communications from one microprocessor to another can be done in a variety of ways. Numerous standards exist. One such generic communication standard, for example, is commonly known as "RS232". Everyone familiar with personal computers has heard of "RS232". It could be used to handle all control communications as well.

However, RS232 requires considerable "translation" at both ends of the communications line. Translators are quite expensive, compared to the rest of the microelectronics apparatus in HVAC controls. Therefore, manufacturers normally do not incorporate them in their products. It represents an unnecessary cost burden, whereas the communications protocol Trane uses does not require a translator between microprocessors. The disadvantage, of course, is that the "conversation" is proprietary.

SCP699 is equipped with limited translator capabilities. It is able to communicate with generic control systems through the "generic interface" described on page 10. As indicated, this interface employs specific binary and analog signals, and does not use any particular microelectronics industry communication standard designation, such as RS232 or RS485. The SCP generic interface is a **control** interface, and is **not** intended as a **monitor** interface.

Control, through a generic interface, can be accomplished by:

a. *Use the SCP699 "generic interface" to permit non-Trane BAS to control*:

   (1) System enable/disable

   (2) Free-cooling enable/disable

   (3) Chilled water temperature (unit-level setpoints)

   (4) Current limit (unit-level setpoints)

Several methods permit "generic" **monitoring** of Trane chillers. To gain access to any of the existing CenTraVac control points (sensors), SCP699 must be used. Other monitoring is separate and does not involve either UCP695 or SCP699.

a. *Use Tracer 100 (or Tracer 1000) through SCP699 to output all monitored CenTraVac points through the Tracer RS232 port.*

b. *Use separate hardwired sensors to monitor parameters that are not monitored CenTraVac points.*

Index

Alarm 8,10,12,14
Algorithm 2
Auto 3,5
Automatic 9,10,13,17,18
Automation 10,11
BAS
  generic 3,8,10,13,14
  Trane 8,10,12
Communications 10,11,20,21
  bidirectional 20
  fail-safe 20
Condenser water 8,9,10,16
Controllers 2,3,9,10,17,18,19,20
  temperature 2,9,18,20
Controls
  operating 2
  panel 2,3,4,12,13,14,15,18,20
  safety 2
  temperature 2,6,8,9,10,18,19,20
Cooldown 4,5,6,8,10
Cooling tower 2,9,11
Free cooling 8,9,10
Ice 6,12,19,20
Interface 2,3,4,8,9,10,11,12,13,14,21
Limit
  condenser water 5,9
  current 5,6,8,10,11,14,215
  demand 5,8,11,14,15
Monitor 9,10,11,12,14,15,19,20,21
Multiple chillers 5,12,13,15,19
 parallel 16,17,18
 series 16,17,18
PC 14,15
Pump(s) 8,9,17,18
Remote 3,4,9,10,11,12,13,14,15,19
Reset 3,5,8,12,13,15,17,19
  ambient-based 7
  demand limit 14
  load-based 6
  negative 4
  temperature 3,6,13,14,16,18,19,20
Retrofit 12,20
RS232 20
RS485 20
Schedule 6,7,9,12,13,14
Sequencing 5,6,12,15,17,18
Slow-loading 4,6
Tracer Building Management Network 11,14,15

TRANE™

Operator's Guide

CVMA-OG-1B

Library	Service Literature
Product Section	Refrigeration
Product	Centrifugal Liq. Chiller, Water Cooled
Model	CVMA
Literature Type	Operator's Guide
Sequence	1B
Date	October 1987
File No.	SV-RF-CTV-CVMA-OG-1B-1087
Supersedes	CVMA-OG-1A (1/87)

SCP699 System Control Panel

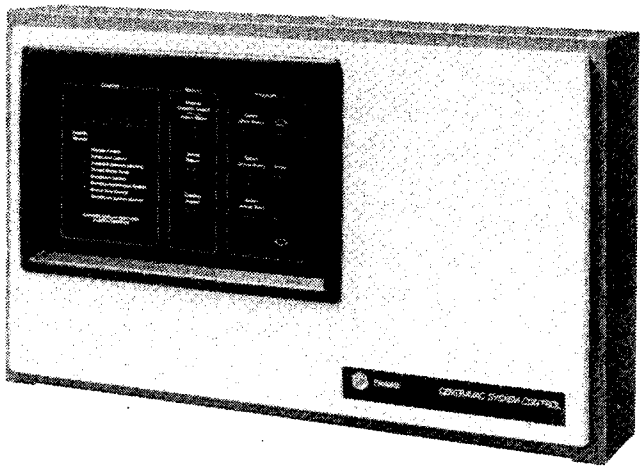

Art No.
RF/CTV-1900

Model CVMA 003

SCP699 System Control Panel for Use with
Model CVHE and CVHB CenTraVacs Equipped
with UCP695 Control Panels

Since The Trane Company has a policy of continuous product improvement, it reserves the right to change specifications and design without notice. The installation and servicing of the equipment referred to in this booklet should be done by qualified, experienced technicians.

Part No. X39640309-03

Table of Contents

Literature Change History

CVMA-OG-1 (October 1986)
Original issue of manual; provides start-up, operation, programming, maintenance and troubleshooting information for "A"-design CVMA System Control Panels (SCP699).

CVMA-OG-1A (January 1987)
Revised original manual to remove unnecessary cautions relating to shorted battery terminals from "Maintenance and Trouble Analysis" section; also corrected several typos.

CVMA-OG-1B (October 1987)
Revised CVMA-OG-1A to update SCP wiring requirements per UL. Also corrected the default setting for the free cooling chilled water setpoint (i.e., FC CWS default is 1 F, not 0 F).

3 **Model Number Description**

4 **General Information**
4 About this Manual
4 –Commonly Used Acronyms
4 –Warnings and Cautions
5 System Control Panel Overview

6 **Start-Up**
6 SCP699 DIP Switch Setup
8 Setup for SCP Condenser Relay Rotary Switches (Optional)
8 UCP695 DIP Switch Setup (Unit Address)
9 SCP/UCP Communication Check

10 **SCP699 Operator Interface**
10 Overview
10 "Display" Interface
10 –Alphanumeric Display
11 –Status Indicator Lights
12 "Report" Interface
12 –System (Status) Report
16 –Schedule Report
16 –Day/Time Report
16 –System Report
17 –Chiller Report(s)
19 "Program" Interface
21 –"Schedule" Program
21 —Schedule Setup
22 –"Day/Time" Program
24 —Day/Time Setup
24 –"System" Program
24 —System Setup: Chilled Water
26 —System Setup: Current
26 —System Setup: Freecool
26 —System Setup: Electrical Demand Limit
27 —System Setup: Chilled Water Reset
27 —System Setup: Cooldown Control
27 —System Setup: Control Gain
28 –"Chiller" Program
29 —Chiller Setup

31 **SCP Setup Recommendations for Typical Systems**
31 Remotely-Controlled SCP
31 Sample SCP Programs
32 –Example 1: 2 Parallel-Piped Chillers
33 –Example 2: 2 Series-Piped Chillers
34 –Example 3: 3 Parallel-Piped Chillers (Decoupled System)

35 **SCP699 Operation**
35 Overview
39 System Chilled Water Temperature Control
41 –Chiller Start-Up and Shutdown
41 –Temperature Control Near Setpoint
41 –Internal (Fast) Cooldown
41 System Current Limit Control
43 Chiller Sequencing and Rotation
43 Cooldown Control
44 Chilled Water Reset
46 –Load-Based CWR
48 –Ambient-Based CWR
48 —"Normal" CWR
50 —"Reverse" CWR
52 Free Cooling
55 –Manual Free Cooling
56 –Automatic Free Cooling
56 —Thermostatically-Controlled FC
57 —On/Off FC
57 Trane BAS Interface
58 Electrical Demand Limiting
58 –Watt-Hour Meter/Pulse Initiator Selection
60 –Determining Electrical Demand Limit Settings
61 Evaporator Water Pump Control
63 –System Pump
63 –Chiller Pumps
63 Condenser Water Pump Control
63 Generic BAS Option
66 –Unit Chilled Water Setpoints
68 –Unit Current Limit Setpoints
68 Condenser Limit Option

70 **Maintenance and Trouble Analysis**
70 Periodic Maintenance
70 –Weekly Checks
70 –Monthly Checks
70 Power Failures
70 Trouble Analysis
70 –Error Detection
71 –Troubleshooting Charts

73 **SCP Operator Reference Guide**

The Trane Company
La Crosse, Wisconsin 54601-7599
Printed in U.S.A.

©American Standard Inc. 1987

Model Number Description

All standard Trane products are identified by a multiple-character model number that precisely identifies a particular type of unit. An explanation of the alphanumeric identification code used with CenTraVac SCP699 System Control Panels is provided below. Its use will enable the owner/operator to define the components, operation and options for a particular unit.

Be sure to refer to the model number stamped on the unit nameplate (shown below, and mounted on the bottom of the panel) when ordering replacement parts or requesting service.

CVMA Nameplate (for SCP699 System Control Panels)

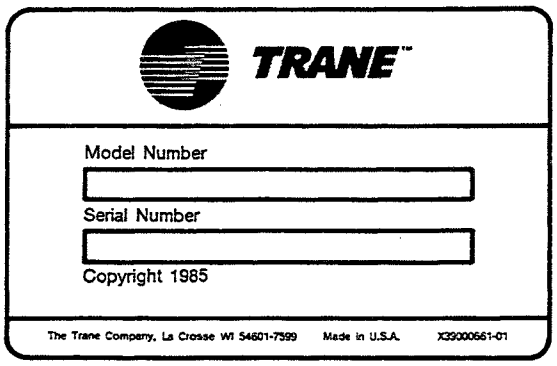

Drwg. X39000661

Model No. CV M A - 003 N - A A - A

Digit No.	1,2	3	4	5,6,7	8	9	10	11

Digits 1, 2
CenTraVac

Digit 3
Multiple

Digit 4
Development Sequence

Digits 5, 6, 7
Capacity (No. of Units Controlled)
003 = 1, 2 or 3 Units

Digit 8
Electrical Characteristics
N = 98-132 VAC, 50-60 Hz

Digit 9
Microprocessor Control

Digit 10
Design Sequence

Digit 11
Sideboard Option
0 = No Sideboard Installed
A = Sideboard Installed (w/Generic BAS and/or Condenser Limit Control)

General Information

Literature Change History

CVMA-OG-1 (October 1986)
Original issue of manual; provides start-up, operation, programming, maintenance and troubleshooting information for "A"-design Model CVMA System Control Panels (i.e., SCP699).

CVMA-OG-1A (January 1987)
Revised original manual to remove unnecessary cautions relating to shorted battery terminals from "Maintenance and Trouble Analysis" section; also corrected several typos.

About this Manual

This booklet describes the proper start-up, operation and programming procedures for Model CVMA CenTraVac System Con trol Panels (i.e., SCP699). By carefully reviewing this information and following the instructions given, the owner/ operator can successfully use the SCP699 panel to govern up to 3 CVHE or CVHB chillers equipped with UCP695 control panels.

A "Maintenance and Trouble Analysis" section at the end of this manual describes the minimal maintenance requirements associated with the SCP, and provides troubleshooting information for system-level diagnostic conditions. (Refer to the chiller operation/ maintenance manual when troubleshooting unit-level diagnostic conditions.)

If equipment problems do occur, however, contact a qualified service organization to ensure proper diagnosis and repair.

Notice that an "SCP Operator Reference Guide"–summarizing SCP report and programming menus–is provided at the back of this booklet, and is designed to aid the experienced SCP operator.

Note: To ensure that this operator's guide remains with the SCP once it is installed, store it behind the panel. Rails are mounted on the back of the panel enclosure (i.e., at the top and bottom) for this purpose.

Commonly Used Acronyms

For convenience, the Model CVMA SCP699 System Control Panel is referred to simply as the "SCP" or "SCP699 panel" throughout the rest of this manual.

Other acronyms that appear in this operator's guide are listed (alphabetically) and defined below.

BAS = Building Automation System
BCL = Bidirectional Communication Link

CLS = Current Limit Setpoint
CWR = Chilled Water Reset
CWS = Chilled Water Setpoint

FC = Free Cooling

I/O = Input and Output Wiring

NEC = National Electric Code

RLA = Rated Load Amps
RSCWS = Reset System Chilled Water Setpoint

SCLS = System Current Limit Setpoint
SCWS = System Chilled Water Setpoint

Tracer = Type of Trane building automation system (BAS) frequently used to govern chiller system operation via an SCP.

UCLS = Unit Current Limit Setpoint
UCP695 = Microcomputer-based Chiller Control Panel
UCWS = Unit Chilled Water Setpoint

Warnings and Cautions

Notice that **warnings** and **cautions** appear at appropriate intervals throughout this manual. **Warnings** are provided to alert operating and service personnel to potential hazards that could result in personal injury or death, while **cautions** are designed to alert personnel to conditions that could result in equipment damage.

Your personal safety and the proper operation of this system depend upon the strict observance of these precautions.

Figure 1
SCP699 Panel Operator Interface

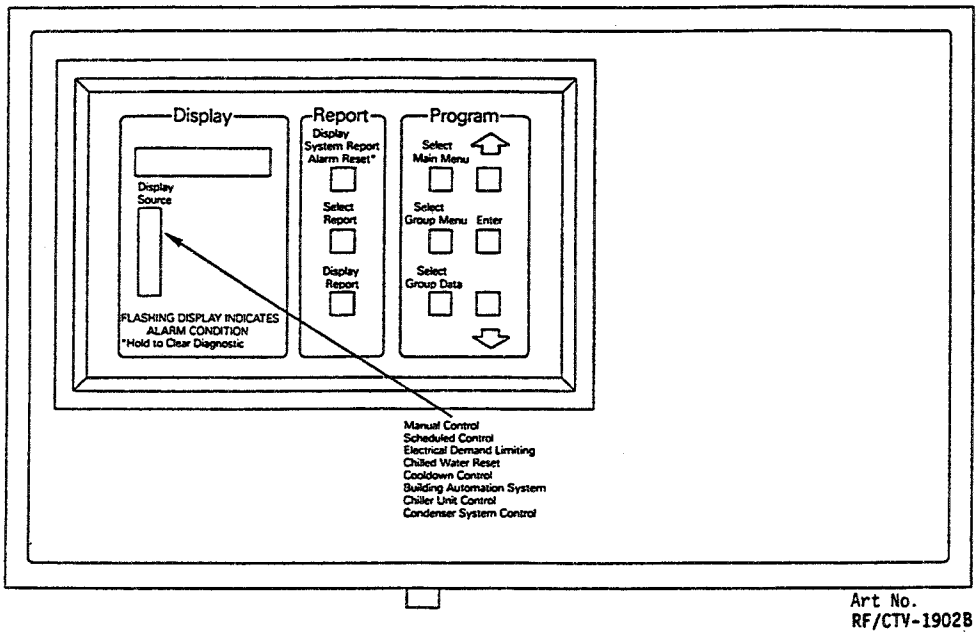

Art No.
RF/CTV-1902B

SCP699 System Control Panel Overview

The Trane CenTraVac SCP699 System Control Panel (Figure 1) is a computerized, operator-programmable control system intended to operate 1, 2 or 3 centrifugal water chillers as a single system. It is specifically designed for use with Model CVHE or CVHB units equipped with microcomputer-based UCP695 control panels.

Among the standard capabilities of the SCP699 System Control Panel are these:

[ ] a "user interface" that gives the operator access to data available within the chiller system;

[ ] coordinated control--including lead/lag sequencing--of up to 3 CenTraVac chillers with UCP695 control panels (i.e., 3 chillers piped in parallel; 2 chillers piped either in series or parallel);

[ ] maintains system chilled water temperature by regulating chiller loading to meet building cooling requirements;

[ ] scheduled system operation on a 7-day, 24-hour basis, plus holiday scheduling;

[ ] "soft loading"/cooldown control (i.e., to minimize electrical demand peaks);

[ ] system chilled water reset;

[ ] electrical demand limit control;

[ ] a proprietary, bidirectional communications link (i.e., to connect the SCP699 panel with a Tracer® building automation system);

[ ] manual chiller control from a central location; and,

[ ] control of these auxiliary chiller system components:

a. up to 4 chilled water pumps (i.e., 3 for individual chillers plus 1 system pump), and,

b. condenser water pumps (i.e., via the chiller UCP695 control panels).

Several SCP699 control options are also available; these include:

[ ] cooling tower 2-stage limit control;

[ ] thermostatically-controlled, automatic free cooling control; and,

[ ] an analog interface that allows an external analog controller or generic BAS to govern chiller operation.

Refer to the "Operation" section of this manual for explanations of each of the standard and optional SCP699 capabilities outlined above.

For an illustration of a typical SCP699 System Control Panel application, see Figure 2.

Figure 2
Typical SCP699 Application (w/Trane Building Automation System)

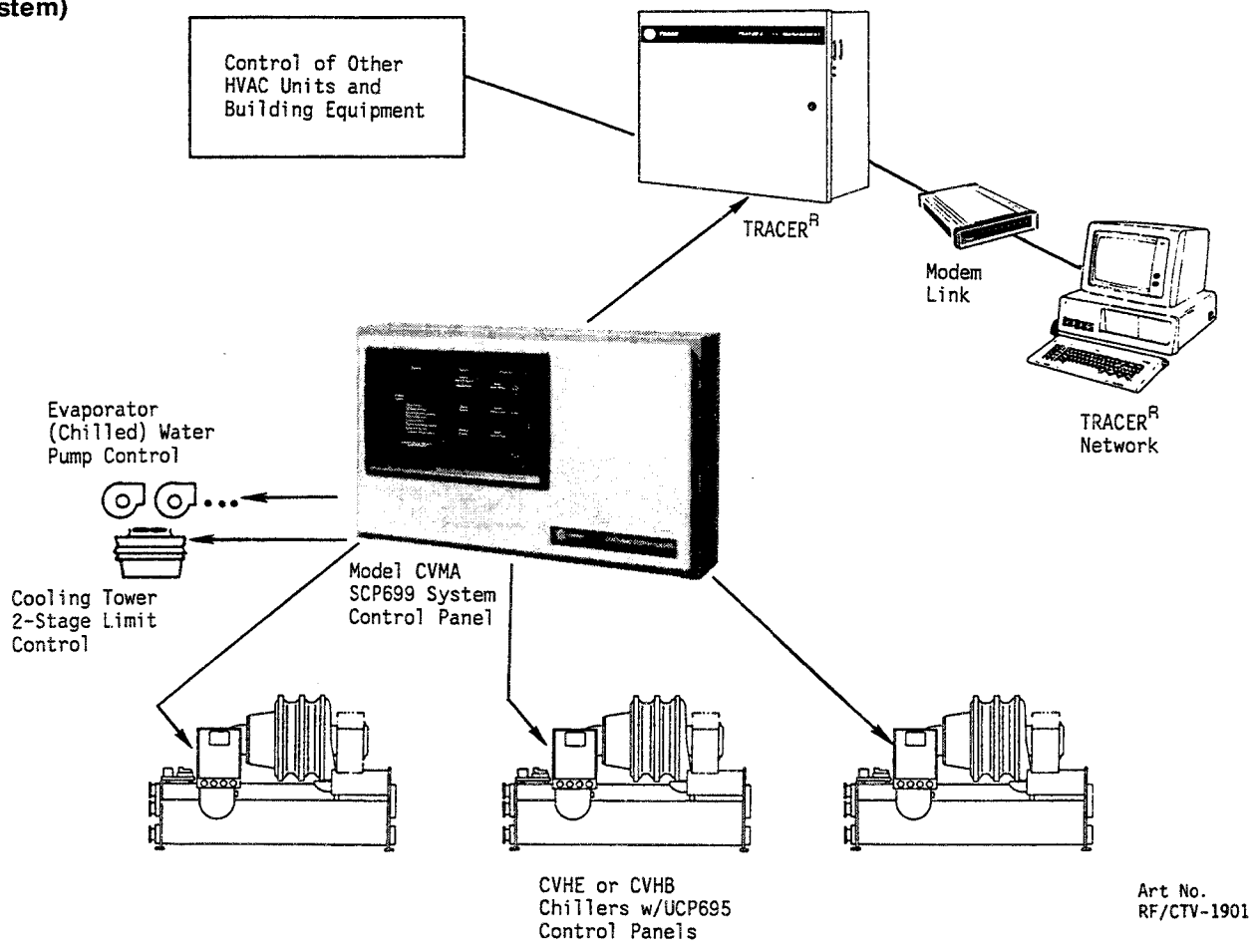

After the SCP699 panel is properly installed, several switches–both in the SCP699 and at each of the chiller UCP695 control panels–must be set up before the system is started. Follow the step-by-step instructions provided below.

SCP699 DIP Switch Setup

WARNING: To prevent injury or death due to electrical shock, lock power supply disconnect open before removing SCP panel enclosure. It may be necessary to open several disconnects to remove all connected power from SCP.

1. Remove the 5 screws that secure the control panel enclosure to the panel back plate; then remove the enclosure from the SCP699.

2. Find the SCP699 configuration switches; see Figure 3. (These switches–numbered 1 through 10–are located to the right of the "Program" block, directly above terminal strip TB2.)

Note: Notice that 2 additional configuration switches are located on the SCP's sideboard. (The optional sideboard is provided whenever the generic BAS or condenser control options are specified.)

3. Refer to Table 1; notice that 11 of the 12 "configuration" DIP switches must be properly set at either ON or OFF. Each of these switch settings is discussed briefly below (i.e., and summarized in Table 1).

a. Pump Relay Command. To ensure proper operation of the system and unit chilled water pumps, DIP Switch No. 1 must be set in the OFF (i.e., "normal") position.

b. Alarm Relay. With DIP Switch No. 2 set at the OFF (i.e., "normal") position, the alarm relay is normally de-energized, and will energize when an alarm condition occurs.

Conversely, the alarm relay is normally energized when DIP Switch No. 2 is in the "reverse" (i.e., ON) position, and will de-energize when an alarm condition is detected.

c. Degrees F/C Display. The position of DIP Switch No. 3 determines what units the SCP will use to display temperatures. Degrees Fahrenheit (F) are displayed when DIP Switch No. 3 is in the OFF position. With this switch set at ON, temperatures are displayed in degrees Centigrade (C).

d. Chilled Water Reset (CWR). DIP Switch No. 4's position determines how the SCP will calculate a new system leaving chilled water temperature using its chilled water reset control function.

Figure 3
SCP699 Terminal Strip Connections

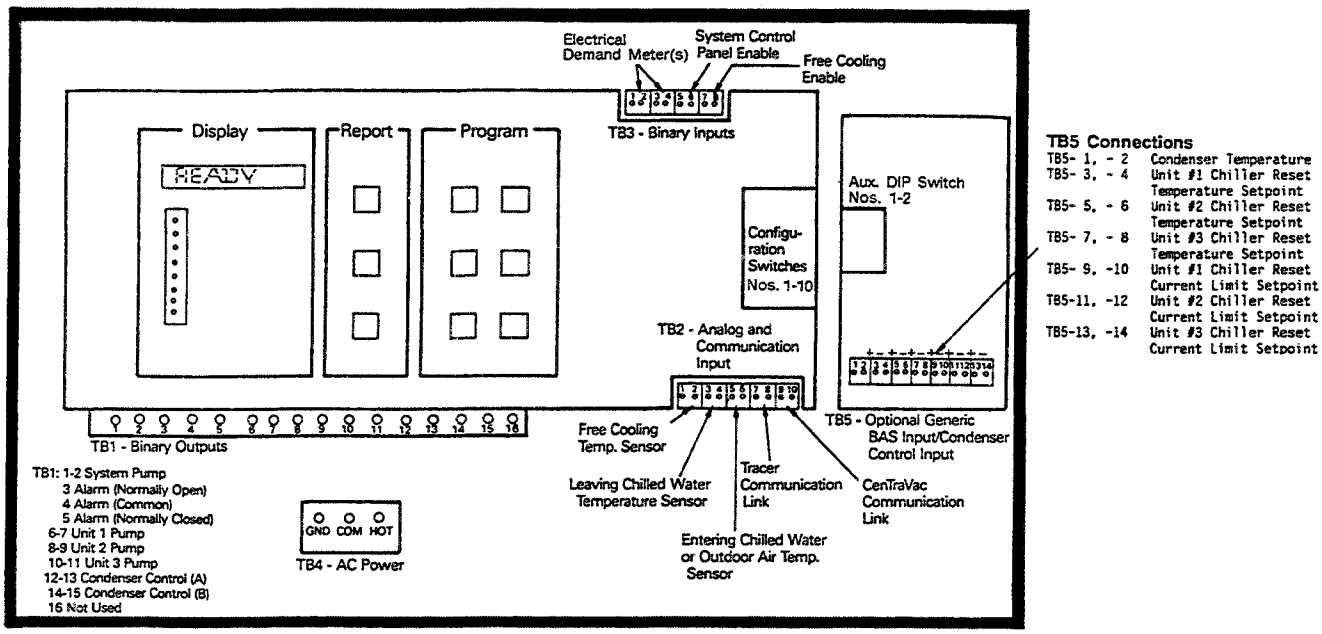

Note: Run the wires for all TB2, TB3 and TB5 connections through the low voltage conduit.

Art No.
RF/CTV-1903

Whenever the CWR setpoint (i.e., "SET = ") is ≤ 25 F, the SCP uses the following load-based equation to determine the reset system chilled water setpoint whether DIP Switch No. 4 is set at OFF or ON.

RSCWS =
SCWS + RATE [CWR SET + STMP - AUXTMP]

where:
RSCWS = Reset System Chilled Water Setpoint
SCWS = Sched./BAS System Chilled Water Setpoint
RATE = Operator-Set CWR Rate
CWR SET = Operator-Set CWR Setpoint Temp.
STMP = Actual Lvg. Chilled Water Temp.
AUXTMP = Actual Ent. Chilled Water Temp.

If the CWR setpoint temperature is > 25 F, then chilled water reset is solely a function of outdoor ambient temperature. When DIP Switch No. 4 is set at OFF (i.e., "normal"), the SCP uses this equation to calculate a new chilled water setpoint:

RSCWS = SCWS + RATE [CWR SET - AUXTMP]

Setting DIP Switch No. 4 at ON (i.e., "reverse") when the CWR setpoint is > 25 F causes the SCP to determine a new chilled water setpoint with this equation:

RSCWS = SCWS + RATE [AUXTMP - CWR SET]

Note: Control logic prevents the SCP from establishing a reset chilled water setpoint that is lower than the original value.

See "Chilled Water Reset" in the SCP699 Operation section of this manual for a further explanation of the CWR control function.

e. BCL Address. DIP Switch Nos. 5, 6, 7, 8 and 9 are used to "tag" the SCP699 panel with an identification number, and are not used unless the SCP is connected to a Trane BAS (i.e., building automation system [Tracer®]).

For your reference, the DIP switch positions corresponding to SCP address numbers of 0 through 31 are provided in Table 2.

Note: "BCL" is used throughout this manual to represent the "bidirectional communication links" that enable the SCP to exchange data with the UCP695 chiller control panels and a Trane BAS.

f. DIP Switch No. 10 is not used, so either switch position (i.e., ON or OFF) is permissible.

g. Condenser Limit Enable. To enable the SCP's optional condenser limit control function, sideboard DIP Switch No. 1 must be positioned at ON. (Field-installation of up to 3 condenser refrigerant temperature sensors is also required; see "Condenser Limit Option" on page 68.)

h. Generic BAS Enable. Positioning sideboard DIP Switch No. 2 at ON allows a generic BAS to interface with the SCP.

Note: Enabling the generic BAS option disables a number of standard SCP control functions; see "Generic BAS Option" on page 63 of this manual.

Table 1
SCP699 "Configuration" Switch Settings (1,4)

DIP Switch No.	DIP Switch Function	Switch Position ON	OFF
1	Pump Relay Command (2)	Service	Normal
2	Alarm Relay	Reverse (NC)	Normal (NO)
3	Degrees F/C Display	Degrees C	Degrees F
4	Chilled Water Reset Mode (3)	Reverse	Normal
5, 6, 7, 8, 9	Address for Bidirectional Communication Link (BCL) with Trane BAS	See Table 2 for DIP switch settings.	
10	Not Used	Either switch position is acceptable.	
1 (Aux.)	Opt. Condenser Limit Control (4)	Enabled	Disabled
2 (Aux.)	Opt. Generic BAS Interface (4)	Enabled	Disabled

Notes:
1. This illustration represents the SCP699 panel's 10 standard "configuration" DIP switches; refer to Figure 3 for their relative location in the panel.

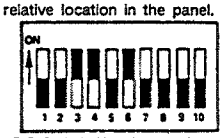

2. Standard "configuration" DIP Switch No. 1 must be positioned at OFF (i.e., normal) to ensure proper chilled water pump operation.
3. The SCP assumes load-based chilled water reset operation when the CWR setpoint is ≤ 25 F, and ambient-based CWR when the CWR setpoint is > 25 F. Control logic for either type of CWR always results in a system chilled water setpoint that is ≥ the scheduled (or Tracer-issued) setpoint.
4. Auxiliary DIP Switch Nos. 1 and 2 are located on the SCP's optional sideboard; Figure 3 indicates their relative location.

Setup for SCP Condenser Relay Rotary Switches (Optional)

When equipped with the condenser option, a "condenser water control/generic BAS analog interface" sideboard is factory-installed inside the SCP's panel enclosure. Four rotary-type switches on this sideboard allow the system operator to set up "open" and "close" values for the contacts of Condenser Relays A (CRA) and B (CRB).

For an explanation of the condenser limit control function--along with an illustration of the sideboard, and available rotary switch settings--see "Condenser Limit Option" (page 68).

UCP695 DIP Switch Setup (Unit Address)

WARNING: To prevent injury or death due to electrical shock, always open unit disconnect switch before opening control panel door.

Each UCP695 chiller control panel connected to the SCP699 must be "tagged" with its own unique address (i.e., either "1", "2" or "3"). This address number is assigned by setting DIP Switch Nos. 1 through 5 on switch block S11.

To access DIP switch block S11, open the unit control panel door and remove the access cover strip located at the top of the micro module. See Figure 4. Notice that S11 is located in the upper left-hand corner of micro module 1U3.

Caution: To ensure proper chiller operation, never tamper with any UCP695 controls located behind panel door without first consulting a qualified service technician.

Refer to Table 3 for S11 DIP switch settings. Since no more than 3 chillers can be connected to any one SCP699 panel, only 3 addresses/switch combinations are listed.

Remember that all chillers communicating with an SCP must have separate, unique addresses. If 2 or more units connected to an SCP share the same address--or if a unit is tagged with an address other than "1", "2" or "3"--communications are automatically terminated.

Note: When only 1 chiller is connected to the SCP--and the SCP's system leaving chilled water temperature sensor is not installed, that unit must be given a chiller address of "1". The SCP will not govern system operation if the S11 DIP switches are "configured" to any other address number!

Table 2
BCL Address/DIP Switch Settings for SCP699 Panel (See Note 1)

SCP699 "Configuration" DIP Switch Nos.					Corresponding SCP Address
No. 5	No. 6	No. 7	No. 8	No. 9	
ON	ON	ON	ON	ON	0
ON	ON	ON	ON	OFF	1
ON	ON	ON	OFF	ON	2
ON	ON	ON	OFF	OFF	3
ON	ON	OFF	ON	ON	4
ON	ON	OFF	ON	OFF	5
ON	ON	OFF	OFF	ON	6
ON	ON	OFF	OFF	OFF	7
ON	OFF	ON	ON	ON	8
ON	OFF	ON	ON	OFF	9
ON	OFF	ON	OFF	ON	10
ON	OFF	ON	OFF	OFF	11
ON	OFF	OFF	ON	ON	12
ON	OFF	OFF	ON	OFF	13
ON	OFF	OFF	OFF	ON	14
ON	OFF	OFF	OFF	OFF	15
OFF	ON	ON	ON	ON	16
OFF	ON	ON	ON	OFF	17
OFF	ON	ON	OFF	ON	18
OFF	ON	ON	OFF	OFF	19
OFF	ON	OFF	ON	ON	20
OFF	ON	OFF	ON	OFF	21
OFF	ON	OFF	OFF	ON	22
OFF	ON	OFF	OFF	OFF	23
OFF	OFF	ON	ON	ON	24
OFF	OFF	ON	ON	OFF	25
OFF	OFF	ON	OFF	ON	26
OFF	OFF	ON	OFF	OFF	27
OFF	OFF	OFF	ON	ON	28
OFF	OFF	OFF	ON	OFF	29
OFF	OFF	OFF	OFF	ON	30
OFF	OFF	OFF	OFF	OFF	31 (2)

Notes:
1. "Configuration" DIP switch nos. 5 thru 9 are only used to establish a bidirectional-communication-link (BCL) address when the SCP699 panel is connected to a Trane building automation system.
2. When connected to a Tracer 100 system, the SCP's address must be "31".

SCP/UCP Communication Check

Once DIP switch setup at the SCP and chillers is complete, verify that the SCP is communicating with each of the chillers.

1. Adjust the chiller switch on each UCP695 chiller control panel to the "Standby/Reset" position.

2. Apply power to each of the UCP695 panels; then power up the SCP. (It will be necessary to close several disconnect switches.)

Operating codes A 88 and A 0, respectively, should appear on the UCPs, and the "READY" message should be displayed at the SCP.

3. Display the SCP's preformatted "Chiller" report.

To do this:

a. press the "Select Report" key (Figure 1) until "CHILLER" appears on the display; then,

b. press the "Display Report" push button. The SCP should now display the operating status of each connected chiller (i.e., UNIT 1, UNIT 2, UNIT 3).

Communication has not been established with a chiller if it is omitted from this report. If this occurs, refer to "Troubleshooting Charts" on pages 71 and 72 of this manual.

* * * * *

Note: Once you have successfully verified communication between the SCP and chillers, adjust the chiller switch on each UCP695 panel to the "Auto/Remote" position before programming the SCP.

Figure 4
UCP695 Chiller Control Panel Layout

Legend
1C1 = Oil Pump Capacitor
1DL2 = Sump Vent-Line Interval Timer (CVHEs Only)
1F1 = Oil Pump Fuse
1J* = Post Header Power Supply Jacks
1K8 = Oil Pump Starter Relay
1K9 = Oil Tank Heater Relay
1K15 = Hot Gas Bypass Relay (Opt.)
1K16 = Chilled Water Pump Relay
1K17 = Condenser Water Pump Relay
1P* = Post Header Power Supply Plugs
1R1 = Condenser Pressure Transducer
1S1 = Condenser High Pressure Switch
1S2 = Differential Pressure Switch
1T1 = Power Supply Transformer
1TB* = Terminal Blocks
1U1 = Relay Output Module
1U2 = Power Supply Output Module
1U3 = Micro Module

DIP Switch Blocks:
S1 = RLA Setpoint
S3 = Max. Acceleration Time, Frequency, Phase Imbalance/Surge Protection
S9 = Unit I.D., Temperature Range, Units-of-Measure
S11 = Unit Address

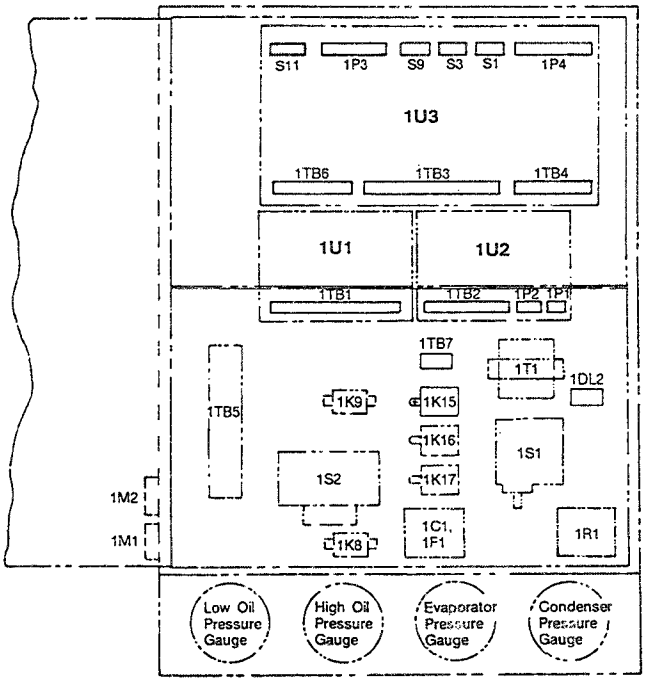

Drwg. 4532-4747C

Table 3
S11 Chiller Address Setup for UCP695 Control Panel (See Notes)

UCP695 S11 DIP Switch Nos. (See Figure 4)					Corresponding Chiller Address
No. 1	No. 2	No. 3	No. 4	No. 5	
ON	ON	ON	ON	OFF	1 (3)
ON	ON	ON	OFF	ON	2
ON	ON	ON	OFF	OFF	3

Notes:
1. No more than 3 chillers can be connected to any one SCP699 panel.
2. All chillers communicating with an SCP must have separate, unique addresses. If 2 or more units connected to an SCP share the same address, communications are automatically terminated.
3. In single-chiller system applications, that unit must be assigned an address of "1" if the SCP's system leaving chilled water temperature sensor is not installed. If any other unit address is assigned, the SCP will not govern system operation.

SCP699 Operator Interface

Overview

The operator interface portion of the SCP699 panel is comprised of an 8-character, alphanumeric display, 8 status indicator lights, and 9 pushbutton switches. All of these devices are accessible without removing the panel front cover. See Figure 1.

Notice that the SCP interface is divided –by function–into 3 groups of related elements:

[ ] the **Display** group, which consists of the 8-character, alphanumeric display and 8 system status indicator lights;

[ ] the **Report** group, which consists of 3 pushbuttons (i.e., "Display System Report/Alarm Reset*", "Select Report" and "Display Report"); and,

[ ] the **Program** group, which consists of these 6 pushbutton switches–"Select Main Menu", "Select Group Menu", "Select Group Data", " ↑ " (increase), "Enter" and " ↓ " (decrease).

Each of these categories is described in detail in the following paragraphs.

"Display" Interface (Figure 5)

Alphanumeric Display

An 8-character, alphanumeric, vacuum-fluorescent display is provided in the horizontal window of the SCP's "Display" block. It allows the operator to:

[ ] check the current system operating status;

[ ] program or display system and individual chiller operating parameters; and,

[ ] view a number of preformatted system and chiller status reports.

Four 1-line messages automatically appear on the display to indentify the present system operating status:

1. **READY** (i.e., no cooling operations are scheduled; or, the SCP is unable to issue chiller control information).

2. **STARTING** (i.e., the SCP is attempting to start a chiller).

3. **INHIBIT** (i.e., the SCP is attempting to bring a chiller on-line, but can't because the unit's restart inhibit period has not yet expired).

4. **COOLING** (i.e., displayed when none of the conditions described in Items 1 through 3 exist).

Figure 5
SCP "Display" Interface

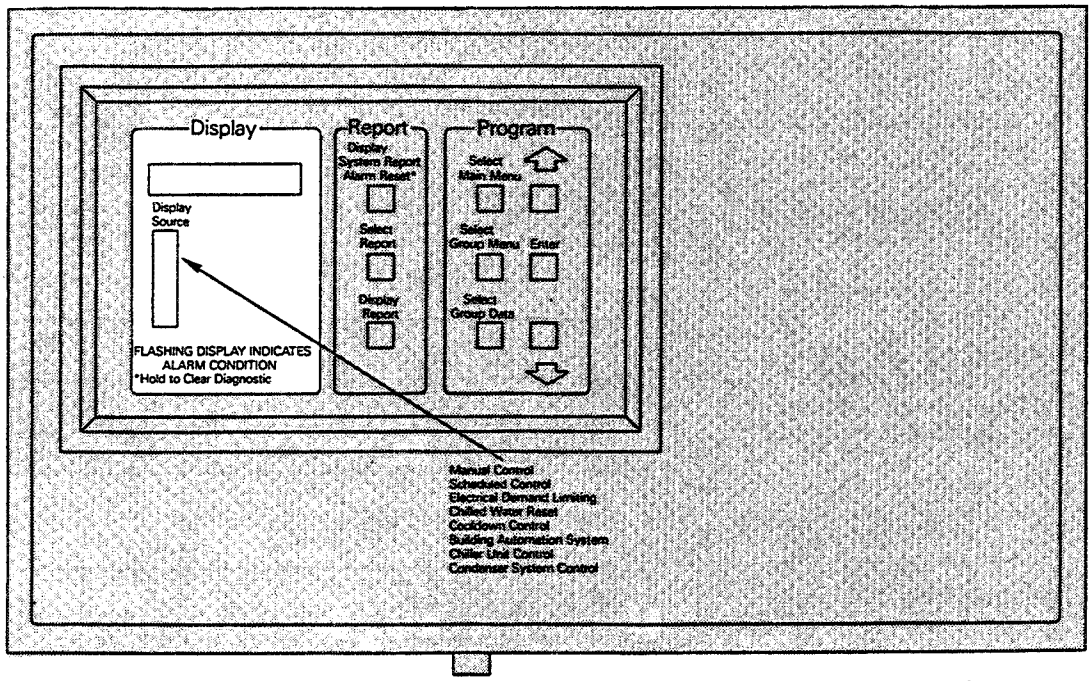

Art No.
RF/CTV-1902B

Note: If the SCP detects an error at the system level, it flashes the system status message appearing on the alphanumeric display and energizes the alarm relay until the "Display System Report/Alarm Reset*" button is pressed. (See Table 4 in "Report Interface" for a list of system-level diagnostic codes and corresponding errors.)

In addition to the 4 system status messages, a number of reports and programming entries can be read in the alphanumeric display window. Since the display is limited to 8 characters, a number of these entries consist of 2 or 3 lines that appear one at a time. For instance, the chilled water reset setpoint is a 2-line display that appears as "RESET", then "TEMP = 48"; the "Chilled Water Reset" status indicator light also illuminates while these entries are displayed.

Note: An "ERROR" message momentarily appears on the alphanumeric display if any of these keys are pressed while the system status message is shown–

[ ] the "Display Report" key;
[ ] the "Select Group Menu" key;
[ ] the " ↑ " (increase) key;
[ ] the "Enter" key; and,
[ ] the " ↓ " (decrease) key.

The present system status message then returns to the display.

If the "Select Group Data" key is pressed while the system status message is displayed, the SCP will test all segments and characters of its alphanumeric display by illuminating "********" for 1 second, followed by "0,0,0,0,0,0,0,0," for 1 second. (Notice that all status indicator lights also illuminate during this 2-second test.) The current system status message returns to the display once the 2-second display check is complete.

For more specific information about the alphanumeric displays used in the SCP's reports, see "Report Interface". The "Program Interface" section of this manual describes the alphanumeric displays that will appear while programming the SCP699 panel.

Status Indicator Lights

A series of 8 status indicator lights are also located in the SCP's "Display" block, directly below the horizontal alphanumeric display window. These blue lights–along with the information presented on the 8-character display–allow the operator to monitor system operation. The purpose of each status indicator light is described below.

Note: No more than 1 status indicator light is ever illuminated at any given time (i.e., unless the SCP malfunctions). If the value of a displayed operating parameter is derived from more than 1 control function, the illuminated status light indicates which control function influenced that value last.

[ ] Manual Control. Illumination of this light indicates that the operating parameter appearing on the alphanumeric display was manually set at the SCP and is not a "scheduled" system setpoint.

[ ] Scheduled Control. This light only illuminates when the operating parameter appearing on the alphanumeric display was established with the SCP's schedule function (i.e., consisting of a 7-day operating list of system chilled water setpoints and "setback" times).

[ ] Electrical Demand Limiting. Illumination of this status light indicates that the displayed operating parameter was established with the SCP's electrical demand limit function.

[ ] Chilled Water Reset. When this light glows, the displayed operating parameter was established with the SCP's chilled water reset function.

[ ] Cooldown Control. The operating parameter that appears on the alphanumeric display while this status light is on was established with the SCP's cooldown control function.

[ ] Building Automation System. Illumination of this light indicates that the displayed operating parameter was set at the building automation system (BAS) level.

[ ] Chiller Unit Control. This status indicator light illuminates whenever the operating parameter shown on the alphanumeric display is governed by the UCP695 control panel of that particular chiller (i.e., Unit 1, Unit 2 or Unit 3).

[ ] Condenser System (Limit) Control. When this status indicator light is on, the displayed operating parameter (i.e., refrigerant temperature differential between the evaporator and condenser [HEAD]; or, the common entering condenser water–or outdoor ambient–temperature [TEMP]) is being monitored by the SCP as a part of the optional condenser limit control function.

"Report" Interface (Figure 6)

Use of the 3 push buttons in the SCP's "Report" block enables the operator to view as many as 7 preformatted status reports (i.e., 4 system reports, and up to 3 chiller reports).

Each of these reports are described briefly in the following paragraphs; for a summary of SCP report access and contents, refer to the flow chart in Figure 7.

System (Status) Report

Pressing the "Display System Report/ Alarm Reset*" push button allows the operator to sequentially view the system operating parameters–itemized below–on the alphanumeric display.

Notice that the SCP automatically advances from one system status report entry to the next; after the last entry appears, the present system status (e.g., READY, COOLING, INHIBIT, etc.) returns to the display.

When applicable, a status indicator light also illuminates, enabling the operator to determine the source of the displayed characteristic.

Note: Each system status report entry below appears as it does on the SCP699 alphanumeric display.

1. System Chilled Water Temperature and Setpoint. This 4-line report entry indicates:

a. the temperature registered by the SCP sensor field-installed in the common system leaving chilled water line; and,

b. the "active" system chilled water temperature setpoint. Illumination of the appropriate status indicator light identifies the source of this setpoint (e.g., manual control, scheduled control, chiller unit control, etc.).

Note: If the SCP controls only a single chiller–and a system temperature sensor is not installed, "UNIT 1" is substituted for "SYSTEM" throughout the report. Also, the "FREECOOL" message appears on the display in lieu of a setpoint value if the system is presently operating in the automatic free cooling mode.

Following is the format used to display this information:

SYSTEM (or UNIT 1)
CHLD. WTR.
TEMP = (0 to 99 F)

SET = (OFF, or 1 to 99 F)

or

FREECOOL

Figure 6
SCP "Report" Interface

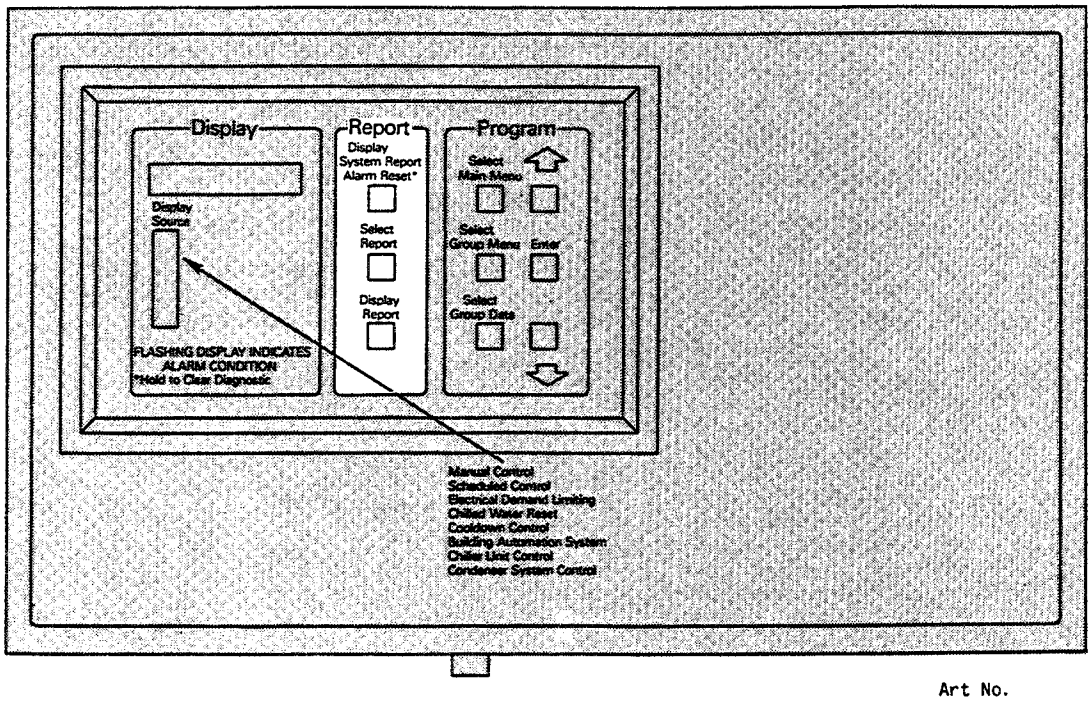

Art No.
RF/CTV-1902B

Figure 7
Preformatted SCP Reports

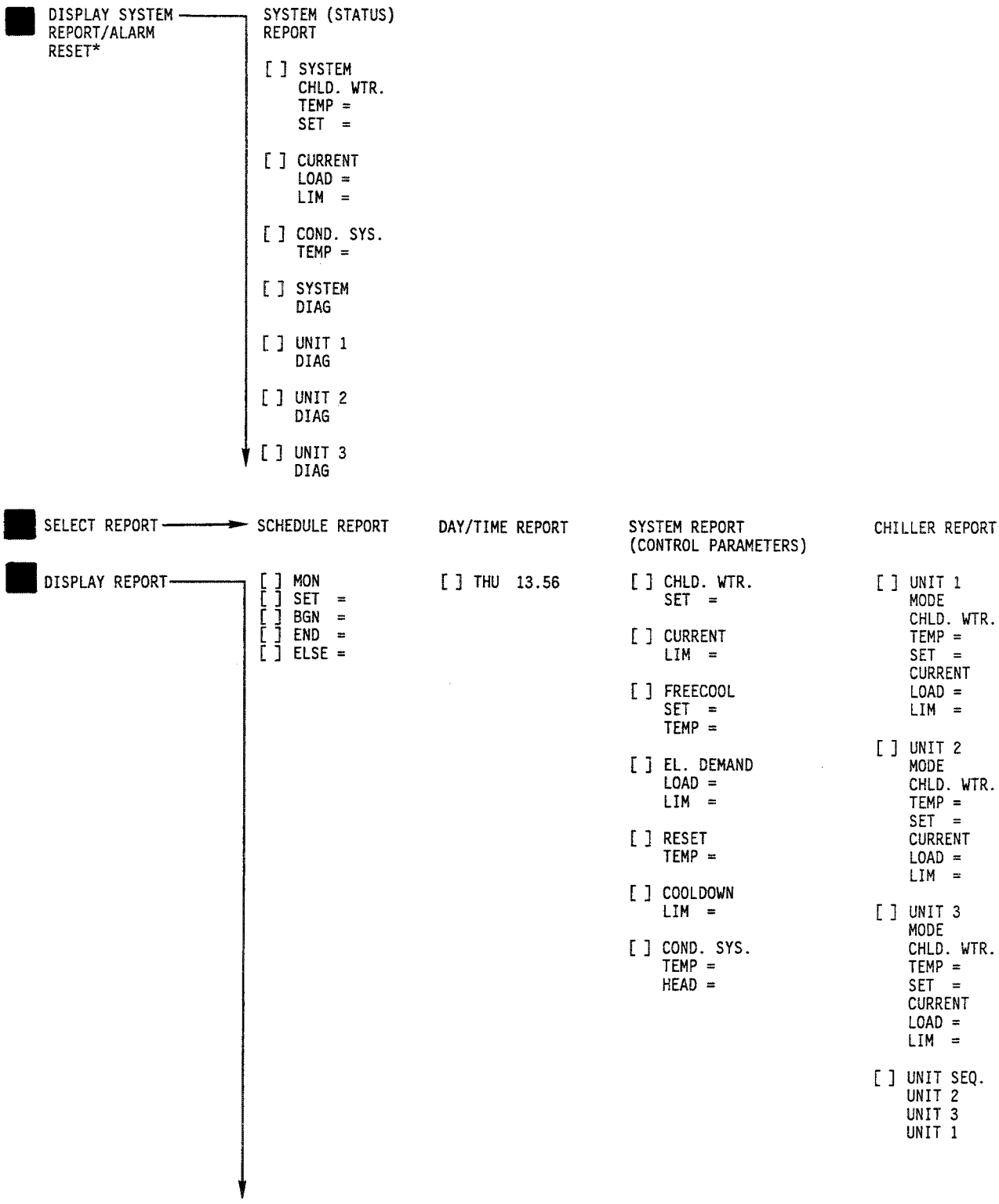

2. System Current Load and Limit. This 3-line report entry displays the following information:

a. the present electrical load (i.e., percent of total chiller rated load amps [RLA]).

b. the "active" system current limit setpoint. Illumination of the appropriate status indicator light indicates the source of this setpoint (e.g., manual control, scheduled control, chiller unit control, etc.).

This data appears in the following format:

CURRENT
LOAD = (0 to 100%)
LIM = (0 to 100% system RLA)

3. Condenser System Temperature. This 2-line report entry indicates the temperature registered by the optional sensor installed in either the common, system entering-condenser water line, or the outdoor ambient. Notice that the "Condenser System Control" status indicator light is illuminated while this report entry is displayed.

This format is used to display the system condenser return water temperature:

COND. SYS.
TEMP = (0 to 140 F; default is 0 F)

"COND. SYS. TEMP = 0" only occurs if the optional condenser water temperature sensor is "open" or not installed.

4. System (or Unit) Diagnostic. This 2-line entry reports the last abnormal condition that was detected at a system or unit level, and was recorded as an error in the SCP's memory.

Following are the formats used to display the last recorded system or unit diagnostic:

SYSTEM
DIAG (see Table 4)
and/or
UNIT 1
DIAG (see Table 5)
and/or
UNIT 2
DIAG (see Table 5)
and/or
UNIT 3
DIAG (see Table 5)

If no diagnostic code was recorded, the system status message returns to the display immediately after the condenser system temperature (see Item 3) is indicated.

Note: To remove the last recorded diagnostic code from the SCP's memory, simply press the "Display System Report/ Alarm Reset*" key and hold it down while the system status report is displayed. After the "SYSTEM (and each UNIT) DIAG " entry appears, the SCP generates a "CLEARED" message. The current system operating status then returns to the display.

Each error condition is represented by a 2-character code. See Table 4 for system-level diagnostic codes; unit-level diagnostic codes are listed in Table 5.

Notice that detection of a system-level diagnostic (other than D9)–or a latching chiller-level diagnostic–causes the SCP to flash the alphanumeric display and energize a customer-supplied and -installed alarm device connected to the SCP's alarm relay. This display will flash (and the alarm relay remain energized) until the "Display System Report/Alarm Reset*" button is pressed.

Table 4
SCP699 System Diagnostic Codes (See Note)

2-Digit Code	Description of Diagnostic Condition
AA	System Leaving Water Temperature Sensor (1,3)
DF	Communications Failure (1,3)
D9	Power Loss (Program Retained) (2,3)
EF	Power Loss (Program Lost) (1,3)
FF	System Control Module (1,3)

Notes:
1. Detection of 1 of these 4 system-level diagnostic conditions causes the alphanumeric display to flash and energizes the alarm relay. To reset the alarm relay–and stop the display from flashing, press the "Display System Report/Alarm Reset*" button.
2. Detection of the "D9" system-level diagnostic causes the SCP to flash its alphanumeric display; however, the alarm relay is not energized.
3. To remove the last recorded diagnostic code from the SCP's memory, press the "Display System Report/Alarm Reset*" button and hold it down while the system status report is displayed. After "SYSTEM DIAG = " appears, the SCP generates a "CLEARED" message.

Table 5
Chiller-Level Diagnostic Codes (See Notes 1, 2)

Diagnostic Codes (3)			
UCP695 Display	SCP Display	Description of Diagnostic Condition	System Reset
b A3	DIAG. A3	Evaporator Refrigerant Temperature Range	Manual
b A4	DIAG. A4	Motor Temperature Sensor #1 (4B1R2)	Manual
b A5	DIAG. A5	Maximum Acceleration Time Range	Manual
b A7	DIAG. A7	Motor Temperature Sensor #2 (4B1R3)	Manual
b A8	DIAG. A8	Motor Temperature Sensor #3 (4B1R4)	Manual
b A9	DIAG. A9	Oil Temperature Sensor (4RT7)	Manual
b Ab	DIAG. Ab	Leaving Water Temperature Sensor (4RT1)	Manual
b AC	DIAG. AC	Opt. Condenser Refrig. Pressure Sensor (1R1)	Manual
b Ad	DIAG. Ad	Evaporator Temperature Sensor (4RT5)	Manual
b AE	DIAG. AE	Opt. Ambient Temperature Sensor (4RT6)	Manual
b AF	DIAG. AF	Opt. Bearing Temperature Sensor #1 (4RT8)	Manual
b b0	DIAG. b0	Opt. Bearing Temperature Sensor #2 (4RT9)	Manual
*b d9	DIAG. d9	Extended Power Loss	Automatic
b dA	DIAG. dA	Surge	Manual
b dC	DIAG. dC	Condenser Water Flow Overdue	Manual
*b E2	DIAG. E2	Momentary Power Loss	Automatic
b E3	DIAG. E3	Phase Imbalance	Manual
b E4	DIAG. E4	Phase Loss	Manual
b E5	DIAG. E5	Phase Reversal	Manual
b E7	DIAG. E7	High Motor Temperature	Manual
b E8	DIAG. E8	Differential Oil Pressure Switch	Manual
b E9	DIAG. E9	Stop Relay	Manual
b EA	DIAG. EA	High Bearing Temperature (Sensor #1)	Manual
b Eb	DIAG. Eb	High Bearing Temperature (Sensor #2)	Manual
b EC	DIAG. EC	Running Overload	Manual
*b Ed	DIAG. Ed	Chilled Water Flow	Automatic
b EE	DIAG. EE	Exceeded Maximum Acceleration Time	Manual
b F0	DIAG. F0	Transition	Manual
b F1	DIAG. F1	Opt. Running External Interlock	Manual
b F2	DIAG. F2	Low Oil Pressure	Manual
b F4	DIAG. F4	High Oil Temperature	Manual
b F5	DIAG. F5	High Condenser Refrigerant Pressure	Manual
*b F7	DIAG. F7	Condenser Water Flow	Automatic
b F8	DIAG. F8	Improper Unit Identification	Manual
b F9	DIAG. F9	Free-Cooling Valves	Manual
b FA	DIAG. FA	Actuator	Manual
b Fb	DIAG. Fb	Low Evaporator Refrigerant Temperature	Manual
b Fd	DIAG. Fd	Opt. External Interlock	Manual
b FF	DIAG. FF	Unit Control Module	Manual

*The SCP does not record and alarm "nonlatching" (i.e., automatic reset) chiller diagnostic conditions.

Notes:

1. It is not possible to clear "latching" diagnostic condition (i.e., one requiring manual reset) from a higher level device such as an SCP699, Tracer or generic BAS. To manually reset the UCP695 panel–after diagnosing and correcting the problem, toggle the 3-position chiller switch to "Standby/Reset", then back to "Auto/Remote" or "Auto/Local".
2. To determine if manual reset is required, check the "Manual Reset Required" status indicator light on the front of the UCP695 control panel.
3. The "b" prefix on the UCP695 diagnostic codes does not appear on the SCP699 display.

Note: When a system diagnostic condition is detected and recorded, the SCP will not:

a. record a subsequent system error until the "Display System Report/Alarm Reset*" button is pressed; nor

b. alarm a diagnostic condition with the same error code previously recorded.

For instance, if the last diagnostic code recorded in the SCP's memory is "DF" [i.e., communications failure]–and the SCP detects another communications failure, it will not flash the display and energize the alarm relay. However, the original "DF" error code will remain in the system status report either until another, different diagnostic [e.g., "AA", system leaving chilled water temperature sensor] is detected and recorded, or until the SCP's diagnostic register is cleared. (See the first note under Item 4 for diagnostic clearance instructions.)

Schedule Report

To view a report of the present day's operating schedule, press the "Select Report" push button until "SCHEDULE" appears on the alphanumeric display. (Notice that the "Scheduled Control" status indicator light comes on and remains lit throughout this report.) Then, press the "Display Report" key.

The SCP automatically displays the current day of the week, the "occupied" system chilled water setpoint, the "on" and "off" times (i.e., based on the 24-hour clock) for this setpoint, and an alternative "unoccupied" chilled water setpoint (i.e., for setback operation).

These report entries are displayed in the following manner:

MON. (TUE. thru SUN.; default is MON.)
SET = (OFF, or 1 to 99 F; default is OFF)
BGN = (00.00 to 23.45; default is 00.00)
END = (00.00 to 23.45; default is 00.00)
ELSE = (OFF, or 1 to 99 F; default is OFF)

After the "ELSE = " entry appears, "SCHEDULE" returns to the display.

Note: If no additional push buttons are pressed within 2 minutes, the present system operating status (e.g., "READY", "COOLING", etc.) reappears on the alphanumeric display.

Day/Time Report

By pressing first the "Select Report" key until "DAY/TIME" appears–then the "Display Report" key–the operator can check the status of the SCP's system clock. The current day of the week, along with the present time of day, appear in a 1-line report entry that follows this format:

THU. 13.56
(MON thru SUN; 00.00 to 23.59; default is MON. 00.00)

The "DAY/TIME" report title then reappears on the display and remains there until either: (a) another SCP key is pressed, or (b) 2 minutes elapses. At the end of the 2-minute interval, the present system operating status recurs on the display.

System Report

Note: This report displays system control parameters, and is not the same as the "System (Status) Report" that is issued when the "Display System Report/ Alarm Reset*" button is pressed.

For a rundown of each of the operating parameters associated with the SCP's various control functions, press the "Select Report" key until "SYSTEM" appears on the alphanumeric display. Next, press the "Display Report" push button.

The SCP automatically advances from one system control parameter to the next; as each report entry is displayed, a status indicator light also illuminates. This allows the operator to determine what control function (or mode) was used to establish that particular operating parameter (e.g., manual control, chilled water reset, building automation system, etc.).

Following is a sequential listing of the standard (5) and optional (2) control function entries included in the system report:

1. System Chilled Water Setpoint. Remember to check the status indicator lights during this 2-line report entry to review where this setpoint was established:

CHLD. WTR.
SET = (OFF, or 1 to 99 F; default is OFF)

2. System Current Limit Setpoint. The value in this 2-line entry is expressed as a percentage of the total chiller RLA; check the status indicator lights to determine where this limit was set:

CURRENT
LIM = (0 to 100%; default is 0%)

3. System Free Cooling Setpoint and Temperature (Optional). If any of the units connected to the SCP is equipped with the free cooling option, the SCP displays a 3-line report entry that indicates:

a. the operator-set, entering-condenser (outdoor) sensor temperature limit for automatic free cooling; and,

b. the temperature registered by the optional SCP sensor field-installed either in the common, system entering-condenser water line, or in the outdoor ambient.

FREECOOL
SET = (OFF, or 1 to 140 F; default is OFF)
TEMP = (0 to 140 F; default is 0 F)

4. Electrical Demand Load and Limit. This 3-line report entry indicates:

a. the actual percentage of metered electrical demand at which the system is currently operating; and,

b. the operator-set electrical demand limit point. (The SCP initiates the electrical demand limit mode if the actual percentage of metered electrical demand exceeds this limit point.)

Notice that the "Electrical Demand Limiting" status indicator light is lit while this report entry is displayed.

Below is a typical electrical demand limit entry for the system report:

EL. DEMAND
LOAD = (0 to 100%; default is 0%)
LIM. = (0 to 100%; default is 0%)

Note: This control function is disabled if the electrical demand limit is set at 0% (zero).

5. Chilled Water Reset Temperature. A 2-line system report entry indicates the actual temperature registered at an SCP sensor field-installed in the common, system entering-evaporator water line (i.e., or in the outdoor ambient).

RESET
TEMP = (0 to 140 F; default is 0 F)

The "Chilled Water Reset" status indicator light also illuminates while this entry is displayed.

6. Cooldown Control Limit. A 2-line entry reports the operator-set current limit point (i.e., as a percentage of total chiller RLA) that is effective while the system is operating in the cooldown mode.

Note: The SCP compares the cooldown limit point with the system current limit point and uses the lowest value.

COOLDOWN
LIM = (0 to 100%; default is 0%)

Notice that the "Cooldown Control" status indicator light is on while this entry is on the display.

Note: If the cooldown limit point is set at 0%, the cooldown control function is disabled.

7. Condenser System Limit Control Temperature and "Head" (Optional). SCPs equipped with this control option generate a 3-line system report entry that illuminates the "Condenser System Control" status indicator light, and yields the following information:

a. the temperature registered by the optional SCP sensor installed in either the common, system entering-condenser water line, or outdoor ambient; and,

b. the difference between the evaporator and condenser refrigerant temperatures for the chiller with the lowest differential. (The SCP looks only at those units that are presently operating, compares their "head" values, and displays the lowest refrigerant temperature differential.)

COND. SYS.
TEMP = (0 to 140 F; default is 0 F)
HEAD = (0 to 140 F; default is 0 F)

Note: This control function is active whenever any chiller in the system is operating; it is not operative when the system is in the automatic free cooling mode.

Once the last system report entry is displayed, the "SYSTEM" report title reappears and remains on the alphanumeric display until either: (a) another SCP key is pressed, or (b) 2 minutes elapses. (The SCP indicates the present system operating status [e.g., "COOLING", "INHIBIT", etc.] at the end of the 2-minute interval.)

Chiller Report(s)

In addition to the preformatted system (operating status), schedule, day/time and system (control parameters) reports already described, the SCP also enables the operator to review chiller operation on a unit-by-unit basis.

Press the "Select Report" key until "CHILLER" appears on the display; then press the "Display Report" push button. The SCP automatically displays each of the chiller report entries--itemized below--in the sequence shown.

When applicable, a status indicator light also illuminates; this allows the operator to determine what control function is presently governing the operation of that unit.

Note: The chiller report begins with a display of the 3 (or 4) operating status report entries associated with "UNIT 1"; corresponding status reports for "UNIT 2" and "UNIT 3" follow, where applicable. (Remember that unit numbers correspond to the addresses set up with DIP switch block S11 in the chiller control panels; so, actual chiller status reports for a particular system may include only "UNIT 2", or "UNIT 1" and "UNIT 3", etc.)

A "unit sequence" entry is included after the last unit status report for systems with multiple chillers.

Refer to the chiller report entry descriptions that follow.

1. Chiller Operating Mode. A 1- or 2-digit code indicates the unit's present mode of operation; notice that this same code (i.e., along with an "A" prefix) is also displayed on the unit's UCP695 control panel. (See Table 6 for a summary of chiller operating codes.)

Below is a typical, 1-line report entry for the chiller's operating mode:

MODE 74 (see Table 6)

2. Unit Chilled Water Temperature and Setpoint. This 3-line chiller report entry provides:

a. the temperature registered by that unit's leaving chilled water temperature sensor (4RT1); and,

b. the "active" unit chilled water temperature setpoint. Check the status indicator lights to determine where this setpoint was established (e.g., SCP manual control, SCP scheduled control, building automation system, etc.).

Note: The "FREECOOL" message is displayed in lieu of a setpoint value if the unit is presently operating in the free cooling mode (i.e., operating code "09").

Following is the format used to display the unit's chilled water temperature and setpoint:

CHLD. WTR.
TEMP = (0 to 99 F; default is 0 F)

SET = (AUTO, OFF, or 1 to 99 F; default is AUTO)

or

FREECOOL

3. Chiller Current Load and Limit. A 3-line report entry displays the following data:

a. chiller load (i.e., represented as a percentage of that unit's compressor RLA); and,

b. the "active" unit current limit setpoint. Again, check the status indicator lights to identify the source of this setpoint (e.g., chiller unit control, SCP scheduled control, etc.).

This data appears in the following report entry format:

CURRENT
LOAD = (0 to 100%; default is 0%)
LIM = (0 to 100%; default is 0%)

The SCP then proceeds to the chiller operating status report for "UNIT 2" (if applicable).

In single-chiller system applications, the "CHILLER" report title reappears on the display, and remains there until either: (a) another SCP key is pressed, or (b) 2 minutes elapses. (A status message–representing the system's present operating status–returns to the display once the 2-minute period expires.)

When the SCP is connected to 2 or 3 chillers, chiller report items 1 through 4 are repeated for "UNIT 2" and–if applicable–"UNIT 3".

Note: Chiller status reports are only displayed for units that have communicated with the SCP during the last 2 minutes.

Table 6
Chiller Operating Codes

Operating Codes (1)		
UCP695 Display	SCP Display	Description of Operating Mode
Blank	Blank	Power Off
A 0	MODE 00	Standby/Reset (or chiller off on diagnostic)
A 1	MODE 01	Auto (Local or Remote)
A 9	MODE 09	Free Cooling
A 70	MODE 70	Restart Inhibit
A 71	MODE 71	Establish Condenser Water Flow
A 72	MODE 72	Start
A 74	MODE 74	Run: Normal
A 75	MODE 75	Run: Current Limit (2)
A 76	MODE 76	Run: Condenser Limit (3)
A 77	MODE 77	Run: Evaporator Limit (4)
A 78	MODE 78	Run: Surge Condition (5)
A 79	MODE 79	Post-Lube
A 88	MODE 88	Reset

Notes:
1. The "A" prefix on the UCP695 chiller operating codes does not appear on the SCP699 display.
2. As the current limit setpoint is approached, the UCP695 restricts further opening of the inlet guide vanes.
3. As the condenser limit setpoint is reached, the UCP695 restricts additional compressor loading to avoid shutdown on high condenser pressure (i.e., diagnostic b F5), and initiates a "head relief request" (i.e., optional UCP695 relay package).
4. The UCP695 restricts further opening of the inlet guide vanes to avoid a shutdown on low evaporator refrigerant temperature (i.e., diagnostic b Fb).
5. The UCP695 limits compressor loading and initiates a "head relief request" (i.e., optional relay) when the unit enters a surge condition. An automatic unit shutdown occurs if the unit remains in surge for 15 minutes (i.e., diagnostic b dA).

4. Unit Sequence. Following the last chiller status report item, the SCP generates a 3- or 4-line report entry that identifies which unit (i.e., "UNIT 1", "UNIT 2" or "UNIT 3") is presently the first chiller in the operating sequence, which is second, and--if applicable--which chiller is third in the operating sequence.

Note: The "UNIT SEQ." report entry is not displayed if the SCP is only connected to--or communicating with--1 chiller.

This chiller report entry format indicates the chillers' operating sequence:

UNIT SEQ.
UNIT 2 (1st chiller in operating sequence)
UNIT 3 (2nd chiller in operating sequence)
if applicable,
UNIT 1 (3rd chiller in operating sequence)

After the "UNIT SEQ." report entry is complete (if displayed), the "CHILLER" report title reappears on the display. It remains there either until: (a) another SCP key is pressed, or (b) 2 minutes elapses. (A status message--representing the system's present operating status--returns to the display once the 2-minute period expires.)

"Program" Interface (Figure 8)

Since the SCP's control strategies are an integral part of the panel's software, very little programming is required. The operator simply inputs scheduled setpoints, and enters values for the control parameters associated with the SCP's standard and optional control functions (e.g., electrical demand limiting, chilled water reset, free cooling, condenser system control, unit sequencing, and cooldown control).

See Figure 8. Notice that the 6 push-button keys--along with the display portion of the panel--allow the operator to set up system operation.

Like the report displays described in the previous section, "programmable" SCP entries are grouped into 4 categories or "main menus": "Schedule", "Day/Time", "System", and "Chiller". The control parameters associated with each of these main menus are described in the following paragraphs, and summarized in Figure 9.

For discussions of how the SCP's major control strategies (i.e., electrical demand limiting, chilled water reset, etc.) work, refer to the SCP699 Operation section of this manual.

Note: An "SCP Programming Aid" worksheet is provided at the back of this manual. It summarizes all operator -programmable control entries, and can be used to record the specific values entered for each.

Figure 8
SCP "Program" Interface

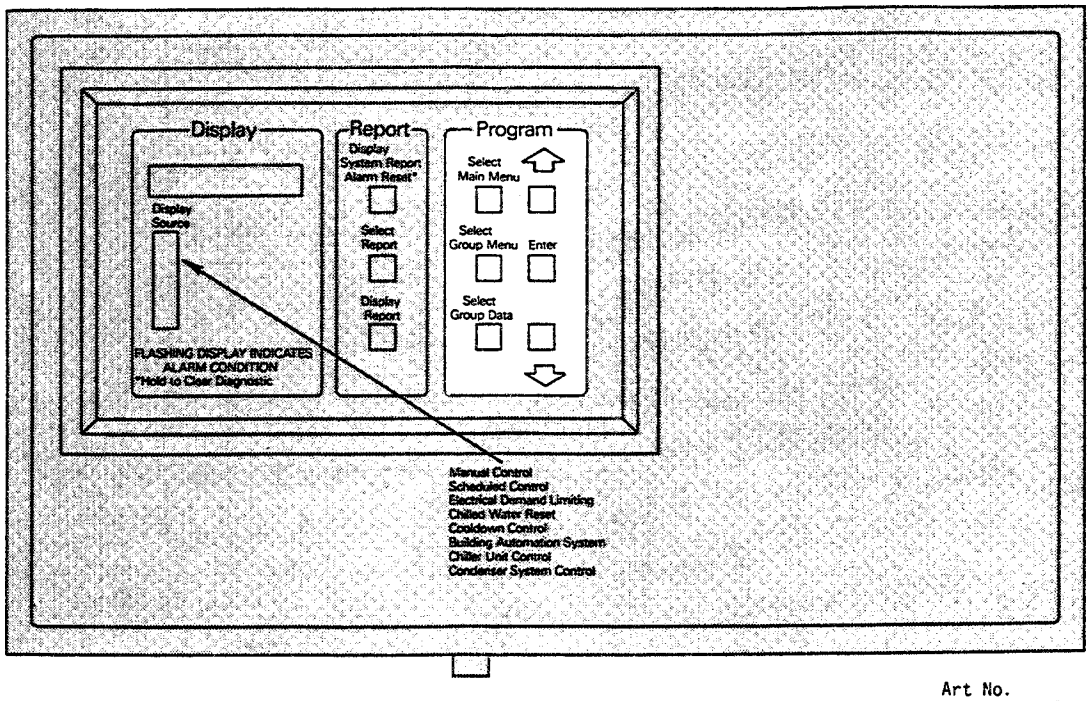

Art No.
RF/CTV-1902B

Figure 9
SCP Program Selection

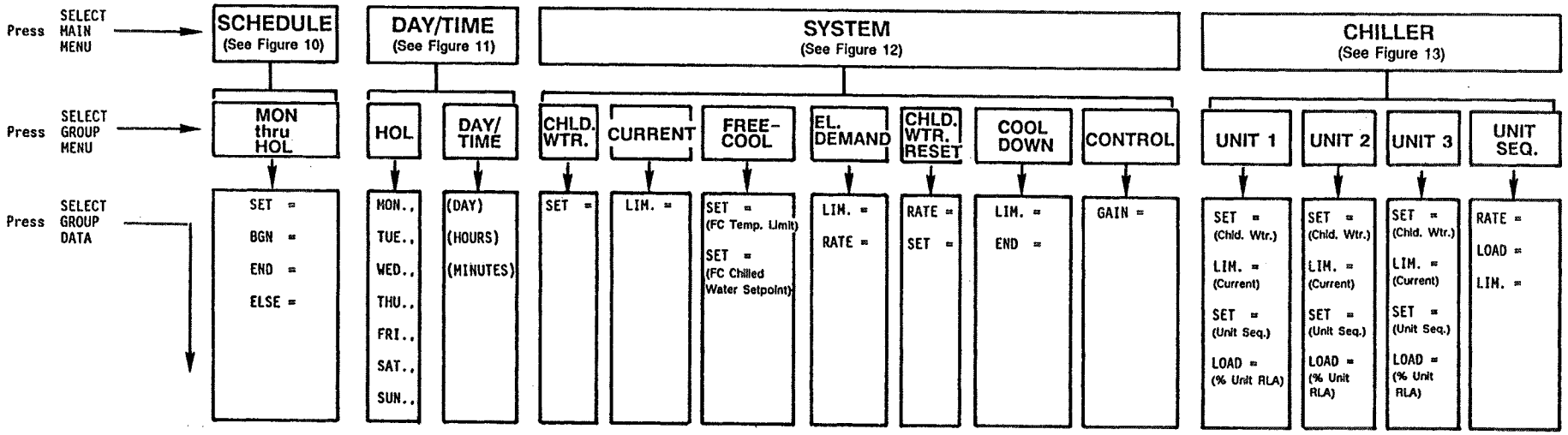

Note: For a more detailed look at each of the 4 main SCP programming menus (i.e., SCHEDULE, DAY/TIME, SYSTEM and CHILLER), see Figures 10 through 13. The schematics in these illustrations include the range of settings for each programmable SCP control setting.

"Schedule" Program

The SCP's schedule control function is comprised of a 7-day operating list of system chilled water setpoints, daily "begin" and "end" times for these setpoints, and alternative chilled water setpoints for "setback" (i.e., unoccupied or "after-hours") operation.

Notice that 4 distinct types of system schedules are possible; the operator can:

1. schedule the system off all day, with none of the pumps running;

2. schedule the system on all day, with a single system (i.e., common leaving-chiller) chilled water setpoint;

3. schedule the system on for part of the day with one chilled water setpoint, and off for the remainder of the day; and,

4. schedule the system on for part of the day with one chilled water setpoint, and use an alternative setpoint for the remainder of the day.

Once established, the 7-day, Monday-through-Sunday system operating scheme is repeated each week until the schedule is manually changed by the operator, or until the SCP encounters a "holiday" schedule.

Note: In addition to the entries for Monday through Sunday, the "schedule" menu day list includes a "holiday" entry that allows the operator to set up a unique, 24-hour system schedule. When any (or all!) of the weekdays--including Saturday and Sunday--are designated as "holidays" under the Day/Time menu, the temporary, 24-hour holiday schedule is executed. (See "'Day/Time' Program" for a further explanation of holiday programming.)

Schedule Setup

Follow the step-by-step instructions outlined below to set up a system operating plan using the SCP's schedule function. (Refer to Figure 10 for a flow chart that summarizes these steps.)

1. Access the SCP's "Schedule" menu.

Press the "Select Main Menu" key (i.e., located in the SCP's "Program" block; Figure 8) until "SCHEDULE" appears on the alphanumeric display.

Notice that the "Scheduled Control" status indicator light illuminates at this time; it will remain on as long as the operator continues to review entries within the "schedule" menu.

2. Specify the day (i.e., Monday through Sunday, or Hoilday) you wish to schedule.

To establish a day-to-day system operating schedule, press the "Select Group Menu" key; "MON." will appear on the display.

Note: Monday is always the first group heading within the "schedule" menu, followed by Tuesday, Wednesday, and so on. To advance from one day of the week to the next, press the "Select Group Menu" key until the desired day is displayed. (The last "schedule" group heading--following Sunday--is Holiday. If "Select Group Menu" is pressed while "HOL." is displayed, "SCHEDULE" reappears on the display.)

3. Enter the desired system leaving chilled water setpoint for that day's scheduled operation.

With the desired day displayed, press the "Select Group Data" key; "SET = " should now appear on the display. This program entry represents the control setpoint for system leaving chilled water temperature; the SCP regulates system operation as necessary --during scheduled hours--to maintain this setpoint.

Figure 10
"Schedule" Setup

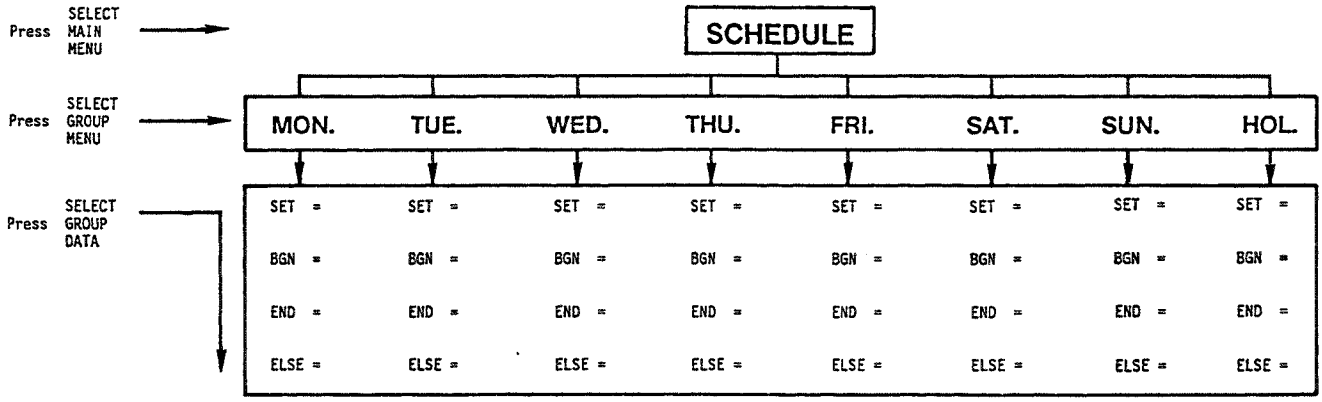

Notes:
1. The "Scheduled Control" status indicator light illuminates when "SCHEDULE" appears on the alphanumeric display, and remains lit while the operator completes the schedule program entries.
2. Possible entries for "SET = " are: OFF (i.e., default setting), MON. thru HOL., and 1 F thru 99 F in increments of 1 F.
3. Possible entries for "BGN = " and "END = " are 00.00 (i.e., default setting) thru 23.45 in 15-minute increments.
4. Possible entries for "ELSE = " are OFF (i.e., default setting), or 1 F thru 99 F in increments of 1 F.

Possible values for this control setting include OFF (i.e., SCP's default value), and 1 F through 99 F, along with MON. through SUN. and HOL. To change the "SET = " value displayed, simply press the " ↑ " (increase) or " ↓ " (decrease) keys until the desired setpoint is obtained; then press "Enter" to store this value in the SCP's memory.

Note: To duplicate the operating schedule of a prior day already programmed, enter the abbreviation of the day to be duplicated for the "SET = " parameter. For instance, if you want Monday's operating schedule (i.e., chilled water setpoint, "begin" and "end" times, and "else" setpoint) to be repeated on Wednesday:

a. Use the "Select Group Menu" key to scroll through the "schedule" menu.

b. When "WED." is displayed, press the "Select Group Data" key; "SET = " should now appear on the display.

c. Press the " ↑ " (increase) and " ↓ " (decrease) keys as needed until "SET = MON." is displayed; then press "Enter". (Notice that the SCP displays the numeric value for Monday's system chilled water setpoint after "Enter" is pressed.)

Important! Although Wednesday's schedule was originally established by entering "SET = MON." (Steps "a" thru "c", above), the SCP will not automatically revise Wednesday's operating schedule if any of Monday's "Schedule" entries are changed!

Note: Entering "SET = HOL." for a given day establishes a permanent holiday! (For example, if "HOL." is entered for Wednesday's "SET = " schedule, the SCP will execute the holiday schedule every Wednesday.) To designate a temporary, one-time-only holiday, be sure to use the "Day/Time" programming menu.

4. Enter the time of day scheduled operation is to begin.

After entering a value for the system leaving chilled water setpoint (Step 3), press the "Select Group Data" key to display "BGN = __.__". This control parameter "tells" the SCP what time of day the scheduled setpoint goes into effect, and is based on the 24-hour clock.

Values ranging from 00.00 (i.e., default setting) to 23.45–in 15-minute increments–are possible. Use the " ↑ " (increase) and " ↓ " (decrease) keys to obtain the desired "begin" time; then press "Enter" to store this value in the SCP's memory.

5. Enter the time of day that scheduled operation should cease.

Once the "begin" time entry is complete (Step 4), press the "Select Group Data" key to display "END = __.__". This parameter "tells" the SCP when to stop maintaining the scheduled system chilled water setpoint established in Step 3.

Again, possible "end" time values are based on the 24-hour clock, and range from 00.00 (i.e., default setting) to 23.45 in increments of 15 minutes. To obtain the desired "end" time, press the " ↑ " and " ↓ " keys until the proper time is displayed; then press "Enter".

Note: If the "begin" and "end" times are identical, the SCP will attempt to maintain the scheduled system leaving chilled water setpoint (i.e., set in Step 3) for 24 continuous hours.

It is possible to enter an "end" time that is earlier than the corresponding "begin" time. For example, if the begin time is 22.15 and the end time is 07.30, the SCP will: begin enforcing the "SET = " value at midnight; stop at 7:30 a.m.; resume enforcement of "SET = " at 10:15 p.m.; and, stop at midnight.

6. Enter the desired alternative ("else") system leaving chilled water setpoint to be used during the remainder of the day (i.e., outside the scheduled "begin" and "end" times).

After completing the "end" time entry (Step 5), press the "Select Group Data" key to display "ELSE = ". This value tells the SCP what system leaving chilled water temperature to maintain during the unscheduled portion of the day (i.e., after the day's scheduled "end" time). Generally, an alternative chilled water setpoint is established for nighttime and weekend (or holiday) operation.

The "ELSE = " control point can be set either at OFF (i.e., default setting), or at any temperature value ranging from 1 F through 99 F in increments of 1 F. Use the " ↑ " and " ↓ " keys to obtain the desired alternative chilled water temperature; then press "Enter" to store this value in the SCP's memory.

Note: If "OFF" is entered for the "ELSE = " chilled water setpoint, the SCP will shut down system operation once the scheduled "end" time is reached.

7. Press the "Select Group Menu" key to advance to the next day to be scheduled.

Note: To schedule a system shutdown through the weekend–or during a holiday–enter "OFF" for Saturday's (or Holiday's) "SET = " program entry. Be sure that the BGN and END times are the same, too. Then enter either "SET = OFF" or "SET = SAT." for Sunday's scheduled system chilled water setpoint.

Repeat the programming procedure described in Steps 3 through 7 until all of the programmable "schedule" menu control settings (i.e., indicated in Figure 10) are complete.

"Day/Time" Program

The SCP's day/time function consists of a 24-hour, 7-day clock/calendar that distinguishes one day of the week from the next (i.e., Monday through Sunday), with each day beginning at 00.00 and ending at 23.59.

See Figure 11. Notice that the "day/time" program menu enables the operator to specify a maximum of 7 days as holidays, and that each holiday can be assigned up to 6 days in advance.

When the operator specifies a particular day of the week as a holiday (e.g., Friday)–and the present day and time match this designated day (e.g., FRI 00.00)–the SCP executes the temporary schedule. At the beginning of the next calendar day (e.g., Saturday), at 00.00, the previous day's holiday "tag" is erased from the SCP's memory. The next time that day occurs (e.g., Friday), its normal operating schedule is used.

Figure 11
"Day/Time" Setup

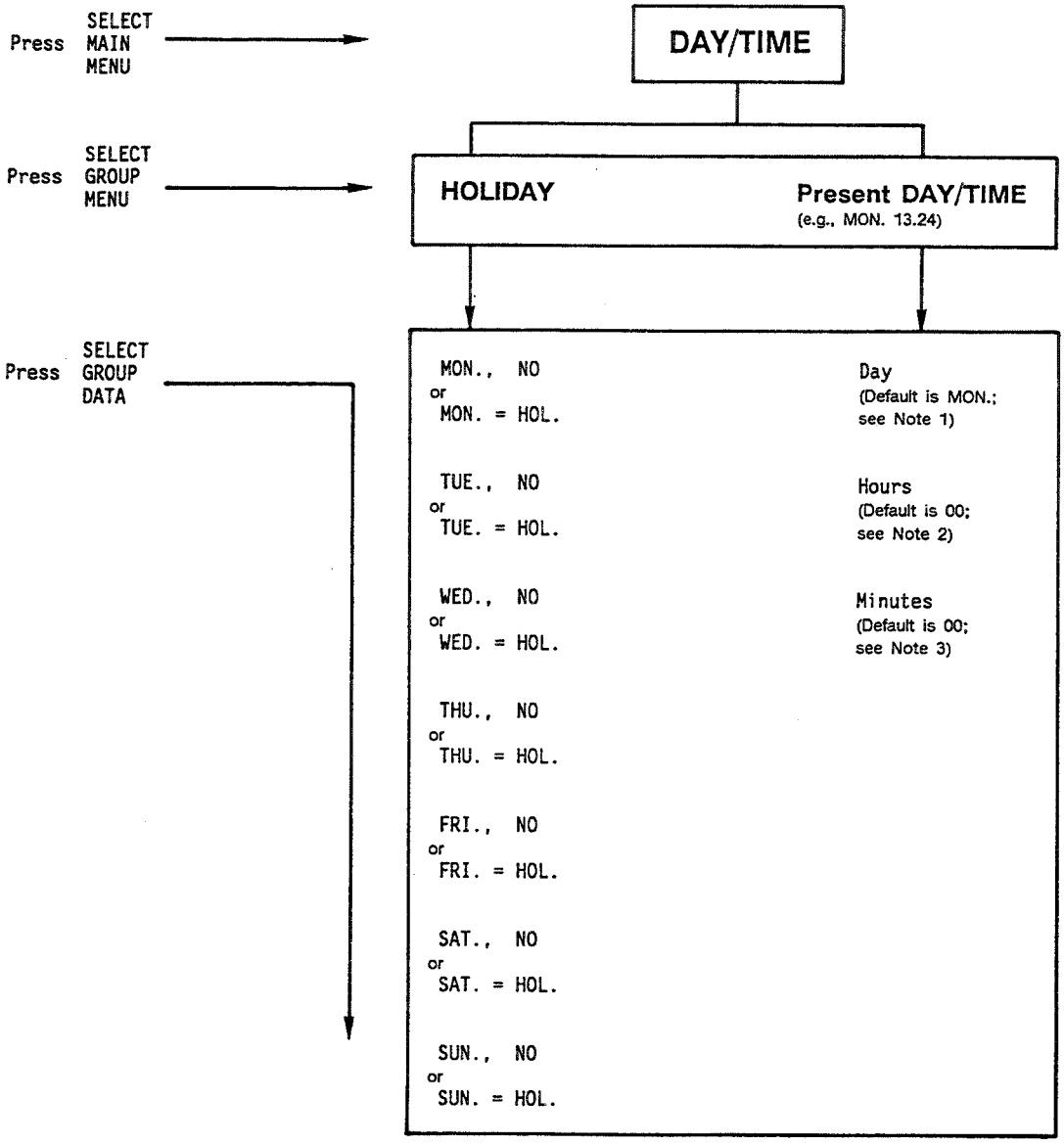

Notes:

1. Use this entry to establish the present day of the week (i.e., MON., TUE., WED., THU., FRI., SAT. or SUN.).

2. This entry allows the operator to set the SCP's "clock" with the present hour of the day in terms of the 24-hour clock (i.e., 00 thru 23). For example, if it is presently 2:00 p.m., set the "hours" at "14".

3. Use this entry to "tell" the SCP how many minutes past the hour it is (i.e., 00 thru 59).

Day/Time Setup

Follow the instructions outlined below to set up the SCP's clock/calendar.

1. Access the SCP's "Day/Time" menu.

Press the SCP's "Select Main Menu" key until "DAY/TIME" appears on the alphanumeric display.

2. Identify which days of the present 7-day cycle are to be "holidays".

To designate upcoming holidays (i.e., no more than 6 days in advance):

a. Press "Select Group Menu" until "HOLIDAY" appears on the display.

b. Press "Select Group Data"; "MON., NO" (i.e., SCP's default setting) or "MON. = HOL." will appear on the display.

To identify Monday as a holiday, press the " ↑ " or " ↓ " keys until "MON. = HOL." is displayed; then press "Enter".

If Monday is not a holiday, use the " ↑ " and " ↓ " keys to obtain the "MON., NO" display; then press "Enter".

c. Advance to the next day of the week by pressing the "Select Group Data" key. Check the entry displayed to verify that the day is properly tagged as a holiday or non-holiday. Use the " ↑ " and " ↓ " keys as described in Step 2b to change the designation, if necessary.

d. Repeat Steps 2b and 2c for each holiday list entry (i.e., through "SUN"; see Figure 11).

Note: Remember that the holiday designation is temporary; a day tagged as a holiday one week will return to its normal system operating schedule the following week (i.e., unless the SCP is programmed otherwise).

3. Enter the present day and time into the SCP's memory.

a. Press the "Select Group Menu" key until "real time"–according to the SCP's internal clock/calendar–is displayed. (The clock/calendar default setting is "MON. 00.00".)

b. Press "Select Group Data" to display only the day portion of the day/time message. Use the " ↑ " and " ↓ " keys to display the current day of the week; then press "Enter".

c. Once the present day of the week is established, press the "Select Group Data" key again; this time, only the hours portion of the real time entry is displayed. Press the " ↑ " and " ↓ " keys, as appropriate, until the present hour of the day is obtained; then press "Enter".

Note: Remember that the SCP's clock function is based on military time (i.e., 24-hour clock). So, if it is presently 2:00 p.m., change the hours display to read "14".

d. To change the minutes portion of the "real time" display, press "Select Group Data" so that only the minutes portion of the entry is displayed. Then, press the " ↑ " and " ↓ " keys, as required, until the display reflects the actual number of minutes past the hour. Depress "Enter" to store this value in the SCP's memory.

Note: Changing the time of day registered by the SCP's clock/calendar does not reset the SCP's internal seconds counter.

If you wish to doublecheck the status of the SCP's internal clock/calendar, press the "Select Group Menu" key until the present day and time are displayed.

"System" Program

Use of the SCP's system programming menu enables the operator to govern system operation by setting up certain "manual" control setpoints.

Following are the system-level operating parameters that can be regulated by operator-entered "manual" control setpoints:

[ ] leaving chilled water temperature;
[ ] current limit;
[ ] free cooling "enable" and chilled water temperature;
[ ] electrical demand limit and rate settings;
[ ] chilled water reset rate and setpoint; and,
[ ] cooldown limit and duration.

SCP responsiveness to cooling requirement changes can also be regulated via the "system" programming menu.

For an illustration of "system" menu organization, see Figure 12; a summary of control settings for each operating parameter is also included there.

System Setup: Chilled Water

To establish the setpoint for system leaving chilled water temperature:

1. Press the "Select Main Menu" push button until "SYSTEM" is displayed.

2. Depress the "Select Group Menu" key once; "CHLD. WTR." should now appear on the alphanumeric display. (Notice that the "Manual Control" status indicator light also illuminates at this time; it will remain on as long as the chilled water setpoint entry is displayed.)

3. With "CHLD. WTR." displayed, push the "Select Group Data" key; "SET = " (or "AUTO") should now appear. This program entry represents the control setpoint for system leaving chilled water temperature; the SCP will regulate system operation as necessary to maintain this setpoint.

Possible values for the system chilled water control setting include AUTO (i.e., default setting), OFF, and 1 F through 99 F in 1-degree increments.

To alter the displayed "SET = " value, press the " ↑ " and " ↓ " keys as necessary until the desired setting appears on the display. Press "Enter" to store this value in the SCP's memory.

Note: When deciding what value to enter for the system chilled water "SET = " control setting, remember that:

a. The SCP will shut down system operation if "SET = OFF" is entered for the system chilled water setpoint.

b. If a numeric value is entered here (e.g., "SET = 40"), the SCP will attempt to maintain that leaving chilled water temperature (e.g., 40 F). Any alternative chilled water setpoint values–determined at the BAS, SCP schedule, or optional chilled water reset control levels–are ignored!

c. Selecting AUTO for the "SET = " value tells the SCP to look elsewhere (e.g., BAS, SCP schedule, optional chilled water reset, etc.) for the effective system leaving chilled water setpoint.

Figure 12
"System" Setup

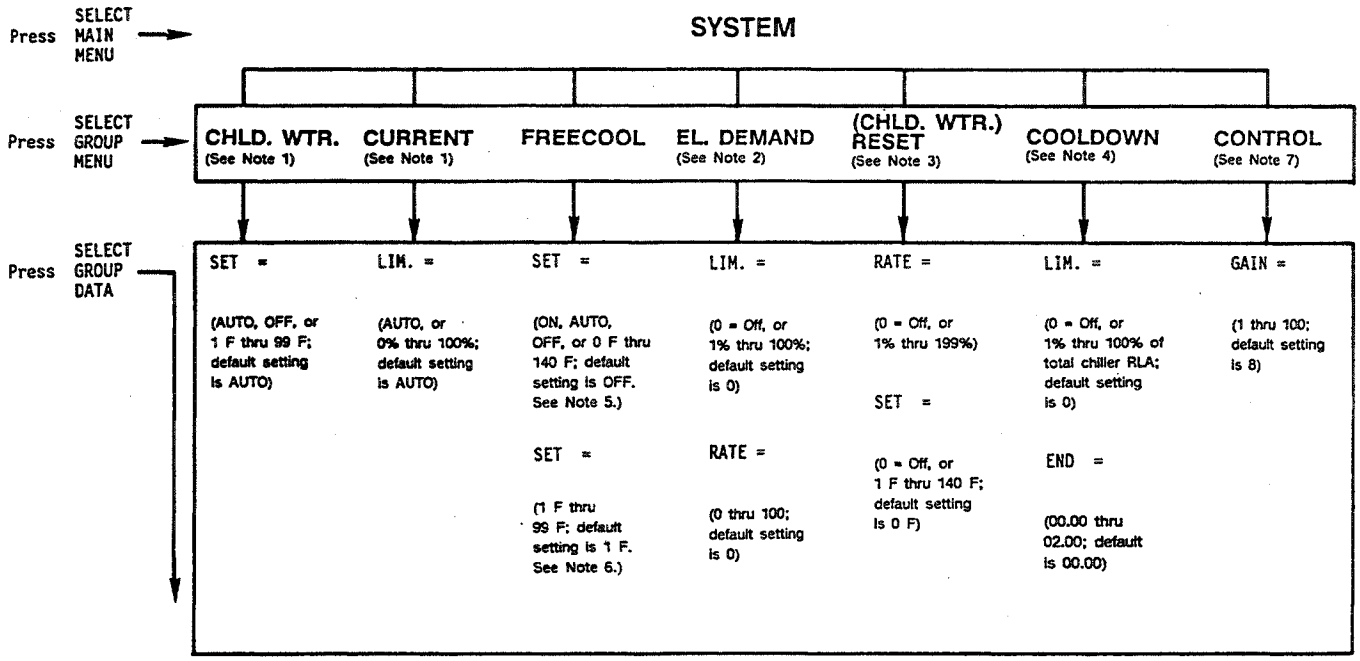

Notes:

1. Manual system leaving chilled water and current limit setpoints; "Manual Control" status indicator light is illuminated while these program entries are displayed.
2. Electrical demand limit value entered for "LIM. = " is compared with the actual system demand to determine whether chillers should be unloaded; "RATE = " is an SCP program constant used to translate meter pulse input data into a desired peak kw percentage (i.e., computed and entered once). "Electrical Demand Limiting" status indicator light is illuminated while these program entries are displayed.
3. "RATE = " value is multiplied by the CWR temperature differential to calculate the amount of setpoint reset; "SET = " values ≤ 25 indicate load-based CWR, while ambient-based CWR is used for values > 25. "Chilled Water Reset" status indicator light remains lit while the CWR program entries are displayed.
4. Effective current limit setpoint during SCP operation in the cooldown mode; "END = " value determines length of cooldown period (i.e., in increments of 15 minutes), as well as minimum duration for thermostatically-controlled free cooling. "Cooldown Control" status indicator light is on while these entries are displayed.
5. Manual sensor setpoint temperature used to determine system free cooling status.
6. Chilled water setpoint used when the SCP is operating in the thermostatically-controlled free cooling mode. (Also, see Note 4.)
7. "GAIN = " value governs the SCP's responsiveness to changes in cooling requirements; the lower the control gain setting, the slower the response time.

System Setup: Current

Note: If you haven't already accessed the "system" programming menu, press "Select Main Menu" until "SYSTEM" appears on the display. Then follow the instructions outlined below.

To set up a manual system current limit setpoint:

1. Press the "Select Group Menu" key until "CURRENT" appears on the display. (Notice that the "Manual Control" status indicator light illuminates at this time; it will remain on as long as the current limit entry is displayed.)

2. Depress the "Select Group Data" key; "LIM. = " (or "AUTO") is now displayed. This entry allows the operator to enter a current limit setpoint for the system as a percentage of total chiller RLA. (If this value is exceeded, the SCP will begin to unload the chillers until the electrical demand is reduced sufficiently.)

Possible values for the system current limit setpoint are AUTO (i.e., default setting), and 0% through 100% of total chiller RLA in increments of 1%.

3. To alter the displayed "LIM. = " value, press the " ↓ " and " ↑ " keys as necessary until the desired setting appears on the display. Press "Enter" to store this value in the SCP's memory.

Note: When selecting a control setting for the system current limit setpoint, remember that:

a. A numeric value (i.e., from 0 through 100) entered for "LIM. = " becomes the effective system current limit setpoint. Any alternative value–either the SCP's default setting, or a BAS-generated current limit setpoint–is ignored!

b. Entering "AUTO" for the "LIM. = " value tells the SCP to look elsewhere for the effective system current limit setpoint. (Other sources for this setpoint include the BAS, SCP default setting, cooldown control, or electrical demand limit control.)

System Setup: Freecool

Note: If you haven't already accessed the "system" programming menu, press "Select Main Menu" until "SYSTEM" appears on the display. Then follow the instructions outlined below.

To set up the thermostatically-controlled, system automatic free cooling option:

1. Press the "Select Group Menu" key until "FREECOOL" appears on the display.

2. Now, push the "Select Group Data" key to display the free cool system setpoint; "SET = " (or "AUTO") should now appear. The SCP uses this particular program entry to control the operating status of the automatic free cooling option. (For an explanation of the various free cooling control strategies, refer to "Automatic Free Cooling" in the Operation section of this manual.)

3. To alter the displayed "SET = " value, press the " ↓ " and " ↑ " keys as necessary until the desired setting appears on the display.

Possible values for the free cool system setpoint include ON, AUTO, OFF (i.e., default setting), and 0 F through 140 F in 1-degree increments.

Note: When deciding what control setting to enter for the free cooling (FC) system setpoint, remember that:

a. The SCP will disable system-level free cooling operation if "SET = OFF" is entered for the FC system setpoint.

b. Entering "SET = ON" tells the SCP to operate all chillers equipped with the free cooling option in the free cooling mode. Free cooling operation will continue until the FC system setpoint is changed to a numeric value, AUTO or OFF.

c. When the FC system setpoint is AUTO, the SCP looks elsewhere (e.g., BAS) for the effective control setting or "enabling" contact closure(s).

d. Thermostatically-controlled, system -level free cooling is available when a numeric value is entered for the "SET = " FC system setpoint. (See note in Step 6.)

4. Press "Enter" to store the selected free cool system setpoint value in the SCP's memory.

5. Display the system free cool (FC) chilled water setpoint by pressing the "Select Group Data" push button; again, a "SET = " message appears on the display. The value shown there represents the system leaving chilled water setpoint used by the SCP when it is operating in the thermostatically-controlled free cooling mode.

6. Use the " ↓ " and " ↑ " keys to change the displayed FC chilled water setpoint until the desired setting is obtained; then press "Enter". Setpoint values range from 1 F through 99 F (i.e., in 1-degree increments); the SCP default value for the FC chilled water setpoint is 1.

Note: The SCP allows the system to remain in the free cooling mode as long as the system leaving chilled water temperature is less than or equal to the FC chilled water setpoint. When this value is exceeded, the SCP returns the system to the powered cooling mode. Once the thermostatically-controlled FC mode is initiated, however, the system will operate in that mode–regardless of chilled water temperature–for a minimum of either 15 minutes or the duration of the cooldown period, whichever is greater.

System Setup: Electrical Demand Limit

Note: If you haven't already accessed the "system" programming menu, press "Select Main Menu" until "SYSTEM" appears on the display. Then follow the instructions outlined below.

To set up the SCP's electrical demand limit control function:

1. Press the "Select Group Menu" key until "EL. DEMAND" appears on the display.

Notice that the "Electrical Demand Limiting" status indicator light illuminates; it will remain on as long as electrical demand limit program entries are displayed.

2. Depress the "Select Group Data" push button once to display the electrical demand limit setting (i.e., "LIM. = "). The SCP compares the value shown here against actual system electrical demand to determine whether or not chiller unloading is required.

3. To alter the displayed "LIM. = " setting, use the " ↓ " and " ↑ " keys to obtain the desired limit value; then press "Enter" to store this control setting in the SCP's memory.

Possible electrical demand limit settings range from 1% through 100% (i.e., in 1% increments) of total system demand; a default setting of 0% disables the electrical demand limit option.

4. Press "Select Group Data" to display the control setting for the electrical demand meter rate (i.e., "RATE = "). The value entered here is a program constant used to translate meter pulse input data into a percent of electrical load; it is calculated and programmed into the SCP's memory only once. (See "Electrical Demand Limit Option" in the SCP699 Operation section of this manual.)

5. Use the " ↓ " and " ↓ " keys to obtain the desired meter rate setting; meter rate values range from 0 through 100 (i.e., in increments of 1).

Press the "Enter" key when the designated rate setting is displayed.

Note: Remember that the electrical demand limit function is inoperative unless "AUTO" is entered for the system current limit.

System Setup: Chilled Water Reset

Note: If you haven't already accessed the "system" programming menu, press "Select Main Menu" until "SYSTEM" appears on the display. Then follow the instructions outlined below.

To set up the SCP's chilled water reset (CWR) control function:

1. Press the "Select Group Menu" key until "RESET" appears on the display.

Notice that the "Chilled Water Reset" status indicator light comes on at this time; it will remain lit as long as CWR program entries are displayed.

2. Depress the "Select Group Data" key once; the "RATE = " entry displayed represents the chilled water reset rate. This value is used to calculate the amount of reset (i.e., in degrees F) that will be applied to either a scheduled or BAS-generated system leaving chilled water setpoint. (Refer to "Chilled Water Reset Option" in the SCP699 Operation section of this manual.)

3. Press the " ↓ " and " ↓ " keys, as appropriate, until the desired CWR rate is displayed; control settings range from 1% through 199% in increments of 1%. (The SCP default value for CWR rate is 0, which disables the CWR control function.)

To store this value in the SCP's memory, press "Enter".

4. Display the CWR setpoint temperature (i.e., "SET = ") by pressing the "Select Group Data" key. This program entry tells the SCP when to enable the system CWR control function.

5. To change the "SET = " value from the SCP default setting of 0 (i.e., off), press the " ↓ " and " ↓ " keys, as appropriate, until the desired setpoint is displayed. CWR setpoint values range from 1 F through 140 F in increments of 1 F.

Note: Whenever the CWR setpoint is less than or equal to 25 F, it is defined as the system design delta-T (i.e., differential between system entering and leaving chilled water temperatures). If the "SET = " value is greater than 25 F, the SCP identifies this control setting as an outdoor ambient temperature. Check the position of configuration DIP Switch No. 4 (i.e., see "SCP699 DIP Switch Setup):

a. In the "normal" mode, CWR is enabled whenever the actual outdoor ambient temperature is less than or equal to the CWR "SET = " value.

b. When the outdoor ambient "reverse" mode is selected, CWR is enabled when the outdoor temperature is greater than the CWR "SET = " value.

6. Store the selected CWR setpoint temperature in the SCP's memory by pressing the "Enter" key.

System Setup: Cooldown Control

Note: If you haven't already accessed the "system" programming menu, press the "Select Main Menu" key until "SYSTEM" appears on the display. Then follow the instructions outlined below.

To set up the SCP's cooldown control function:

1. Press the "Select Group Menu" key until "COOLDOWN" appears on the display.

Check the SCP's status indicator lights; notice that the "Cooldown Control" light is on. It will remain lit as long as programming entries associated with the cooldown control function are displayed.

2. Depress the "Select Group Data" key once; "LIM. = " should appear on the display. This program entry gives the SCP the effective system current limit setpoint for cooldown operation.

Note: Remember that the current limit aspect of the cooldown control function is inoperative unless "AUTO" is entered for the system current limit setpoint.

3. Enter the desired cooldown current limit setpoint by pressing the " ↓ " and " ↓ " keys until the proper "LIM. = " value is displayed; then press "Enter".

Values for this setpoint range from 1% through 100% of the total chiller RLA. Entering the SCP default setting--"LIM. = 0"--disables the cooldown control function.

4. Press the "Select Group Data" key to display the cooldown period setting (i.e., "END = "). The value entered here not only determines the length of the cooldown period, but also establishes the minimum "on" time for thermostatically-controlled free cooling.

Control setting values for "END = " range from zero (00.00) through 2 hours (02.00) in 15-minute increments. "END = 00.00" serves as the SCP's default setting. For example, if the "END = " setting is 01.15, the cooldown period will last 75 minutes.

5. Enter the desired value for the cooldown period control setting by pressing the " ↓ " and " ↓ " until the proper "END = " setting is displayed; then press "Enter".

System Setup: Control Gain

Note: If you haven't already accessed the "system" programming menu, press the "Select Main Menu" until "SYSTEM" appears on the display. Then follow the instructions outlined below.

To set up the standard SCP control gain function:

1. Press the "Select Group Menu" key until "CONTROL" appears on the display.

2. Depress the "Select Group Data" key once; "GAIN = " should appear on the display. This program entry directly affects the SCP's responsiveness to changes in cooling requirements; the lower the control gain setting, the longer the SCP's reaction time.

SCP control gain is measured in arbitrary units ranging from 1 through 100, with "GAIN = 8" serving as the default setting.

3. Enter the desired control gain setting. To do this, use the " ↓ " and " ↓ " keys to display the proper "GAIN = " value; then press "Enter".

A control gain setting of "15" is appropriate for most system applications.

Note: Entering an increased gain setting at the SCP will not necessarily yield a faster system response time since the SCP must wait for the units to respond to–and stabilize at–their own individual chilled water setpoints. Instead, the higher "GAIN = " value causes the SCP to more rapidly communicate setpoint changes to the units–but only after:

a. all connected units "tell" the SCP that they are in control (and have been for the last 75 consecutive seconds); and,

b. a discrepancy exists between the actual chilled water temperature and the system chilled water setpoint.

"Chiller" Program

Use of the SCP's chiller programming menu allows the operator to manually establish the following control settings for each chiller in the system:

1. leaving chilled (evaporator) water temperature setpoint;

2. electrical current limit setpoint;

3. order in the chiller start sequence rotation; and,

4. percentage of total chiller capacity.

Values entered for these chiller settings become the effective operating setpoints for the unit designated, provided that the chiller switch (i.e., located on the UCP695 unit control panel) is set at "Auto/Remote".

For an illustration of "chiller" menu organization, see Figure 13. A summary of available control settings for each operating parameter is also included there.

Figure 13
"Chiller" Setup

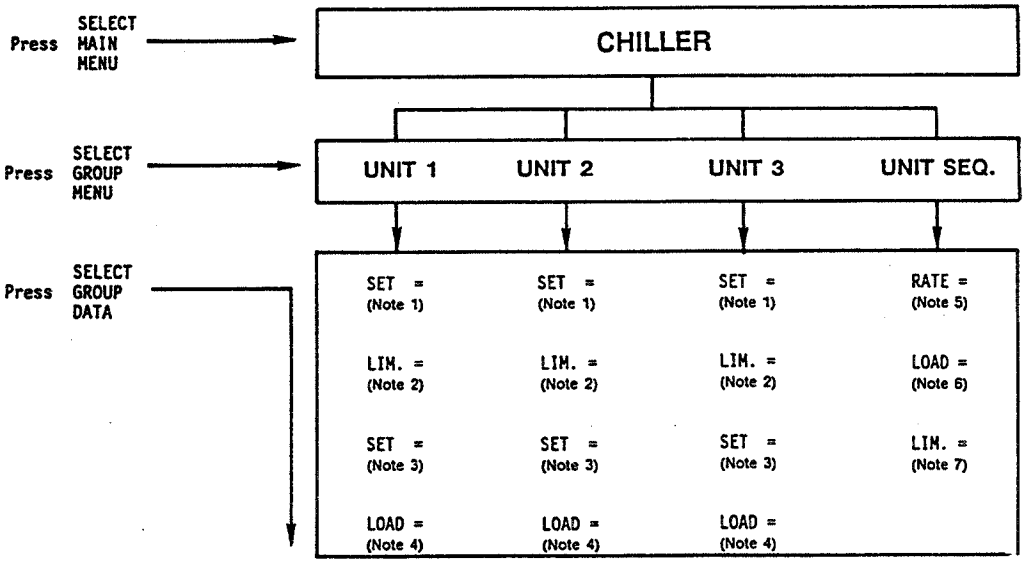

Notes:
1. Leaving chilled water setpoint for that particular unit; possible control settings include: AUTO (i.e., default setting), OFF, and 1 F thru 99 F in increments of 1 F. "Manual Control" status indicator light is on.
2. Current limit setpoint–in terms of % compressor RLA–for that particular unit. Values for this control setting are AUTO (i.e., default setting), and 0% thru 100% of the compressor RLA. "Manual Control" status indicator light is on.
3. The "UNIT SEQ. SET = " entry determines whether this particular chiller is to be started first, second or last. Control settings are 1, 2 or 3; the default setting is 1.
4. Use the "LOAD = " entry to indicate the relative current draw of this particular unit when compared to the total chiller RLA. Possible values for this setting range from 1% (i.e., default) thru 100% of the total chiller RLA. The sum of the "LOAD = " entries for Units 1, 2 and 3 should equal 100%.
5. Rotation period–in days–for the chiller start sequence (i.e., see Note 3). Values ranging from 0 thru 99 may be entered; the default setting is 0 (i.e., no rotation).
6. This program entry tells the SCP when to start an additional chiller. Possible values range from 20% (i.e., default) thru 100% of the compressor RLA; however, the load setting entered must exceed the unit sequence "LIM. = " entry (Note 7) by at least 20.
7. Unit sequence limit setpoint; tells the SCP when to shut down an operating chiller running under SCP control. Possible settings range from 0% (i.e., default) through 80% of the compressor RLA.

Remember this equation when entering setpoints for the unit sequence load and limit:

UNIT SEQ. LOAD > UNIT SEQ. LIMIT + 20

Chiller Setup

Follow the instructions outlined below to set up individual chiller operating setpoints from the SCP:

1. Access the SCP's "Chiller" menu. To do this, press the "Select Main Menu" key until "CHILLER" appears on the alphanumeric display.

2. Select the chiller you wish to set up (i.e., "UNIT 1", "UNIT 2" or "UNIT 3") by pressing the "Select Group Menu" key.

Note: Remember that the unit's identity–or "address"–is assigned at switch block S11 in the UCP695 control panel of each chiller. (See "UCP695 DIP Switch Setup" in the Start-Up section of this manual.)

3. Enter the desired leaving chilled water temperature for that unit.

a. Push the "Select Group Data" key once to display the unit's chilled water setpoint. "SET = " (or "AUTO") should appear, and the "Manual Control" status indicator light will illuminate.

b. Press the " ↓ " and " ↑ " keys until the desired "SET = " value is displayed. Possible entries for this control setting are: AUTO (i.e., default setting), OFF, and 1 F through 99 F in increments of 1 F.

Note: The SCP cannot automatically control unit operation unless AUTO is entered for "SET = " .

c. Press "Enter" to store the selected unit chilled water setpoint in the SCP's memory.

4. Enter the desired unit electrical current limit setpoint.

a. After completing the chilled water setpoint entry (Step 3), press "Select Group Data" once. "LIM. = " (or "AUTO") will appear on the display, and the "Manual Control" status indicator light will come on.

b. Use the " ↓ " and " ↑ " keys to obtain the desired "LIM. = " setpoint. Values for the unit current limit setting include AUTO (i.e., default setting), and 0% through 100% of the compressor RLA.

Note: To enable the SCP's electrical demand limit, cooldown, and unloading-before-a-start control functions, enter "LIM. = AUTO".

c. Press "Enter" when the selected "LIM. = " value is displayed.

5. Determine where you wish to place this unit in the chiller start rotation (i.e., first, second or third).

a. After entering a "LIM. = " value (Step 4), press the "Select Group Data" key once to display the chiller start rotation order (i.e., "UNIT SEQ. SET = ") setting for this unit.

b. Use the " ↓ " and " ↑ " keys to obtain the desired sequence order. Control settings of 1, 2 and 3 tell the SCP whether to start this chiller first, second or last, respectively. (The default setting is "UNIT SEQ. SET = 1".)

Note: The SCP changes this value automatically at the end of each rotation period (i.e., "RATE = ").

c. Press "Enter" when the selected order in the start rotation is displayed.

6. Enter the relative current draw of this unit (i.e., percentage of total chiller current draw for the system).

a. Once the unit sequence setting is entered (Step 5), press "Select Group Data" once; "LOAD = " will appear on the display. (The SCP uses this program entry to calculate system current draw.)

b. Determine the relative current draw of this particular unit when compared to the chiller RLA of the system:

$$\text{LOAD \#1} = \frac{\text{UNIT 1 RLA}}{\text{SYSTEM RLA}},$$

where the "LOAD #x" value is rounded to the nearest integer.

For instance, if a system includes 3 chillers of equal size, the "LOAD = " value for each chiller would be 33, 33 and 34.

Note: The sum of the "LOAD = " settings for all chillers connected to the SCP (i.e., Unit 1, Unit 2 and Unit 3, if applicable) must equal 100%.

c. Press the " ↓ " and " ↑ " keys until the correct numeric value for "LOAD = " is displayed; then press "Enter". (Control settings range from 1% through 100% of total chiller current draw.)

7. Repeat Steps 2 through 6 for each remaining chiller in the system.

Note: When fewer than 3 chillers are connected to the SCP, you may wish to change these control settings for the unused chiller designations (i.e., "UNIT 3", or "UNIT 2" and "UNIT 3"):

a. enter "OFF" for the unit "SET = " chilled water temperature setpoint; and,

b. enter "0" for the unit "LIM. = " electrical current limit setpoint.

8. Access the SCP's chiller start sequence function by pressing the "Select Group Menu" key until "UNIT SEQ." is displayed. (See Figure 13.)

9. Set up the frequency of rotations for the chiller start sequence.

a. Press the "Select Group Data" key once to display the unit sequence rate program entry (i.e., "RATE = "). The range of settings extends from 0 days through 99 days; if "RATE = 0" (i.e., default setting), automatic rotation of the chiller start sequence will not occur.

b. Use the " ↓ " and " ↑ " keys as needed to obtain the desired rotation period.

c. Press "Enter" when the selected "RATE = " value is displayed.

10. Enter a value for the unit sequence load setpoint. This numeric value is a percentage of the compressor RLA for each chiller, and is used to tell the SCP when to start another chiller. (The SCP looks at the "UNIT SEQ. SET = " values [entered in Step 5] to determine which chiller to bring "on-line".)

a. Press the "Select Group Data" key once; "LOAD = " will appear on the display.

b. Use " ↓ " and " ↑ " to obtain the desired control setting; values range from 20% (i.e., default setting) through 100% of the compressor RLA for each chiller.

"LOAD = " values of 90% to 95% are recommended for most system applications.

Note: The load setting entered must exceed the unit sequence "LIM. = " entry (Step 11) by at least 20.

c. Press "Enter" when the selected "LOAD = " value is displayed.

11. Enter the desired setting for the unit sequence limit setpoint. The SCP uses this setpoint to decide when to shut down a chiller operating under its control. (The "UNIT SEQ. RATE = " settings entered in Step 5 also determine the order for shutting down the chillers.)

a. Press the "Select Group Data" key once; "LIM. = " will appear on the display.

b. Use the " ↑ " and " ↓ " keys to obtain the desired control setting; values range from 0% (i.e., default setting) through 80% of the compressor RLA for each chiller.

"LIM. = " values of approximately 55% are recommended for most system applications.

c. Press "Enter" when the selected "LIM. = " value is displayed.

Note: When determining the unit sequence limit setpoint, remember this equation:

UNIT SEQ. LOAD > UNIT SEQ. LIM. + 20.

where:

[ ] the unit sequence load setting corresponds to approximately 90% to 95% of a chiller's capacity (i.e., under normal operation, this value must be exceeded by all operating chillers before an additional chiller is started);

[ ] the unit sequence limit setting represents approximately 40% to 45% of a chiller's cooling capacity (i.e., all operating chillers must be operating below this value before a chiller is shut down); and,

[ ] the units affected are only those with chiller switches positioned at AUTO/REMOTE.

Note: Unit sequence load and limit settings are based on chiller RLA. When selecting appropriate values for these setpoints, it is important to remember that there is not a direct relationship between a chiller's RLA and its relative cooling capacity.

* * * * *

For your convenience, an "SCP Operator Reference Guide"--summarizing the SCP's report and programming menus--is provided at the back of this manual.

SCP Setup Recommendations for Typical Systems

Remotely-Controlled SCP

While the SCP controls the operation of connected chiller system equipment, its own operation can–in turn–be governed remotely from a higher-level control device.

There are 3 alternatives for remotely controlling the SCP; the extent or degree of control possible varies with the remote control method selected:

[ ] **Bidirectional Communications Link (BCL).** This method of remote control allows the operator the most flexibility when deciding whether various chiller system control functions are executed by the SCP or a Trane BAS (e.g., Tracer®).

Using the direct serial link established with the BCL, a Tracer can receive all SCP data and control information, as well as communicate all programmable control settings to the SCP.

Notice that chiller and system data can be displayed at either the SCP or the Tracer. Manual overrides for system and individual chiller setpoints are available at the SCP.

[ ] **"Scheduled System Enable/ Disable" Binary Input.** Like a remote "on/off" switch, the SCP's "Scheduled System Enable/Disable" binary input allows a supervisory controller (e.g., time clock or BAS) to turn on the chiller system by closing a set of contacts. Similarly, opening these same contacts will shut down system operation.

To use this method of remote control, the SCP must be: (1) wired to control the chillers and auxiliary equipment; and, (2) programmed to provide either 24-hour, stand-alone operation, 7 days a week, or scheduled system operation.

Again, manual overrides for system and individual chiller setpoints are available at the SCP, but chiller and system data can only be displayed at the SCP.

[ ] **Generic BAS Option.** Once the generic BAS option is installed and enabled, the SCP loses all but two of its system control capabilities (i.e., automatic on/off free cooling and condenser limit control functions are retained). Therefore, the generic BAS must be responsible for controlling the chilled water pumps and chillers–as well as issuing any temperature or current setpoint analog inputs.

Notice, too, that manual overrides available at the SCP are restricted to individual unit setpoints.

Note: When programming the SCP to meet the requirements of your chiller system, be sure to account for the impact of any supervisory controller on SCP operation!

Sample SCP Programs

Following are SCP program examples that correspond to 3 typical types of chiller systems:

1. 2 parallel-piped chillers with a common system chilled water pump;

2. 2 series-piped chillers with a common system chilled water pump; and,

3. 3 parallel-piped chillers in a decoupled system with a chilled water pump for each chiller and a common system pump.

These examples–along with the explanations that accompany them–are intended to help you establish an SCP program that meets the requirements and constraints of your chiller system application.

Example 1
2 Parallel-Piped Chillers

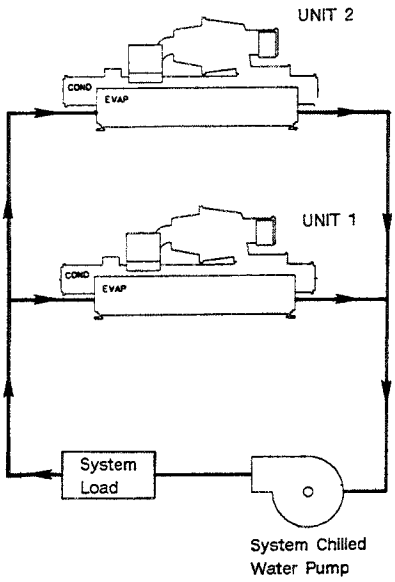

SCP Program Entries

SCHEDULE Menu

	MON.	TUE.	WED.	THU.	FRI.	SAT.	SUN.	HOL.
System Setpoint	45	45	45	45	45	45	OFF	OFF
Begin Time	5.00	5.00	5.00	5.00	5.00	5.00	0.00	0.00
End Time	18.00	18.00	18.00	18.00	18.00	12.00	0.00	0.00
Else	OFF	OFF	OFF	OFF	OFF	OFF	OFF	OFF

DAY/TIME Menu

Holiday (1)	NO	NO	NO	NO	YES	NO	NO
Day/Time	Enter current day of week and time of day (e.g., MON. 7.45)						

SYSTEM Menu

Chilled Water	SET = AUTO	
Current	SET = AUTO	
Freecool	FC SET = 50	FC SCWS = 55 (2)
El. Demand	LIM. = 55	RATE = 34
Reset	RATE = 100	CWR SET = 10 (3)
Cooldown	LIM. = 100	END = 1.00 (2, 4)
Control	GAIN = 15	

CHILLER Menu

	UNIT 1	UNIT 2	UNIT 3
Chilled Water	SET = AUTO	SET = AUTO	SET = OFF (5)
Current Limit	LIM. = AUTO	LIM. = AUTO	LIM. = 0 (6)
Sequence No.	SET = 1	SET = 2	
Load (% Total)	LOAD = 50	LOAD = 50	
Sequence	RATE = 7	LOAD = 90	LIM. = 55

System Characteristics

[ ] Common system chilled water pump.
[ ] SCP controls system operating schedule.
[ ] System design delta-T is 10 F.

UCP695 Chiller Control Panel Settings

[ ] chilled water setpoint = 45
[ ] current limit setpoint = 100
[ ] control gain setpoint = 25
[ ] differential-to-start setpoint = 6 (7)
[ ] condenser limit setpoint = 95
[ ] evaporator refrig. trip setpoint = 30

Notes:

1. Notice that Friday has been assigned a holiday operating schedule. In this example, the chiller system will be turned off all day Friday; the normal system operating schedule will be executed the following Friday.

2. The free cooling parameters set up in this sample program allow the SCP to automatically initiate free cooling operation at system start-up if the temperature (i.e., outdoor ambient) registered by the freecool sensor is less than or equal to 50 F.

Notice that the system will remain in the free cooling mode for a minimum of 1 hour (i.e., cooldown period). If there is sufficient free cooling capacity to maintain a system chilled water temperature of 55 F or less, the SCP will remain in this mode.

3. Notice that the chilled water reset parameters are programmed to maintain a constant return water temperature (i.e., RATE = 100) that is 10 F (i.e., CWR SET = 10) above the scheduled system chilled water setpoint of 45 F.

Maintenance of a constant return water temperature during chilled water reset can be critical in parallel-piped chiller systems where there may be water flow through a nonoperating chiller(s). In this situation, chilled water from an operating chiller mixes with return water through the nonoperating chiller to supply a warmer "mixed" chilled water temperature to the building.

Because its leaving chilled water temperature sensor is registering this "mixed" temperature, the SCP may step the operating chiller's setpoint significantly below the actual system setpoint in order to satisfy the cooling load. Operating the chiller system at a constant return water temperature will prevent this from occurring.

4. Values entered for the SCP's cooldown control settings in this program will ramp the system chilled water setpoint from the start-up water temperature to 45 F over a 1-hour period. Since the cooldown current limit setting is 100, no current limiting will occur during this time.

System free cooling operation may occur during the cooldown period if the outdoor ambient is low enough (i.e., free cool sensor registers a temperature less than or equal to 50 F).

5. To enable SCP control of the unit chilled water setpoints, each setpoint entry in the SCP's CHILLER menu must be AUTO.

6. AUTO must be entered for each of the unit current limit entries in the CHILLER menu to allow the SCP's electrical demand limit function to operate.

These AUTO current limit entries also cause the SCP to unload the running chiller just before the second chiller is brought on-line; this allows the system to establish a load-balance between the chillers.

7. Notice that the differential-to-start setting at each UCP695 chiller control panel is 6. Setting the unit differential-to-start setpoint at a value slightly higher than 1/2 the unit's design delta-T also helps the SCP achieve a load-balance between the chillers.

Example 2
2 Series-Piped Chillers

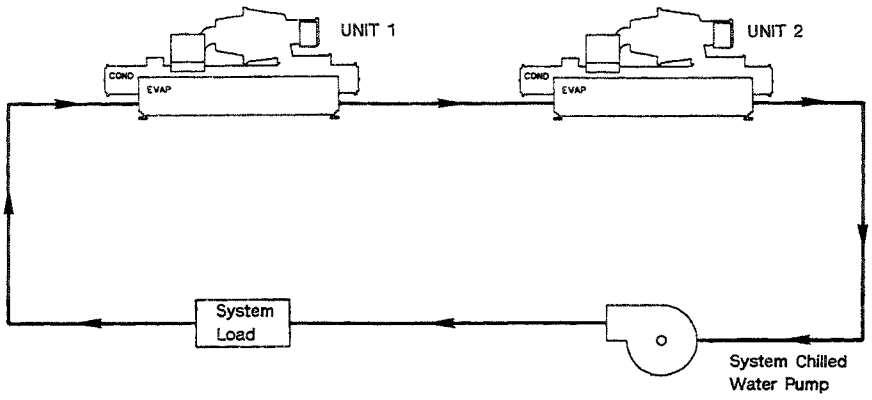

System Characteristics

[ ] Common system chilled water pump.
[ ] SCP is enabled remotely from an external control system.
[ ] Chiller design delta-T is 10 F.
[ ] UNIT 1 is the "upstream" chiller.

UCP695 Chiller Control Panel Settings

[ ] chilled water setpoint = 45
[ ] current limit setpoint = 100
[ ] control gain setpoint = 25
[ ] differential-to-start setpoint = 5 (5)
[ ] condenser limit setpoint = 95
[ ] evaporator refrig. trip setpoint = 30

SCP Program Entries

SCHEDULE Menu (1)

	MON.	TUE.	WED.	THU.	FRI.	SAT.	SUN.	HOL.
System Setpoint	45	45	45	45	45	45	45	45
Begin Time	0.00	0.00	0.00	0.00	0.00	0.00	0.00	0.00
End Time	0.00	0.00	0.00	0.00	0.00	0.00	0.00	0.00
Else	OFF	OFF	OFF	OFF	OFF	OFF	OFF	OFF

DAY/TIME Menu

Holiday (1)	NO	NO	NO	NO	NO	NO	NO

Day/Time: Enter current day of week and time of day (e.g., MON. 7.45)

SYSTEM Menu

Chilled Water	SET = AUTO (2)	
Current	SET = AUTO	
Freecool	FC SET = OFF	FC SCWS = 1
El. Demand	LIM. = 0	RATE = 0
Reset	RATE = 0	CWR SET = 0
Cooldown	LIM. = 0	END = 0.00
Control	GAIN = 15	

CHILLER Menu

	UNIT 1	UNIT 2	UNIT 3
Chilled Water	SET = AUTO	SET = AUTO	SET = OFF
Current Limit	LIM. = 100	LIM. = 100	LIM. = 0 (3)
Sequence No.	SET = 2	SET = 1	(4)
Load (% Total)	LOAD = 50	LOAD = 50	
Sequence	RATE = 0 (4)	LOAD = 90	LIM. = 55

Notes:

1. Notice that the operator entries in the SCP's SCHEDULE menu set up continuous system operation (i.e., 24 hours each day, 7 days a week). Actual chiller system operation is then enabled and disabled by an external contact closure at the SCP's "Scheduled System Enable/ Disable" binary input (i.e., TB3-5 and -6).

2. To "force" the SCP to obtain its system chilled water setpoint from the SCHEDULE menu, AUTO is entered for the chilled water setpoint entry in the SCP's SYSTEM menu.

3. In this program, a value of 100 was entered for the current limit settings in the SCP's CHILLER menu. While this restrains the SCP from unloading the operating chiller when the second unit is started (i.e., as it would if "LIM. = AUTO"), it may also hinder the SCP's ability to load-balance the 2 chillers.

See Note 6 in Example 1.

4. The sequence number assignments in the SCP's CHILLER menu ensure that the downstream chiller–UNIT 2–is always the first chiller to start (i.e., CHILLER Sequence "RATE = 0"). This arrangement minimizes any disturbance of the system leaving chilled water temperature caused by start-up of the upstream chiller (UNIT 1).

If the downstream chiller in this system (UNIT 2) was turned off first, UNIT 1's chilled water setpoint would be rapidly adjusted to bring the system leaving chilled water temperature to setpoint.

5. In series-piped chiller systems, the SCP will attempt to load-balance both chillers as soon as the second chiller is started; load-balancing is accomplished by adjusting each unit's chilled water setpoint.

Notice that increasing or decreasing the differential-to-start setting at the second unit's UCP695 chiller control panel (i.e., UNIT 1 in this example) can influence the load-balance attained by the SCP.

Lowering the value of the upstream unit's differential-to-start setpoint can cause the downstream chiller to initially assume most of the cooling load. However, further increases in system delta-T will be absorbed by the upstream chiller until it reaches its maximum capacity; additional loading of the downstream chiller will not occur until this point is reached.

Example 3
3 Parallel-Piped Chillers (Decoupled System)

SCP Program Entries

SCHEDULE Menu

	MON.	TUE.	WED.	THU.	FRI.	SAT.	SUN.	HOL.
System Setpoint	45	45	45	45	45	45	OFF	OFF
Begin Time	5.00	5.00	5.00	5.00	5.00	5.00	0.00	0.00
End Time	18.00	18.00	18.00	18.00	18.00	12.00	0.00	0.00
Else	OFF	OFF	OFF	OFF	OFF	OFF	OFF	OFF

DAY/TIME Menu

Holiday (1)	NO	NO	NO	NO	NO	NO	NO

Day/Time: Enter current day of week and time of day (e.g., MON. 7.45)

SYSTEM Menu

Chilled Water Current	SET = AUTO		
Freecool	SET = AUTO		
El. Demand	FC SET = OFF	FC SCWS = 1	
Reset	LIM. = 0	RATE = 0	
Cooldown	RATE = 0	CWR SET = 0	
Control	LIM. = 0	END = 0.00	
	GAIN = 15		

CHILLER Menu

	UNIT 1	UNIT 2	UNIT 3
Chilled Water Current Limit	SET = AUTO LIM. = AUTO	SET = AUTO LIM. = AUTO	SET = AUTO LIM. = AUTO
Sequence No.	SET = 1	SET = 1	SET = 1 (1)
Load (% Total)	LOAD = 20	LOAD = 40	LOAD = 40
Sequence	RATE = 0	LOAD = 90	LIM. = 55

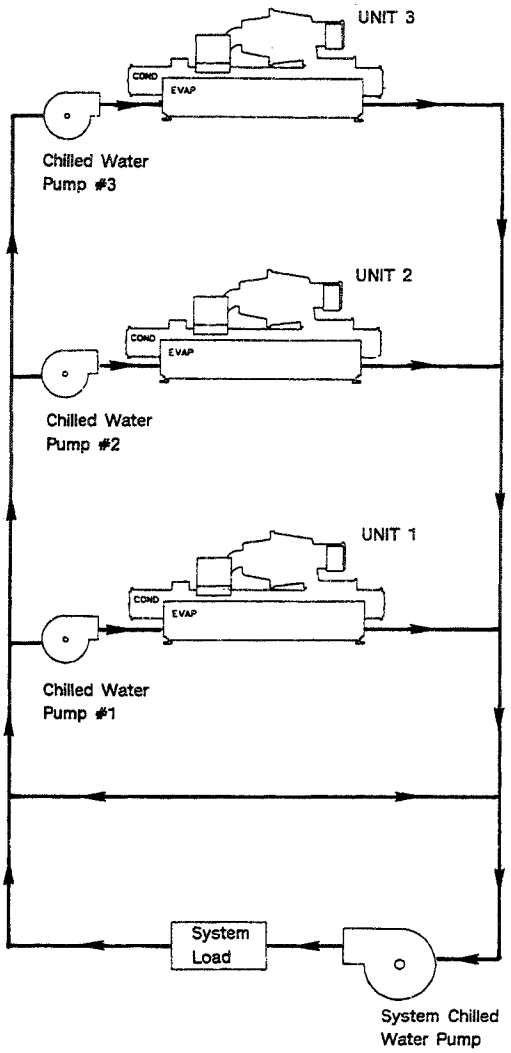

System Characteristics

[ ] Decoupled chiller system.
[ ] Individual chilled water pumps for each chiller, and a common system chilled water pump.

UCP695 Chiller Control Panel Settings

[ ] chilled water setpoint = 45
[ ] current limit setpoint = 100
[ ] control gain setpoint = 10 (2)
[ ] differential-to-start setpoint = 5
[ ] condenser limit setpoint = 95
[ ] evaporator refrig. trip setpoint = 30

Notes:

1. Notice that the chiller sequencing shown in this program example is slightly different than that used in the previous examples.

Since all of the chillers are assigned the same sequence number (i.e., SET = 1), the SCP compares the unit addresses to determine the chiller start order. In this example, UNIT 1 would be started first, followed by UNIT 2 and UNIT 3, respectively.

Notice, too, that when the SCP decides to shut down a chiller, UNIT 1 will be turned off first, followed by UNIT 2 and UNIT 3, respectively. In this example, because the unit sequence numbers are the same–and the smallest unit has the lowest unit address, the smallest chiller is always turned off (and turned on) first. Look at the "Load (% Total)" entries in the SCP's CHILLER menu; the values entered there indicate that UNIT 1 is 1/2 the size of UNIT 2 and UNIT 3.

Since the rotation interval is set at 0 (i.e., "RATE = 0" in the CHILLER menu), the chiller start-up and shutdown orders just described will be maintained permanently.

2. In a decoupled chiller system, leaving (supply) chilled water may flow into the entering (return) water circuit whenever there is an imbalance between the amount of water circulating in the chiller loop and that circulating in the load loop. This can significantly reduce the circulation time of the chiller water loop!

When this type of loop imbalance exists, the unit leaving chilled water temperature sensor (4RT1) of each chiller must respond quickly. To ensure the fastest possible response time:

a. verify that each 4RT1 sensor is inserted properly into its bulbwell, and that enough thermoconductive paste has been used to provide good thermal contact.

b. reduce the control response setting at each UCP695 chiller control panel to approximately 1/2 of the calculated value. (Contact a qualified service technician for assistance.)

The chiller control response setting selected for each unit should be high enough that the unit starts properly and remains on-line when it approaches its setpoint, yet low enough to prevent the system temperature from cycling at low loads.

A unit control response setting of 8 to 12 may be appropriate for a chiller used at the rated water flow, and with a design delta-T of 10 F.

SCP699 Operation

Overview

SCP699 System Control Panels are primarily intended to coordinate operation of connected chiller system equipment (Figure 14) to satisfy and maintain an operator-selected system leaving (supply) chilled water temperature.

To determine–automatically–what system- and chiller-level operating states are needed to meet this cooling requirement, the SCP checks the control settings entered by the system operator, and evaluates:

1. the status of its binary input circuits (i.e., "Scheduled System Enable/Disable" [TB3-5, -6], and "Free Cooling Enable/Disable" [TB3-7, -8]);

2. digital data communicated over its bidirectional communication links (BCLs) with the chillers and Trane BAS, if applicable; and,

3. temperature inputs received from field-installed sensors. The following sensors may be connected to the SCP, depending on system application:

a. system leaving chilled water temperature sensor (i.e., part no. 4533-1710-44B);
b. system entering (return) water temperature sensor (i.e., part no. 4533-1710-44B);
c. free cooling temperature sensor (i.e., part no. 4533-1710-41B);
d. condenser control temperature sensor (i.e., part no. 4533-1710-41C).

Collectively, this information influences the SCP's control status. That is, (1) does a system cooling requirement exist?, and–if so, (2) should free cooling or powered cooling operation be used to satisfy the cooling load?

These major SCP control states (i.e., "off", "cooling" and "free cooling"–along with the system inputs that initiate them–are summarized in Table 7.

Besides providing overall system temperature control, the SCP also includes control functions that enable the operator to dictate the system operating state, limit chiller cooling capacity, and modify the established system chilled water setpoint. These "user-oriented" SCP control functions include scheduling, cooldown, system current and electrical demand limiting, free cooling, and chilled water reset.

Table 7
Major SCP Control States

Manual System CWS (1)	Trane BAS System CWS (2)	Scheduled System CWS (3)	SCP Enable (Binary Input; See Note 4)	SCP Status (5)
Off On	On or Off " "	On or Off " "	Open or Closed " "	Off Cooling
Auto "	Off On	On or Off " "	Open or Closed " "	Off Cooling
Auto "	Auto "	Off On	Open or Closed Closed	Off Cooling
Auto	Auto	On	Open	Off

Notes:
1. Manual system chilled water setpoint is entered with the SCP's "SYSTEM: CHLD. WTR." programming menu; see Figure 9. It is "on" whenever the manual CWS is a valid setpoint and not OFF.
2. Trane BAS system chilled water setpoint is communicated over the BCL (i.e., SCP Terminals TB2-7, -8). It is "on" whenever the BAS system CWS is a valid setpoint and not OFF.
3. Scheduled system chilled water setpoint is entered using the SCP's "SCHEDULE" programming menu; see Figure 9. It is "on" whenever the scheduled CWS value is a valid setpoint and not OFF.
4. Represents the status of the SCP's "Scheduled System Enable/Disable" binary input circuit at Terminals TB3-5 and -6.
5. Major SCP control states are defined as follows:
   a. "Off" = a "ready" status;
   b. "Cooling" = powered cooling or free cooling operation is enabled.

Table 12 indicates the control hierarchy in effect when the SCP's system-level free cooling function is used.

Figure 14
Typical SCP/Chiller System Application

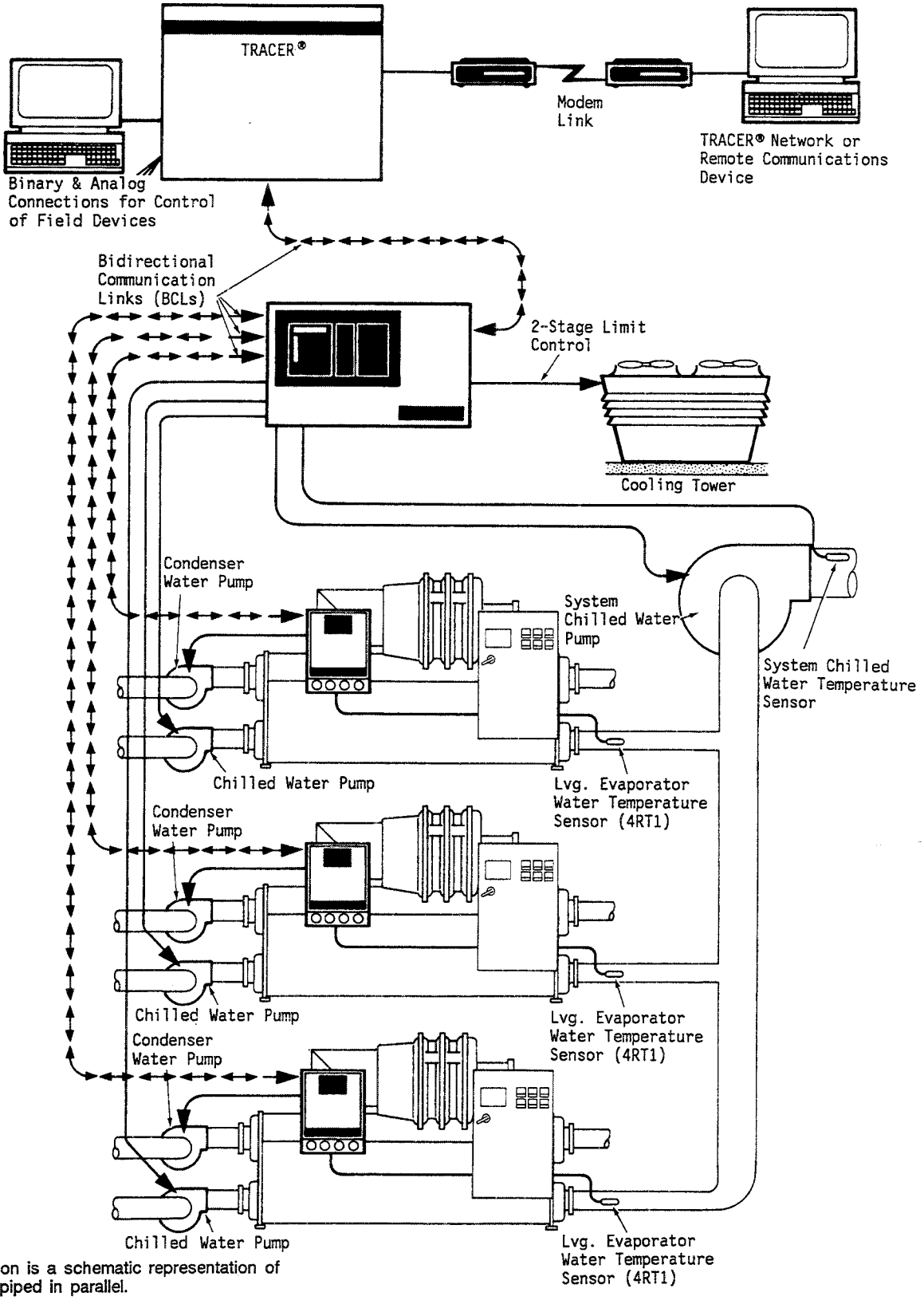

Note: This illustration is a schematic representation of 3 CenTraVac chillers piped in parallel.

The availability of these (and other) SCP control functions in a particular system application is determined by the field-installed input and output wiring connections. Refer to Figure 15; notice that SCP functions can be categorized into 3 "capability" levels, with each level defined by the types of inputs and outputs (i.e., I/O's) required.

[ ] "Level 1" input/output wiring connections must be field-installed to make the SCP operational. Once these connections (i.e., 120 VAC power supply, system chilled water temperature sensor, and CenTraVac BCL) are complete, the SCP is capable of the following standard control functions:

a. coordinated control of as many as 3 CenTraVac chillers;
b. 7-day, 24-hour scheduling;
c. chiller sequencing and automatic rotation;
d. system chilled water temperature control;
e. system and individual chiller reporting;
f. manual system control override;
g. manual chiller control overrides and,
h. cooldown.

[ ] "Level 2" input/output connections "tailor" SCP control functions to the requirements of a specific chiller system application. All of the control schemes associated with "Level 2" I/O's are standard, and are available in addition to the basic control functions found at "Level 1".

"Level 2" SCP control capabilities include:

a. chilled water reset;
b. remote system enable/disable;
c. remote free cooling enable/disable;
d. electrical demand limit control;
e. bidirectional communication with a Trane BAS or monitoring system;
f. system chilled water pump control;
g. individual chiller evaporator water pump control; and,
h. external alarm function.

Note: Selection of any--or all--"Level 2" control functions will not disable any other SCP function.

[ ] "Level 3" input/output connections are associated with SCP control features that are purchased as options. Two of the 3 functions found at this level will deactivate some of the SCP's standard control functions.

A brief description of all 3 optional control features--including any limitations--is provided below.

a. Thermostatically-Controlled, Automatic Free Cooling. Field installation of the optional free cooling temperature sensor enables the SCP to decide when it is appropriate to initiate system-level free cooling. Use of this optional control function overrides the SCP's remote free cooling binary input.

b. Condenser Limit Control. Use of this option--which consists of an electronic sideboard and 4 temperature sensors--will not disable any other SCP control function. Once installed, the sensors detect unit refrigerant temperature differences between the condensers and evaporators, triggering activation of 2 SCP output relays. Enable/disable setpoint values for these relays are operator-programmable.

c. Generic BAS. Comprised of an electronic sideboard and 6 resistors, this option requires field installation of up to 6 analog input lines (i.e., 2 per chiller) between the generic BAS and the SCP. A DIP switch located on the sideboard serves as an "on/off" switch for the generic BAS/SCP interface.

It is important to realize that nearly half of the SCP's inputs, outputs and associated control functions become inoperative when the generic BAS option is installed and enabled. Refer to the asterisked items in Figure 15.

* * * * *

The remainder of this section discusses the basic operation of a number of major SCP control functions; these include:

[ ] system chilled water temperature and current limit control;
[ ] chiller sequencing and automatic rotation;
[ ] cooldown;
[ ] chilled water reset;
[ ] manual and automatic free cooling;
[ ] bidirectional communication with a Trane BAS;
[ ] electrical demand limiting;
[ ] system chilled water and unit evaporator pump control;
[ ] optional generic BAS interface; and,
[ ] optional condenser limit control.

Note: When reviewing the operation of these control functions, remember that the SCP can--in turn--be controlled by a higher-level device. Three "avenues" for SCP interaction with a supervisory controller are available:

1. a bidirectional communication link (i.e., Trane BAS only);

2. an optional analog interface (i.e., generic BAS); and,

3. a "scheduled system enable/disable" binary input.

For explanations of the SCP's scheduling and reporting functions, refer to SCP699 Operator Interface. Manual system- and chiller-level overrides are described where appropriate throughout this manual.

Figure 15
SCP Control Functions and Input/Output Requirements

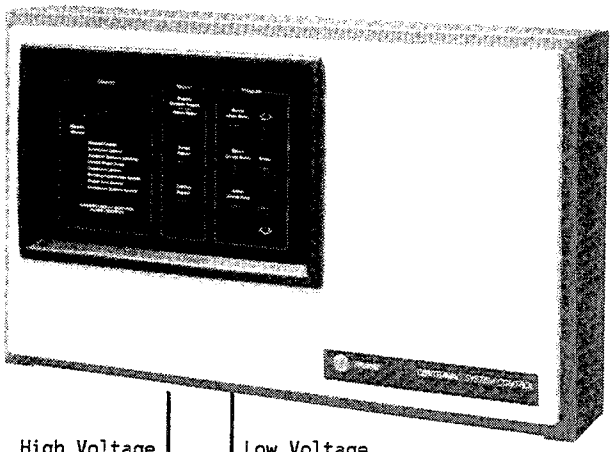

Art No. RF/CTV-190C

High Voltage (115 VAC)

"Level 1" Inputs/Outputs (Note 1)
[ ] 115 VAC Power Supply

"Level 2" Inputs/Outputs (Note 2)
[*] System Chilled Water Pump Relay, energized when system requires cooling
[ ] System "External" Alarm Relay (NO/NC)
[*] Chiller Evaporator Pump Relays, 1 relay per chiller; energized before corresponding chiller is started

"Level 3" Inputs/Outputs (Note 3)
[ ] Condenser Water Control Relays (2)

Low Voltage (< 30 Volts)

"Level 1" Inputs/Outputs (Note 1)
[*] System Leaving Chilled Water Temperature Sensor (i.e., optional for single-chiller systems, but req'd. for system-level CWR)
[ ] BCL to Chiller Control Panel(s)

"Level 2" Inputs/Outputs (Note 2)
[*] System Entering Chilled Water Temperature Sensor (Req'd. for Chilled Water Reset)
[ ] Scheduled System Enable/Disable (Req'd. for Remote On/Off)
[ ] Free Cooling Enable/Disable (Req'd. for Remote FC On/Off)
[*] Electrical Demand Meter Pulse Input (Req'd. for Elec. Demand Limit)
[ ] BCL to Trane BAS or Monitor (Req'd. for Trane BAS Control)

"Level 3" Inputs/Outputs (Note 3)
[*] Free Cooling Temperature Sensor (Req'd. for Thermostatically-Controlled FC)
[ ] Condenser Water Temperature Sensor, incl. 3 additional sensors for connection at chiller(s) (Req'd. for Condenser Limit Control)
[ ] Generic BAS, 2 analog inputs per chiller

Notes:

1. "Level 1" I/O field wiring connections are required to enable SCP to function at its minimum capability, which includes these standard control functions:
- – multiple-unit control for up to 3 CenTraVacs
- * – 7-day, 24-hour scheduling
- * – chiller sequencing and automatic rotation
- * – system chilled water temperature control
- – system and individual chiller reporting
- * – manual system override
- – manual chiller override(s)
- * – cooldown ("soft start")

2. "Level 2" I/O field wiring connections can be made selectively if associated function is desired for a particular system application. All "Level 2" functions are standard, and will not disable any "Level 1" functions; they include:
- * – chilled water reset
- – remote system enable/disable
- – remote free cooling enable/disable
- * – electrical demand limit control
- – bidirectional communication with Trane BAS or monitor
- * – system chilled water pump control
- * – individual chiller evaporator pump control
- – field-supplied/-installed alarm device

3. "Level 3" I/O field wiring connections are associated with 3 optionally purchased SCP control functions. These optional functions are listed below; notice that 2 of them deactivate a number of standard SCP control functions.

- – thermostatically-controlled automatic free cooling (i.e., overrides remote free cooling enable/disable binary input)
- – condenser limit control (i.e., does not disable any other SCP function)
- – generic BAS (i.e., disables all asterisked I/O's and functions; see asterisked note at right)

***Generic BAS disables all asterisked I/O's and functions when installed and enabled, though system leaving and entering water temperature sensors may still be installed for readout display if desired.**

System Chilled Water Temperature Control

Note: System-level chilled water temperature control is not available when the SCP is used in a generic BAS application.

Designed to perform overall temperature control for CenTraVac water chiller systems, the SCP699 panel determines what coordinated unit chilled water (and current limit) setpoint(s) are needed to maintain a stable system leaving chilled water temperature. To do this, the SCP compares the effective system chilled water setpoint with the actual system leaving chilled water temperature.

Notice that the operator can enter a system chilled water setpoint (SCWS) in several ways; he can (1) schedule a setpoint using the SCP's "SCHEDULE" program, (2) enter a manual setpoint with the SCP's "SYSTEM" program, (3) enable a Trane BAS to communicate a setpoint value to the SCP over the Tracer BCL, or (4) allow a generic BAS to send unit setpoint reset values to the SCP via an optional analog interface.

Since several system chilled water setpoint values may exist at one time, the SCP must decide which value to use (i.e., which takes precedence, or is the effective SCWS). This temperature control decision is based on the setpoint priority shown in Table 8 and described below:

1. Use the **manual SCWS** value (i.e., see "'System' Program" in the section entitled SCP699 Operator Interface).

If this "SET =" entry is "AUTO", then . . .

2. Use the **Trane BAS-issued SCWS** value.

If there have been no BAS communications for the last 15 minutes, or if the BAS setpoint is AUTO, then . . .

3. Check the **status of the "SCP enable" contacts** (i.e., "Scheduled System Enable/Disable" binary input circuit; SCP Terminals TB3-5, -6).

When this circuit is open, shut off the system; if the circuit is closed, then . . .

4. Use the **scheduled SCWS** value.

Note: Keep in mind that an SCWS value issued by a Trane BAS--or scheduled at the SCP--can be modified by the chilled water reset function (if applicable). In turn, the resulting SCWS value can then be altered again by the cooldown control function (if applicable). (Both of these control functions are described later in this section.)

Once the effective SCWS is established, the SCP compares it with the actual system leaving water temperature to determine if a cooling requirement exists.

In multiple-chiller systems, this temperature input is provided by a sensor that ships with the SCP and is field-installed in the common leaving (supply) chilled water line; here, it measures a mixed leaving water temperature.

Where the SCP is connected to a single chiller, a system sensor is not required (i.e., unless chilled water reset is also desired). Instead, the SCP can use the temperature "seen" by the chiller's leaving evaporator water temperature sensor (4RT1).

Note: When only 1 chiller is connected to the SCP--and the SCP's leaving chilled water temperature sensor is not installed, that unit must be assigned a chiller address of "1". (See "UCP695 DIP Switch Setup" on page 8.)

If system cooling is required, the SCP sends appropriate unit chilled water setpoints to each of the communicating chillers (i.e., with chiller switches set at AUTO/REMOTE). When only 1 chiller is controlled by the SCP (and a system chilled water temperature sensor is not installed), it gives that unit a chilled water setpoint equal to the SCWS.

Table 8
System Chilled Water Setpoint Priority (1)

Manual SCP Setpoint	Trane BAS Setpoint	Scheduled SCP Setpoint	SCP Enable/Disable Contact Closure (3)	Effective System Chilled Water Setpoint
1-99 F	------	------	------	1-99 F
Off	------	------	------	Off
Auto	1-99 F (2)	------	------	1-99 F
Auto	Off	------	------	Off
Auto	Auto	------	Open	Off
Auto	Auto	1-99 F (2)	Closed	1-99 F
Auto	Auto	Off	------	Off

"------" = A setpoint value entered at this control level will not determine the actual system chilled water setpoint (SCWS).

Notes:
1. This setpoint hierarchy is only applicable when the generic BAS option is not installed/enabled.
2. Trane BAS and scheduled SCP system chilled water setpoints can be modified by the SCP's chilled water reset and cooldown control functions.
3. This contact closure input is "read" at SCP Terminals TB3-5 and TB3-6; these terminals must be jumpered if not used.

Note: Like the effective SCWS, the actual unit chilled water setpoint value used by the chiller control panel is also subject to a setpoint priority; this hierarchy is summarized in Table 9 and described in Items "a" through "d" below. Notice, too, that although chilled water setpoint values at the SCP range from 1 F to 99 F, the chiller control panel will not accept a setpoint value lower than 37 F (i.e., "standard"-range units).

a. Use the **UCP695 CWS potentiometer setting** if the chiller switch is set at AUTO/LOCAL.

If the chiller switch is set at AUTO/REMOTE, then . . .

b. Use the **manual SCP unit CWS** value entered in the "CHILLER" programming menu.

If this "SET = " entry is "AUTO", then . . .

c. Use the **manual Trane BAS unit CWS** value communicated over the BCL.

If the unit CWS value sent by the Trane BAS is "AUTO", then . . .

d. Use the **calculated unit CWS** that is derived from the SCWS by the SCP's control algorithm.

Two priorities are "built into" the SCP's temperature control logic. As it calculates individual unit chilled water setpoints, it first attempts to equalize chiller loading as much as possible by evaluating each chiller's electrical current load level. Then, it tries to equalize the unit chilled water setpoints as much as possible.

Once a chilled water setpoint is communicated to a particular chiller, it is that unit's responsibility to control its own evaporator leaving water temperature. In other words, the UCP695 chiller control panel is entrusted to modulate its own inlet guide vanes and restrict their movement when limiting is appropriate.

It is important to realize that this "step-and-wait" method of control can result in slow responses to load changes. That is, after sending a new chilled water setpoint to a given unit, the SCP must wait until that unit's leaving chilled water temperature is within 1 F of setpoint for 75 seconds before it can evaluate the effect of the setpoint change.

Table 9
Unit Leaving Chilled Water Setpoint Priority (1)

Chiller Status (2)	UCP695 CWS Pot. Setting (3)	SCP Manual Unit CWS (4)	Trane BAS Unit CWS (5)	SCP Calculated Unit CWS (6)	Effective Unit CWS
Standby	-------	-------	-------	-------	OFF
Alarm (7)	-------	-------	-------	-------	OFF
Auto/Local	37-60 F	-------	-------	-------	37-60 F
Auto/Remote	-------	1-99 F	-------	-------	37-60 F (8)
Auto/Remote	-------	Off	-------	-------	Off
Auto/Remote	-------	Auto	1-99 F	-------	37-60 F (8)
Auto/Remote	-------	Auto	Off	-------	Off
Auto/Remote	-------	Auto	Auto	1-99 F	37-60 F (8)
Auto/Remote	-------	Auto	Auto	Off	Off

"——" = A setpoint value entered at this control level will not determine the actual unit chilled water setpoint (UCWS).

Notes:
1. This setpoint hierarchy is only applicable when the generic BAS option is not installed/enabled.
2. Unit status is determined by the position of the chiller switch on the front of the UCP695 chiller control panel.
3. UCP695 chilled water setpoint adjustments extend from 37 F thru 60 F for standard-range chillers, and 20 F thru 70 F for extended-range chillers.
4. Manual SCP chiller setpoints are entered using the "CHILLER" program menu; see the SCP699 Operator Interface section of this manual.
5. Specific Trane BAS-issued chiller setpoints are communicated to the appropriate chillers via the BCLs that join the BAS, SCP and chillers.
6. "Calculated" unit CWS' are derived from the effective SCWS by the SCP's control algorithm.
7. "Alarm" status indicates the existence of a latching chiller diagnostic condition; manual reset at the UCP695 panel is required to resume chiller operation. Reset the SCP to de-energize the alarm relay.
8. Though Trane BAS-issued unit CWS values–as well as manual or "calculated" SCP CWS values–may be any value between 1 F and 99 F, the UCP695 chiller control panel will only accept what it considers to be a valid entry (i.e., see Note 3). If the Trane BAS- or SCP-issued CWS value is less than 37 F, the effective unit setpoint is 37 F; likewise, if the Trane BAS- or SCP-issued CWS value is greater than 60 F, the effective unit setpoint is 60 F.

Chiller Start-Up and Shutdown

When the system cooling requirement is small enough to be satisfied by only 1 chiller, the SCP allows the first chiller in the start rotation to determine when it will start and stop based on the start differential setpoint selected at the chiller's UCP695 control panel.

Additional chillers are started when the cooling requirement is high enough so that any units presently running are either operating: (1) above the "unit sequence load setpoint", or (2) in a unit limit mode (e.g., evaporator limit). Regardless of how much cooling is required, however, the SCP will limit chiller start-ups to 1 every 6 minutes.

The SCP evaluates unit electrical loads and guide vane positions to decide when to turn off chillers. If the actual current load of each operating chiller is less than the "unit sequence limit setpoint"–or if the chillers' vanes are closed, the SCP will shut down a chiller.

By monitoring the current loads and vane positions of those chillers still running, the SCP uses the same criteria to determine whether another chiller should be turned off.

As long as the SCP is providing normal temperature control, it limits chiller shutdowns to 1 every 6 minutes. However, if the chiller system is scheduled "off", the SCP will shut down any operating units at 1-minute intervals.

Note: Unit sequence load and limit setpoints, as well as the chiller start rotation, are entered with the SCP's "CHILLER" program. Setup instructions for this program are provided in the SCP699 Operator Interface section of this manual.

Temperature Control Near Setpoint

Whenever the actual system leaving chilled water temperature is within 10 F of the system chilled water setpoint, the SCP "fine-tunes" the unit chilled water setpoints until the system chilled water temperature falls within the SCWS deadband range (i.e., ± 1 F).

SCP control logic ensures that unit chilled water setpoint (CWS) changes are limited to 1 F per minute, and that only 1 chiller is given a CWS change per minute.

Further, the SCP will only issue unit CWS changes if all operating chillers have been in control for the last 75 seconds. (If an operating chiller is not in control, the SCP will still issue unit CWS changes if that unit is running in the evaporator- or condenser-limit mode.)

Note: While the SCP will not send a lower CWS to a chiller operating in an evaporator- or condenser-limit mode, that unit will be the first to receive a higher CWS.

Internal (Fast) Cooldown

Designed to bypass the normal "step-and-wait" method of control, internal (or "fast") cooldown allows the SCP to bring the actual system leaving water temperature within proximity of the SCWS in an acceptable period of time.

To do this, the SCP gives the first chiller started a unit chilled water setpoint equal to the system setpoint; it then monitors the system leaving water temperature. If this temperature drops at a sufficient rate, no other chillers will be started. However, if the SCP determines that the temperature is not falling quickly enough, it will bring additional chillers on line (i.e., but no faster than 1 chiller every 5 minutes).

Once the system leaving water temperature is within 5 F of the system chilled water setpoint, the SCP issues new unit chilled water setpoints that are slightly higher than the leaving water temperature. This allows the chillers to unload slowly when the system chilled water temperature is rapidly approaching setpoint.

System Current Limit Control

Besides providing overall temperature control for the chiller system, the SCP also monitors and regulates the current draw of all connected–and controlled–chillers. To do this, the SCP checks the individual chiller current loads reported over the CenTraVac BCL, and compares the sum of these loads to an operator-programmable system current limit setpoint (SCLS).

Note: Setpoint values for the system current limit setting range from 0% through 100% of the total chiller RLA (i.e., in increments of 1%), and AUTO. See "System Setup: Current" in the SCP699 Operator Interface section of this manual.

If the percentage of total chiller RLA "in use" exceeds the system current limit value, the SCP will begin to unload chillers by sending the unit control panels current limit setpoints below their reported electrical load levels. Once the total chiller current load falls below the SCLS, new, increased unit current limit settings will be issued.

Keep in mind that the SCP will current-limit system operation whenever the SCLS is violated regardless of the existing cooling requirement!

Like the system chilled water setpoint, the operator can also enter a system current limit setpoint (SCLS) in 1 of 2 ways. He can either (1) select the desired manual SCLS using the SCP's "SYSTEM" program, or (2) enable a Trane BAS to communicate an SCLS over the Tracer BCL.

If an operator-entered current limit setpoint is not established at either of these levels, the SCP will use a default setting of 100%.

Since as many as 3 system current limit setpoint values may exist at one time, the SCP must decide which value takes precedence–or is the effective SCLS. It selects a controlling SCLS value on the basis of the setpoint priority shown in Table 10 and described below:

1. Use the **manual SCLS** value; but if "LIM. = " is "AUTO", then . . .

2. Use the **Trane BAS-issued SCLS** value.

If there have been no BAS communications for the last 15 minutes, or if the BAS setpoint is AUTO, then . . .

3. Use the **SCP default setting** (i.e., "LIM. = 100%").

Note: Remember that either the Trane BAS-issued SCLS value–or the SCP's default SCLS–can be modified by the cooldown function (if applicable). In turn, the resulting SCLS value can then be altered again by the electrical demand limit function (if applicable). (Both of these control functions are described later in this section.)

Determination of an effective current limit setpoint at the unit level is subject to another control hierarchy (see Table 11) that hinges on:

1. the position of the chiller switch located on each UCP695 chiller control panel; and,

2. what UCP695 chiller panel control logic will accept as a valid unit current limit setpoint.

Table 10
System Current Limit Setpoint Priority (1)

Manual SCP Setpoint	Trane BAS Setpoint	SCP Default Setpoint	Effective System Current Limit Setpoint
0-100% RLA	-------	-------	0-100% RLA
Auto	0-100% RLA (2)	-------	0-100% RLA
Auto	Auto	100% RLA (2)	100% RLA

"——" = A setpoint value entered at this control level will not determine the actual system current limit setpoint (SCLS).

Notes:
1. This setpoint hierarchy is only applicable when the generic BAS option is not installed/enabled.
2. Trane BAS and SCP default system current limit setpoints can be modified by the SCP's cooldown and electrical demand limit control functions.

Table 11
Unit Current Limit Setpoint Priority (1)

Chiller Status (2)	UCP695 CLS Pot. Setting (3)	SCP Manual Unit CLS (4)	Trane BAS Unit CLS (5)	SCP Calculated Unit CLS (6)	Effective Unit CLS
Auto/Local	40-100% RLA	-------	-------	-------	40-100% RLA
Auto/Remote	-------	0-100% RLA	-------	-------	40-100% RLA (7)
Auto/Remote	-------	Auto	0-100% RLA	-------	40-100% RLA (7)
Auto/Remote	-------	Auto	Auto	0-100% RLA	40-100% RLA (7)

"——" = A setpoint value entered at this control level will not determine the actual unit current limit setpoint (UCLS).

Notes:
1. This setpoint hierarchy is only applicable when the generic BAS option is not installed/enabled.
2. Unit status is determined by the position of the chiller switch on the front of the UCP695 chiller control panel.
3. UCP695 current limit setpoint adjustments range from 40% thru 100% of the compressor RLA.
4. Manual SCP chiller current limit setpoints are entered using the "CHILLER" program menu; see the SCP699 Operator Interface section of this manual.
5. Specific Trane BAS-issued chiller setpoints are communicated to the appropriate chillers via the BCLs that join the BAS, SCP and chillers.
6. "Calculated" unit CLS' are derived from the effective SCLS by the SCP's control algorithm.
7. Though Trane BAS-issued unit CLS values–as well as manual or "calculated" SCP CLS values–may be any value between 0% and 100%, the UCP695 chiller control panel will only accept what it considers to be a valid entry (i.e., see Note 3). Therefore, a UCLS value less than 40% issued by the SCP–or a Trane BAS–results in a 40% CLS at the UCP695 control panel.

Chiller Sequencing and Rotation

Several SCP "CHILLER" program entries allow the operator to establish a start-up order for all connected chillers. (See Figure 13 in SCP699 Operator Interface.) That is, the operator can tell the SCP which chiller (i.e., Unit 1, Unit 2 or Unit 3) to start first and which to start next or last.

Note: Remember that each unit's identity or "address" is assigned with DIP switch block S11 in the UCP695 chiller control panel. (See "UCP695 DIP Switch Setup" in the Start-Up section of this manual.) Do not confuse unit address numbers with the unit sequence numbers assigned in the SCP's "CHILLER" program!

When the SCP decides that another chiller must be brought on-line, it checks the unit sequence setpoint and operating status of each chiller. The chiller started is the unit with the lowest sequence number that isn't already running.

If the same sequence number is shared by more than 1 chiller, the SCP will then compare the unit addresses of these chillers and start the unit with the lowest address number. For example, if the unit sequence setpoint value for both Unit 2 and Unit 3 is "SET = 2", then Unit 2 will be the next chiller started when the SCP brings another unit on-line.

Unit sequence numbers also tell the SCP which chiller to stop first when the cooling requirement is low enough to warrant a unit shutdown, or when the system is scheduled off. In either case, the SCP checks the sequence setpoints of the operating chillers and stops the unit with the highest sequence number.

Again, if more than 1 chiller has the same sequence setting, the unit with the lowest address number is stopped first.

Note: For chiller sequencing alternatives, refer to SCP Setup Recommendations for Typical Systems.

The SCP's "CHILLER" program also includes a "unit sequence rate" setting that provides an opportunity for equalizing chiller duty. By entering a whole number between 1 and 99 (days) for the "RATE = " entry, the operator can set up periodic rotations of the chiller start-up order.

Every time this interval elapses, the SCP automatically increases the unit sequence setting of each chiller by one. Notice that the unit sequence number rotation typically occurs at midnight. However, in applications where the chillers operate continuously, the SCP will not shut down units in order to enforce the unit sequence number rotation. Instead, the assigned sequence numbers are changed only when the SCP starts and stops the chillers as a part of its normal control routine.

Once the sequence setting equals "3", the SCP will assign a sequence value of "1" to that unit at the end of the next rotation period. (In systems where "2" is the highest sequence number programmed, the unit sequence setpoint returns to "1" after it reaches "2".)

If "RATE = 0", the default setting, the SCP will not rotate the chiller start-up order.

Note: A power failure will not prevent the SCP from maintaining the established interval between chiller start-up sequence rotations.

Cooldown Control

The SCP's standard cooldown (or "soft loading") control function allows the operator to control the rate of chiller loading when a significant difference exists between the actual leaving chilled water temperature and the system chilled water setpoint.

By "soft loading" the chiller system in situations like this (e.g., system start-up), the operator not only improves temperature control at unstable loads, but also minimizes the associated electrical demands and unit cycling.

Cooldown operation is governed by two operator-entered control settings at the SCP's "SYSTEM" programming level. First, the operator selects a cooldown current limit setpoint that is to be in effect during the cooldown mode. Expressed as a percentage of total chiller RLA, values for the cooldown current limit setpoint entry range from 0% through 100%. If a numeric value of "0" is entered here, the cooldown control function is turned off.

If a BAS-issued system current limit setpoint exists and is lower than the cooldown "LIM. = " setting, then the SCP will use the BAS value as the effective current limit setpoint during the cooldown period.

Note: While the cooldown current limit setpoint may be set as low as 0%, the UCP695 control panels at the chillers will not accept a setpoint lower than 40%.

The operator must also determine the length of the cooldown period, and can tailor its duration to the constraints of that particular chiller system application. Represented by an "END = " program entry, cooldown periods may last up to 2 hours (i.e., "END = 02.00"), and are incremented in 15-minute intervals.

Remember that the SCP will default to "END = 00.00" unless some other value is entered here, and that this program entry also establishes the minimum "on" time for thermostatically-controlled, automatic free cooling.

Several conditions must be met before cooldown can occur:

1. "AUTO" must be entered for the system- and unit-level chilled water temperature setpoint entries in the SCP's "SYSTEM" and "CHILLER" programming menus.

Note: Cooldown can only modify: (a) a BAS-issued, scheduled, or CWR-based system chilled water setpoint; and (b) a BAS-issued or SCP default system current limit setpoint.

2. A value other than zero must be entered for the cooldown current limit setpoint program entry. (The SCP's default setting--"LIM. = 0"--disables the cooldown control function.)

3. The actual system leaving chilled water temperature must be at least 10 F above the present, effective system chilled water setpoint. (This condition usually exists at system start-up.)

Once cooldown is initiated, the SCP creates a "stepped" sequence of decreasing system chilled water setpoints that approach the desired chilled water temperature within the cooldown time period (i.e., "END = "). However, SCP control logic limits cooldown-initiated setpoint changes to a maximum of 1 F per minute unless "END = 00.00".

Note: If cooldown is enabled when "END = 00.00", the SCP will bring the system to its maximum operating capacity at once--within the constraints of the system current limit function--in order to satisfy the cooling requirement.

Recall that one of the operator-entered, cooldown program entries was a system current limit setpoint. If total chiller electrical demand exceeds the effective current limit value during cooldown operation, the SCP will unload the system–regardless of the present chilled water temperature–until electrical demand is sufficiently reduced.

When system electrical demand is again at an acceptable level, "stepped" reduction of the leaving chilled water temperature will continue until: (1) the desired temperature is attained, (2) the next current limit violation occurs, or (3) the cooldown period expires.

Chilled Water Reset (CWR)

Note: The CWR control function can only modify a system chilled water setpoint that is communicated by a Trane BAS or scheduled at the SCP. See Table 8. Chilled water reset will not affect:

a. a manual, system-level setpoint entry;

b. chillers operating under AUTO/LOCAL control; or,

c. chillers given a manual chilled water setpoint–either at the SCP via the "CHILLER" programming menu, or communicated from a Trane BAS over the BCLs between the BAS, SCP and UCP695 chiller control panels.

Chilled water reset is ideal for water-cooled chiller systems that seldom operate at full load, and do not require the design chilled water temperature at part load. In these applications, the system leaving chilled water temperature can be reset upward using the CWR control function.

Two sensor inputs are required for the CWR control function to operate, so a matched pair of thermistor-type sensors (i.e., part no. 4533-1710-44B) is provided with each SCP. Refer to Figure 16. Notice that one sensor must be field-installed in the common system leaving (supply) chilled water line. Never substitute a chiller leaving-evaporator water temperature sensor (4RT1) for this input!

Placement of the remaining sensor depends on whether "load-" or "ambient-based" chilled water setpoint reset is desired:

[ ] When load-based CWR is selected, the remaining sensor is field-installed in the common system entering (return) chilled water line. The difference between the leaving and entering chilled water temperatures–reflecting system cooling requirements–is then used to calculate a new system chilled water setpoint.

[ ] With the selection of ambient-based CWR, the SCP adjusts the system chilled water setpoint in response to a measured temperature, usually the outdoor ambient. In order to monitor this temperature, the remaining sensor is typically field-installed just inside the building's fresh air intake duct, or on the north exterior wall of the building. (In either case, shelter the sensor from direct sunlight and the elements.)

Selection of the type of chilled water reset desired for a given system application is not only determined by the location of the CWR sensors, but is also a function of 2 operator-programmable control settings:

1. Chilled Water Reset Rate (RATE =). The SCP uses this CWR variable to calculate the amount of reset–in degrees F–that will be applied to either a scheduled or Trane BAS-generated system leaving chilled water setpoint. Values for CWR rate extend from 1% through 199%; entering "0" disables the CWR control function.

2. Chilled Water Reset Setpoint Temperature (SET =). This operator-entered temperature tells the SCP when to enable system chilled water reset, and can be set at any integer value from 1 F through 140 F. Again, entering a "0" for the CWR setpoint will turn off this control function.

Note: Whenever the CWR setpoint temperature is less than or equal to 25 F, load-based CWR is indicated. If the "SET = " value is greater than 25 F, the SCP identifies this control setting as an outdoor ambient temperature.

"Load-based" system CWR is enabled whenever the actual system delta-T is ≤ the CWR "SET = " value. Enablement of "ambient-based" CWR can occur when the actual outdoor temperature is either ≤ ("normal") or > ("reverse") the CWR "SET = " setting. (See "Ambient-Based CWR".)

Instructions for programming the CWR control function are provided under "System Setup: Chilled Water Reset Option" in the SCP699 Operator Interface section of this manual. For your convenience, the CWR program menu is shown in Figure 17.

Figure 16
Installation of CWR Sensor Pair

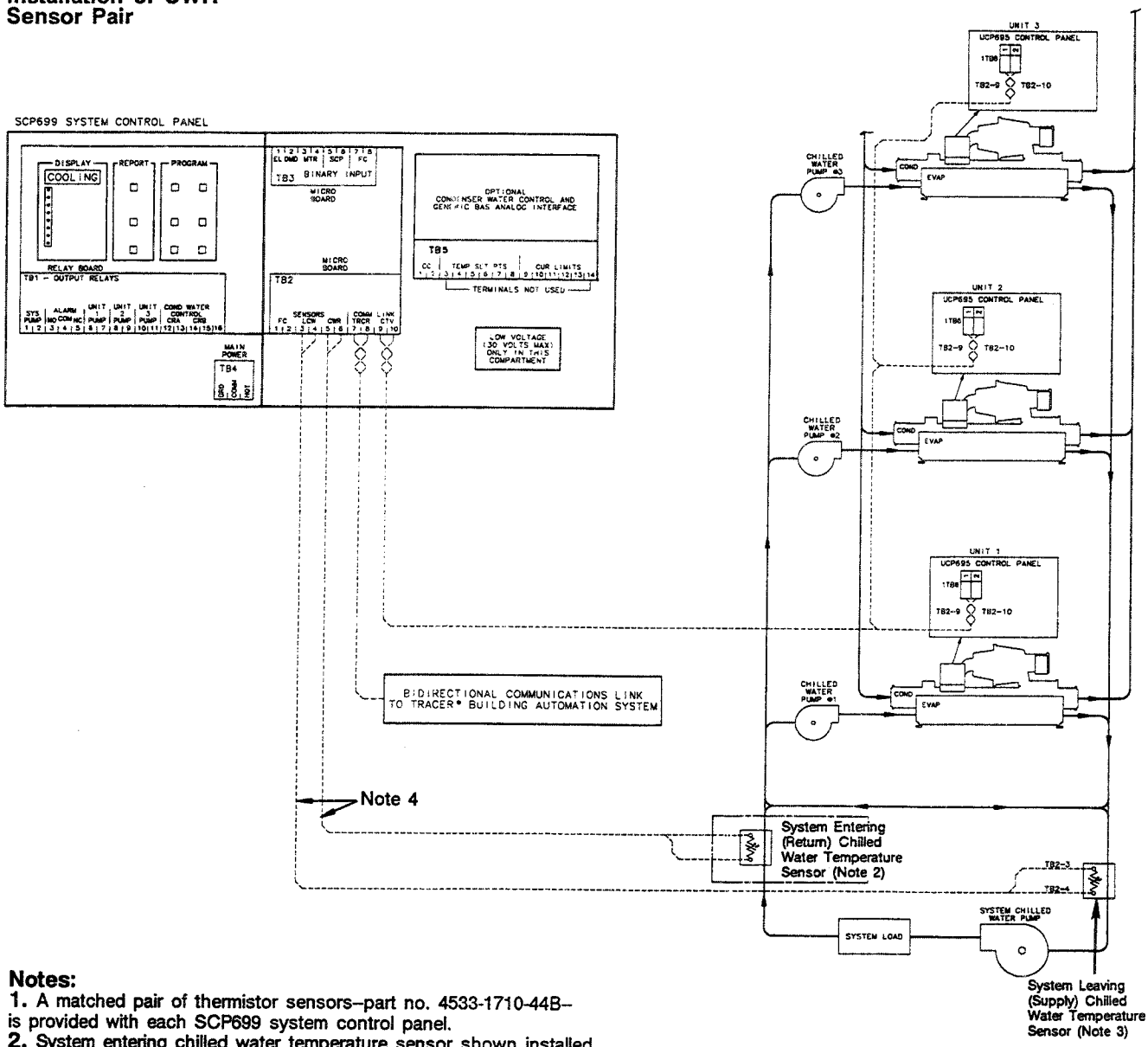

Notes:

1. A matched pair of thermistor sensors–part no. 4533-1710-44B– is provided with each SCP699 system control panel.
2. System entering chilled water temperature sensor shown installed in entering (return) water line for load-based CWR. Alternatively, this sensor may be installed in the outdoor air for ambient-based CWR.
3. For single-chiller applications where CWR at the SCP is desired, the SCP's system leaving chilled water temperature sensor must be installed.
4. Sensor wiring is 30V or less, 14-18 AWG 600V wire; it must be shielded or run in conduit w/conductors carrying 30V or less. Following are maximum conductor lengths:
   - 5,000 ft. for 14 AWG
   - 2,000 ft. for 16 AWG
   - 1,000 ft. for 18 AWG
5. Illustrated arrangement of chilled and condenser water piping is not a piping schematic; use it only to identify temperature sensor locations.
6. Dashed lines (—) represent field-installed wiring; phantom lines (— - —) indicate available sales options.
7. All field wiring must be in accordance with the National Electric Code (NEC), and state and local requirements.

WARNING
Disconnect electrical power supply to prevent injury or death due to electrical shock.

Caution
Use copper conductors only to prevent equipment damage.

Drwg. 4532-3789B

Figure 17
Operator-Programmable Entries for System Chilled Water Reset

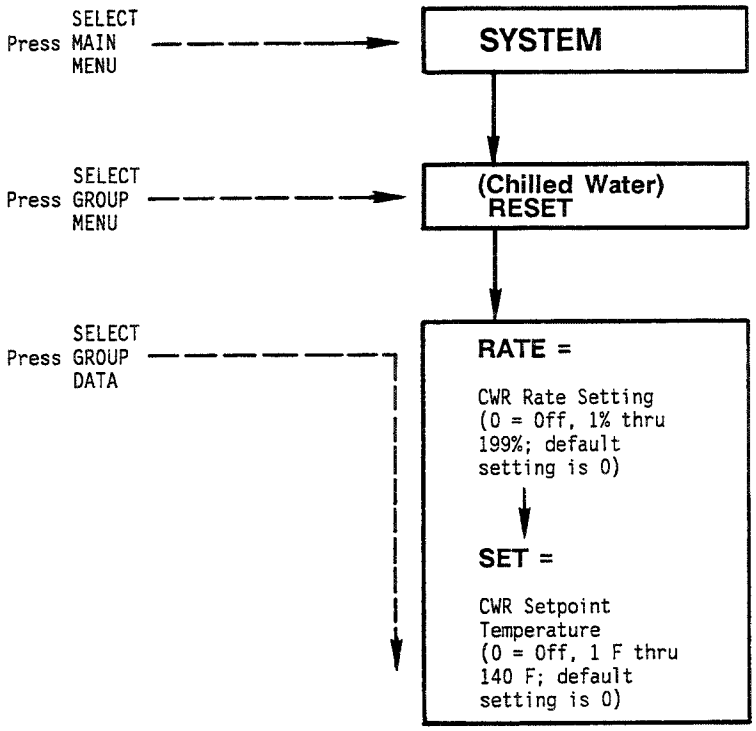

Note: A CWR "SET = " value ≤ 25 F indicates load-based chilled water reset; ambient-based chilled water reset is indicated by a CWR "SET = " value > 25 F. In order to enable the CWR control function, a setting other than "0" must be entered for both "RATE = " and "SET = ".

Load-Based CWR

The SCP looks at several sensor and operator-entered inputs to arrive at a reset system chilled water setpoint (RSCWS) that reflects the system's reduced cooling requirements. These variables include the:

[ ] actual system leaving (supply) chilled water temperature (STMP);

[ ] actual system entering (return) chilled water temperature (AUXTMP);

[ ] operator-entered CWR rate between 1% and 199% (RATE);

[ ] operator-entered CWR setpoint temperature between 1 F and 25 F (SET); and,

[ ] scheduled or BAS-generated system chilled water setpoint (SCWS).

Based on this information, the SCP then calculates the RSCWS using this equation:

$$RSCWS = SCWS + RATE\ [CWR\ SET + STMP - AUXTMP]$$

To use this equation correctly, remember that:

1. Decimal values must be used for the RATE variable in this equation. (Divide the operator-entered "RATE = " value by 100.)

2. The SCP's CWR control function will not use a RSCWS value that is lower than the SCWS, so the effective RSCWS is always ≥ the SCWS.

3. Increasing the CWR "RATE = " and/or "SET = " values results in more reset.

4. If you know (1) when you want to enable the CWR function (CWR SET), and (2) how many degrees of reset are desired (RSCWS), this equation can be rearranged to solve for the appropriate CWR rate setting:

$$RATE = \frac{RSCWS - SCWS}{[CWR\ SET + STMP - AUXTMP]}$$

5. The effective RSCWS value is always ≤ 99 F.

Review the examples that follow to ensure that you understand both how to calculate a load-based reset system chilled water setpoint, and how this reset value changes with the operator-entered CWR rate and setpoint temperature control settings.

* * * * *

First, let's look only at how the value entered for the CWR rate can affect the scheduled (or BAS-generated) system chilled water setpoint. Review Examples 1 through 3 below; Figure 18 provides graphs that illustrate these situations.

Figure 18
Load-Based CWR—
Variable RATE Settings

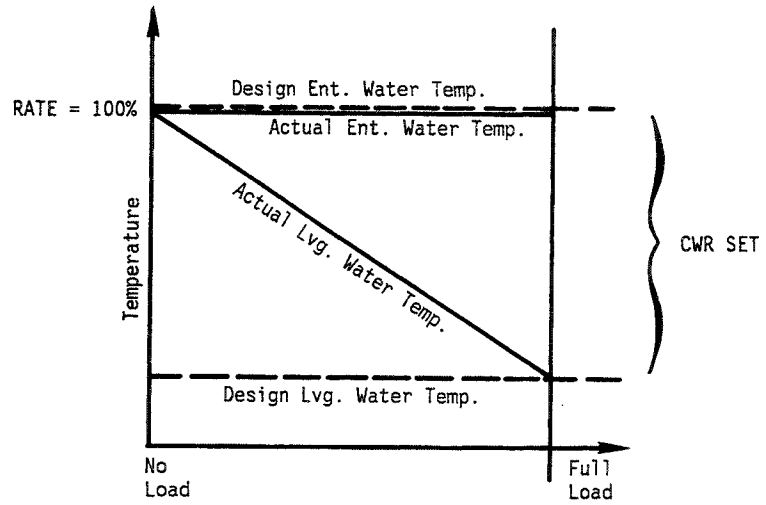

Example 1
RATE = 100%
CWR SET = System Design Delta-T

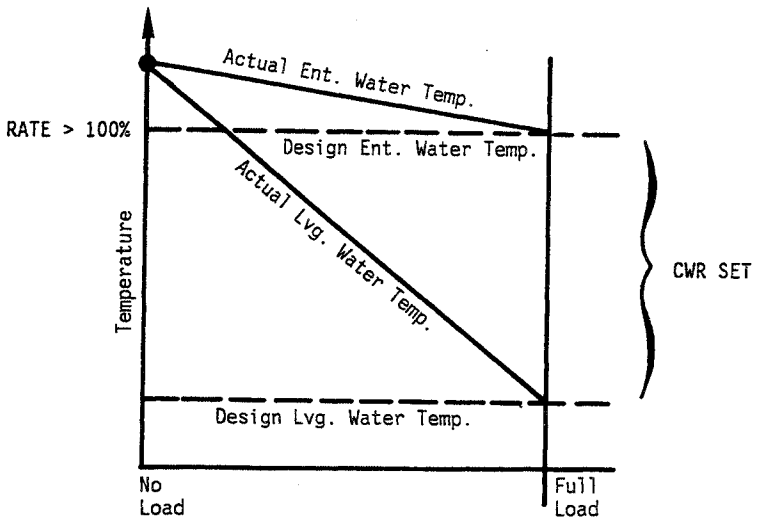

Example 2
RATE > 100%
CWR SET = System Design Delta-T

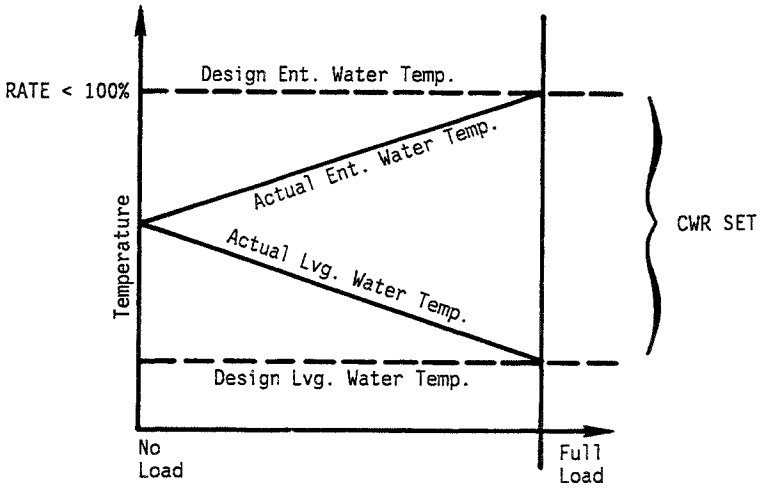

Example 3
RATE < 100%
CWR SET = System Design Delta-T

Notice that the same value–"SET = 10"–is entered for the CWR setpoint temperature in each of these examples (i.e., although any value ≤ 25 F could be selected).

Example 1. At full load, "System A" is designed to operate with a leaving (supply) chilled water temperature–SCWS–of 45 F, and a common entering-evaporator (return) temperature of 55 F; design delta-T is 10 F.

Presently, System A is only partially loaded, and:
SCWS = 45 F,
STMP = 45 F,
AUXTMP = 50 F,
CWR SET = 10 F, and,
RATE = 100% (i.e., 1.0).

To determine the reset system chilled water setpoint (RSCWS) for this set of operating conditions:

RSCWS = 45 F + 1.0 [10 F + 45 F - 50 F]
RSCWS = 45 F + 5.0 F
RSCWS = 50 F

Refer to the graph labelled "Example 1" in Figure 18. Notice that a constant return water temperature can be attained by selecting a 100% CWR rate when the CWR setpoint is equal to (or greater than) the system design delta-T.

Selection of CWR rate and setpoint temperature values that result in a constant return water temperature may be particularly desirable in parallel-piped systems with 2 chillers and 1 system pump or 2 individual unit pumps. When the system is running at part load (i.e., 1 chiller on and the other off), the operative unit's chilled water setpoint is never stepped below design as long as the system return water temperature remains constant at a level equal to–or greater than the design return water temperature at full load. (See SCP Setup Recommendations for Typical Systems.)

Example 2. Given the same operating conditions listed in Example 1, but with an increased CWR rate–150% or 1.5, notice that the calculated reset chilled water setpoint also increases:

RSCWS = 45 F + 1.5 [10 F + 45 F - 50 F]
RSCWS = 45 F + 7.5 F
RSCWS = 52.5 F or 53 F

(Calculated RSCWS values are always rounded to the nearest integer.)

Example 3. Finally, suppose that a value less than 100% (e.g., 80% or 0.8) is entered for the CWR rate:

RSCWS = 45 F + 0.8 [10 F + 45 F - 50 F]
RSCWS = 45 F + 4 F
RSCWS = 49 F

Compare the RSCWS values obtained in Examples 1, 2 and 3; notice that the degree of reset increases proportionately with the CWR rate setting.

* * * * *

Now let's look at how various CWR setpoint values can affect the degree of reset applied to System A's chilled water setpoint. Review Example 1 again, along with Examples 4 and 5; in each instance, a value of 100% was selected for the CWR "RATE = " program entry. (See Figure 19 for graphs illustrating these examples.)

Example 4. As in Example 1, entering a 100% CWR rate and a CWR setpoint greater than the system design delta-T also yields a constant return temperature. (Compare the corresponding graphs in Figure 19.)

RSCWS = 45 F + 1.0 [12 F + 45 F - 50 F]
RSCWS = 45 F + 7.0 F
RSCWS = 52 F

Example 5. Suppose that the CWR setpoint is changed to a value less than the system design delta-T. Since System A's design delta-T is 10 F, let's use CWR "SET = 8":

RSCWS = 45 F + 1.0 [8 F + 45 F - 50 F]
RSCWS = 45 F + 3.0 F
RSCWS = 48 F

If the CWR setpoint value is low enough, the calculated RSCWS value will be less than the scheduled system chilled water setpoint. However, SCP control logic ensures that the effective RSCWS temperature is always equal to–or greater than–the value of SCWS. This is demonstrated below, and illustrated in the graph labelled "Example 5" in Figure 19.

RSCWS = 45 F + 1.0 [4 F + 45 F - 50 F]
RSCWS = 45 F + -1.0 F
RSCWS = 44 F, but 44 F is not ≥ 45 F,
so
RSCWS = 45 F

Ambient-Based CWR

The SCP relies on essentially the same sensor and operator-entered inputs to perform ambient-based chilled water reset that it uses for load-based CWR:

[ ] an operator-entered CWR rate between 1% and 199% (RATE);

[ ] an operator-entered CWR setpoint temperature between 26 F and 140 F (SET);

[ ] a scheduled–or Trane BAS-issued–system chilled water setpoint; and,

[ ] the actual outdoor ambient temperature (AUXTMP).

But in addition to these variables, the SCP also checks the position of its No. 4 configuration DIP switch to determine whether the operator has selected the "normal" or "reverse" mode of ambient chilled water reset.

Note: DIP Switch No. 4's position only affects the ambient-based chilled water reset control function (i.e., CWR setpoint temperature is > 25 F). Its position has no effect on load-based CWR.

* * * * *

"Normal" CWR. This mode of ambient-based chilled water reset is selected by positioning configuration DIP Switch No. 4 in the OFF position. In effect, this tells the SCP to calculate a reset system chilled water setpoint (RSCWS) using this equation:

RSCWS = SCWS + RATE [CWR SET - AUXTMP]

Figure 19
Load-Based CWR—
Variable CWR SET Temperatures

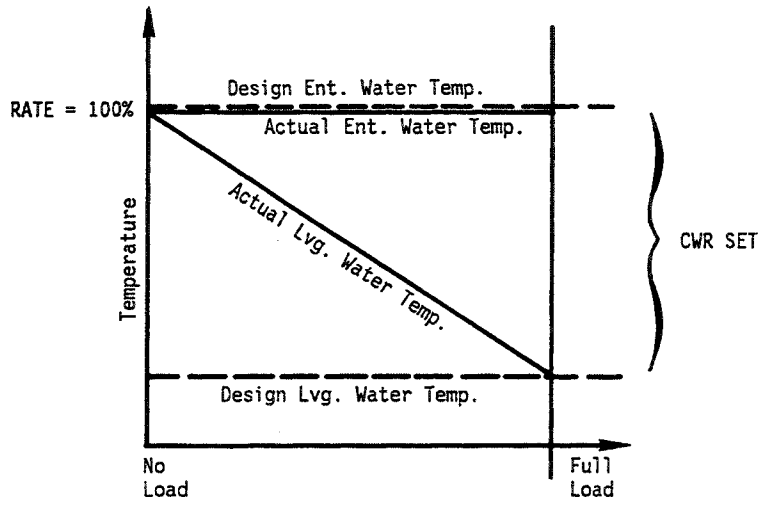

Example 1
RATE = 100%
CWR SET = System Design Delta-T

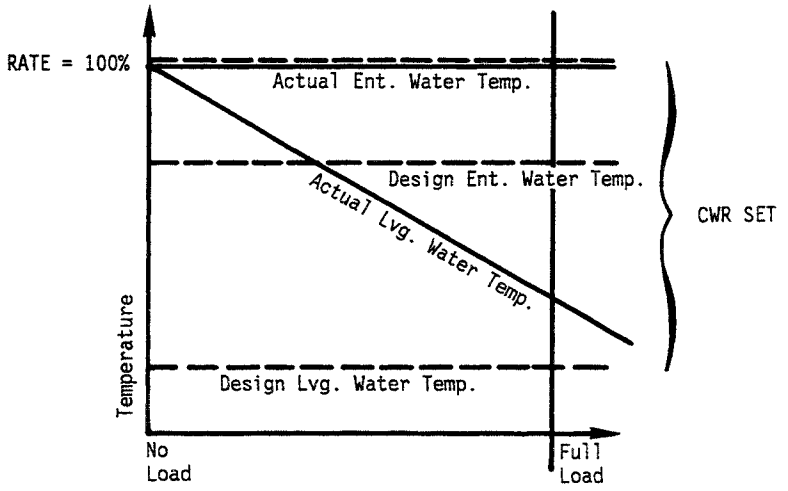

Example 4
RATE = 100%
CWR SET > System Design Delta-T

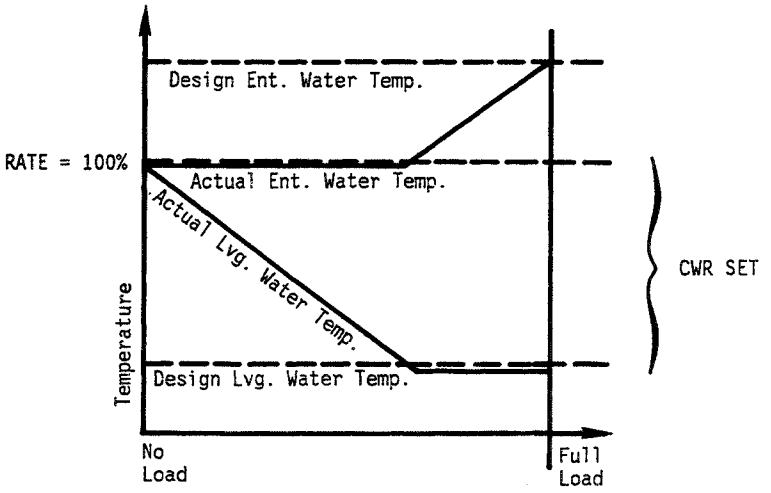

Example 5
RATE = 100%
CWR SET < System Design Delta-T

To correctly interpret this equation, remember that:

1. Decimal values must be used for the RATE variable, so divide the operator-entered "RATE = " setting by 100.

2. As the actual outdoor ambient falls, the SCP resets the system chilled water setpoint upward.

3. Increasing the CWR rate setting results in a greater amount of reset.

Figure 20 illustrates the overall relationship between the actual outdoor ambient temperature, CWR setpoint and rate values, and the resulting RSCWS on a graph. In particular, notice that RSCWS is always ≥ SCWS; control logic prevents the SCP from resetting the chilled water setpoint below the originally scheduled (or BAS-issued) value.

Review the examples that follow to ensure that you understand the correlation between CWR rate and reset system chilled water setpoint in "normal" ambient-based chilled water reset. (In each instance, the same value–"SET = 90"–is entered for the CWR setpoint temperature, although any value > 25 F could be selected).

Example 1. "System B" is designed to operate at full load when the outdoor ambient temperature is 90 F, and to produce 45 F chilled water. At the present time, the outdoor air sensor indicates a temperature of 80 F.

Here is a summary of the CWR input values for System B:
SCWS = 45 F,
STMP = 45 F,
AUXTMP = 80 F,
CWR SET = 90 F,
RATE = 100% (i.e., 1.0), and,
DIP Switch No. 4 = OFF/"normal".

To determine how many degrees of reset will be added to the system chilled water setpoint when a CWR rate of 100% is selected:

RSCWS = 45 F + 1.0 [90 F - 80 F]
RSCWS = 45 F + 10.0 F
RSCWS = 55 F

If the outdoor air temperature falls to 70 F–given the same set of operating conditions, then:

RSCWS = 45 F + 1.0 [90 F - 70 F]
RSCWS = 45 F + 20.0 F
RSCWS = 65 F

Notice that 10 F is added to the system chilled water setpoint for every 10 F drop in outdoor air temperature when the CWR rate is 100%.

Example 2. Let's look at the amount of reset produced when 150% (i.e., 1.5) is entered for System B's CWR rate.

RSCWS = 45 F + 1.5 [90 F - 70 F]
RSCWS = 45 F + 30.0 F
RSCWS = 75 F

Example 3. Finally, suppose that a value less than 100% (e.g., 80% or 0.8) is entered for the CWR rate:

RSCWS = 45 F + 0.8 [90 F - 70 F]
RSCWS = 45 F + 16.0 F
RSCWS = 61 F

Compare the RSCWS values obtained in Examples 1, 2 and 3; notice that the degree of reset is directly proportional to the difference between the actual and –in this case–design ambient temperatures.

* * * * *

"Reverse" CWR. When the No. 4 configuration DIP switch is positioned at ON, the SCP uses the following equation to calculate a reset system chilled water setpoint:

RSCWS = SCWS + RATE [AUXTMP - CWR SET]

Notice the difference between this equation and the one used for "normal" ambient CWR. Using this "reverse" equation, the SCP will reset the system chilled water setpoint upward as the outdoor ambient temperature rises (i.e., rather than falls, as in the "normal" mode).

See Examples 3 and 4 below–along with Figure 21–for an interpretation of the SCP's "reverse", ambient-based CWR control function.

Example 3. At full load, "System C" is designed to produce 45 F chilled water when the outdoor ambient temperature is 90 F. The SCP's outdoor air sensor presently indicates an actual ambient temperature of 100 F.

Here is a summary of System C's CWR input values:
SCWS = 45 F,
STMP = 45 F,
AUXTMP = 100 F,
CWR SET = 90 F,
RATE = 100% (i.e., 1.0), and,
DIP Switch No. 4 = ON/"reverse".

To determine how many degrees of reset will be added to the system chilled water setpoint when a CWR rate of 100% is selected:

RSCWS = 45 F - 1.0 [90 F - 100 F]
RSCWS = 45 F - 1.0 [-10 F]
RSCWS = 55 F

If the CWR rate is changed to 150% (i.e., 1.5), given the same operating conditions, then:

RSCWS = 45 F - 1.5 [90 F - 100 F]
RSCWS = 45 F - 1.5 [-10 F]
RSCWS = 60 F

Or, if a value of 50% is entered for the CWR rate, then:

RSCWS = 45 F - 0.5 [90 F - 100 F]
RSCWS = 45 F - 0.5 [-10 F]
RSCWS = 50 F

A comparison of these RSCWS values and corresponding CWR rate settings reveals that the amount of reset added to the system chilled water setpoint is directly proportional to the difference between the actual ambient temperature and the CWR setpoint.

Figure 20
"Normal" Ambient-Based Chilled Water Reset

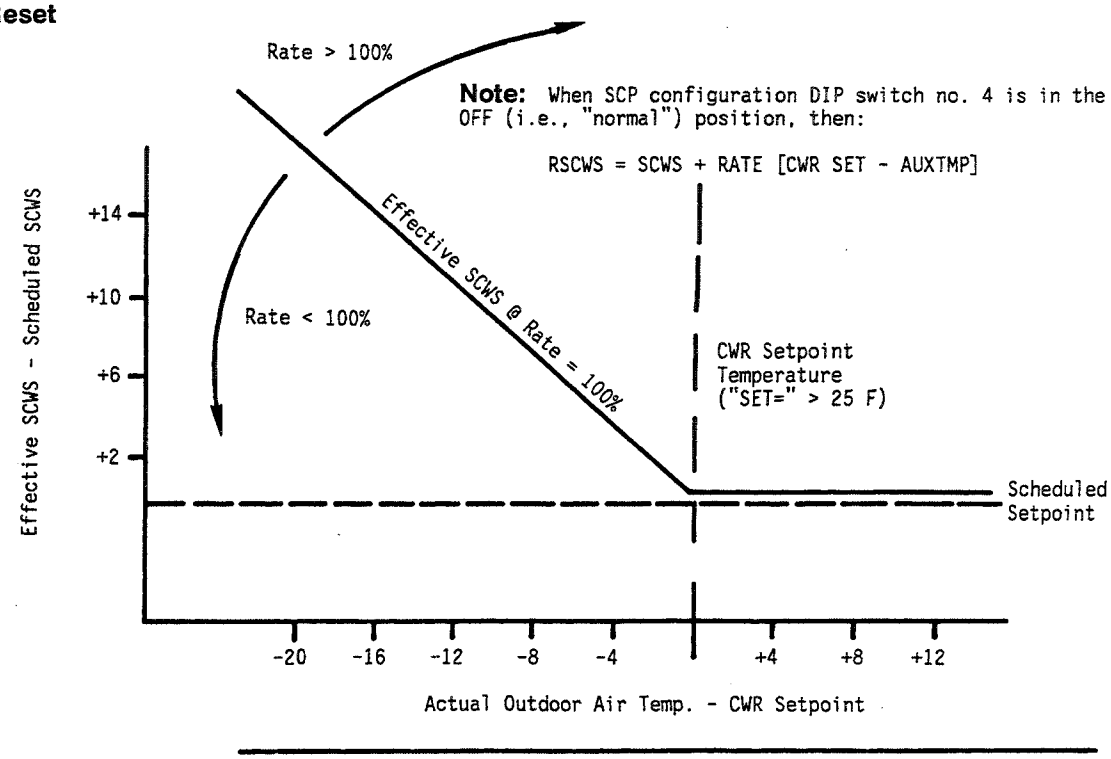

Figure 21
"Reverse" Ambient-Based Chilled Water Reset

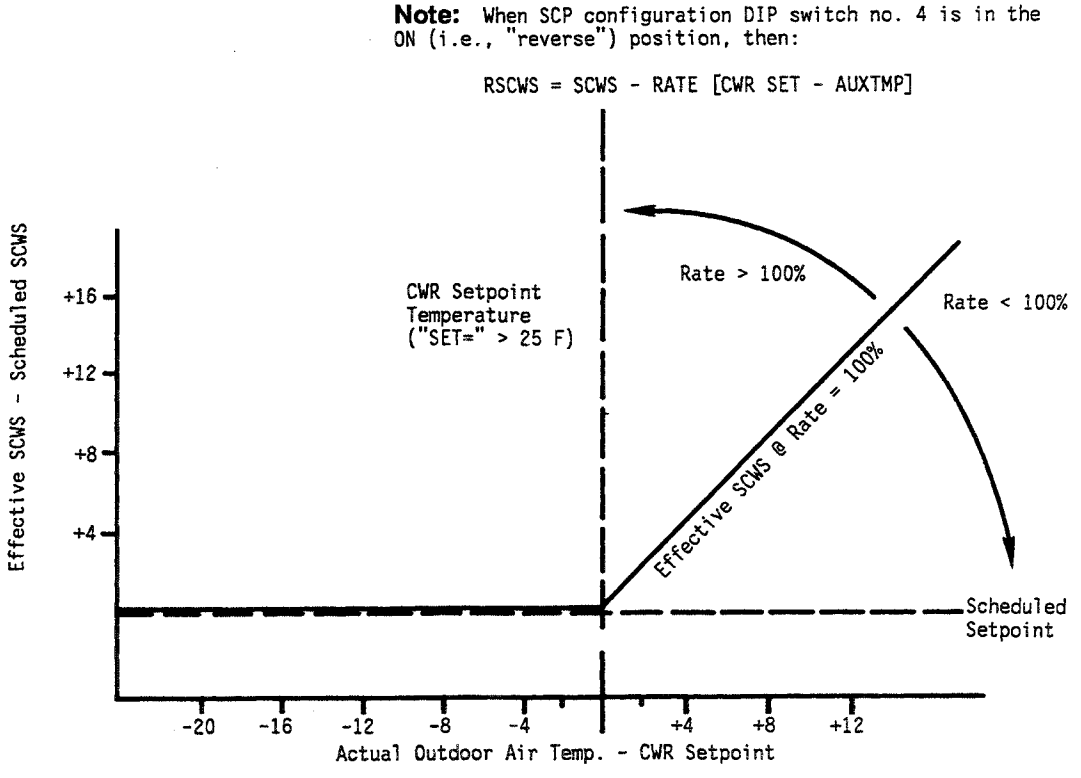

Example 4. Let's look at what happens if the actual outdoor ambient temperature falls below the CWR setpoint when "reverse" ambient CWR is in effect.

RSCWS = 45 F - 1.0 [90 F - 80 F]
RSCWS = 45 F - 1.0 [+10 F]
RSCWS = 35 F, but 35 F is not ≥ 45 F,
so,
RSCWS = 45 F

Notice that the calculated reset system chilled water setpoint will be lower than the scheduled system chilled water setpoint whenever the actual outdoor ambient temperature falls below the CWR setpoint. However, SCP control logic prevents it from using any value less than the SCWS as the effective chilled water setpoint.

Free Cooling

Based on the principle that refrigerant migrates to the coldest area(s) in the system, free cooling adapts chillers equipped with that option to function as simple heat exchangers. (An explanation of free cooling at the chiller level is included in the operation/maintenance manual that shipped with the unit.)

The SCP's free cooling (FC) control function enables the operator to select either manual or automatic (i.e., thermostatically-controlled, or on/off input) free cooling on a system-wide basis if at least 1 chiller connected to the SCP is an FC unit. (It is not possible to govern the free cooling operation of individual chillers from the SCP.)

Note: Automatic, thermostatically-controlled free cooling is an SCP control option that requires field installation of a sensor (i.e., part no. 4533-1710-41B) in either the common entering-condenser water line, or the outdoor ambient. See Figure 22.

Bidirectional communications between the SCP and connected chillers enables the SCP to identify which units (i.e., Unit 1, Unit 2 and/or Unit 3) are equipped with the FC option and can be operated in that mode.

Notice that it is possible to govern system free cooling from any of 3 control levels; these levels–in order of priority–are:

1. the SCP's front panel push buttons;

2. a Trane BAS communicating with the SCP over a bidirectional communication link; and,

3. a contact closure input–in the SCP–produced by a generic BAS or external analog controller.

Note: To automatically initiate free cooling from a generic BAS, an external analog controller, or other similar supervisory control device:

a. "SET = AUTO" must be entered for the FC system setpoint (Figure 24); and,

b. the SCP must "see" closure of both the "Scheduled System Enable/Disable" and "FC Enable/Disable" contacts. See Figure 23.

Thermostatically-controlled free cooling is not available via the "FC Enable/Disable" contacts!

Caution: Use generic BAS to turn off all non-FC chillers when system is running in free cooling mode. Running powered cooling units while very low condenser water temperatures exist is detrimental to operating efficiency and equipment life.

To better understand this control hierarchy, refer to Table 12.

Figure 22
Field Installation of Free Cooling Sensor (Thermostatically-Controlled Automatic FC Option)

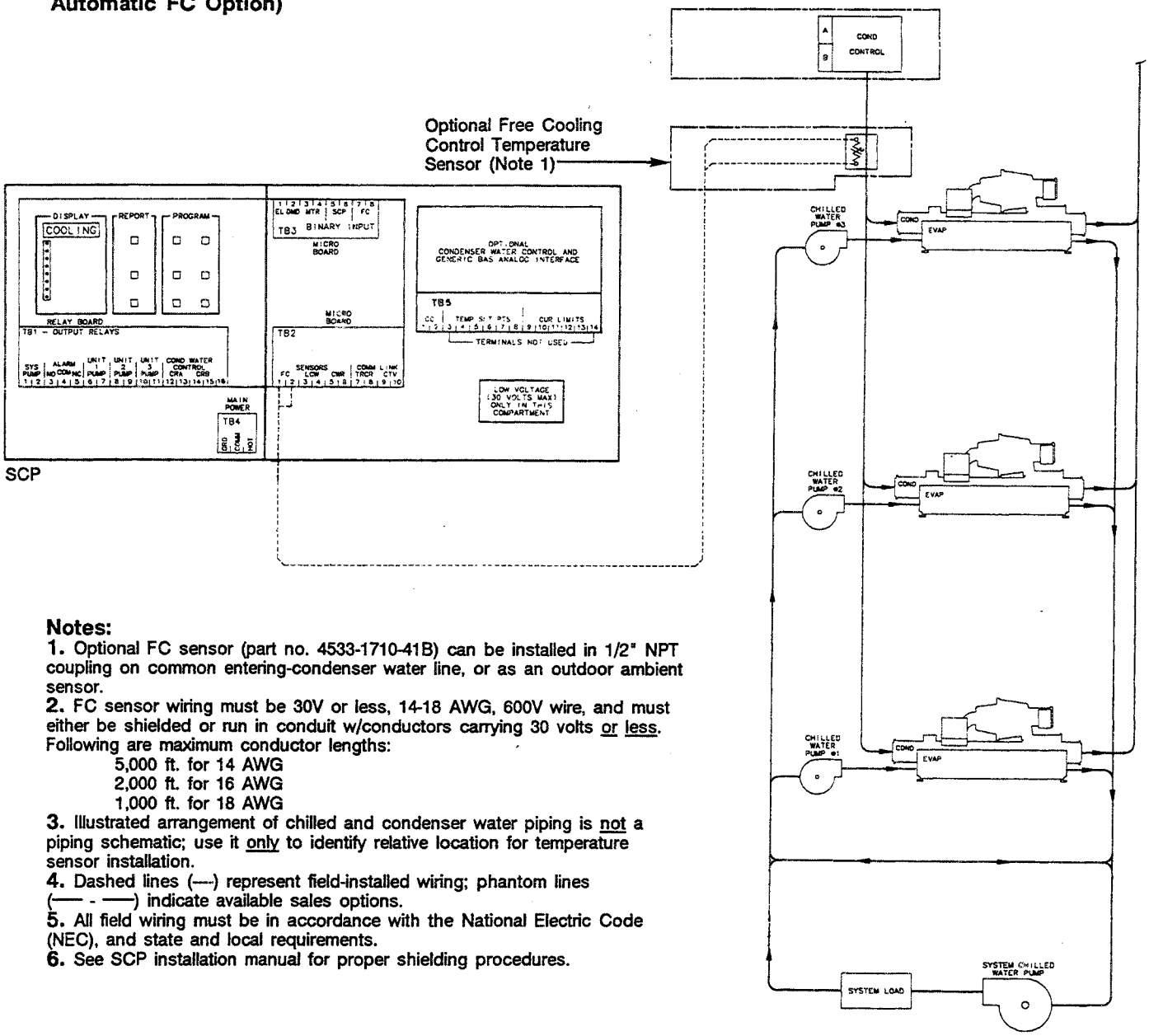

Notes:

1. Optional FC sensor (part no. 4533-1710-41B) can be installed in 1/2" NPT coupling on common entering-condenser water line, or as an outdoor ambient sensor.
2. FC sensor wiring must be 30V or less, 14-18 AWG, 600V wire, and must either be shielded or run in conduit w/conductors carrying 30 volts or less. Following are maximum conductor lengths:
   - 5,000 ft. for 14 AWG
   - 2,000 ft. for 16 AWG
   - 1,000 ft. for 18 AWG
3. Illustrated arrangement of chilled and condenser water piping is not a piping schematic; use it only to identify relative location for temperature sensor installation.
4. Dashed lines (----) represent field-installed wiring; phantom lines (—— - ——) indicate available sales options.
5. All field wiring must be in accordance with the National Electric Code (NEC), and state and local requirements.
6. See SCP installation manual for proper shielding procedures.

WARNING
Disconnect electrical power supply to prevent injury or death due to electrical shock.

Caution
Use copper conductors only to prevent equipment damage.

Drwg. 4532-3789B

Figure 23
Remote Free Cooling Enable/Disable Contact Closure Inputs (Note 1)

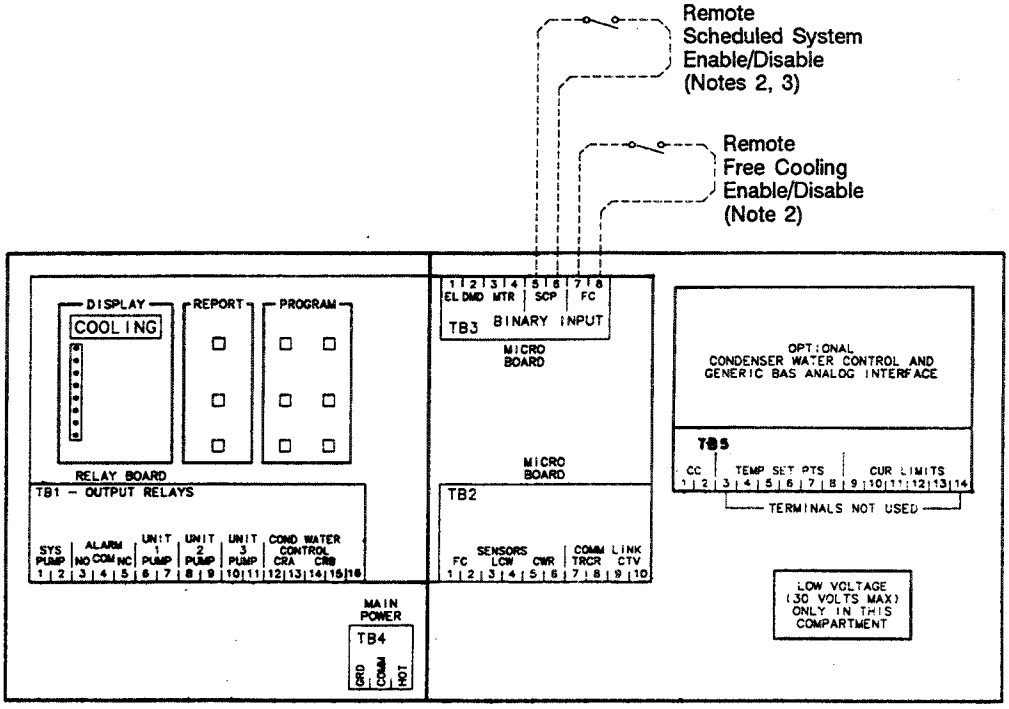

SCP

WARNING
Disconnect electrical power supply to prevent injury or death due to electrical shock.

Caution
Use copper conductors only to prevent equipment damage (unless otherwise specified).

Notes:
1. Use the "Remote Scheduled System Enable/Disable" and "Remote Free Cooling Enable/Disable" contacts if the SCP is connected to a generic BAS, external analog controller, or similar supervisory control device.
2. These control circuits are "enabled" when the contacts are closed, and disabled when the control circuits are open. Wiring is 30 volts or less; use 14-18 AWG, 600V wire. Do not route these wires in conduit with circuits exceeding 30 volts. Silver contacts (or better) are required; do not use series contacts!
3. Jumper Terminals TB3-5 and TB3-6 if the "Scheduled System Enable/Disable" contacts are not used for system control.
4. Dashed lines (—) represent field-installed wiring.

Drwg. 4532-3789B

Table 12
SCP Control Hierarchy for Free Cooling Function (6)—including Auto & Manual On/Off FC, & Thermostatically-Controlled FC

	Freecool System Setpoint (1)		Freecool System Lvg. CWS (1)		"Remote FC Enable"		System	Effective FC Setpoints	
SCP Status (See Table 7)	SCP Program	Trane BAS	SCP Program	Trane BAS	Binary Input		Operating Mode	System Setpoint	Lvg. SCWS
Off	n/a	n/a	n/a	n/a	n/a		Off	n/a	n/a
Cooling	Off	n/a	n/a	n/a	n/a	(2)	Powered Cooling	n/a	n/a
	On	n/a	n/a	n/a	n/a		Free Cooling	n/a	n/a
	Auto	Off	n/a	n/a	n/a		Powered Cooling	n/a	n/a
		On	n/a	n/a	n/a		Free Cooling	n/a	n/a
	Auto	Auto (5)	n/a	n/a	Open	(3)	Powered Cooling	n/a	n/a
			n/a	n/a	Closed		Free Cooling	n/a	n/a
	0-140 F	n/a	1-99 F	n/a	n/a		Free Cooling	0-140 F	1-99 F
	Auto	0-140 F	n/a	1-99 F	n/a	(4)	Free Cooling	0-140 F	1-99 F
		0-140 F	1-99 F	Auto	n/a		Free Cooling	0-140 F	1-99 F

n/a = A setpoint entered here will not influence SCP status or system operating mode.

Notes:
1. The freecool system setpoint and freecool system leaving chilled water setpoint (CWS) can be entered using the SCP's "SYSTEM: FREECOOL" program, or communicated by a Trane BAS.
2. Manual ON/OFF free cooling operation.
3. Automatic ON/OFF free cooling operation via the SCP's binary input (i.e., closure of the SCP's "Remote FC Enable" circuit).
4. Thermostatically-controlled, automatic free cooling operation. (This type of free cooling is only possible when the optional free cooling sensor is installed.) When in this mode, the SCP automatically "converts" system operation to the powered cooling mode when the temperature registered by the FC sensor equals or exceeds the operator-entered FC system setpoint.
5. The SCP uses "AUTO" for the Trane BAS-issued FC system setpoint if: (1) the chiller system does not include a Trane BAS; (2) the Trane BAS is not communicating any setpoints to the SCP; or, (3) the Trane BAS is sending a setpoint value of "AUTO".
6. Shaded portions of this table (i.e., excluding the column headings) represent conditions where a Trane BAS is determining SCP status and system operating mode.

Manual Free Cooling

Continuous, system-wide free cooling operation can be initiated manually via the SCP's "SYSTEM" programming menu by entering "ON" for the free cool system setpoint. (See Figure 24, and "System Setup: Freecool" in the SCP699 Operator Interface section of this manual.)

This "SET = ON" entry tells the SCP to shut down all powered CenTraVac cooling –unless a manual chiller operating command exists–and operate all FC-equipped chillers in the free cooling mode.

Free cooling operation will continue–regardless of the system leaving chilled water temperature–until the operator changes the free cool system setpoint to AUTO, OFF, or some numeric value between 0 F and 140 F. Further, as long as the system is running in the free cooling mode, none of the chillers communicating with the SCP (i.e., chiller switch(es) set at AUTO/REMOTE) can resume powered cooling operation unless a manual chiller-level operating command is issued.

Note: Manual, chiller-level operating commands that will override the SCP's freecool "ON" setting include these:

a. UCP695 control panel chiller switch is set at either AUTO/LOCAL or STANDBY/RESET;

b. a manual leaving chilled water setpoint (i.e., OFF, or 1 F through 99 F) was entered for a given unit via the SCP's "CHILLER" programming menu; or,

c. a Trane BAS has communicated a manual chilled water setpoint (i.e., OFF, or 1 F through 99 F) to a specific chiller over the bidirectional communications links between the Trane BAS, SCP and UCP695 chiller control panel.

If continuous free cooling operation is desired on an individual chiller basis, position that unit's chiller switch at AUTO/LOCAL, and set its free cooling switch at ON. Remember that the unit free cooling switch is only operational when the chiller switch is in the AUTO/LOCAL position.

Note: Entering "SET = OFF" for the SCP's free cool system setpoint prevents all system-level free cooling operation –whether manual or automatic.

Figure 24
Operator-Programmable Entries for Automatic Free Cooling Option

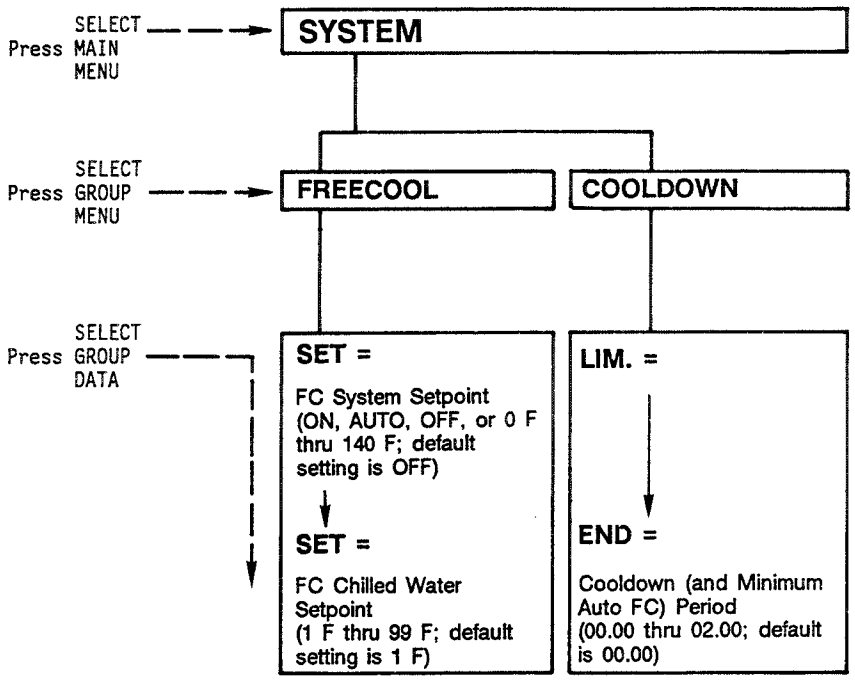

Note: "SET = AUTO" must be entered for the FC system setpoint to enable a generic BAS, external analog controller, or similar supervisory control device to provide automatic on/off control of the SCP's system free cooling function.

Automatic Free Cooling

Note: The SCP does not provide control relays to maintain condenser water pump operation during the changeover from powered cooling to free cooling. Use the relays available at the individual chiller control panels for this purpose.

Thermostatically-Controlled FC

Field installation of the optional free cooling sensor enables the SCP to thermostatically initiate system free cooling operation based on either the temperature of the common entering-condenser water or outdoor ambient.

Operating parameters for automatic, thermostatically-controlled free cooling are determined by several operator-set SCP "SYSTEM" program entries (Figure 24). The operator must specify:

[ ] a free cooling (FC) "enable" temperature setpoint; and,

[ ] a system chilled water setpoint to be maintained during the FC mode.

A minimum "on"-time for free cooling operation can also be entered when an interval longer than 15 minutes is desired.

Below is a more detailed explanation of these control settings:

[ ] Freecool System Setpoint (SET =). This control setting determines the status of the SCP's free cooling control mode; several control states are possible:

a. SET = OFF. System-level free cooling operation–whether manual or automatic–is disabled.

b. SET = ON. All units equipped with the FC option are running in the manual free cooling mode, while all other units are turned off unless a manual chiller-level operating command exists. ("Manual" FC override commands are described in a note under "Manual Free Cooling".)

c. SET = 0 thru 140 F. Entering a whole number between 0 and 140 F enables the thermostatically-controlled free cooling control function. The SCP automatically initiates this type of free cooling operation if: (1) the temperature registered by the free cooling sensor is less than the "SET = " value; (2) none of the chillers are running in the powered cooling mode (unless manually controlled); and, (3) the system is scheduled "on", or is given a manual–or BAS–command to operate in the cooling mode.

Note: Since its initiation requires that all powered cooling is "off"–and since the SCP will not automatically interrupt powered cooling operation to attempt free cooling, thermostatically-controlled free cooling typically occurs at daily start-up.

d. SET = AUTO. This prompts the SCP to look to a higher level control device (e.g., BAS) for the effective freecool system setpoint or "enabling" contact closure inputs. (See "Automatic Free Cooling: On/Off FC".)

[ ] Freecool Chilled Water Setpoint (SET =). A value entered here tells the SCP what chilled water temperature to maintain while the system is operating in the automatic, thermostatically-controlled free cooling mode. Setpoint values range from 1 F through 99 F in increments of 1 degree.

The SCP will allow the system to remain in free cooling as long as the system chilled water temperature is less than or equal to this "SET = " value. If the actual chilled water temperature exceeds the freecool chilled water setpoint, the SCP will reinstate powered cooling operation.

Note: Once thermostatically -controlled free cooling is initiated, the system will continue to operate in that mode--regardless of the actual chilled water temperature--for a minimum of either 15 minutes or the time period established for the cooldown mode, whichever is greater. Beyond that, free cooling will remain on until the actual chilled water temperature exceeds the FC chilled water setpoint.

[ ] Cooldown Period (END =). While this operating parameter is an integral part of the SCP's cooldown control function, the value entered there also determines the minimum duration of the thermostatically-controlled free cooling mode. Accessed via the SCP's "SYSTEM" programming menu (Figure 24), "END = " values range from zero (00.00) to 2 hours (02.00) in 15-minute increments.

Note: If "END = 00.00" (i.e., SCP's default setting), the minimum automatic free cooling "on"-time is 15 minutes.

Collectively, these control setting entries tell the SCP when to begin automatic, thermostatically-controlled FC operation, and how much time to allow for the FC chillers to reduce the chilled water temperature to the FC chilled water setpoint. If the system's free cooling capacity is insufficient to reach or maintain this temperature, then the SCP converts system operation to the powered cooling mode.

When system operation is no longer required (i.e., either as a result of the system operating schedule, a BAS command, or a manual setpoint), the SCP shuts down all chillers presently running under its control. (This occurs regardless of whether these units are operating in the free cooling or powered cooling mode.)

On/Off FC

Two contact closure inputs at the SCP allow a generic BAS, external analog controller, or other supervisory control device to "automatically" initiate system-level free cooling. See Figure 23.

Notice that several conditions must be met before free cooling can occur:

1. The SCP's "FC Enable/Disable" control circuit--Terminals TB3-7 and TB3-8--must be closed.

Closure of this circuit could be prompted by a field-supplied and -installed, temperature-sensitive device. Actual "FC Enable/Disable" circuit configuration will vary with system application.

2. The SCP's "Scheduled System Enable/Disable" control circuit--Terminals TB3-5 and TB3-6--must be closed.

Closure of this circuit may be the result of a command from a connected, supervisory control device. A jumper is field-installed across these terminals to close this circuit when the "Scheduled System Enable/Disable" contact closure input is not used.

3. "SET = AUTO" must be entered for the freecool system setpoint in the SCP's "SYSTEM: FREECOOL" programming menu.

When all 3 of these requirements are satisfied, the SCP initiates free cooling operation in those units that are equipped with the FC option--and are presently under its control (i.e., chiller switch set at AUTO/REMOTE). The operating status of non-FC chillers controlled by the SCP (as well as units under manual control) will not change. In other words, simultaneous powered cooling and free cooling operation can occur within the system if both FC and non-FC chillers are present.

Caution: Turn off all non-FC chillers when system is running in free cooling. Operating chillers in powered cooling mode while very low condenser water temperatures exist is detrimental to operating efficiency and equipment life.

Once free cooling has begun, system operation will remain in that mode--regardless of chilled water temperature --until either of the contact closure inputs is open, or the FC system setpoint entry is changed to some value other than AUTO.

Remember that the "FC Enable/Disable" contact closure input only provides on/off control of the system-level free cooling function. Thermostatically-controlled free cooling is not possible without reprogramming the SCP and installing the optional free cooling sensor.

Trane BAS Interface

Field installation of a twisted-pair conductor (BCL) between the SCP (i.e., at Terminals TB2-7 and TB2-8) and a Trane building automation system enables the Trane BAS to send system--or chiller --setpoint and scheduling information to the SCP. In turn, the SCP uses this data to regulate the operation of all connected chiller system equipment (e.g., chillers, pumps, etc.).

Note: SCP control logic is bypassed as long as the Trane BAS is regularly transmitting system and chiller setpoints. However, if more than 15 minutes elapses between Trane BAS communication updates, the SCP will default to its own internal control values.

Notice that the Trane BAS can issue setpoints for all of the SCP's programmable control settings; Figure 9 in SCP699 Operator Interface summarizes these entries. In addition, the BCL allows the Trane BAS to "read" all operating data monitored by the SCP--at both system and chiller levels.

(Remember that the relay settings associated with the optional condenser limit control function must still be adjusted manually on the SCP's sideboard. See "Condenser Limit Option" on page 68 of this manual.)

Electrical Demand Limiting

Note: Remember that the electrical demand limit function is inoperative unless "AUTO" is entered for the system current limit setpoint. See Figure 25 (and Figure 12 in SCP699 Operator Interface).

The SCP's electrical demand limiting function enables it to monitor the building's incoming power level and reduce chiller system current draw accordingly (i.e., at a minimum rate of 2% per minute) when an operator-selected peak demand point is exceeded.

To do this, the SCP compares a sensor input value with an operator-entered, system electrical demand limit setpoint (Figure 25). Whenever the incoming power level registered by the sensor violates the demand limit, the SCP lowers the effective system current limit setpoint (SCLS). Then, using the new SCLS value, it begins to unload chillers by sending the unit control panels current limit setpoints below their individual, reported electrical load levels.

Note: For the SCP's electrical demand limit function to operate properly, the chiller system must constitute a significant percentage of the metered building electrical load. If the chiller system draws a relatively small portion of that load, the SCP may unload all of the chillers in order to reduce electrical demand!

Once system electrical demand falls below the electrical demand limit setpoint, the SCP raises the effective SCLS value and issues new, higher unit current limit settings.

Like the SCP's normal system current limit control function, its electrical demand limit function takes precedence over system temperature control. In other words, the SCP will demand-limit system operation whenever the electrical demand limit setpoint is exceeded–even if the lower unit current limit values force the chillers out of temperature control range!

Note: The SCLS value determined with the SCP's electrical demand limit function is ignored if it is higher than an existing cooldown or Trane BAS-issued SCLS value.

Two programmable entries in the "SYSTEM" menu allow the operator to establish an electrical demand limit setting and an electrical demand meter rate. See Figure 25. The limit setting is compared against the actual system electrical demand to determine whether or not chiller unloading is required. Limit settings range from 1% through 100% of the metered building electrical load (i.e., in increments of 1%); the demand limit function is disabled when "LIM. = 0".

The meter rate entry is a program constant that ranges from 0 through 100 (i.e., in increments of 1), and is used to translate meter pulse input data into a percent of electrical load. It is calculated and entered only once, and numerically converts the frequency of the demand meter contact closure input to a percentage of full-scale output.

See Figure 26. Notice that 4 input connections–SCP Terminals TB3-1 through TB3-4–are associated with the electrical demand limit function. These terminals are field-connected to a 2- or 3-wire contact closure output from some metering device–usually the pulse output of a watt-hour meter.

The SCP is capable of counting pulse rates ranging from 1 pulse/100 seconds to 10 pulses/1 second. However, each contact closure and opening must be maintained for approximately 20 milliseconds for the pulse to be detected.

Watt-Hour Meter/ Pulse Initiator Selection

The electrical utility will select and install a suitable watt-hour meter for your chiller system application. If the utility does not "size" the pulse-output device (or "initiator") as well, it will be necessary to calculate a "revolutions -per-pulse" (R/P) value that can then be used to select an appropriate pulse initiator.

A numeric value for the R/P ratio is derived from this equation:

$$\frac{R}{P} = \frac{1000 \times Ke}{PKh},$$

where,
Ke = kilowatt-hours per pulse; and,
PKh = watt-hours per revolution.

In order to solve for "R/P", several preliminary calculations are required:

1. Solve the following equation to arrive at a numeric value for "PKh":

$$PKh = Kh \times CTR \times VTR,$$

where,
Kh = meter constant displayed on the demand meter;
CTR = current transformer ratio; and,
VTR = voltage transformer ratio.

Figure 25
Operator-Programmable Entries for Electrical Demand Limiting

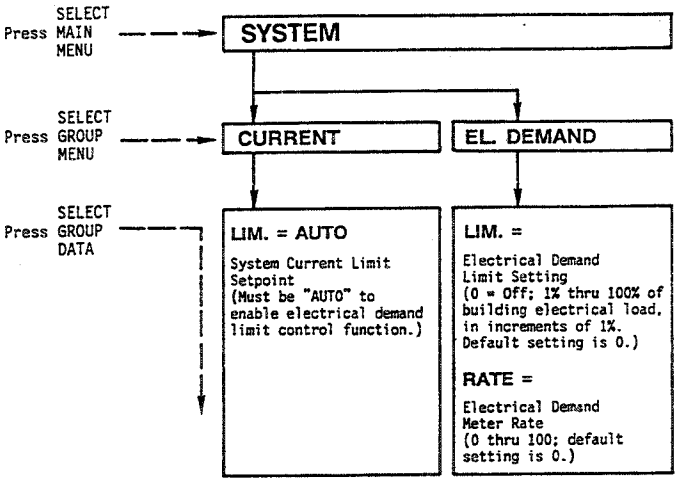

2. Using a pulse rate of 3 pulses per second at maximum power input, calculate a "kilowatt-hours per pulse" (Ke) value with this equation:

$$Ke = \frac{\text{Max. System Kw}}{\text{Pulses per Hour}},$$

where "pulses per hour" is 10,800 (i.e., 3 pulses/sec. x 60 sec./min. x 60 min./hr.).

Note: Using a frequency (or pulse rate) of "3" not only minimizes the effect of rounding off when calculating the SCP's meter rate setting, but also allows more flexibility when selecting meter/pulse gearing. (An "acceptable" frequency input for a 2-wire output at full power draw can be as much as 10 contact closures per second.)

3. Substitute the numeric values calculated for PKh (Step 1) and Ke (Step 2) into the following equation to arrive at an "R/P" ratio for your system.

$$\frac{R}{P} = \frac{1000 \times Ke}{PKh},$$

4. Select a pulse-output device with an "R/P" ratio that most closely matches the R/P ratio calculated in Step 3.

Figure 26
Field Connections for Electrical Demand Meter Wiring

Notes:
1. Dashed lines (—) indicate field wiring by others.
2. All field wiring must be in accordance with NEC, state and local requirements.
3. Electrical demand limiting is a standard SCP feature, but it is implemented and field-wired as required for a specific system application.
4. 30 volts or less. Use 14-18 AWG, 600V wire. Do not run in conduit with circuits exceeding 30V. Silver contacts (or better) required; no series contacts!

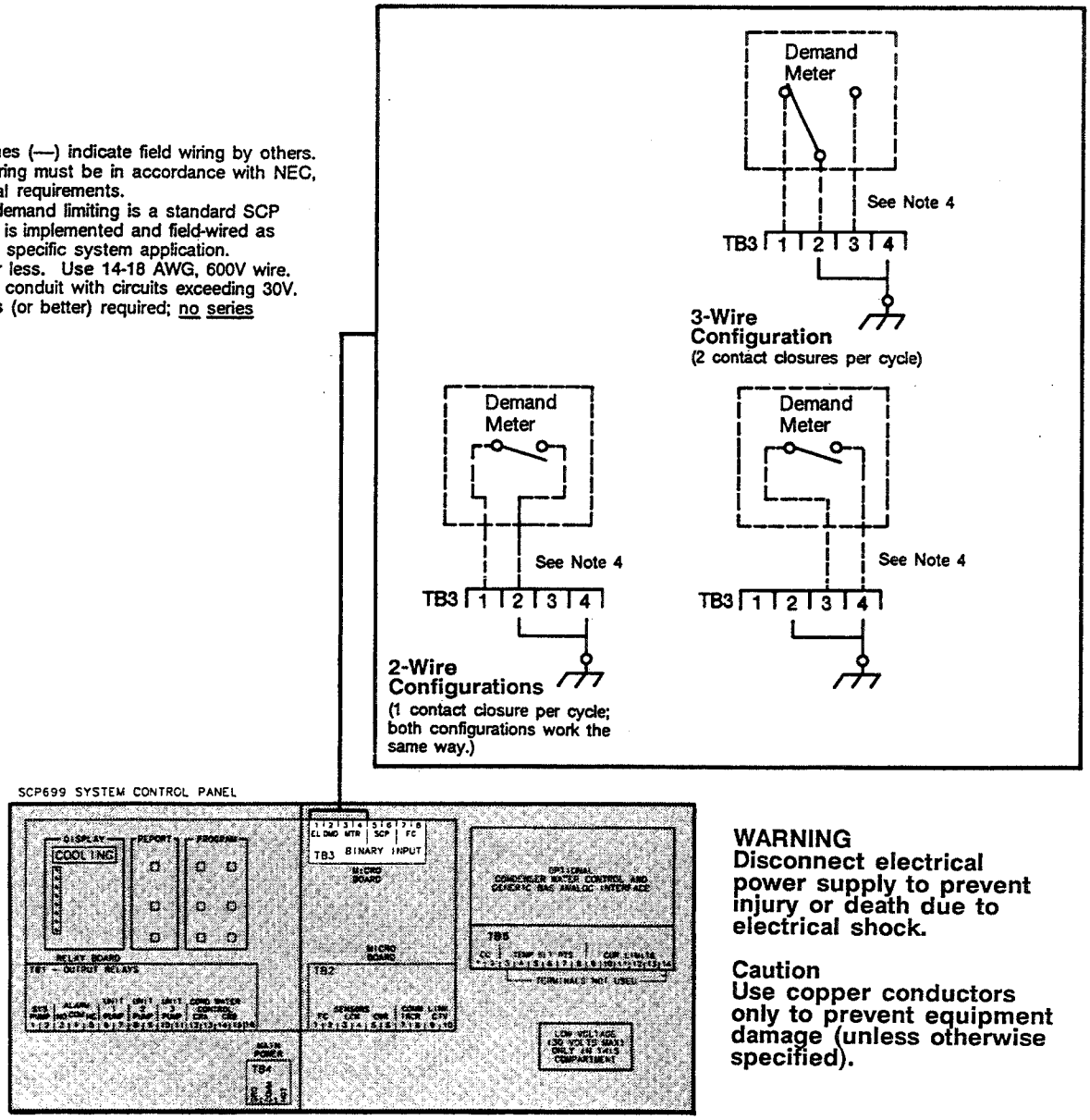

WARNING
Disconnect electrical power supply to prevent injury or death due to electrical shock.

Caution
Use copper conductors only to prevent equipment damage (unless otherwise specified).

Drwg. 4532-3789B

Determining Electrical Demand Limit Settings

Once the watt-hour meter and pulse initiator are selected, several additional computations must be made to arrive at appropriate electrical demand limit setpoint and meter rate values for your system application. These calculations are described below.

1. Calculate the kilowatt-hours per pulse (Ke) based on the actual watt-hours/revolution (PKh) and revolutions/pulse (R/P) values of the watt-hour meter installed. Use this equation:

$$Ke = \frac{R}{P} \times \frac{PKh}{1000}$$

(Remember that PKh = Kh x CTR x VTR; see Step 1 of "Watt-Hour Meter/Pulse Initiator Selection".)

2. Determine what kilowatt value will correspond to a 100% electrical demand load.

Note: Select a Kw value that is (1) close to–but greater than–the demand limits that will be set, and (2) a multiple of 10 (e.g., 1000, 5000, etc.) so that any operator-entered demand limit setpoint can be easily converted to a Kw value.

(For example, if a system's electrical demand meter peak is 850 Kw, you may wish to set the 100% load value equal to 1000 Kw. In this instance, the equivalent kilowatt value for a demand limit setpoint of 54% would then be 540 Kw.)

3. Use the following equation to calculate the appropriate value for the SCP's electrical demand limit meter rate setting. Be sure to round off the calculated "RATE = " value to the nearest integer between 0 and 100.

$$RATE = \frac{0.0025 \times Kw(@100\%)}{Ke},$$

where,
Kw (@100%) = kilowatt value equivalent to a 100% electrical demand load (see Step 2); and,
Ke = kilowatt-hours/pulse (see Step 1).

4. Calculate the actual kilowatt value that corresponds to a 100% electrical demand load using the "rounded-off" rate value determined in Step 3. (Because the meter rate was rounded to the nearest integer, the kilowatt value calculated here will not match the value found in Step 2.)

$$Kw(@100\%) = \frac{RATE \times Ke}{0.0025},$$

where,
RATE = integer RATE value calculated in Step 3; and,
Ke = kilowatt-hours/pulse (see Step 1).

5. Using the kilowatt value found in Step 4, determine the peak building load (in kilowatts), and calculate the appropriate electrical demand limit setpoint with this equation:

$$\text{El. Demand Limit} = \frac{\text{Peak Kw} \times 100}{Kw(@100\%)},$$

where,
Peak Kw = desired limit–in kilowatts–for the maximum building load; and,
Kw (@100%) = 100% demand load in kilowatts (see Step 4).

Again, be sure to round off the calculated limit value to the nearest integer.

For example, if the kilowatt value corresponding to a 100% demand load is 1012 kw–and the desired electrical demand limit is 550 kw, then:

$$\text{El. Demand Limit Setpoint} = \frac{550 \text{ Kw} \times 100}{1012 \text{ Kw}}$$

$$\text{El. Demand Limit Setpoint} = 54.35 \text{ or } 54$$

Note: Repeat Step 5 to determine the electrical demand limit setpoint for other peak load conditions, but do not change the value used for RATE.

Once calculated, enter the electrical demand limit setpoint and meter rate values in the SCP's "SYSTEM" program menu. (See "System Setup: Electrical Demand Limit" in the SCP699 Operator Interface section of this manual.)

* * * * *

Review the example below to ensure that you understand the calculations used first to size a pulse initiator, and then to determine appropriate SCP electrical demand limit settings.

"Suppose a building operator installs a 2-wire electrical demand meter on the 480-volt, 3-phase incoming power lines of a building. The metered circuit includes a 1000:5 current transformer, and a voltage (potential) transformer with a ratio equal to 1. The desired peak building load is 750 Kw.

"Both the meter and transformers are designed for a maximum input of 1,000 Kw, and the meter constant is 2.4."

Calculate the values needed to establish appropriate electrical demand limit setpoint and meter rate values.

a. Determine the value of PKh (i.e., watt-hours per revolution).

$$PKh = 2.4 \times \frac{1000}{5} \times 1 = 480$$

b. Calculate a value for Ke (i.e., kilowatt-hours per pulse); remember to base this calculation on a frequency of 3 pulses per second.

$$Ke = \frac{1{,}000}{10{,}800} = 0.093 \text{ or } 0.09$$

c. Determine the proper R/P value for this application.

$$\frac{R}{P} = \frac{1000 \times 0.09}{480} = \frac{90}{480} \text{ or } \frac{1}{5.3}$$

d. Since the "R/P" ratio found in Step c is 1/5.3, select a pulse initiator that will produce 1 revolution per 6 pulses (i.e., R/P = 1/6).

e. Using the PKh and R/P values determined in Steps a and d, compute an "actual" value for Ke.

$$Ke = \frac{1}{6} \times \frac{480}{1000} = 0.08$$

f. Remember that the desired peak building load is 750 Kw; therefore, let's use a value of 1000 Kw as the "100% electrical demand load".

g. Solve for RATE; be sure to round off the calculated RATE value to the nearest integer.

$$RATE = \frac{0.0025 \times 1000}{0.08} = 31.25 \text{ or } 31$$

h. Use the integer value for RATE (calculated in Step g) to determine the actual Kw value that corresponds to a 100% electrical demand load.

$$Kw(@100\%) = \frac{31 \times 0.08}{0.0025} = 992$$

i. Calculate the appropriate electrical demand limit setpoint; in this example, use the desired peak building load of 750 Kw.

$$\text{El. Demand Limit} = \frac{750 \times 100}{992} = 75.6 \text{ or } 76$$

j. Access the SCP's "SYSTEM" programming menu, and enter "LIM. = 76" and "RATE = 31".

Evaporator Water Pump Control

Note: SCP control of evaporator water pump(s) is not possible in generic BAS applications.

Besides operating the connected centrifugal water chillers, the SCP also provides coordinated control of as many as 3 individual chiller evaporator pumps and 1 system pump.

Four normally-open relays on the SCP's output relay board are designated for evaporator pump control, and can be wired into the pump starter interlock control circuits. Specific pump relay terminal connections at the SCP are listed below (and illustrated in Figure 27):

[ ] system pump starter connected to SCP Terminals TB1-1 and -2;

[ ] Unit 1's pump starter connected to SCP Terminals TB1-6 and -7;

[ ] Unit 2's pump starter connected to SCP Terminals TB1-8 and -9; and,

[ ] Unit 3's pump starter connected to SCP Terminals TB1-10 and -11.

Note: Remember that each of the "Unit 1", "Unit 2" and "Unit 3" designators corresponds to the address set up with DIP Switch Block S11 in each chiller control panel. (See "UCP695 DIP Switch Setup" in the Start-Up section of this manual.)

Together, (1) SCP operating status, (2) unit chilled water setpoint(s), and (3) the position of SCP configuration DIP Switch No. 1 determine whether any--or all--of the chilled water pumps are running at a given time. (Recall that DIP Switch No. 1 must be in the OFF--or "normal"--position to assure proper SCP control of pump operation.)

Table 13 summarizes the relationship between these factors and the status (i.e., open or closed) of the SCP's chilled water pump control relays.

Notice that as long as any unit connected to the SCP is running, the SCP will not de-energize the system or chiller pump until the unit is shut down. This is true regardless of whether the unit is actually "scheduled" off (but running under a manual command), or operating in the "Auto/Local" mode--provided that the BCL between the SCP and chiller remains intact.

Table 13
Operation of SCP Evaporator Control Output Relays (1)

SCP Operating Status	Unit(s) Chilled Water Setpoint Status	Pump Relay Status	
		System Pump	Chiller Pump(s)
Off	Manual On	On	On
Off	Manual Off	Off	Off
Off	Auto	Off	Off
On	Off	On	Off
On	Free Cooling	On	On
On	On	On	On

Notes:
1. All SCP evaporator pump output relays are subject to minimum "on" (i.e., 5 ± 1 minutes) and "off" (i.e., 0 minutes) times unless configuration DIP Switch No. 1 is in the ON--or "service" position.
2. Whether DIP Switch No. 1 is set at OFF or ON, the system pump relay will energize whenever:
   a. a chiller evaporator pump relay energizes; or,
   b. the system is turned ON.
3. Whenever the SCP's operating status is "ON", it starts the chiller evaporator pump associated with the first chiller in rotation.

Figure 27
SCP/Evaporator Water Pump
Field Wiring Connections

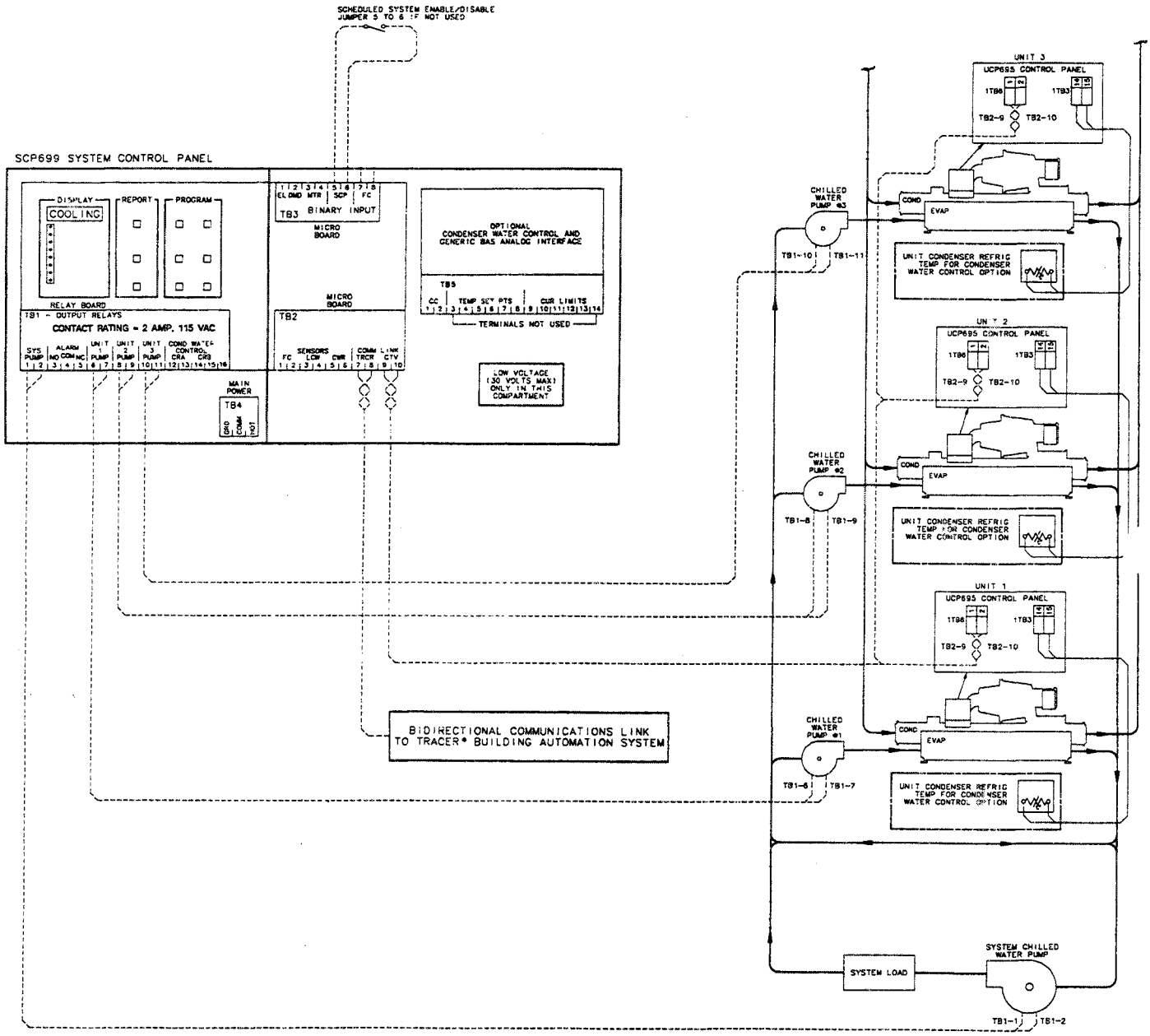

Notes:

1. Dashed lines (—) represent field-installed wiring; phantom lines (—— - ——) indicate available sales options.
2. All field wiring must be in accordance with the National Electric Code (NEC), and state and local requirements.
3. Control circuit wiring between the SCP relay board and evaporator pump starters is 14 AWG, 600V wire rated for 105 C. A separate 120 VAC power supply is required.
4. While SCP evaporator pump control is a standard feature, its actual implementation is optional. Field wiring is dictated by the specific system application.
5. Illustrated arrangement of chilled and condenser water piping is not a piping schematic; use it only to identify temperature sensor locations.

WARNING
Disconnect all electrical power supplies to prevent injury or death due to electrical shock.

Caution
Use copper conductors only to prevent equipment damage.

Drwg. 4532-3789B

System Pump

The normally-open contacts of the **system pump** control relay close whenever the SCP is enabled and the system is scheduled--or manually commanded--to maintain a chilled water setpoint. Once closed, an internal timer function ensures that the contacts do not reopen for at least 5 minutes; during this period, the SCP can verify the existence of a cooling requirement.

Note: Remember that the SCP is "enabled" whenever its "Scheduled System Enable/Disable" circuit (i.e., TB3-5 to TB3-6) is closed.

System pump operation will continue until the system is scheduled off, or the SCP is disabled.

In the event of a power loss or an SCP malfunction, the system pump output relay is de-energized, shutting down system pump operation.

Chiller Pumps

Like the system pump, each chiller evaporator pump is governed by its own normally-open set of SCP output relay contacts. Any valid numerical setpoint for a particular unit--whether issued by the SCP, communicated from a Trane BAS, or manually entered at the SCP by the operator--will cause the associated chiller pump (along with the system pump) relay to energize.

Notice that SCP control logic anticipates chiller operation by energizing the chiller pump relay associated with the first unit in the start rotation whenever the system is scheduled "on". (See Table 13.) This assures that the unit pump is running before that chiller is expected to operate in either the powered cooling or free cooling mode. Further, once the pump relay contacts "make", they will remain closed for a minimum of 5 minutes.

When a unit is issued an "off" value for its chilled water setpoint, its evaporator pump control relay is de-energized once post-lube is complete--but only if the SCP does not anticipate restarting that chiller in the immediate future.

All chiller evaporator pump operation is shut down if a power loss or SCP malfunction occurs.

Condenser Water Pump Control

SCP699 system control panels do not include control output relays for each chiller's condenser water pump. Instead, condenser pump control is handled at the chiller level by the UCP695 control panel. Integration of condenser pump control with unit operation is explained in the installation and operation/maintenance manuals that ship with each CenTraVac chiller.

Generic BAS Option

Note: It is important to remember that when the SCP is used in a generic BAS application, its role is reduced to one of relaying setpoint changes from the generic BAS to the chillers. All system control functions--such as scheduling and chilled water pump control--must be performed by the generic BAS.

As a result, operator setup at the SCP is limited to ensuring that DIP Switch No. 2 (i.e., located on the sideboard; see Figures 28 and 29) is set at the ON position to enable SCP interface with the generic BAS.

Required SCP program entries are limited to the following:

[ ] In the "FREECOOL" portion of the "SYSTEM" program, enter "AUTO" for the free cooling system setpoint.

[ ] In the Unit 1, Unit 2 and Unit 3 portions of the SCP's "CHILLER" program, enter:

a. "AUTO" for each unit's leaving chilled water setpoint;

b. "AUTO" for each unit's current limit setpoint; and,

c. the percentage of total chiller current draw--"LOAD = "--of each unit. (This entry is an important part of the SCP's reports.)

In addition to these entries, you may also wish to set up the SCP's clock/calendar. (See "Program Interface" in the SCP699 Operator Interface section of this manual for instructions.)

Note: In generic BAS system applications, the SCP will only record and alarm system-level diagnostic conditions; it will not alarm diagnostic conditions that occur at the chillers.

Factory-installation of a sideboard within the SCP panel enclosure provides the means for a non-Trane BAS to directly control chiller operation by varying unit chilled water and current limit setpoints.

Analog control signals issued by the generic BAS for each unit's chilled water setpoint and current limit setting are sent to the SCP over twisted-pair conductors field-connected to Terminals TB5-3 through TB5-14 on the sideboard. Specific terminal connections are listed below and shown in Figure 28:

[ ] Chilled Water Temperature Setpoints:
Unit 1 = Terminals TB5- 3, - 4
Unit 2 = Terminals TB5- 5, - 6
Unit 3 = Terminals TB5- 7, - 8

[ ] Current Limit Settings:
Unit 1 = Terminals TB5- 9, -10
Unit 2 = Terminals TB5-11, -12
Unit 3 = Terminals TB5-13, -14

The SCP's generic BAS input terminals are designed to receive control signals of 0 to +10 VDC; SCP load is 96.4 kilo-ohms. Alternatively, 4 to 20 maDC signals may be substituted if the six 499-ohm resistors (i.e., R23 thru R28; supplied with the SCP) are field-installed on the sideboard for each pair of analog input terminals. In this instance, each 4 to 20 maDC current signal is driven into the appropriate 499-ohm load. See Figure 29.

To automatically control chiller operation, the "System Enable/Disable" circuit between SCP Terminals TB3-5 and TB3-6 must be closed. Closure of this input circuit allows the SCP to enable powered cooling operation of all connected chillers (i.e., with chiller switches set at AUTO/REMOTE).

For system applications that require individual on/off chiller control, field-wire a contact closure into the chilled water flow interlock circuit of each unit. (Typically, this set of contacts would be positioned in series with the starter auxiliary and chilled water flow switch.) If individual pumps are allocated for each chiller, the generic BAS can enable operation of a specific chiller simply by starting the appropriate chilled water pump.

Note: If the chiller switch of a particular unit is moved to AUTO/LOCAL, setpoints established at the UCP695 chiller control panel override any setpoints communicated by the SCP.

Figure 28
SCP Field Wiring Connections for Generic BAS Applications

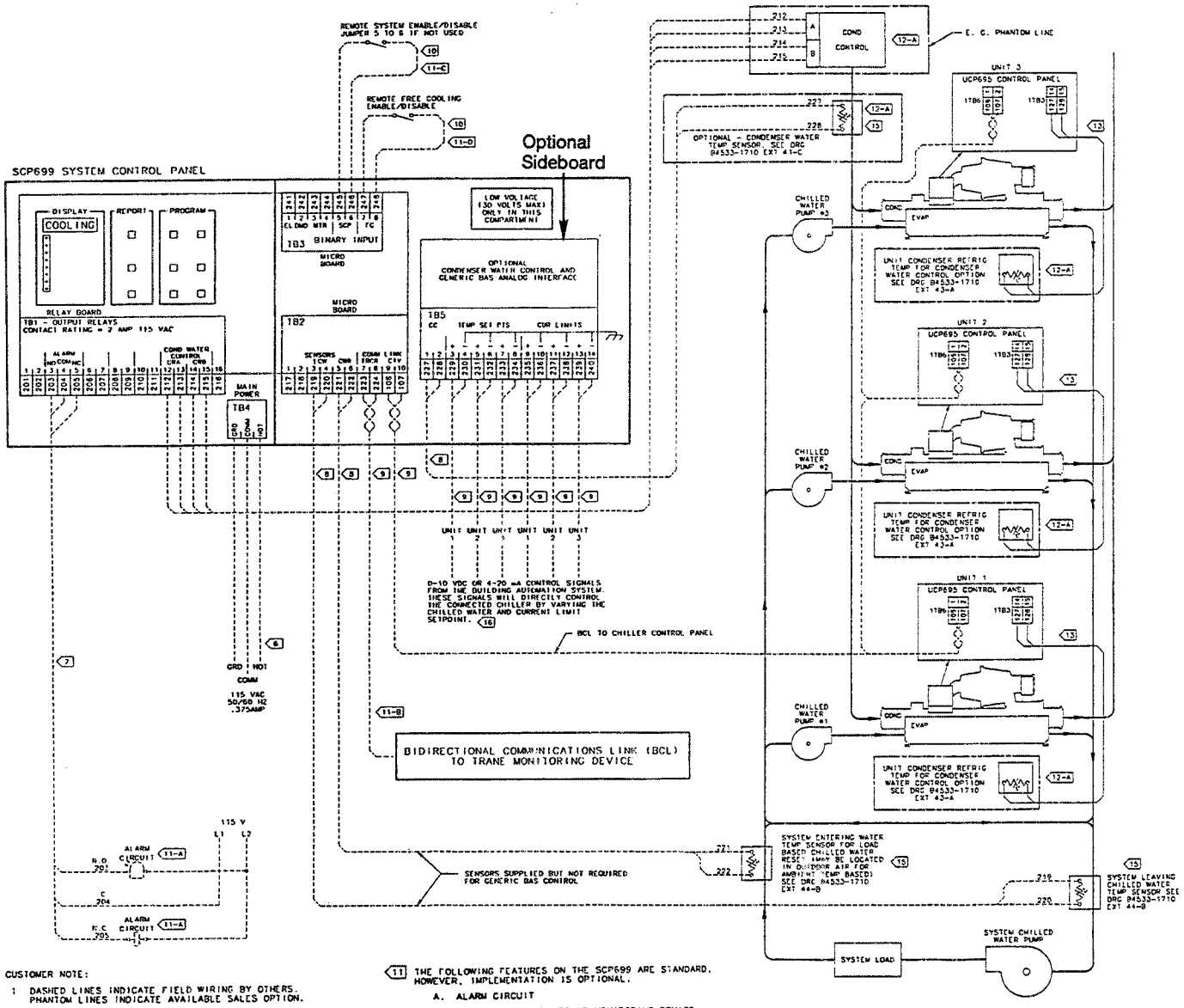

CUSTOMER NOTE:

1. DASHED LINES INDICATE FIELD WIRING BY OTHERS. PHANTOM LINES INDICATE AVAILABLE SALES OPTION.
2. ALL FIELD WIRING MUST BE IN ACCORDANCE WITH THE NATIONAL ELECTRIC CODE (NEC), STATE AND LOCAL REQUIREMENTS. OTHER COUNTRIES APPLICABLE NATIONAL AND OR LOCAL REQUIREMENTS SHALL APPLY.
3. ALL CHILLED WATER PUMPS ARE CONTROLLED BY THE BAS. CONDENSER WATER PUMPS CAN BE ENABLED BY THE CONTROL CONTACT PROVIDED IN THE CENTRAVAC CHILLER UNIT CONTROL PANEL (UCP695).
4. PROVISION SHOULD BE MADE TO TURN THE CONTROLLED CHILLERS ON AND OFF VIA THE CHILLED WATER FLOW INTERLOCK ON THE UCP695.
5. CHILLED WATER AND CONDENSER PIPING ARRANGEMENT IS NOT INTENDED AS A PIPING SCHEMATIC. IT IS USED TO ILLUSTRATE TEMPERATURE SENSOR LOCATIONS.

6. #14-16 AWG, 105°C, 600 VOLT WIRE.
7. #14 AWG, 105°C, 600V WIRE, SEPARATE 120 VAC POWER SUPPLY IS REQUIRED.
8. 30V OR LESS, #14-18 AWG 600V WIRE. MUST BE SHIELDED OR RUN IN CONDUIT. DO NOT RUN IN CONDUIT W/CIRCUITS GREATER THEN 30V. SEE TABLE 1 FOR MAX LENGTH.
9. SHIELDED TWISTED PAIR, #14-18 AWG 600V WIRE. MAX LENGTH 5000 FT. DO NOT RUN IN CONDUIT W/CIRCUITS GREATER THAN 30V.
10. #14-18 AWG 600V WIRE. DO NOT RUN IN CONDUIT W/CIRCUITS GREATER THAN 30V. SILVER CONTACTS OR BETTER REQUIRED (NO SERIES CONTACTS).

11. THE FOLLOWING FEATURES ON THE SCP699 ARE STANDARD, HOWEVER, IMPLEMENTATION IS OPTIONAL.
    - A. ALARM CIRCUIT
    - B. COMMUNICATION TO TRANE MONITORING DEVICE
    - C. REMOTE SYSTEM ENABLE/DISABLE
    - D. REMOTE FREE COOLING ENABLE/DISABLE
12. THE FOLLOWING CAPABILITIES ARE OPTIONAL - THEY ARE IMPLEMENTED AND WIRED AS REQUIRED FOR A SPECIFIC SYSTEM APPLICATION.
    - A. CONDENSER LIMIT CONTROL
13. WIRING INCLUDED WITH SENSOR. FIELD CONNECTION REQUIRED.
14. SEE SCP699 INSTALLATION MANUAL (CVMA-IN-1) FOR PROPER SHIELDING CONNECTIONS.
15. 1/2 NPT COUPLINGS REQUIRED FOR WATER TEMPERATURE SENSOR WELLS.
16. NEGATIVE SIGNAL INPUTS ARE GROUNDED TO SCP ENCLOSURE. FOR CORRECT OPERATION, EXTERNAL EQUIPMENT SIGNALS SHALL BE ISOLATED OR FLOATING WITH RESPECT TO SCP ELECTRICAL SERVICE GROUND AND ISOLATED FROM EACH OTHER. SPECIAL CONSIDERATION MUST BE GIVEN TO 4-20 mA SIGNALS. IF THE CURRENT SOURCE REGULATES CURRENT FLOW ON THE NEGATIVE LEAD, USE A SEPERATE POWER SUPPLY FOR EACH CHANNEL. IN SOME APPLICATIONS, IT MAY BE NECESSARY TO INSTALL A LOOP ISOLATOR IN EACH CHANNEL TO PREVENT LOOP INTERFERENCE.

TABLE 1

WIRE SIZE	MAX LENGTH FOR SENSOR LEADS
14 AWG	5000 FT
16 AWG	2000 FT
18 AWG	1000 FT

WARNING
Disconnect electrical power supply to prevent injury or death due to electrical shock.

Caution
Use copper conductors only to prevent equipment damage (unless otherwise specified).

Drwg. 4533-1707B

Figure 29
Optional SCP Sideboard for Condenser Water Control and Generic BAS Interface

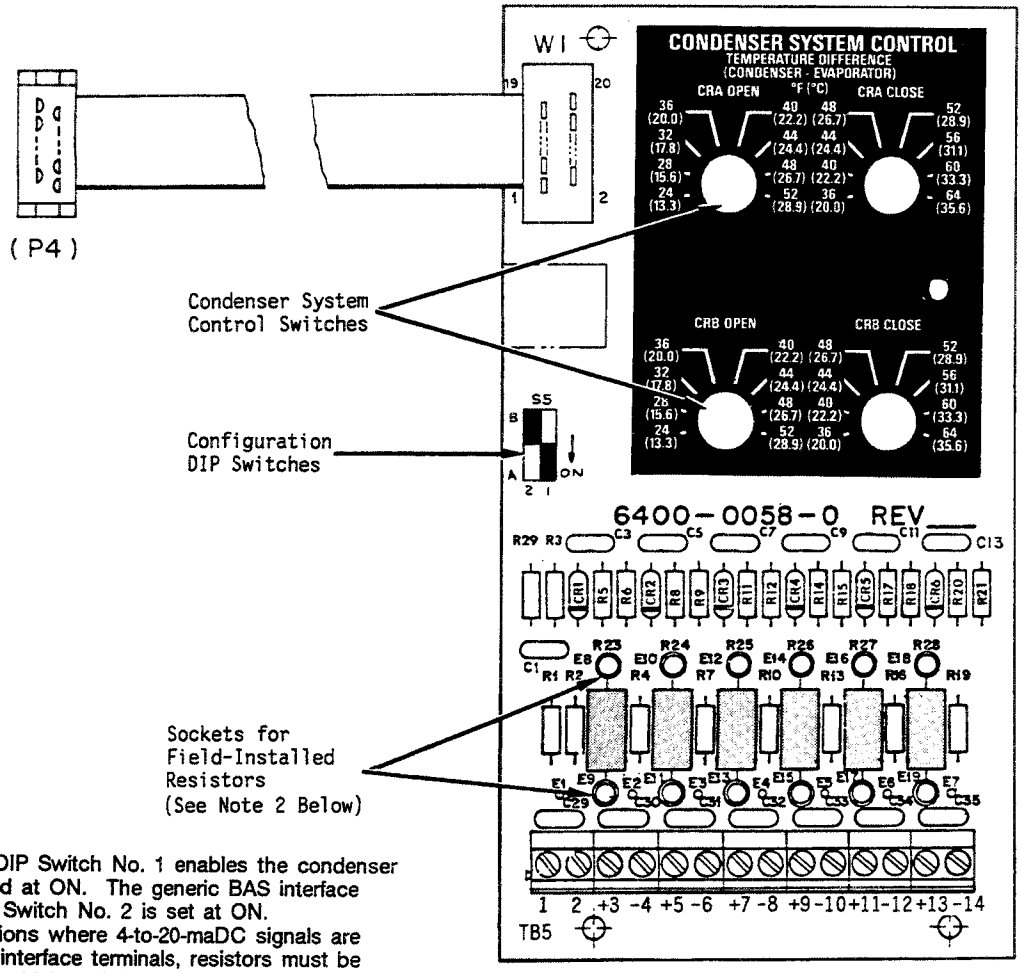

Drwg. 6400-0058C

Notes:

1. Sideboard configuration DIP Switch No. 1 enables the condenser limit function when positioned at ON. The generic BAS interface option is enabled when DIP Switch No. 2 is set at ON.

2. For generic BAS applications where 4-to-20-maDC signals are issued to the SCP's analog interface terminals, resistors must be field-installed on the optional sideboard–just above terminal strip TB5.

Six resistors are factory-included with the optional sideboard–2 resistors for each chiller in the system. To install the resistors, bend the resistor leads at a 90-degree angle; then insert each resistor into the appropriate set of sockets.

Resistor designations are stamped on the sideboard, and are as follows:

R23 = Unit 1 chilled water setpoint
R24 = Unit 2 chilled water setpoint
R25 = Unit 3 chilled water setpoint

R26 = Unit 1 current limit setpoint
R27 = Unit 2 current limit setpoint
R28 = Unit 3 current limit septoint

Remember that chiller designations (i.e., Unit 1, Unit 2 and Unit 3) are determined by DIP switch settings (S11) in each UCP695 chiller control panel.

3. SCP input impedance values for generic BAS applications are as follows:

a. 96.4 kilo-ohms for 0 to +10 VDC control signals (optional sideboard without field-installed resistors); and,

b. 499 ohms for 4 to 20 maDC control signals (optional sideboard with field-installed resistors).

Analog input signals sent to the SCP from the generic BAS are "converted" into unit chilled water and current limit setpoints that are then communicated to the appropriate chiller over the SCP/CenTraVac BCL (i.e., bidirectional communications link).

Note: Remember that each UCP695 chiller control panel connected to the SCP is "tagged" with its own, unique address ("Unit 1", "Unit 2" or "Unit 3") by the setup of DIP Switch Block S11. See "UCP695 DIP Switch Setup" in the Start-Up section of this manual.

When the generic BAS schedules the SCP "off" by opening the "System Enable/ Disable" circuit, the SCP shuts down all chiller operation (i.e., except for those units running under AUTO/LOCAL control).

Unit Chilled Water Setpoints. The value of the analog signal is used to determine how many degrees (F)--if any--are added to the temperature setpoint established at the designated chiller's UCP695 control panel. See Figure 30. If the change upward in the analog signal value is great enough, the chiller may be shut down (i.e., the SCP does not "slew-rate limit" unit setpoint changes issued by a generic BAS).

The SCP uses the following criteria to arrive at a chilled water setpoint that corresponds to the analog control signal issued by the generic BAS:

[ ] When the analog input voltage for a given unit is greater than 0 VDC but less than 1.5 VDC, the SCP will not transmit a chilled water setpoint (CWS) to that unit. (Therefore, the "Remote Chilled Water Setpoint" status indicator light on the chiller panel will not be lit.)

[ ] If the analog input for a given unit is greater than 1.5 VDC but less than 2.0 VDC, the SCP will send a CWS that is equal to that chiller's front panel setpoint (and the "Remote Chilled Water Setpoint" status indicator light on the chiller panel will illuminate).

[ ] The SCP uses this equation to calculate a new CWS for a particular unit when the analog input signal is greater than 2.0 VDC but less than 10.0 VDC:

$$\text{"New" CWS} = \text{Front Panel CWS} + 15\ \text{F}\ \frac{(\text{Analog input} - 2)}{8}$$

Table 14 indicates the amount of chilled water setpoint reset associated with various analog input voltage values ranging from 2.1 VDC to 9.9 VDC.

[ ] Whenever the analog input voltage is greater than 10.0 VDC but less than 12.0 VDC, the SCP transmits a new CWS that is equal to that chiller's front panel setpoint plus 15 F.

Note: The SCP will not apply more than 15 F reset to a unit's front panel chilled water setpoint.

Caution: To avoid damaging the SCP, never apply an analog input signal greater than 12.0 VDC to Terminals TB5-3 thru -8.

Figure 30
UCP695 Chiller Control Panel

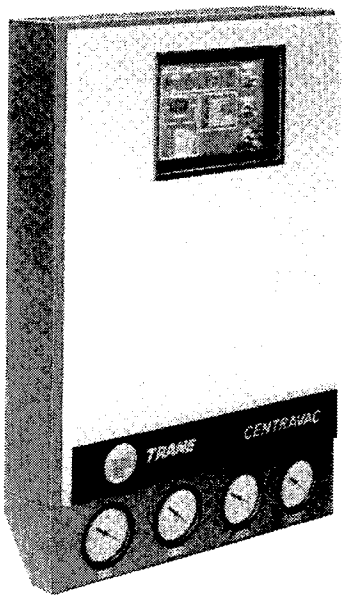

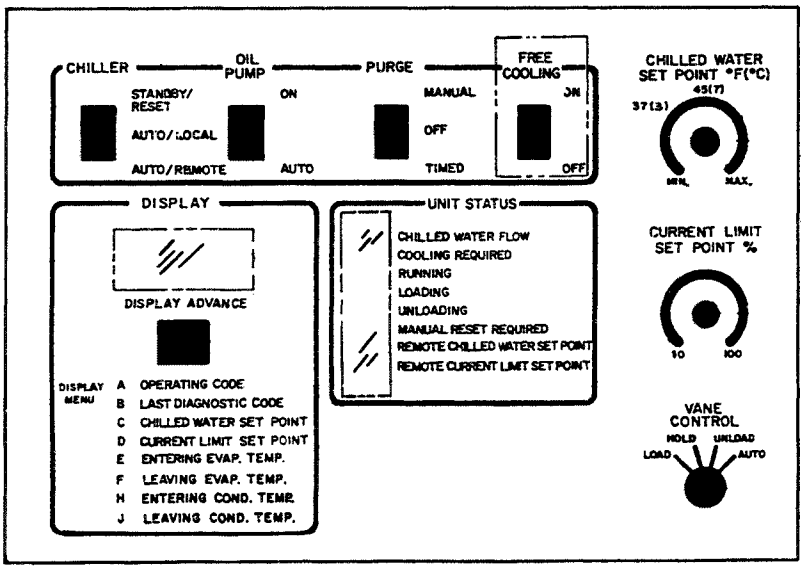

Note: These controls are accessible without opening the control panel door.

Art No.
RF/CTV-1905

Drwg. 6400-0105
(Sheet 6 of 7)

Table 14
Unit Chilled Water and Current Limit Setpoints from Generic BAS Analog Inputs

Analog Input Voltage Signal (Vin) (1, 2)	Temperature Reset Added to Front Panel Chilled Water Setpoint	New Chiller Current Limit Setpoint (3)
0.0 < Vin < 1.5 VDC (or 0 - 3 mA)	No new CWS sent to unit.	No new CLS sent to unit.
1.5 < Vin < 2.0 VDC (or 3 - 4 mA)	New CWS = unit front panel CWS	New CLS = 100%
Vin = 2.1 VDC	Unit CWS + 0.188 F	99.25%
Vin = 2.5 VDC	Unit CWS + 0.938 F	96.25%
= 3.0 VDC	Unit CWS + 1.875 F	92.50%
= 3.5 VDC	Unit CWS + 2.813 F	88.75%
Vin = 4.0 VDC (or 8 mA)	Unit CWS + 3.750 F	85.00%
= 4.5 VDC	Unit CWS + 4.688 F	81.25%
= 5.0 VDC	Unit CWS + 5.625 F	77.50%
Vin = 5.5 VDC	Unit CWS + 6.563 F	73.75%
= 6.0 VDC (or 12 mA)	Unit CWS + 7.500 F	70.00%
= 6.5 VDC	Unit CWS + 8.438 F	66.25%
Vin = 7.0 VDC	Unit CWS + 9.375 F	62.50%
= 7.5 VDC	Unit CWS + 10.313 F	58.75%
= 8.0 VDC (or 16 mA)	Unit CWS + 11.250 F	55.00%
Vin = 8.5 VDC	Unit CWS + 12.188 F	51.25%
= 9.0 VDC	Unit CWS + 13.125 F	47.50%
= 9.5 VDC	Unit CWS + 14.063 F	43.75%
Vin = 9.9 VDC	Unit CWS + 14.813 F	40.75%
10.0 < Vin < 12.0 VDC (or > 20 mA)	New CWS = unit front panel CWS + 15 F	New CLS = 40%

Notes:

1. Analog input voltage values represented in this table include + 3%.
2. Whenever the analog input voltage is "2.0 < Vin < 10.0 VDC", the SCP sends the designated chiller a new chilled water (CWS) or current limit setpoint (CLS) based on these equations:

   a. New CWS = Unit Front Panel CWS + 15 F x ([Vin - 2] / 8)
   b. New CLS = 100% - 60 x ([Vin - 2] / 8)

3. The "new CLS" values in this column replace the designated chiller's front panel current limit setpoint if that unit is operating under AUTO/REMOTE control.

Unit Current Limit Setpoints. Another set of criteria (outlined below) is used to determine chiller current limit setpoints from the generic BAS analog input signals received at SCP Terminals TB5-9 through TB5-14. These new current limit setpoints are then sent to the appropriate chillers over the SCP/CenTraVac BCL.

Remember that chiller shutdown(s) may result if the values of the rate of change in the analog signal values issued by the generic BAS are great enough!

[ ] When the analog input voltage for a given unit is greater than 0 VDC but less than 1.5 VDC, the SCP will not transmit a current limit setpoint (CLS) to that unit.

[ ] If the analog input for a given unit is greater than 1.5 VDC but less than 2.0 VDC, the SCP will send that chiller a CLS that is equal to 100%.

[ ] The SCP uses this equation to calculate a new CLS for a particular unit when the analog input signal is greater than 2.0 VDC but less than 10.0 VDC:

$$\text{"New" CLS} = 100\% - 60\ \frac{(\text{Analog Input} - 2)}{8}$$

Current limit setpoints corresponding to various analog input voltages that range from 2.1 VDC to 9.9 VDC are included in Table 14.

[ ] Whenever the analog input voltage is greater than 10.0 VDC but less than 12.0 VDC, the SCP transmits a new CLS that is equal to 40% for the designated unit.

Caution: To avoid damaging the SCP, never apply analog input signals exceeding 12.0 VDC to Terminals TB5-9 thru -14.

Note: Besides modifying unit chilled water and current limit setpoints, a generic BAS can also initiate system-level free cooling via the SCP. See "Automatic Free Cooling: On/Off FC" in the SCP699 Operation section of this manual.

Condenser Limit Option

Note: This SCP option is intended to signal the cooling tower controller; it is not designed to control cooling tower operation!

The SCP's condenser control option is typically used to regulate cooling tower capacity by providing a 2-stage condenser limiting function. Specifically designed to maintain a minimum refrigerant pressure differential between each unit's evaporator and condenser, this control function also enables the chillers to operate over a broader range of operating conditions.

SCPs equipped with the condenser option include a "condenser water control/generic BAS analog interface" sideboard that is factory- (or field-) installed inside the SCP panel enclosure. See Figure 31. Notice that several sensor input and relay output electrical connections must be field-installed to make the sideboard operational:

1. Depending on the number of chillers connected to the SCP, up to 3 condenser refrigerant temperature sensors must be field-installed and -wired.

Refer to Figure 31. To ensure an accurate reading, each sensor (i.e., part no. 4533-1710-43A) must be epoxied to the condenser refrigerant line located between the unit's economizer and condenser. Do not install the sensor in the refrigerant line well! Remember that: (1) the tip of the thermistor must contact the bare metal of the refrigerant line; and, (2) the sensor and line must be wrapped with Armaflex insulation or equivalent.

The sensor leads are then routed into the low-voltage (upper) section of the UCP695 control panel, where they are connected to Terminals 1TB3-14 and -15. (These terminals are ordinarily designated for use with optional unit ambient temperature sensor 4RT6.)

Note: The SCP obtains evaporator refrigerant temperatures from each chiller control panel. Chiller sensor 4RT5 provides this data; it is factory-installed on all CVHE/B chillers with UCP695 control panels.

2. Two SCP condenser water control output relays--Relay A (CRA) and Relay B (CRB)--must be wired into the cooling tower control circuit. Connections at the SCP are made at Terminals TB1-12 and -13, and Terminals TB1-14 and -15, respectively. See Figure 31.

3. If desired, a condenser water temperature sensor (i.e., part no. 4533-1710-41C) may be installed in the common entering-condenser water pipe.

Note: The temperature input provided by this sensor is checked twice each second, and is used for display purposes only; it is not a part of the condenser limit control function. (See "'Report' Interface" in the SCP699 Operator Interface section of this manual.)

A "COND. SYS. TEMP = 0" entry appears in the SCP's system reports if the condenser system temperature sensor is not installed.

To enable the condenser limit function once these electrical connections are complete, DIP switch No. 1 on the sideboard (Figure 29) must be set at ON. In addition, 2 rotary switches--also located on the sideboard--must be adjusted to establish the desired "open" and "close" values for the condenser output relays.

Condenser Relays A and B are electrically-isolated, normally-open relay outputs that are "on" when the relay contacts are open. These contacts are designed to close--on a staggered basis--when the measured difference in refrigerant temperature between the evaporator and condenser rises to a specified level; "close" setpoint values for both relays range from 36 F to 64 F in increments of 4 F.

The relay contacts will reopen--again, at staggered levels--when the temperature differential drops sufficiently. Adjustment values for the relay "open" setpoints range from 24 F to 52 F in 4-degree increments. (Minimum condenser relay open time is 2 minutes.)

The SCP monitors the refrigerant temperature differential of each operating chiller, and uses the unit with the lowest differential to determine whether additional cooling tower capacity is required. Keep in mind that, once enabled, the condenser limit function is active whenever any of the system's chillers are running in the powered cooling mode.

Note: Condenser limiting is disabled during free cooling operation, and when all of the chillers are off.

Figure 31
SCP Field Wiring Connections for Condenser Limit Control Option

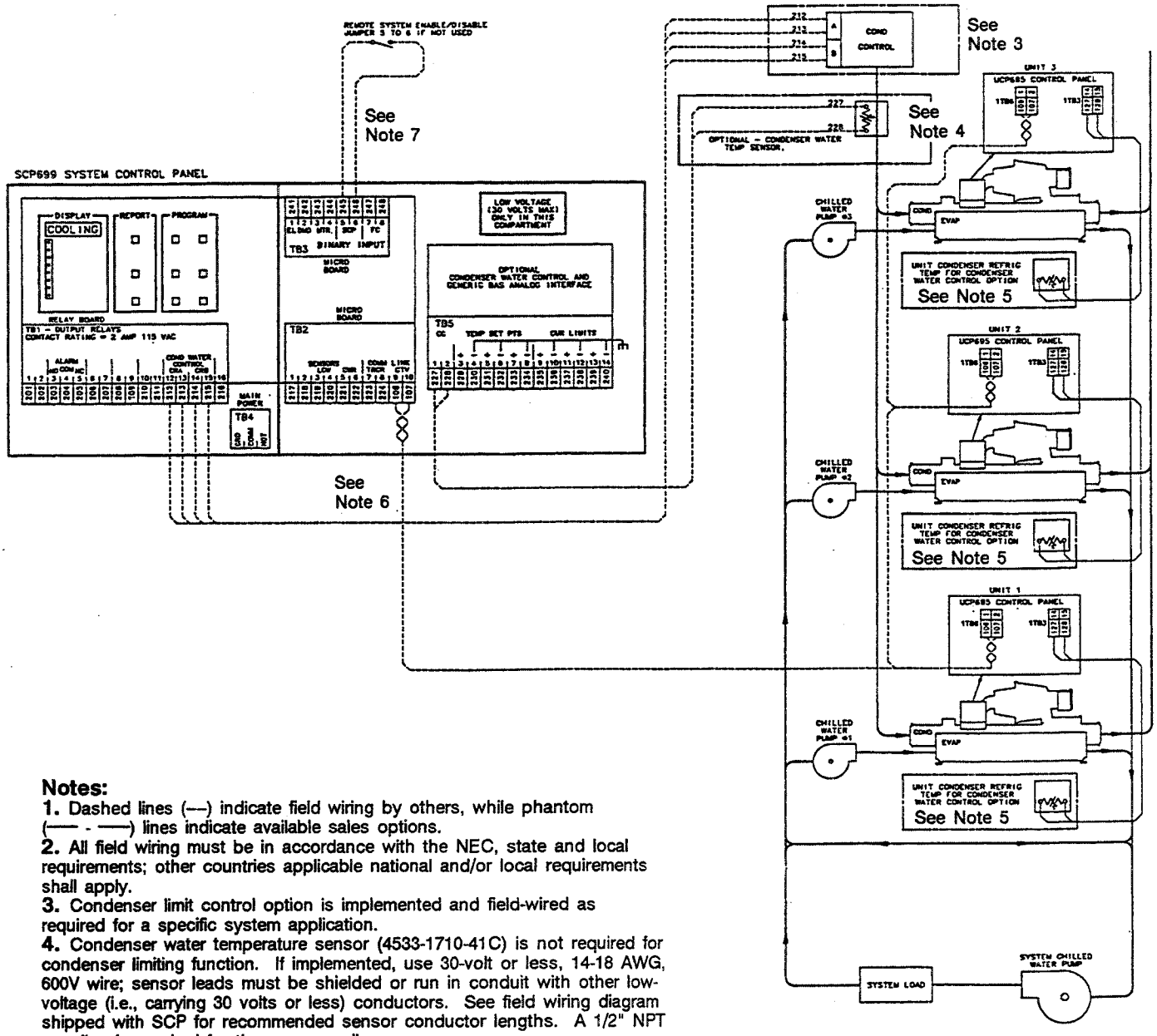

Notes:

1. Dashed lines (—) indicate field wiring by others, while phantom (—— - ——) lines indicate available sales options.
2. All field wiring must be in accordance with the NEC, state and local requirements; other countries applicable national and/or local requirements shall apply.
3. Condenser limit control option is implemented and field-wired as required for a specific system application.
4. Condenser water temperature sensor (4533-1710-41C) is not required for condenser limiting function. If implemented, use 30-volt or less, 14-18 AWG, 600V wire; sensor leads must be shielded or run in conduit with other low-voltage (i.e., carrying 30 volts or less) conductors. See field wiring diagram shipped with SCP for recommended sensor conductor lengths. A 1/2" NPT coupling is required for the sensor well.
5. Wiring included with sensor(s) (4533-1710-43A); field connection required.
6. Shielded, twisted-pair; use 30-volt or less, 14-18 AWG, 600V wire. Maximum conductor length is 5,000 feet. Do not run in conduit with circuits greater than 30V!
7. Use 30-volt or less, 14-18 AWG, 600V wire, and do not run in conduit with circuits exceeding 30V. Silver contacts (or better) are required; do not use series contacts!

WARNING
Disconnect electrical power supply to prevent injury or death due to electrical shock.

Caution
Use copper conductors only to prevent equipment damage (unless otherwise specified).

Drwg. 4533-1707B

Maintenance and Trouble Analysis

Periodic Maintenance

Weekly Checks

[ ] Review the SCP's "SCHEDULE" and "DAY/TIME" program entries; in particular, check the holiday list and update it as necessary for the upcoming week. (For program setup instructions, see "Program Interface: 'Day/Time' Program" in the SCP699 Operator Interface section of this manual.)

Note: Remember that "DAY/TIME" holiday designations are temporary. A day tagged as a holiday one week will return to its normal operating schedule the following week unless the SCP is programmed otherwise.

[ ] Check the SCP's present clock/calendar readout; correct it, if necessary.

Monthly Checks

[ ] Complete the weekly program entry checks.

[ ] Visually inspect the panel for loose or damaged parts or wiring; also check for any accumulation of dirt or moisture.

[ ] Review the SCP's preformatted System (Status), Schedule, System (Control Parameters), and Chiller reports.

Power Failures

In the event of a power failure an electrical backup system (i.e., capacitor) prevents loss of operator-programmed entries for up to 7 days.

A 9-volt, alkaline, transistor-type battery (field-supplied), mounted within the SCP panel enclosure, backs up the control panel clock function for a maximum of 8 hours. Be sure to replace it after extended power outages, or once annually, to ensure that the internal clock function continues to reflect the present time.

If a power failure occurs and the battery is either dead or not installed, scheduled system operation will not occur at the desired intervals since the SCP's internal clock no longer reflects the actual time of day. (That is, when power is restored, the SCP's clock function–i.e., day and time–will resume operation from the point of power interruption.

Trouble Analysis

Error Detection

As explained under "Report Interface", the SCP is designed to detect and record each of the system-level diagnostic conditions listed below:

- AA System Leaving Water Temperature Sensor
- DF Communications Failure
- D9 Power Loss w/Program Retained
- EF Power Loss w/Program Lost
- FF System Control Module (i.e., SCP self-check indicates a malfunction.)

Its CenTraVac bidirectional communication link (BCL) also allows the SCP to detect abnormal chiller operations and record "latching" diagnostic information from the UCP695 chiller control panels. (See Table 5 in SCP699 Operator Interface.)

Detection of a system-level (other than "D9") or "latching" chiller-level diagnostic condition causes the SCP to flash its alphanumeric display and energize its alarm relay (i.e., unless generic BAS is enabled). The display will continue to blink–and the alarm relay remain energized–until the "Display System Report/Alarm Reset*" button is pressed.

Note: "Latching" chiller diagnostics are defined as abnormal unit operating conditions that prompt the chiller to shut down and require manual reset at the UCP695 control panel before the chiller can be restarted.

Chiller-level diagnostic conditions are determined and reported by the SCP based on the following criteria:

1. If any chiller fails to respond to 2 consecutive communication attempts, the SCP considers that chiller to be nonexistent. When this occurs, the SCP alarms this loss of chiller communication with a DF diagnostic.

2. Operating parameters from any chiller that fails to communicate are not included in any of the SCP's preformatted status report displays.

3. All "latching" unit diagnostic conditions are reported at the SCP.

Note: While "latching" unit diagnostics are reported at the SCP when the generic BAS option is enabled, they are not alarmed.

If the chiller reports that the error or diagnostic condition no longer exists, the SCP considers it to be ready to operate.

The last entry of the System (Status) Report advises the most recent diagnostic condition detected and recorded by the SCP at the system or chiller level.

Once a system diagnostic is alarmed, it is important to remember that the SCP will not record a subsequent system error until the "Display System Report/Alarm Reset*" button is pressed.

Further, the SCP will not alarm a diagnostic condition with an error code that is the same as the last error code recorded. For example, if the last diagnostic code recorded in the SCP's memory is "DF" (i.e., communications failure)–and the SCP detects another communications failure, it will neither flash its display nor energize its alarm relay.

However, notice that the original "DF" error code will remain in the system status report either until: (1) another, different diagnostic (e.g., D9/power loss w/program retained) is detected and recorded; or, (2) the diagnostic register is cleared.

To remove the last recorded diagnostic code from the SCP's memory, simply press the "Display System Report/Alarm Reset*" key and hold it down while the system status report is displayed. After the "SYSTEM (and each UNIT) DIAG = " entry appears, the SCP generates a "CLEARED" message. (The current system operating status then returns to the display.)

Note: For your reference, a label listing the condition codes for system and unit diagnostics is affixed to the side of the SCP panel enclosure.

Keep in mind that the SCP will not be able to start a chiller if:

1. that particular unit is presently in a "latching" diagnostic mode. (In this situation, the SCP will attempt to start the next chiller in the start-up rotation order.)

2. that unit remains in a "nonlatching" diagnostic mode (i.e., b d9, b E2, b Ed or b F7; see Table 5) for 10 minutes. (At the end of this period, the SCP will attempt to start the next chiller in the start-up rotation order.)

3. that unit is in the restart inhibit mode (A 70). (The SCP will wait for the restart inhibit period to elapse rather than attempt to start the next chiller.)

Troubleshooting Charts

Note: Troubleshooting charts are provided solely as a guide for determining the cause of a mechanical failure or equipment malfunction. When operational problems do occur, be sure to contact a qualified service organization to ensure proper diagnosis and equipment repair.

Organization of the following troubleshooting chart is based on the possible 2-character system diagnostic condition codes that may be alarmed and displayed in the SCP's System (Status) Report at one time or another. Notice that these codes are arranged alphabetically, and that each is followed by a brief description of the diagnostic condition represented, along with the suggested action(s) for correcting the problem.

Note: When the SCP is "powered up", the "READY" system status message should appear on the alphanumeric display for at least 40 seconds unless a key is pressed. If any other message appears (e.g., "BAD RAM", "BAD ROM", "BAD MICRO", etc.), contact a qualified service technician.

Troubleshooting charts for chiller-level diagnostic conditions are included in the operation/maintenance manual that shipped with each CenTraVac unit. However, in the event that a chiller does not seem to function properly, always:

1. Ensure that the chiller switch (on the UCP695 control panel) is set at "Auto/Remote".

2. Check the SCP's chiller report for that unit. (This will verify that the unit is in communication with the SCP.)

3. Program manual unit chilled water and current limit setpoints at the SCP. (Use the SCP's "CHILLER" program menu.)

To verify that these commands were received at the UCP695 panel, check the UCP's status indicator lights when each setpoint is displayed at the UCP. If the setpoints were received, the "Remote Chilled Water Setpoint" and "Remote Current Limit Setpoint" lights should illuminate. (The pump relay(s) should then energize, and the unit should start.)

4. Single-Chiller System Applications Only. If the SCP's system leaving chilled water temperature sensor is not installed, verify that the chiller's address is "1". (See "UCP695 DIP Switch Setup" in the Start-Up section of this manual.)

WARNING: To prevent injury or death due to electrical shock, lock power supply disconnect open before removing SCP panel enclosure. It may be necessary to open several disconnects to remove all connected power from the SCP.

Troubleshooting Chart

Code	System Diagnostic Description	Recommended Action
AA	System Leaving Chilled Water Temperature Sensor	Contact a qualified service oganization; or, Check sensor connections at: (1) SCP Terminals TB2-3 and TB2-4; (2) sensor; and (3) intermediate points for open, shorted or loose connections. Repair wiring connections or replace sensor, as necessary. Note: This diagnostic only occurs if more than 1 chiller is connected to the SCP.
DF	Communications Failure	**WARNING: To prevent injury or death due to electrical shock, lock power supply disconnect open before removing SCP panel enclosure. It may be necessary to open several disconnects to remove all connected power from the SCP.** Secure all chillers, chilled water pumps, and connected equipment. Remove power from the UCP695 chiller control panels; then disconnect power from the SCP. Wait 1 minute; then restore power to the SCP and UCP695 control panels. If the "DF" diagnostic persists, contact a qualified service organization.
D9	Power Loss w/Program Retained	Clear the diagnostic. If the cumulative length of power outages exceeds 6 hours, replace the battery backup. Note: The battery's charge is depleted with each successive power loss; it is not recharged when power is restored to the SCP.
EF	Power Loss w/Program Lost	Clear the diagnostic and reprogram the SCP.
FF	System Control Module	**WARNING: To prevent injury or death due to electrical shock, lock power supply disconnect open before removing SCP panel enclosure. It may be necessary to open several disconnects to remove all connected power from the SCP.** Secure all chillers, chilled water pumps, and connected equipment. Remove power from the UCP695 chiller control panels; then disconnect power from the SCP. Wait 1 minute; then restore power to the SCP and UCP695 control panels. If the "FF" diagnostic persists, contact a qualified service organization.

Note: This troubleshooting chart is provided solely as a guide for determining the cause of a mechanical failure or equipment malfunction. When operational problems do occur, contact a qualified service organization to ensure proper diagnosis and equipment repair.

SCP Operator Reference Guide

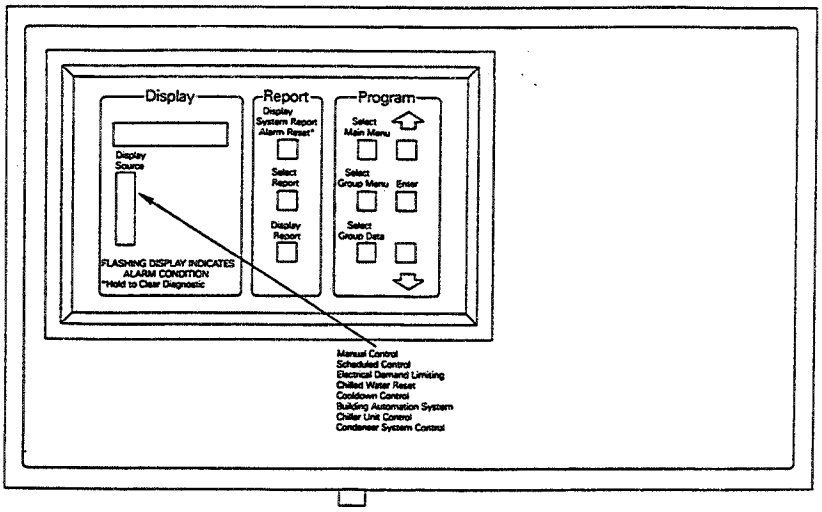

RF/CTV-1902B

Preformatted SCP Reports

DISPLAY SYSTEM REPORT/ALARM RESET*

SYSTEM (STATUS) REPORT
(Ref. pp. 12-16)

[ ] SYSTEM
CHLD. WTR.
TEMP =
SET =

[ ] CURRENT
LOAD =
LIM =

[ ] COND. SYS.
TEMP =

[ ] SYSTEM
DIAG =

[ ] UNIT 1
DIAG =

[ ] UNIT 2
DIAG =

[ ] UNIT 3
DIAG =

SELECT REPORT

SCHEDULE REPORT
(Ref. p. 16)

DAY/TIME REPORT
(Ref. p. 16)

SYSTEM REPORT
(CONTROL PARAMETERS)
(Ref. pp. 16, 17)

CHILLER REPORT
(Ref. 17-19)

DISPLAY REPORT

[ ] MON
[ ] SET =
[ ] BGN =
[ ] END =
[ ] ELSE =

[ ] THU 13.56

[ ] CHLD. WTR.
SET =

[ ] CURRENT
LIM =

[ ] FREECOOL
SET =
TEMP =

[ ] EL. DEMAND
LOAD =
LIM =

[ ] RESET
TEMP =

[ ] COOLDOWN
LIM =

[ ] COND. SYS.
TEMP =
HEAD =

[ ] UNIT 1
MODE =
CHLD. WTR.
TEMP =
SET =
CURRENT
LOAD =
LIM =
(HT. RCVRY)

[ ] UNIT 2
MODE =
CHLD. WTR.
TEMP =
SET =
CURRENT
LOAD =
LIM =
(HT. RCVRY)

[ ] UNIT 3
MODE =
CHLD. WTR.
TEMP =
SET =
CURRENT
LOAD =
LIM =
(HT. RCVRY)

[ ] UNIT SEQ.
UNIT 2
UNIT 3
UNIT 1

Note: System and unit diagnostic code conditions are listed on a label affixed to the right-hand side of the SCP699 System Control Panel.

SCP Programming Aid

Use right-hand column to record SCP program entries for your chiller system application.

Press "Select Main Menu"	Press "Select Group Menu"	Press "Select Group Data"	Range of Available Control Settings	Operator Entry
SCHEDULE (Ref. pp. 21,22)	MON., TUE., WED., THU., FRI., SAT., SUN., HOL.	SET = (Chilled Water Setpoint)	OFF*, MON.-HOL., 1-99 F	MON. ____ FRI. ____ TUE. ____ SAT. ____ WED. ____ SUN. ____ THU. ____ HOL. ____
		BGN = (Scheduled Begin Time)	00:00*-23:45	MON. ____ FRI. ____ TUE. ____ SAT. ____ WED. ____ SUN. ____ THU. ____ HOL. ____
		END = (Scheduled End Time)	00:00*-23:45	MON. ____ FRI. ____ TUE. ____ SAT. ____ WED. ____ SUN. ____ THU. ____ HOL. ____
		ELSE = (Alternative Chilled Water Setpoint)	OFF*, 1-99 F	MON. ____ FRI. ____ TUE. ____ SAT. ____ WED. ____ SUN. ____ THU. ____ HOL. ____
DAY/TIME (Ref. pp. 22-24)	HOLIDAY	MON. (Monday)	= HOL.; ,NO*	
		TUE. (Tuesday)	= HOL.; ,NO*	
		WED. (Wednesday)	= HOL.; ,NO*	
		THU. (Thursday)	= HOL.; ,NO*	
		FRI. (Friday)	= HOL.; ,NO*	
		SAT. (Saturday)	= HOL.; ,NO*	
		SUN. (Sunday)	= HOL.; ,NO*	
	Present Day/Time	Day	MON.*-SUN.	
		Hours	00*-23	
		Minutes	00*-59	
SYSTEM (Ref. pp. 24-28)	CHLD. WTR.	SET = (Lvg. Chilled Water Temp.)	AUTO*, OFF, 1-99 F	
	CURRENT	LIM. = (System Current Limit)	AUTO*, 0-100%	
	FREECOOL (T'stat-controlled, automatic FC option)	SET = (Auto FC Sensor Temp.)	ON, AUTO, OFF*, 0-140 F	
		SET = (FC Chilled Water Setpoint)	1*-99 F	
	EL. DEMAND	LIM. = (System Current Limit)	0*, 1-100%	
		RATE = (Meter Pulse Program Constant)	0*-99	
	RESET (Chilled Water)	RATE = (CWR Reset Rate)	0*, 1-199%	
		SET = (CWR Setpoint Temp.)	0 F*, 1-140 F	
	COOLDOWN	LIM. = (System Current Limit)	0*, 1-100%	
		END = (Duration of Cooldown and Automatic Free Cooling)	00.00*-02.00	
	CONTROL	GAIN = (SCP Responsiveness to Cooling Requirement Changes)	1*-100	
CHILLER (Ref. pp. 28-30)	UNIT 1, UNIT 2, UNIT 3	SET = (Lvg. Chilled Water Temp.)	AUTO*, OFF, 1-99 F	Unit 1 ____ Unit 2 ____ Unit 3 ____
		LIM. = (% of Compressor RLA)	AUTO*, 0-100%	Unit 1 ____ Unit 2 ____ Unit 3 ____
		SET = (Order in Unit Start Rotation)	1*, 2, 3	Unit 1 ____ Unit 2 ____ Unit 3 ____
		LOAD = (Unit capacity--% of total)	1*-100%	Unit 1 ____ Unit 2 ____ Unit 3 ____
	UNIT SEQ.	RATE = (Rotation Period for Chiller Start Order)	0*-100 days	
		LOAD = (% of Compressor RLA)	20*-100%	
		LIM. = (% of Compressor RLA; Unit Seq. Load > Unit Seq. Limit + 20)	0*-80%	

Note: Asterisked control setting values indicate the SCP's default settings.

SCP "Configuration" Switch Settings

Check the appropriate box to record DIP switch settings. (Table 1, on page 7, defines DIP switch positions.)

Pump Relay Command
[ ] On [ ] Off DIP Switch No. 1

Alarm Relay
[ ] On [ ] Off DIP Switch No. 2

Degrees F/C Display
[ ] On [ ] Off DIP Switch No. 3

Chilled Water Reset
[ ] On [ ] Off DIP Switch No. 4

SCP Address
[ ] On [ ] Off DIP Switch No. 5
[ ] On [ ] Off DIP Switch No. 6
[ ] On [ ] Off DIP Switch No. 7
[ ] On [ ] Off DIP Switch No. 8
[ ] On [ ] Off DIP Switch No. 9

Not Used
[ ] On [ ] Off DIP Switch No. 10

Auxiliary DIP Switch Settings (Optional Sideboard)

Opt. Condenser Limit Control
[ ] On [ ] Off DIP Switch No. 1

Opt. Generic BAS Interface
[ ] On [ ] Off DIP Switch No. 2

For further information on this product or other Trane products, refer to the "Trane Service Literature Catalog", ordering number IDX-IOM-1. This catalog contains listings and prices for all service literature sold by Trane. The catalog may be ordered by sending a $20.00 check to: The Trane Company, Service Literature Sales, 3600 Pammel Creek Road, La Crosse, WI 54601.

Side 2 of 2
July 10, 1986

PRINTED BY PRODUCTION SERVICES — LA CROSSE BB/LW

TRANE

UCP2 – A First Look

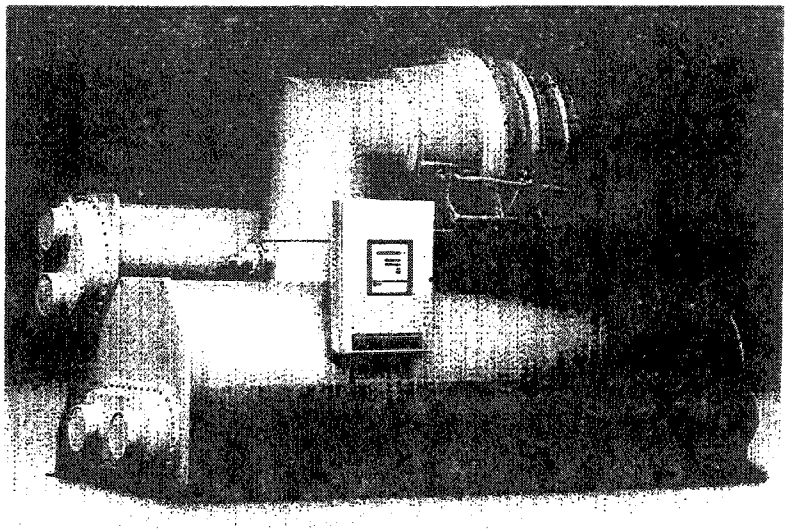

Technical Training
Student Handbook

ST-MNL-4

©American Standard Inc. 1995

CONTENTS

INTRODUCTION 4

SYSTEM OVERVIEW 5

CRUISING THE MENU 11
- Report Group Keys 12
- Settings Group Keys 12
- Data Control Keys 13
- Auto Key 13
- Stop Key 13

REPORTS 14
- Custom Report 14
- Chiller Report 15
- Refrigerant Report 17
- 30-Day Summary Data 19
- Compressor Report 21

SUMMARY 23

This manual is a companion to the Trane seminar of the same name. To order additional copies of this manual, contact:

Service Literature Department
The Trane Company
3600 Pammel Creek Road
La Crosse, WI 54601

Please specify literature order number ST-MNL-4.

The following related material is also available through Trane Service Literature:

ST-MNL-5 "UCP2 – The Operator's Perspective"

INTRODUCTION

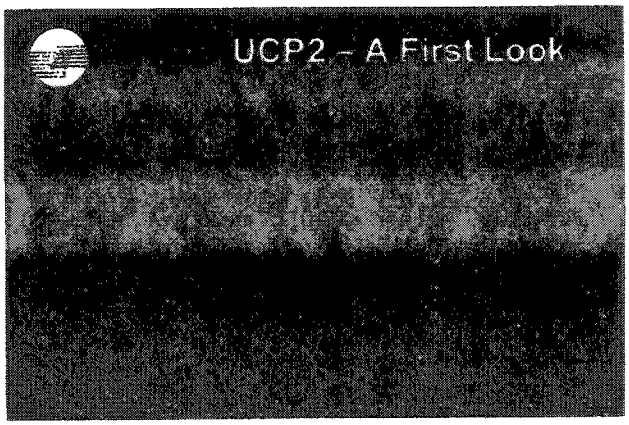

Figure 1

(Figure 1) The purpose of this manual is to introduce technicians and building owner operator personnel to the construction and operation of the Trane "UCP2" control system for heavy refrigeration chillers. This control system employs Trane's Enhanced Adaptive Control™ technology which has evolved from the Adaptive Control™ strategies used by the earlier UCP-695 control system.

UCP2 is not the first microcomputer-based control system used by Trane. It is, however, the most "intelligent" system available so far. This system can adapt to changing conditions in the HVAC system to keep a chiller running at "best" conditions and keep it producing chilled water in situations that would likely result in a shutdown using many other control systems.

The UCP2 system with Enhanced Adaptive Control™ is utilized on several Trane product lines. This course covers model CVHE and CVHF centrifugal chillers and RTHB helical-rotary chillers. These chillers range in capacity from 130 to 1,250 tons.

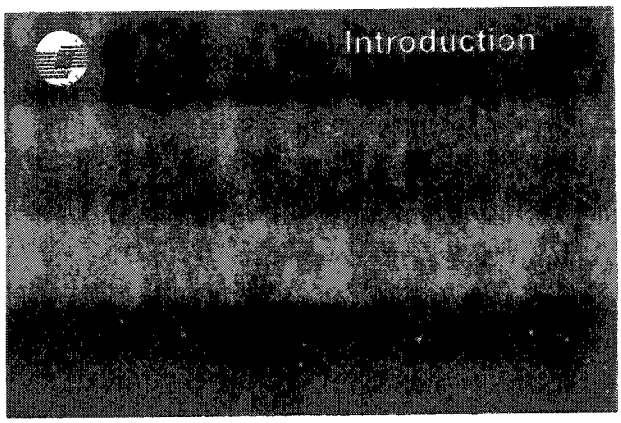

Figure 2

(Figure 2) This manual will show how Trane's UCP2, using Enhanced Adaptive Control™, has added flexibility, reliability and improved system performance to what was already the best chiller control system in the industry. It will show the overall physical organization of UCP2 system components and explain their functions. Finally, this manual will teach the reader how to use the UCP2 operator panel to access and utilize the unprecedented amount of data that UCP2 makes available.

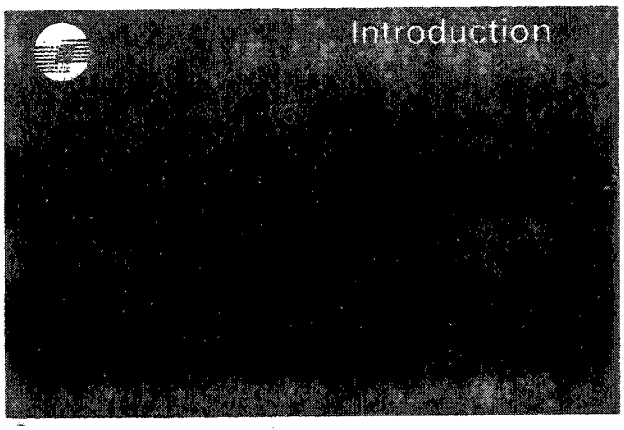

Figure 3

(Figure 3) The first generation Trane microprocessor chiller control system was officially designated UCP-695, although many people referred to it as the 'micro panel' because it was the first microprocessor control used on large centrifugal and helical rotary chillers. To simplify matters, this manual will refer to the older UCP-695 as the 'UCP1' and to the current system as 'UCP2'. This manual will examine the UCP2 control, first as an overall system, then its individual components. It will discuss the clear language display or CLD, which is the operator control panel for the system, and explain the benefits of the information this control can provide the chiller operator.

SYSTEM OVERVIEW

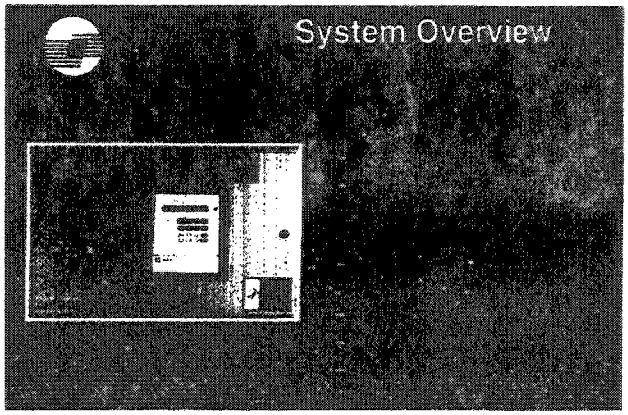

Figure 4

(Figure 4) UCP2 is the 2nd-generation microcomputer control system for Trane heavy-refrigeration water chillers. The acronym UCP2 simply stands for "unit control panel number two". UCP2 refers to the panel itself, all internal components and all peripheral devices (sensors, relays, communication links, etc.) needed for its proper operation. Some of these devices are not even located inside the panel.

UCP2 is the 'brain' of the chiller system. It evolved from UCP1 through customer feedback about what more they want a unit-level chiller control system to do. What they told us is that "a **good** chiller control system should":

- Produce chilled water at setpoint when needed
- Protect the chiller
- Keep the chiller on-line as long as possible during adverse operating conditions (This is where the term "Adaptive Control" comes in. The control system adapts chiller operation to changing conditions in the system to keep it performing.)
- Detect refrigerant loss - both long term leakage and catastrophic release

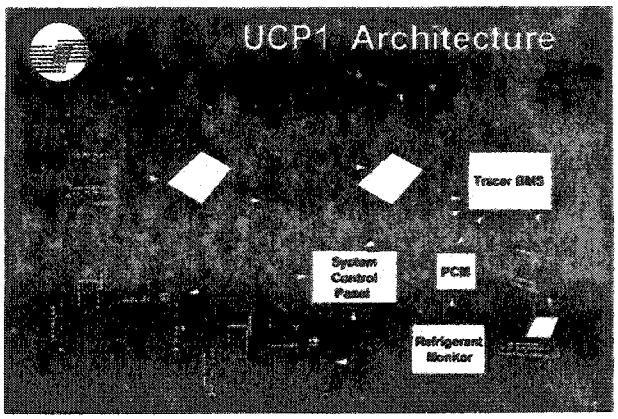

Figure 5

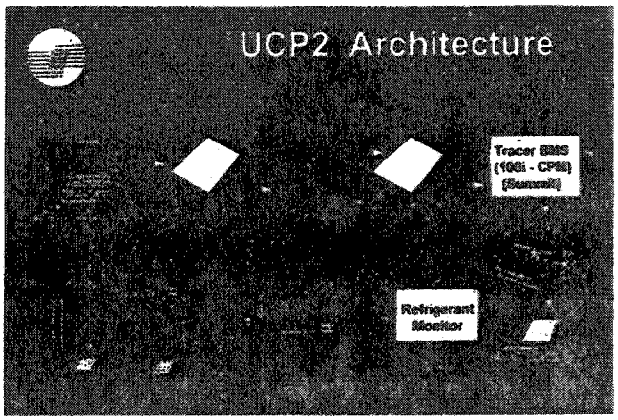

Figure 6

(Figure 5) (Figure 6) These two figures make a few basic system-level comparisons of UCP1 and the new UCP2:

UCP1 required a Trane SCP (System Control Panel) in order to communicate with higher-level devices such as the Trane Tracer or other building management systems (BMS). UCP2 communicates directly with the building management system.

UCP2 receives input directly from same-level or lower-level devices and reports to higher-level devices, such as a Tracer, through a direct communication link (no SCP needed). Also, UCP2 is backward and forward-compatible with all generations of Tracer equipment.

With UCP1, a programmable control module (PCM) was needed to allow device such as a equipment room refrigerant vapor level monitors to communicate with a Tracer or another BMS. UCP2 can accept equipment room refrigerant concentration level data directly from a refrigerant monitor and report the data back to the system level BMS.

Using UCP1, printed reports of chiller activity or refrigerant monitor data could only be generated at the system (BMS) level. The UCP2 can output reports directly to a printer within 50 feet of the chiller and/or to a printer at system level (Tracer) at a remote location.

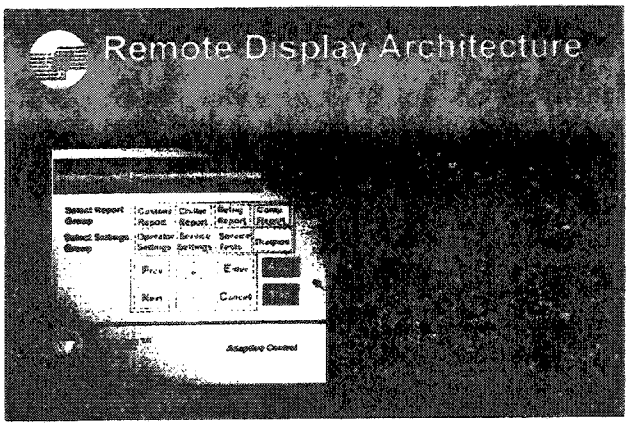

Figure 7

(Figure 7) In addition to its enhanced unit and system-level features, a "remote-control" version of the UCP2 operator panel is available that will control the chiller from as far away as 1,500 feet. This single low-cost panel will also control up to three additional UCP2-equipped chillers.

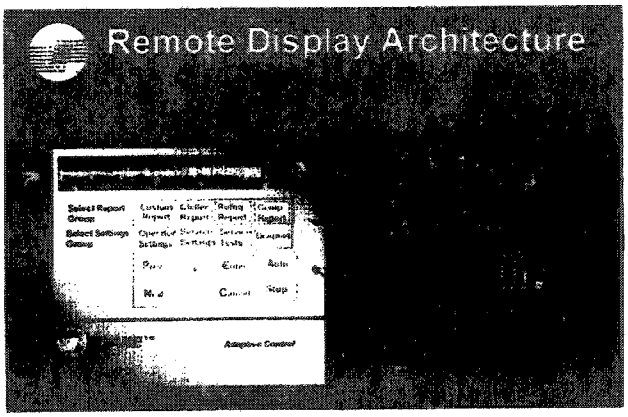

Figure 8

(Figure 8) The remote display can even communicate with different types of chillers, as long as they are equipped with a Trane UCP2 control system.

Remote control of multiple chillers is discussed in more detail later in this manual.

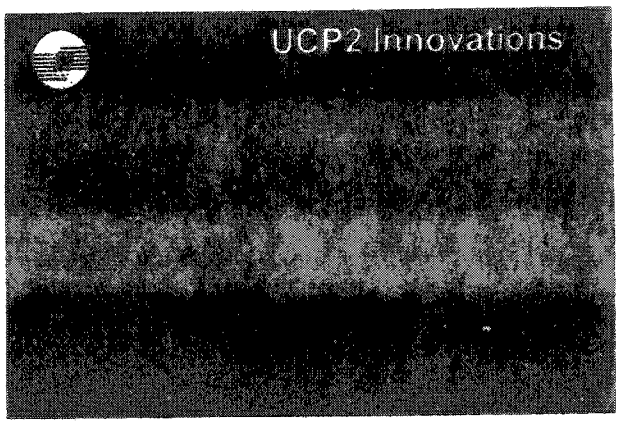

Figure 9

(Figure 9) The text items in these figures are color-coded. Yellow indicates standard equipment or features, while optional items are shown in aqua.

The UCP2 system design is modular by function. The chiller can be equipped with options that customize its control for the building system it is applied to. Also, the control system can be upgraded in the future as needed to meet changing building system or equipment room requirements. This also results in lower replacement parts costs, since individual modules are less expensive to replace than the old all-in-one UCM.

All data acquisition and chiller control are accomplished at the UCP2 operator control panel (i.e., clear language display). Information provided by the display is presented in clear language (i.e., English, French, German, etc.) rather than in code as with UCP1.

As previously mentioned, UCP1 needed a System Control Panel (SCP) to control chillers remotely or to access multiple chillers. UCP2 can be controlled by an inexpensive remote display panel or can talk directly to a Tracer.

Many features that were costly options for UCP1 are standard on UCP2. All that is required is that they be enabled from a menu. Most other optional features can be provided with the purchase of only one additional electronic module.

UCP2 brings a higher level of motor and compressor protection, including improved motor winding and oil pressure protection systems and simplified wiring between the motor terminal box and remote-mounted starter panels.

UCP2 has more precise capacity control. Stepper actuator motors for guide vanes and expansion valves do not use limit switches. The control system knows chiller loading condition at all times.

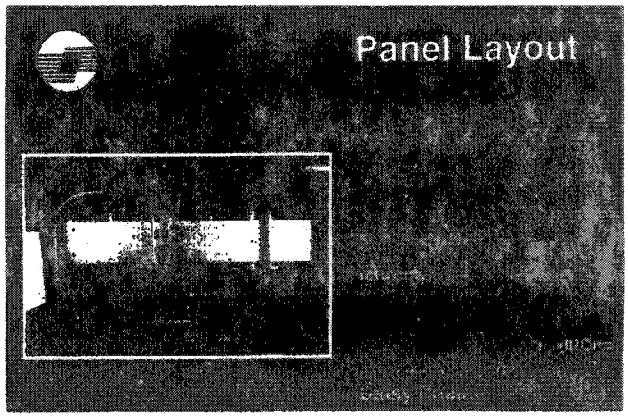

Figure 10

(Figure 10) The UCP2 panel will contain anywhere from four to eight electronic modules, depending on the type of chiller and features ordered. One module is mounted in the motor starter panel and one in the purge control panel on centrifugal chillers.

The Interprocessor Communications Link (twisted-pair wire) provides the communication path between modules. The Purifier Purge™ system used on low pressure chillers is also controlled and monitored at the UCP2 display panel.

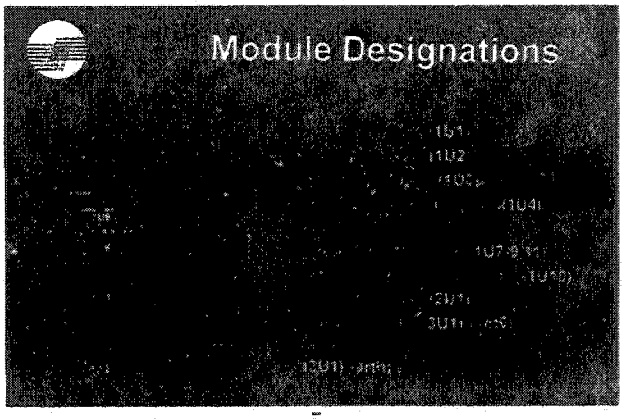

Figure 11

(Figure 11) The individual UCP2 electronic modules mounted in the panel are:

1U1 = Chiller Module;
1U2 = Circuit Module;
1U3 = Stepper Module;
1U4 = Clear Language Display;
1U5 = Options Module;
1U7 = Printer Interface Module;
1U8 = Tracer COM3 Interface;
1U9 = IPC Buffer;
1U10 = Input/Output Module;
1U11 = Tracer COM4 Interface

The clear language display (1U4) is mounted in the control panel door so that it is visible with panel door closed. All of the modules except 2U1 (the starter module) and 3U1 (the purge module) are located inside the UCP.

When RTHB units use a remote-mounted starter, a 3U1 module is mounted inside the motor terminal junction box on the chiller. On the RTHB, this 3U1 module is actually a phase sequence monitor for the compressor motor instead of a purge control device.

This is used because making the wrong electrical connections at the RTHB motor will cause reverse rotation of the compressor, resulting in immediate, catastrophic compressor damage.

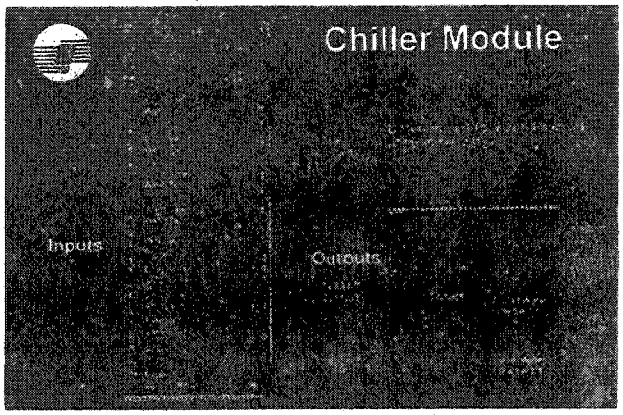

Figure 12

(Figure 12) The chiller module (1U1) is the "master module", collecting data, status conditions, diagnostic information, etc. from the other modules (over the IPC link) from sensors and remote contacts and in turn, communicating commands to other modules.

The chiller module performs leaving water temperature and limit control algorithms, trading off chiller capacity against various "limits" that the chiller may be working against.

It checks for valid setpoints and identifies the chiller type for the other modules. 1U1 also maintains all stored setpoints in non-volatile memory in the event of a power loss.

Chiller module electrical inputs and outputs are shown on the chiller control system wiring schematics.

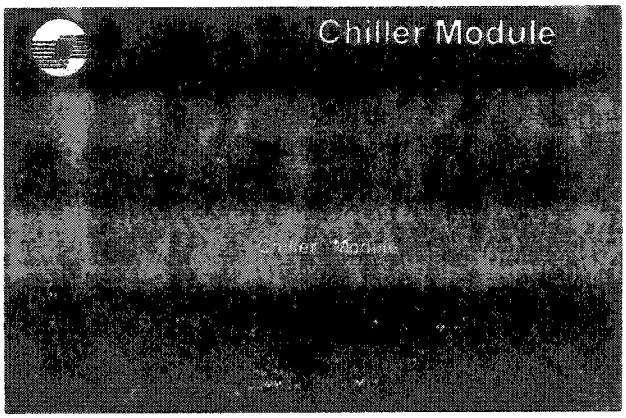

Figure 13

(Figure 13) During operation, the chiller module continuously "scans" the various modules for information over the IPC link. It completes a scan of the system about every two seconds.

This scan includes communication with any remote display used in the system and sending data to the local printer.

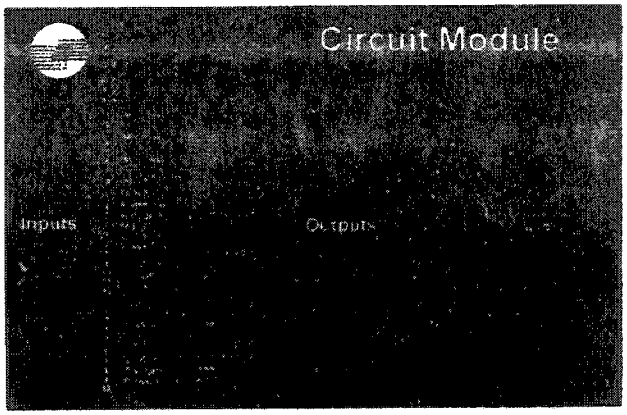

Figure 14

(Figure 14) The circuit module is assigned functions associated with compressor motor protection, the chiller lubrication system and refrigerant monitoring.

Circuit module electrical inputs and outputs are shown on the chiller control system wiring schematics.

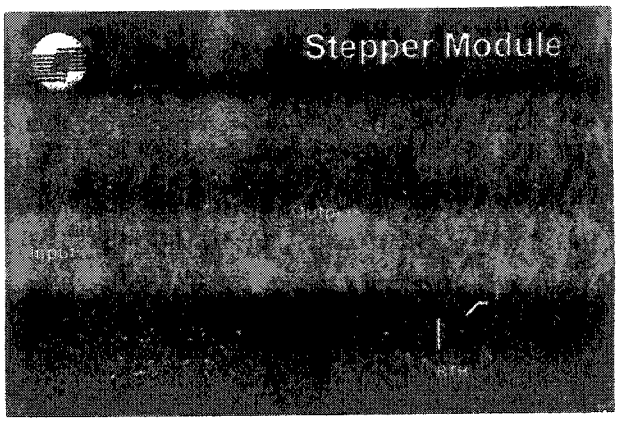

Figure 15

(Figure 15) The main function of the stepper module (1U3) is to drive the inlet guide vane stepper motor (CTV) or electronic expansion valve stepper motor (RTHB), in response to signals received from chiller module 1U1. This module also receives feedback on the actual open/closed position of the inlet guide vanes or the electronic expansion valve. The circuit module also monitors evaporator and condenser saturated refrigerant temperature and provides inputs for the discharge temperature and bearing temperature sensors. The module electrical inputs and outputs are shown on the chiller control system wiring schematics.

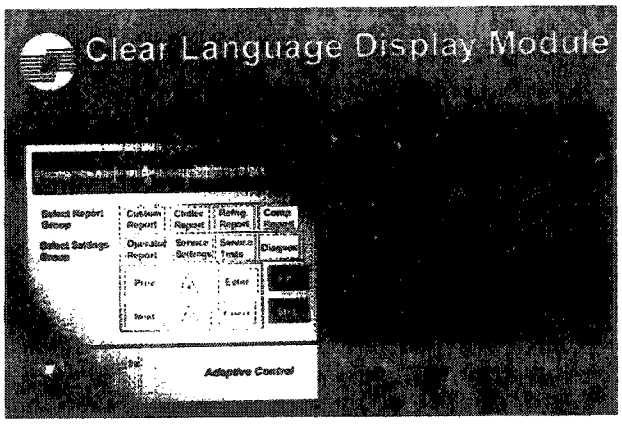

Figure 16

(Figure 16) The clear language display module, or CLD, is the operator panel for the UCP2 control system. It is the bridge between man and machine. Mounted in the control panel door, the CLD is viewed from the front of the panel. The module allows the operator to monitor system conditions as it displays chiller data, including chiller operating status, setpoints, operating conditions, unit configuration, purge conditions, service and diagnostic settings on the LCD screen. The operator controls chiller operation by pressing combinations of the keys provided on the panel. Electrical inputs and outputs are shown on the chiller wiring schematics.

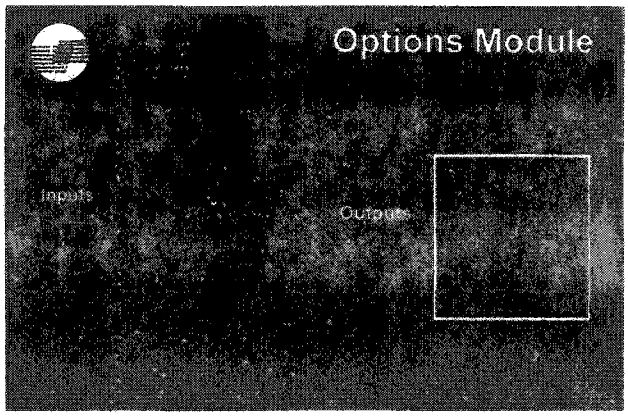

Figure 17

(Figure 17) As its name implies, the options module (1U5) provides the control or interface requirements for many of the options available with the UCP2. Some features provided by this module include ice-making, heat recovery, free cooling, head relief request and eternal chilled water setpoint, to name a few.

The options module electrical inputs and outputs are shown on the chiller control system wiring schematics.

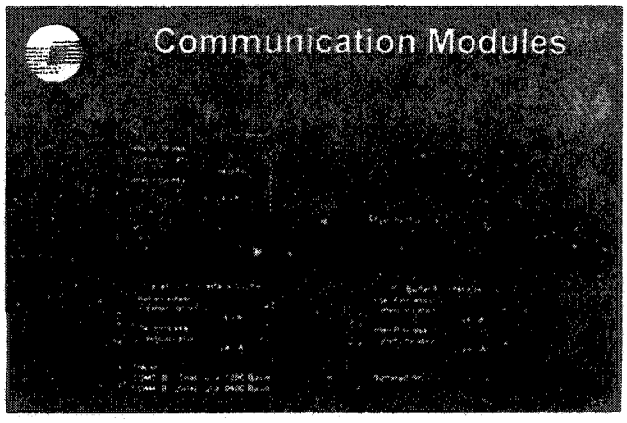

Figure 18

(Figure 18) The optional printer interface module (1U7) allows a preformatted chiller log to be output at a printer right at the chiller location. The UCP2 can be programmed using the CLD to print a chiller log on command, at the time of a diagnostic, or on a periodic basis.

There are two optional Tracer communication interfaces available, depending on which Tracer it will be communicating with. The Tracer COM3 interface module (1U8) provides an isolated, 1200-baud, bi-directional serial communication link to a Tracer 100/ Tracer i/Chiller Plant Manager or a generic BMS panel.

The Tracer COM4 interface module (1U11) provides a non-isolated, 9600-baud, bi-directional serial communication link to the Tracer Summit or Tracer i.

The IPC Buffer Module (1U9) is the communication interface needed between the UCP2 and any Remote CLD. If a remote panel is not used, this module is not required. It must be provided on any chiller (maximum of four) talking to a Remote CLD.

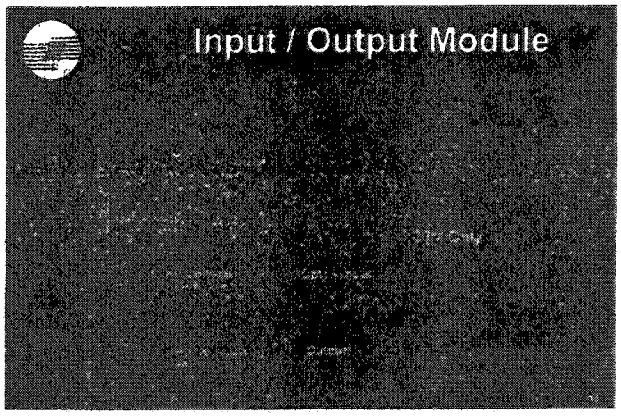

Figure 19

(Figure 19) The Input/Output module, (1U10) is provided only when a centrifugal chiller is equipped with the hot gas bypass (HGBP) option. This module operates the hot gas bypass valve on CVHE and CVHF units in response to signals from stepper module 1U3. The module also receives input on HGBP valve position from the HGBP valve end switch.

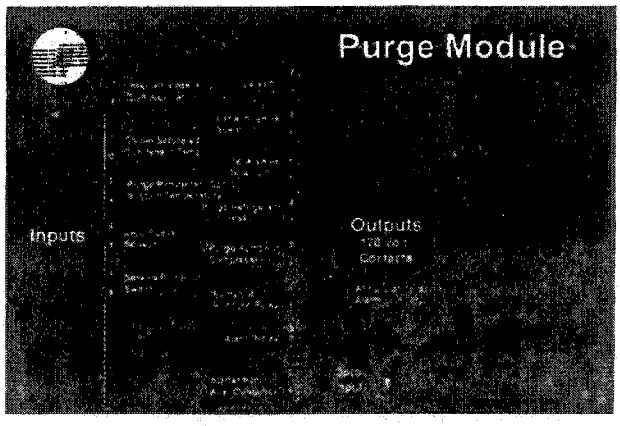

Figure 20

(Figure 20) The purge module (3U1) is provided with the Trane Model PGRC Purifier Purge used on CVHE and CVHF chillers. It is located in the purge control panel at the purge location. It provides all inputs and outputs for the UCP2 to control purge operation.

Purge module electrical inputs and outputs are shown on the chiller control system wiring schematics.

IMPORTANT: Although the RTHB chiller does not have a purge, it does utilize a device designated as 3U1 in certain cases. When the RTHB chiller uses a remote starter, a phase-sequence monitor (3U1) is mounted in the unit-mounted motor terminal junction box.

Proper phase-sequencing is critical to prevent reverse compressor rotation which will cause extensive damage almost instantly. Although the starter module provides this protection, if the starter is remotely mounted, it is possible to cross leads from the starter to the compressor motor.

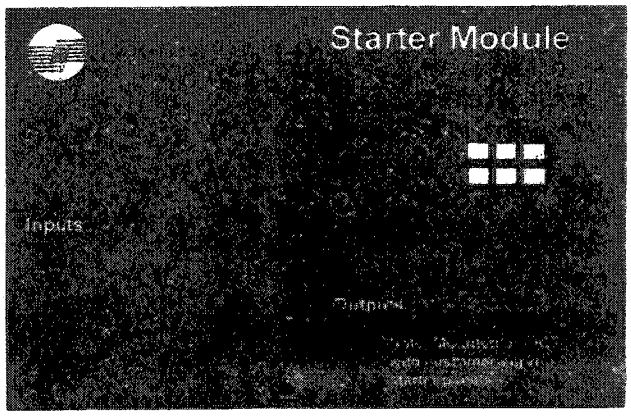

Figure 21

(Figure 21) The starter module (2U1) is present in all Trane-provided starter panels, whether unit-mounted or remote.

For centrifugal chillers, if no Trane starter is provided and the customer is providing the starter instead, 2U1 is mounted in an extension of the unit control panel. It is still designated as 2U1, however. For RTHB units, 2U1 is always located in the starter panel.

2U1 controls the starter when starting, running and stopping the compressor motor and provides an interface to all types of starters and AFD's (adjustable frequency drives). 2U1 provides compressor motor protection for running overload, phase reversal, phase loss, phase unbalance and momentary power loss.

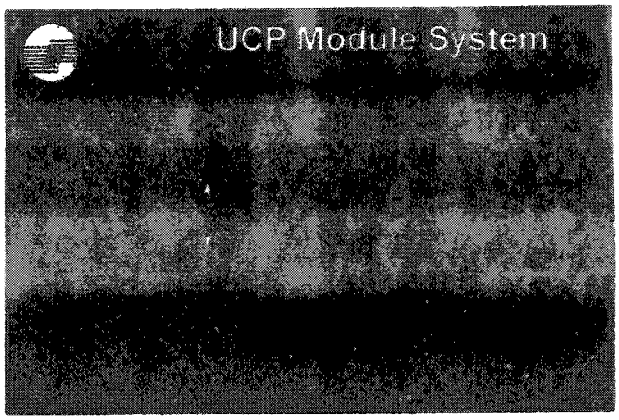

Figure 22

(Figure 22) This figure provides a summary of module organization and function. It also identifies their communication hierarchy (i.e., BMS level, System level, Unit level).

All UCP2 modules are at unit-level, either in the UCP2 panel, in the purge panel, starter panel or in the immediate vicinity of the chiller (i.e., a printer). A printer could also be located at the Tracer or other BMS level.

A remote clear language display would be considered to be located at system (i.e., chilled water system) level.

A Tracer or any other building management system and their communication links to unit control modules (UCMs) on HVAC or other types of equipment are on the BMS or building level. In addition to chillers, the BMS could be controlling air handlers, VAV systems, lighting and electrical equipment, etc.

CRUISING THE MENU

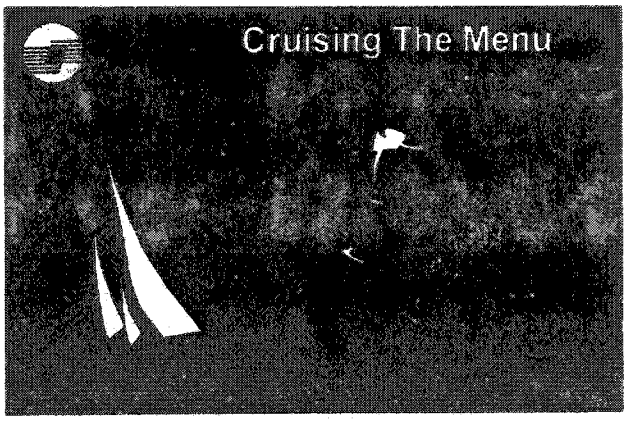

Figure 23

(Figure 23) The next portion of this manual examines the UCP2 menu structure and the functions of the clear language display and operator control keypad.

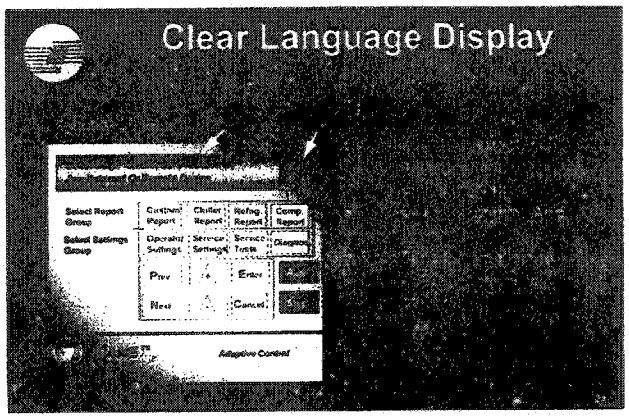

Figure 24

(Figure 24) The liquid crystal display screen and the sixteen-key membrane keypad together are referred to as the "Clear Language Display" or abbreviated as the "CLD". The CLD is mounted in the door panel of the UCP2. It is the designated as the "local" CLD. An identical, remote CLD is available also.

The chiller is controlled by pressing appropriate key combinations on the keypad. It provides access to control setpoints, and chiller setup information. All settings and adjustments are made from the menus in the CLD.

The two-line, forty-character liquid crystal display (LCD) screen will display the chiller data. The display screen backlights anytime a key is pressed. Chiller operators will be able to choose their preference of seven languages to display this information.

An "Alarm" light emitting diode (LED) is also located on the face of the CLD. The LED will flash if a diagnostic condition has locked out chiller operation that requires manual reset at the chiller (local) CLD. The LED will glow steadily when the control is in "Service Test" mode. This indicates that a service technician is running a service test procedure from the Service Tests menu.

Keyboard use can be locked out at the Service Setup Menu. If all keys are non-functional, contact a Trane service technician.

Note: Use this feature with caution. Locking out the keypad also prevents the operator from stopping chiller operation at the Stop key.

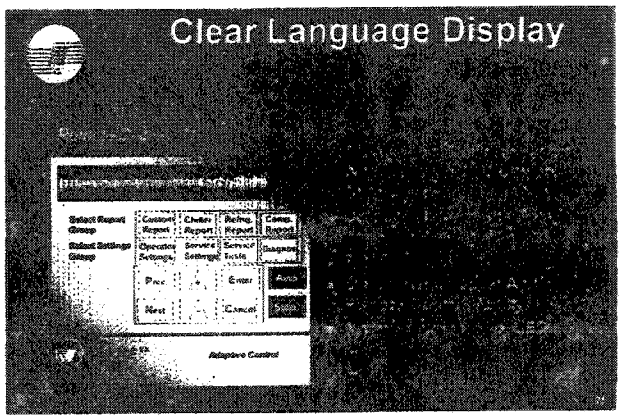

Figure 25

(Figure 25) As mentioned previously, a remote CLD is available that will communicate with and control any UCP2-based chiller by uploading and downloading data from the chiller module. The chiller(s) can be controlled at the local (chiller) CLD or from the remote CLD at any time.

The remote CLD will perform all of the functions of the local CLD except reset of certain latching diagnostics. The remote CLD can be located up to 1,500 feet away from the chiller(s).

All variable information such as temperatures and pressures, are updated on the screen every two seconds while it is being displayed.

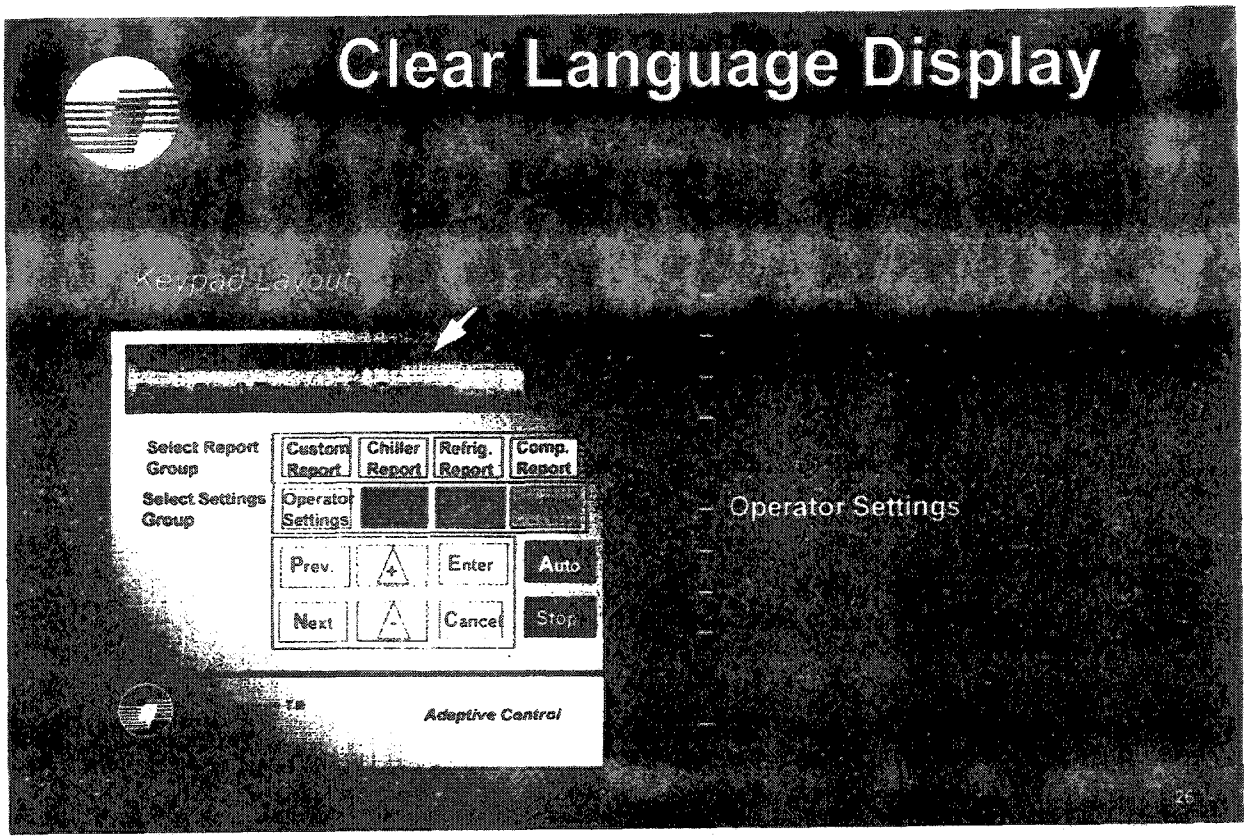

Figure 26

(Figure 26) The CLD displays all chiller operating data and provides access to controls, setpoints and setup and diagnostic information. The keys on the CLD keypad are arranged as follows:

REPORT GROUP KEYS

The top row of four keys are the Report Group Keys. Pressing one of these keys allows the operator or technician to view one of four "reports" available from the UCP2. These reports contain information on chiller operation, system setpoints and control settings. Access to these keys is usually not protected by a password. This allows the viewer to look at the data available but does not allow setpoints or control settings to be changed.

Custom Report Key

The Custom Report contains data that has been specifically selected to appear in this report. It can contain up to twenty items taken from the chiller, refrigerant and compressor reports.

Chiller Report Key

The Chiller Report contains current chiller operating status information, water temperatures and operating setpoints.

Refrigerant Report Key

The Refrigerant Report contains refrigerant-related data, including pressures, temperatures, purge and equipment room refrigerant monitor data.

Compressor Report Key

The Compressor Report contains all available compressor data, including total operating time, number of starts, oil system data, inlet guide vane position (CTV), bearing temperatures (CTV), and electrical data.

SETTINGS GROUP KEYS

The second row of four keys are the Settings Group Keys. Pressing one of these keys allows the operator or technician to not only view, but change chiller operating setpoints, and control and setup settings.

Operator Settings Key

Pressing the Operator Settings key accesses the Operator Settings menu, where the user may view and change operator-level chiller and purge operating setpoints.

Service Settings Key

Pressing the Service Settings key accesses the Service Settings menu where the user may view and change technician-level field setup data and factory chiller configuration settings.

Service Tests Key

Pressing the Service Tests key accesses the Service Tests menu which can be used by a technician to test or override chiller operation to conduct operating tests of certain chiller components.

Diagnostics Key

Pressing the Diagnostics key allows the technician to view a log of historical and active diagnostics and also allows the chiller operator to clear a diagnostic lockout condition and restore normal chiller operation.

DATA CONTROL KEYS

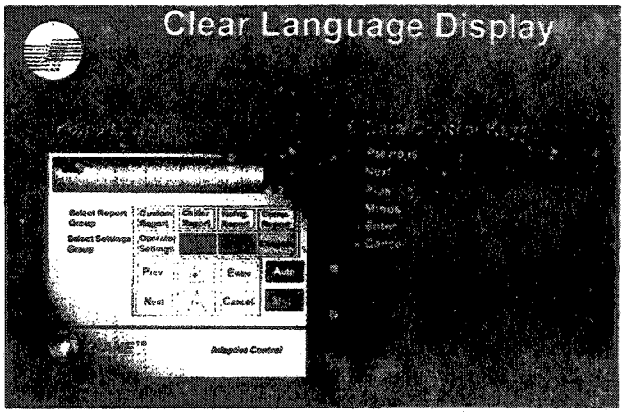

Figure 27

(Figure 27) The six Data Control keys are grouped together in the bottom two rows of the keypad. These keys are the Previous & Next, Plus & Minus and Enter & Cancel keys. They are used to manipulate the information that appears on the CLD screen.

Previous & Next Keys

These keys are used to scroll forward or backward through report items or menus. The screen will wrap back to the top or bottom of the menu when the end or beginning of the group is reached.

Plus & Minus Keys

Use these keys to change setpoints and control settings up (+) or down (-). This can only be done when viewing a "settings" menu where the second line of the screen is "Press (+) (-) to Change Setting".

Enter & Cancel Keys

Use the Enter key to enter a new setpoint or control setting into memory once it has been changed. Enter must be pressed to store any new setting into memory. Press Cancel if a new setting is inadvertently entered but should not be stored into memory. Again, this can only be done when in a "Settings" group or menu.

AUTO KEY

Pressing the AUTO key selects "automatic" chiller operation. This allows the chiller to start on a call for cooling at any time, based on the current differential-to-start setpoint. When in "auto" mode, the chiller stops when cooling load is satisfied. The chilled water pump continues to run, however, and the chiller module monitors leaving chilled water temperature to restart the chiller on a demand for cooling.

STOP KEY

Pressing the STOP key selects "manual" stop of chiller operation. The chiller still goes through its normal shutdown sequence, except that the chilled water pump stops also.

IMPORTANT: Pressing STOP two times within 5 seconds initiates an "emergency stop". The stop sequence is the same as a normal manual stop except that the compressor motor stops immediately and the chiller is not unloaded as it is during the normal stop sequence.

REPORTS

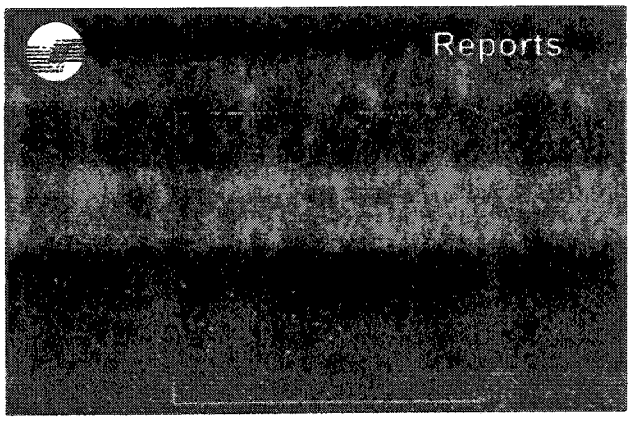

Figure 28

(Figure 28) As discussed previously, reports allow the chiller operator to view chiller operating conditions, settings and setpoints and provides a means of generating a report of selected information. There are four reports available. They are:

Custom Report
Chiller Report
Refrigerant Report
Compressor Report

Each individual point of any report can be viewed at the CLD at any time by pressing the desired report group key and using the Next and Previous keys to scroll through the report items.

The remainder of this manual will discuss the items contained in each of these reports and demonstrate how to access this information using the UCP2 clear language display.

Custom Report

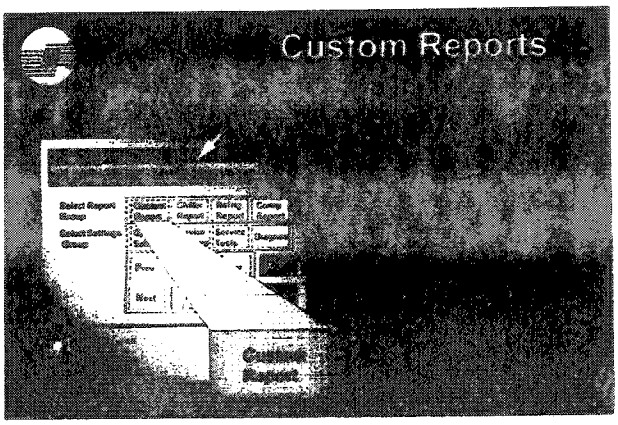

Figure 29

(Figure 29) The chiller operator can create a "Custom Report" by selecting individual points from the Chiller, Refrigerant and Compressor Reports. In this manner, data that is critical to the specific job can be viewed in one menu.

When the Custom Report key is pressed, the report heading will display as shown in Figure 29. If no items have been selected for this report, pressing Next or Previous will display:

"No Items Are Selected For Custom Report - See Operator's Manual to Select Entries"

To add an item to the Custom Report, enter the report that contains the item and using Next or Previous, scroll to the item. While viewing the item, press the (+) key. The item will be added to the Custom Report.

To view the item in the Custom Report, press the Custom Report key and scroll to the item. To remove an item from the Custom Report, view the item in the Custom Report and press the (-) key.

The Custom Report can contain up to 20 items. Use the Next and Previous keys to scroll through the items. If an attempt is made to add a 21st item to the report the display will indicate:

"Custom Report is Full, Report Not Added"

If an attempt is made to add an item already in the report, the display will indicate:

"Report Already in Custom Menu"

Chiller Report

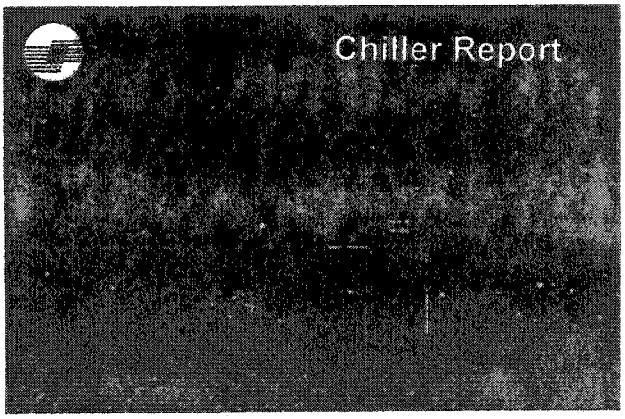

Figure 30

(Figure 30) The chiller report contains chiller operating data and setpoints such as current chiller operating mode and status, water temperatures and operating setpoints.

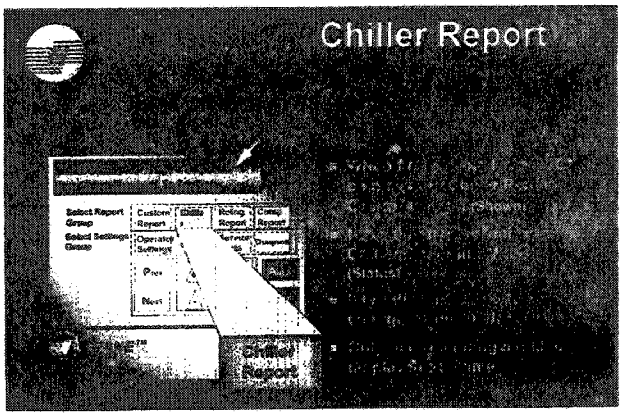

Figure 31

(Figure 31) The operator can view the chiller report by pressing the "Chiller Report" key. This will display the report heading:

"Chiller Status, Wtr Temps & Setpts - Press (Next) (Previous) To Continue"

The next screen will display the chiller operating "Mode" on one or both lines. There are many operating modes available. Examples of operating modes are:

"Auto–
Waiting For Evaporator Water Flow"
- or -
"Unit Is Running – Capacity Limited By High Condenser Pressure"

The operating mode message will indicate if the chiller is stopped, starting, running full load, running inhibited, locked out on a diagnostic condition, in free cooling, waiting for water flows, in hot gas bypass, ice making, shutting down, in extended unloading (RTHB), etc.

Continuing to press the Next key will scroll though the remaining chiller report items; system water temperatures and active chiller operating setpoints.

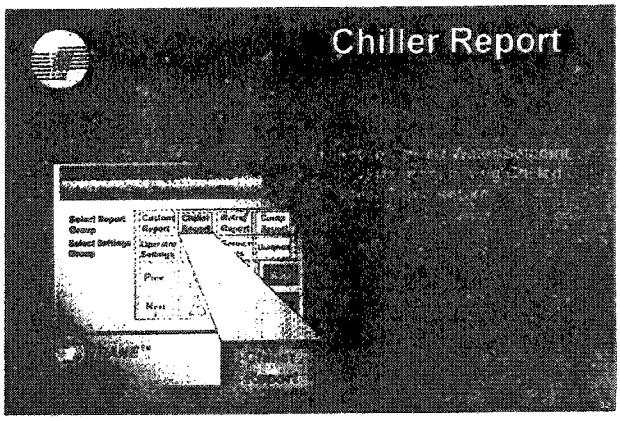

Figure 32

(Figure 32) The bulleted text items that are shown in Figures 32 through 51 are color-coded as follows:

- The items presented as yellow text are standard UCP2 features.
- Items presented as aqua text are options available with UCP2.

Only one of the items in Figure 32 can be displayed, depending upon chiller operating mode. Even if the chiller has one or both of the options (aqua) shown here, only one of these items can be displayed, depending on chiller operating mode.

When the chiller is in normal cooling operation, the "Active Chilled Water Setpoint / Evap. Leaving Water Temp." screen will be displayed. Setpoint temperatures are shown in degrees Fahrenheit or Celsius, depending on whether English or Metric (SI) display units have been selected from the Service Settings menu.

If the chiller is in "ice-making" or "ice-making complete" mode, then the "Active Ice Termination Setpoint / Evaporator Return Water Temperature" display will appear instead of "Active Chilled Water Setpoint / Evap. Leaving Water Temp."

If the chiller is in "Hot Water Control" mode, "Active Hot Water Setpoint / Condenser Entering Water Temperature" is displayed instead of "Active Chilled Water Setpoint / Evap. Leaving Water Temp."

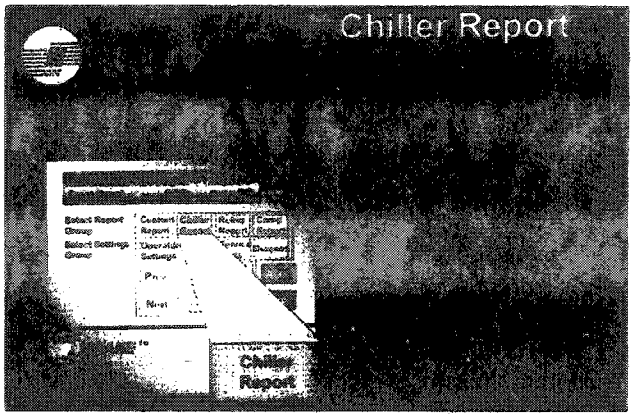

Figure 33

(Figure 33) At this point, the screen will display one of two items, depending upon current chiller operating mode: The active chilled water setpoint (CWS) is displayed on the first line, the setting source and the setting source setpoint on the second line;

or,

The active ice termination setpoint is displayed on the first line, the setting source and the setting source setpoint on the second line.

Possible setting sources for all setpoints are Front Panel, Tracer, Ice Building or External. In the event that the chiller module loses communication with the setpoint source, control will revert to the front panel setpoint.

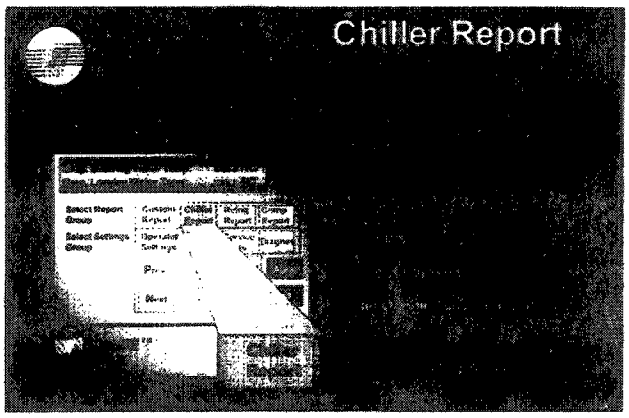

Figure 34

(Figure 34) Entering and leaving water temperature sensors are standard equipment for the UCP2 system. These sensors provide the inputs for the evaporator and condenser temperature differential calculations done by the chiller module.

Next, the CLD will display the active current limit setpoint, as a percentage of full load amps (nameplate). This setpoint indicates the point at which UCP2 will begin to prevent additional compressor loading due to overamperage draw by the compressor motor.

Current limit control is adjustable from 40 to 100 percent of compressor full load amps.

The differential water sensing option must be installed and enabled in order to display water flows and chiller tons. Water flows can be read in gallons per minute (gpm) or in liters per second (lps).

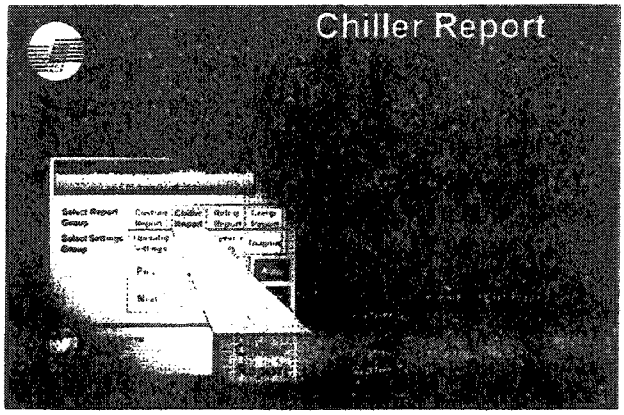

Figure 35

(Figure 35) The first screen in this figure displays the temperature being sensed at the optional outdoor air temperature sensor. The input for this sensor is located on the chiller module. This sensor is included with the Outdoor Based Chilled Water Reset option. This temperature is received by the CLD from the chiller module.

"Aux/Heat Rcvy" entering and leaving water temperatures will be displayed only if a heat recovery chiller is provided or if the chiller is equipped with an auxiliary condenser tube bundle.

The chilled water setpoint source can be a Tracer, the Local CLD or an external Building Management System. If the Tracer or an external source fails, the local CLD assumes control.

"Reset Condition" identifies the type of chilled water reset control being used. This is either outdoor air temperature or return chilled water temperature.

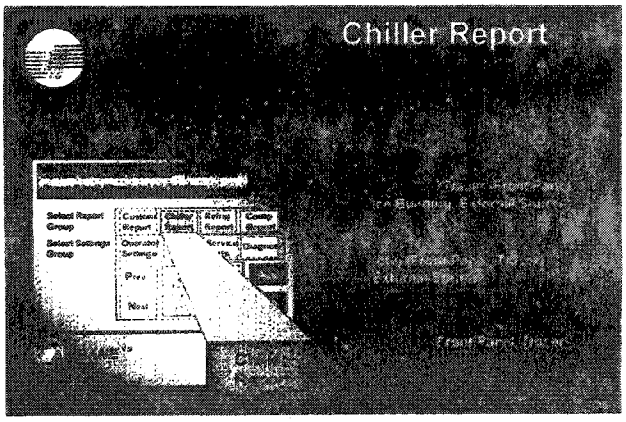

Figure 36

(Figure 36) The Current Limit Setpoint Source screen indicates where the current limiting signal is originating from. The current limit setpoint can originate from several locations or sources. These sources are:

Tracer
Front Panel (Local CLD)
Ice Building
External Source

The Hot Water Setpoint Source is only available on centrifugal chillers. It is displayed only if "Heat Pump Control" is enabled and the chiller is in "Hot Water Control" mode.

Heat Pump Control is used in rare cases where the CenTraVac is used to provide heating instead of cooling as a primary mission.

The Ice Termination Setpoint Source screen indicates where the signal to stop ice building is coming from. This signal can originate from a Tracer or the Chiller Front Panel (CLD).

Refrigerant Report

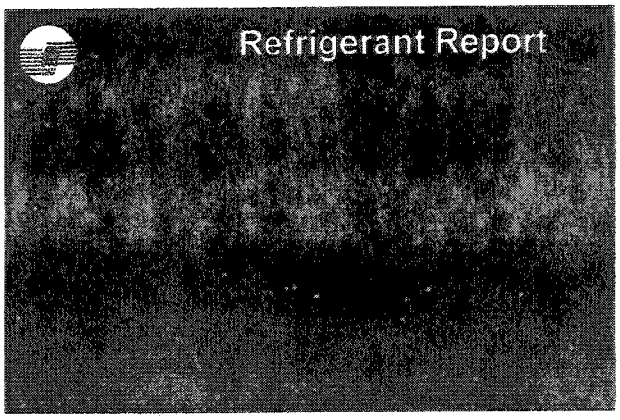

Figure 37

(Figure 37) The refrigerant report contains refrigerant-related information such as pressures, temperatures, purge operating data and equipment room refrigerant monitor log data.

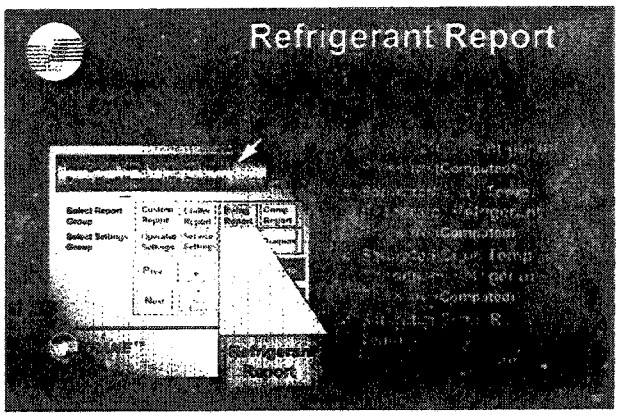

Figure 38

(Figure 38) The operator can view the refrigerant report by pressing the "Refrigerant Report " key on the CLD. This will display the report heading:

"Refrigerant Temp & Pressure Report-
Press (Next) (Previous) To Continue"

The next screens will display two report items each, one on each line. The first screen is:

"Evap. Rfgt Pressure: xxx.x psig-
Cond. Rfgt Pressure: xxx.x psig"

Refrigerant temperatures are provided by the factory-installed temperature sensors. Compressor discharge temperature sensing is standard on RTHB units because electronic expansion valve (EXV) control is derived from a combination of discharge superheat and chilled water temperature differential readings.

Continuing to press the Next key will scroll through the remaining refrigerant report items.

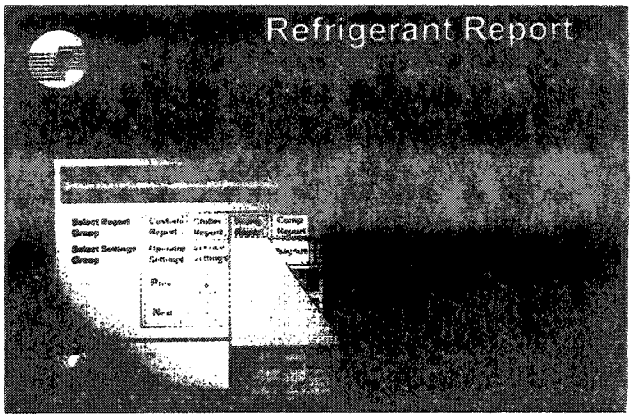

Figure 39

(Figure 39) The three items shown in this figure are displayed for RTHB chillers only, since these features are not provided on low pressure centrifugal chillers. The first screen compares the compressor discharge temperature with the available superheat available at that time.

Discharge superheat is computed from the compressor discharge temperature reading and the saturated condenser refrigerant temperature. Superheat is used to control electronic expansion valve operation to try to maintain the discharge superheat control point.

The second screen shows the discharge superheat control setpoint and the amount of superheat at that moment. The chiller should maintain superheat near the control point. If superheat is too high or too low for too long, the chiller will lock out on a latching diagnostic condition.

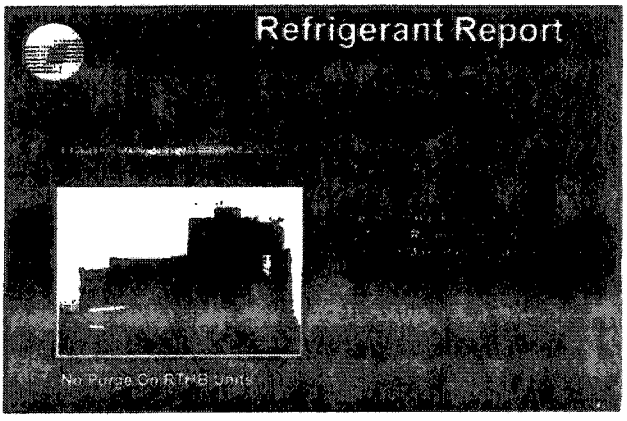

Figure 40

(Figure 40) The next message that appears on the CLD of a low pressure centrifugal chiller is the Purge Operating Mode screen shown here. The first line displays Purge Operating mode, the second is Purge Status. Operating mode is an adjustable setting, while status is just a condition report.

The next 12 screens following the Purge Operating Mode screen are purge-related. These screens are a report-only function that show how the purge is set to operate at this time and what it is actually doing. You cannot set the purge operating parameters in the Refrigerant Report; you can only view the existing purge operating status and settings.

The four purge operating modes are:

Stop
On
Auto
Adaptive

Purge operation mode is selected in the Operator Settings Group.

There are six possible purge status conditions. They are:

Idle
Running
Pumpout
Service Pumpout
Running Inhibited
Pumpout Maximum Rate Inhibited

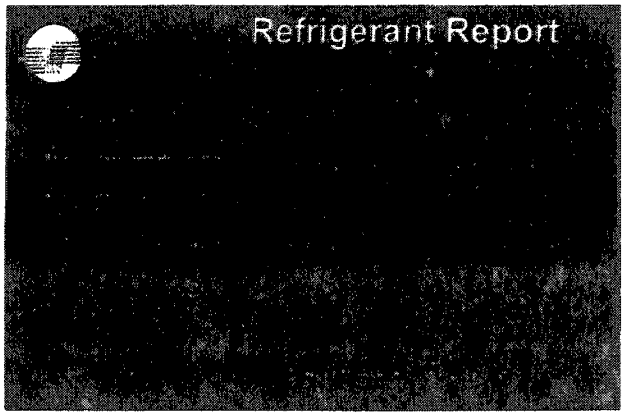

Figure 41

(Figure 41) The Purge Alarm Message screen is provided to inform the operator if non-latching purge diagnostics are occurring. The screen will look like one of the two shown here. The No Diagnostics Exist screen indicates there are no purge diagnostics stored in the diagnostic log at this time. A latching purge diagnostic will cause the purge to shut down and a warning screen to appear on the CLD. This automatically sends the display to the Diagnostic Settings menu so the fault can be viewed and cleared.

Purge Suction Temperature is the suction temperature of the purge air-cooled condensing circuit compressor. This temperature controls pumpout compressor operation, turning it on at 18 F and off at 22 F.

Chiller saturated condenser temperature (purge liquid temperature) is measured so that it can be used to prevent purge operation if the temperature is too low in the chiller condenser.

The top line of the Purge Pumpout Rate screen indicates how many minutes during the last 24 hours the purge pumpout compressor has operated. The maximum number of minutes per day for pumpout is set when the chiller is installed. The second line of this screen shows what the maximum setting is at this time.

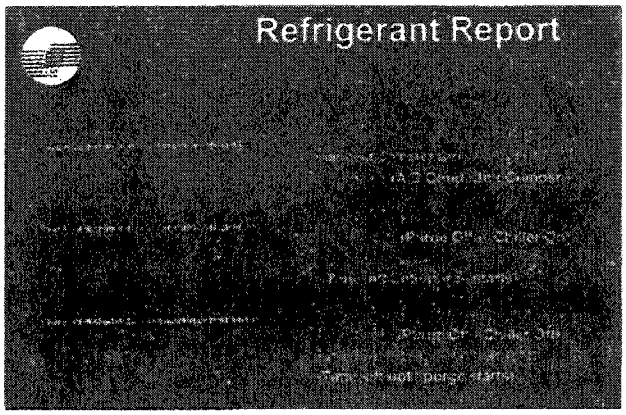

Figure 42

(Figure 42) The Purge Total Pumpout and Run Time screens provide information about the two purge compressors.

Purge Total Pumpout Time is a log of the total number of minutes that the pumpout compressor has operated during the life of the purge. Purge Total Run Time is a log of the total number of minutes that the air-cooled condensing compressor has operated during the life of the purge.

The Adaptive Cycle Time - Chiller On screen shows the length of the purge OFF cycle being used by the Adaptive Control mode with the chiller running and the amount of time left until the purge will restart.

The Adaptive Cycle Time - Chiller Off screen indicates the length of the purge OFF cycle being used by the Adaptive Control mode when the chiller is not running and the amount of time left until the purge will restart.

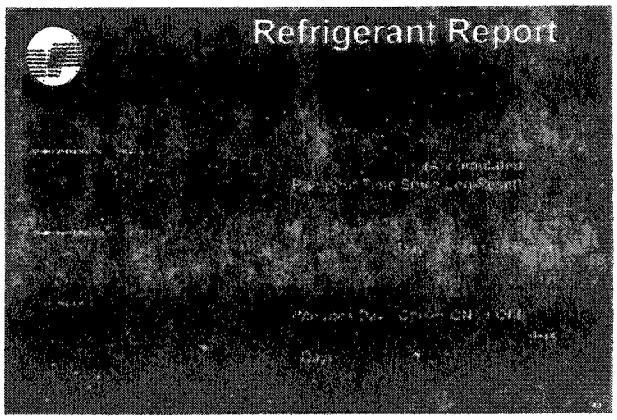

Figure 43

(Figure 43) The Purge Service Log is provided to help schedule purge service and maintenance procedures. The time on these two screens can be reset (zeroed) at any time from the Field Startup menu.

The first service log screen gives pumpout time accumulated since the log was last reset. This should be reset at the completion of purge service to help schedule service or maintenance based on pumpout time.

The second service log screen gives the number of days accumulated since the log was last reset. This should be reset at the completion of purge service to help schedule service or maintenance based on elapsed time or calendar days.

30-Day Summary Data

The last four purge-related screens show data that is accumulated over the previous 30-day period which is called 30-day summary data. Adaptive Control uses this data to automatically adjust purge operational settings.

The first of these is the 30-Day Purge Pumpout Average screen. This shows the average pumpout activity for each 24 hour period over the last 30 days and the Chiller Average Run Time screen which is a summation of chiller run time in hours divided by the number of days of available data.

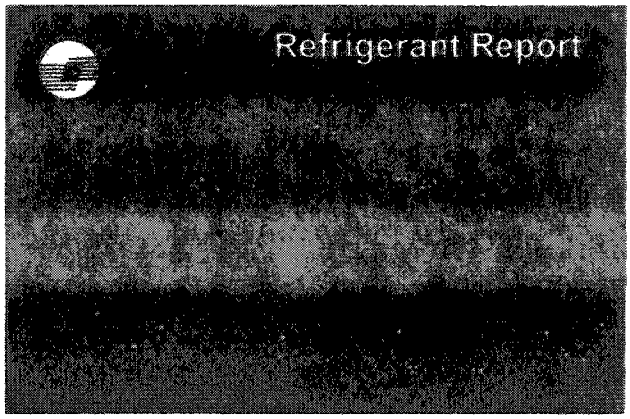

Figure 44

(Figure 44) The next 30-day summary screen is the 30 Day Pumpout Average - Chiller Running screen. This summary records all accumulated pumpout time for periods when the chiller is running. Large service pumpouts are not included if they occurred more than 7 days in the past.

Last 5 Cycle Pumpout Average, Interval From Shutdown To 3 Hours After Shutdown is a screen that gives the average pumpout time needed during the last five chiller shutdowns. Data is available for the last 30 calendar days of pumpout activity during the first 3 hours following chiller shutdown. Large service pumpouts are included. From this data, the average for the last 5 shutdown cycles is computed and shown on this screen.

The final purge screen in the chiller report is the 30 Day Pumpout Average, Interval From 3 Hours After Shutdown To Next Start screen. This summary includes all pumpout data for extended chiller shutdowns (beyond the 3 hour period covered above). Large service pumpouts are not included if they occurred more than 7 days in the past.

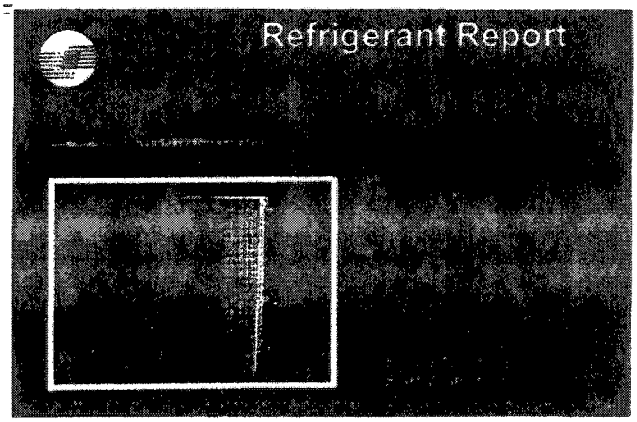

Figure 45

(Figure 45) The refrigerant monitor screens (CTV or RTHB) indicate the current equipment room refrigerant vapor concentration level reading (in parts-per-million), being taken by the refrigerant monitor. This screen will appear only if the refrigerant monitor option has been enabled from the Field Setup menu.

ASHRAE STD. 15-1992 is the current standard that specifies how equipment rooms should be laid out and ventilated and how the refrigerant systems in them should be piped and what safety devices should be provided. At the minimum, an oxygen deficiency monitor should be provided and a refrigerant monitor is recommended.

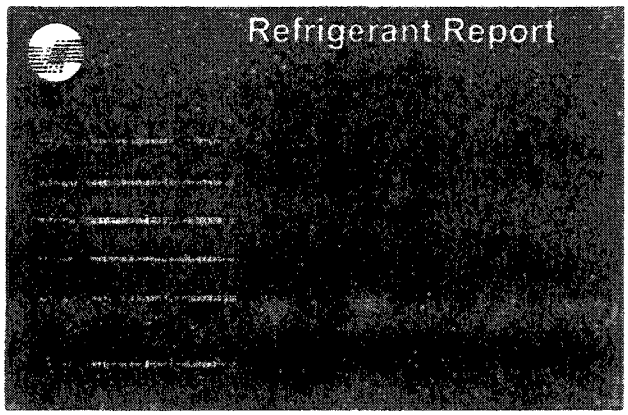

Figure 46

(Figure 46) The Trane Model RMWD digital refrigerant monitor provides more information to the operator than the older, analog monitor does. In addition to equipment room refrigerant vapor level readings, the RMWD shows the monitor's operating mode, case temperature, "bench" temperature and indicates the refrigerant type being read on the chiller's UCP2 display.

The display also indicates the current signal level (mA) being sent to the monitor auxiliary input. This monitor is also available mounted right on the chiller.

If a multiple channel refrigerant scanner is also provided, the display indicates which channel is currently being read and displays the last vapor level reading for each channel.

The monitor's auxiliary input can be used to accept a signal from an external device such as a oxygen level monitor.

The final screen in the CenTraVac Refrigerant Report displays the evaporator and condenser approach temperature readings (not used for RTHB). They are important chiller operating and diagnostic tools.

Compressor Report

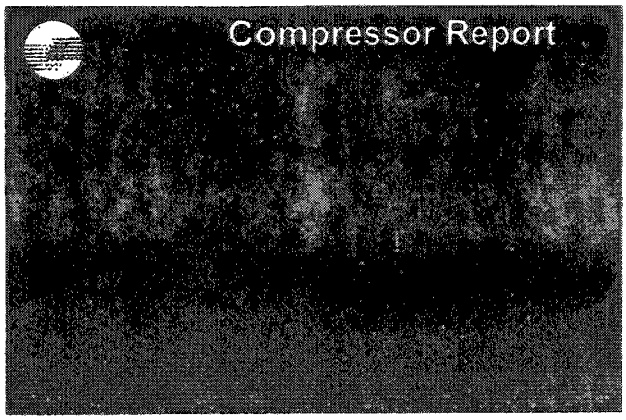

Figure 47

(Figure 47) The Compressor Report is the final Report Group. This report provides information on compressor operation, including oil system data, bearing information (CTV), inlet guide vane position (CTV), operating time and starts, electrical data and operating temperatures.

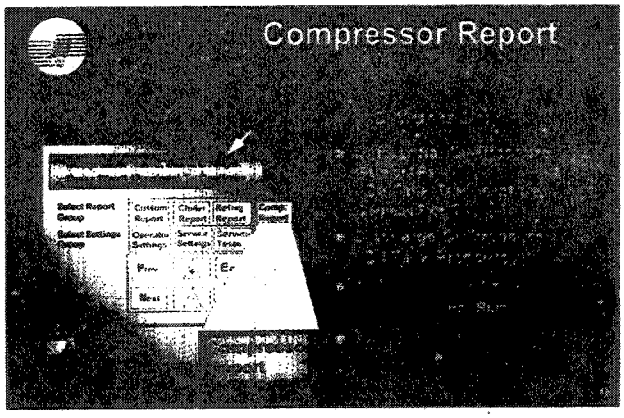

Figure 48

(Figure 48) When the Compressor Report key is pressed, the Compressor Report heading, shown in this figure will be displayed. Pressing Next will scroll through the report items that follow.

The first six compressor report screens shown here appear for CVHE and CVHF chillers only. The RTHB compressor report begins with the "Compressor Phase Currents - % RLA screen shown in Figure 49.

The Differential (Net) Oil Pressure reading is provided to assure the operator that oil is being supplied properly to the compressor bearings. This reading is equivalent to subtracting evaporator pressure from the oil supply pressure.

Normal operating Differential Oil Pressure reading is 12-18 psid. A minimum of 9 psid for 30 seconds is required for compressor start to take place. The 750-watt oil tank heater should maintain 140-145 F oil temperature during chiller operation. Oil tank temperature can be anywhere between 115-160 F with the chiller OFF.

The discharge oil and oil tank pressure screens show what oil pressure readings are being used to calculate the differential oil pressure.

The Adjustable Frequency Compressor Speed Command screen displays the compressor speed frequency and rpm for CVHE and CVHF only if the starter type is set at "adjustable frequency".

The Adjustable Frequency Boundary Pressure Coefficient and the Adjustable Frequency Pressure Coefficient are displayed for CVHE and CVHF only if the starter type is set at "adjustable frequency".

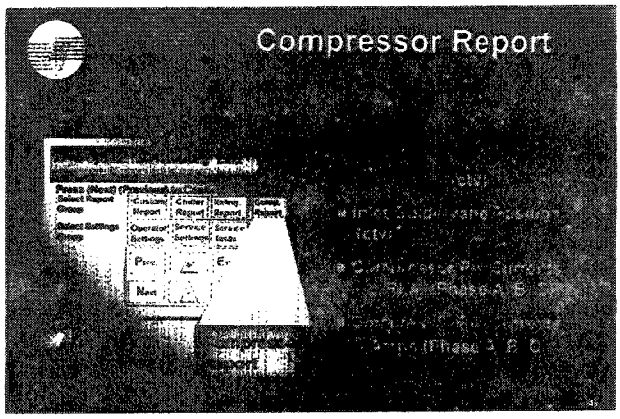

Figure 49

(Figure 49) The Adjustable Frequency Re-Optimization Time Remaining screen displays the amount of time left on the re-optimization timer. This is displayed for CVHE and CVHF only if the starter type is set at "adjustable frequency".

The Inlet Guide Vane Position screen shows the CVHE/F inlet guide vane position at any given time. Position is displayed in percent of full open and number of degrees open, based on inlet guide vane stepper motor position.

"Compressor Phase Currents – % RLA" is the percentage of Rated Load Amps (nameplate) being drawn at each compressor winding. "Compressor Phase Currents – Amps" is the total amperage being drawn at each compressor winding.

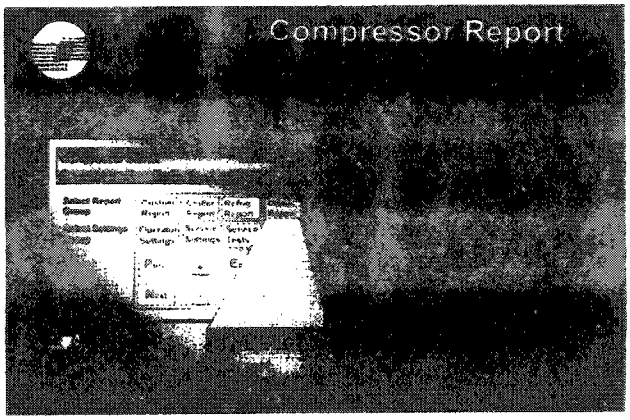

Figure 50

(Figure 50) "Compressor Phase Voltages" is the measured voltage present between Line Phases A-B, B-C and C-A respectively, of the incoming power supply.

"Compressor Power Factor" and "Compressor Kilo-Watts" readouts are options available for centrifugal chillers if:

- the Line Voltage Sensing Option (PTs) is installed;
- the starter type is not Adjustable Frequency Drive, and;
- "External KW" is not installed.

A RTD-type temperature sensor (W1, W2, W3) is buried in each phase winding of the compressor motor stator to detect motor overheating. The UPC2 monitors the resistance measured at each of the sensors, which varies in direct relation to the motor temperature.

A counter is provided to record the total number of compressor starts since chiller first startup. A digital hourmeter records total compressor run time since first chiller startup in hours, minutes and seconds.

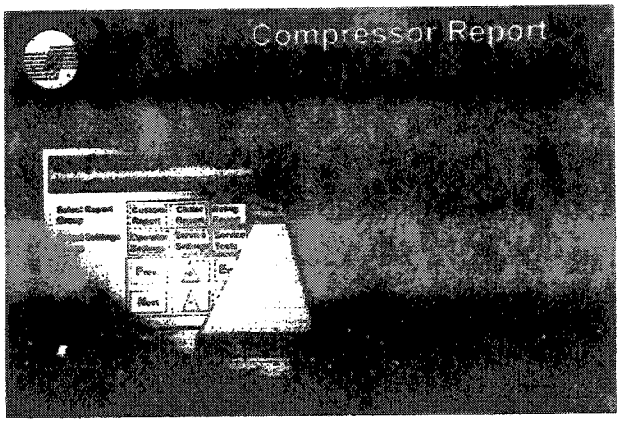

Figure 51

(Figure 51) Inboard and outboard bearing temperature protection is optional on CVHE/F centrifugal chillers. Fixed, high bearing temperature cutouts can be provided to generate a MMR diagnostic and shut down the chiller if temperature at either bearing exceeds 180 F (82.2 C).

Solid State Starter Heat Sink Temperature is displayed if the solid state starter option has been enabled from the Service Settings menus. UCP2 monitors this temperature to prevent chiller start when the starter heat sink temperature is too high.

Hot Gas Bypass Time is a readout of the total amount of time elapsed with chiller operating in hot gas bypass.

Extended Unloading Time indicates the total amount of time currently being allowed for an RTHB unit to operate in "extended unloading" condition. This is used to keep the chiller on line at minimum load by creating an artificial load on the evaporator (similar to hot gas bypass). When chilled water temperature differential falls to its lowest allowed point, UCP2 opens the EXV slightly, to allow more refrigerant to enter the evaporator.

SUMMARY

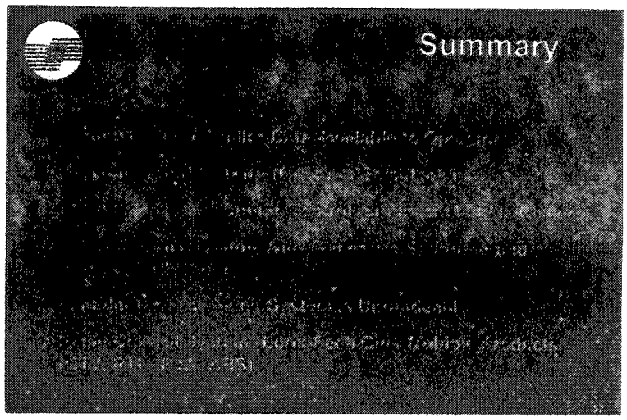

Figure 52

(Figure 52) The Trane UCP2 Enhanced Adaptive Control™ system provides chiller operating and maintenance personnel immediate access to all chiller operating status and setpoint data, pressure and temperature readings, electrical data, loading conditions, oil system information, and purge and refrigerant monitor data.

An operator can access critical information immediately by setting up a custom report for his particular application.

Chiller logs can be printed on demand, periodically, or in the instance of a diagnostic.

Multiple or single UCP2 chillers can be controlled remotely, using the Remote Clear Language Display and, all UCP2 chillers communicate directly with Tracer building management systems.

The UCP2 is so flexible that new features can be added to it at any time.

Finally, once an operator is familiar with UPC2 operation this familiarity will carry over to any other type of chiller using Trane's Adaptive Control technology.

The Trane Company
North American Commercial Group
3600 Pammel Creek Road
La Crosse, WI 54601-7599

An American-Standard Company

Since the Trane Company has a policy of continuous product improvement, it reserves the right to change design and specifications without notice.

Library	**E/AV**
Product Section	**ST**
Product	**CTV**
Model	**000**
Literature Type	**MNL**
Sequence	**4**
Date	**5/94**
File No.	**E/AV-ST-CTV-000-MNL4-594**
Supersedes	**New**
Ordering No.	**ST-MNL-4**

Price: $5.00

TRANE

UCP2 – The Operator's Perspective

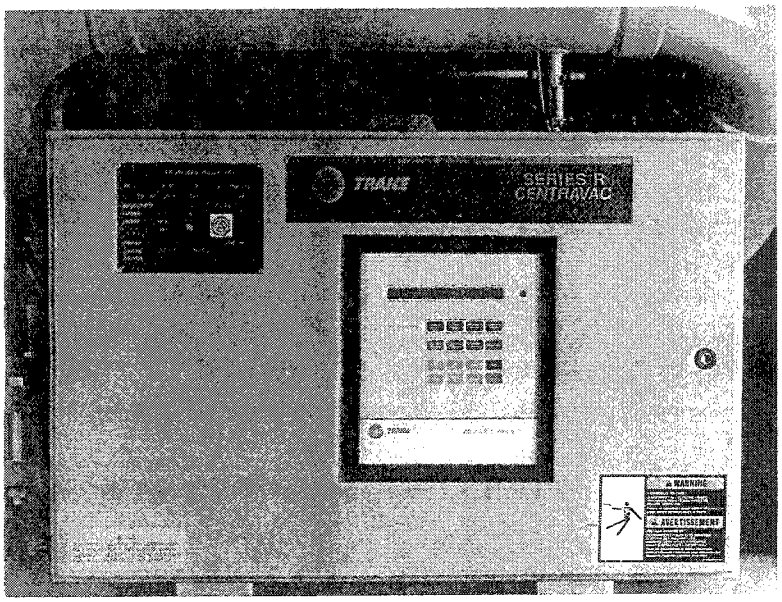

Technical Training
Student Handbook

ST-MNL-5

©American Standard Inc. 1995

CONTENTS

INTRODUCTION 4

SETTINGS GROUP KEYS 5
Operator Settings 5
Service Settings 12
Service Tests 17
Diagnostics 17

MENU SECURITY REVIEW 19

OPERATING WITH UCP2 20
Power-Up Sequence 20
Auto Key 21
Chiller Operating Sequence 21
Stop Sequence 23
Chiller Logging 24
Diagnostic Shutdown Recovery 25
Remote CLD 26

SUMMARY 27

This manual is a companion to the Trane seminar of the same name. To order additional copies of this manual, contact:

Service Literature Department
The Trane Company
3600 Pammel Creek Road
La Crosse, WI 54601

Please specify literature order number ST-MNL-5.

The following related material is also available through Trane Service Literature:

ST-MNL-4 "UCP2 – A First Look"

The Trane Company, La Crosse, Wisconsin 54601-7599

INTRODUCTION

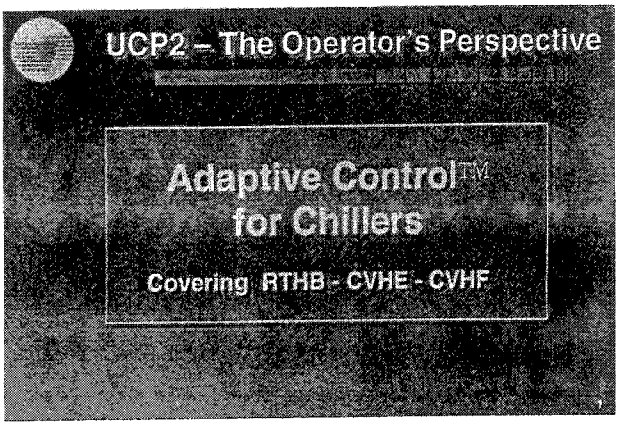

Figure 1

(Figure 1) This course is a continuation of the material contained in the companion training module to this one, ST-LG-4; "UCP2 – A First Look".

ST-LG-4 introduced the UCP2 and covered the clear language display's four report functions. This course picks up at that point, continuing with the UCP settings functions and concluding by discussing basic chiller operation using the control.

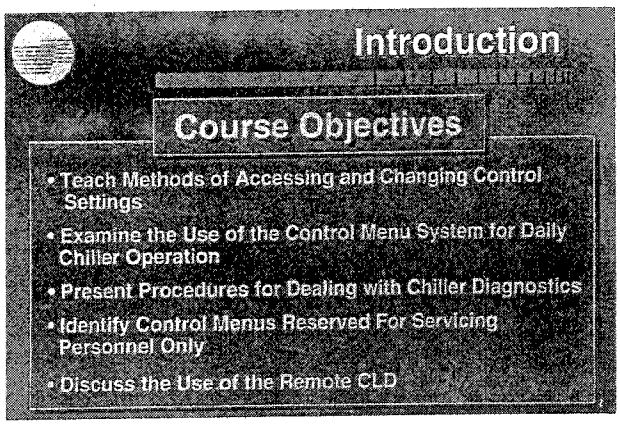

Figure 2

(Figure 2) The Adaptive Control™ System is presently available on these Trane products:

- Model CVHE 230-1250 ton CenTraVac® (3-stage centrifugal chillers)
- Model CVHF 650-1250 ton CenTraVac (2-stage centrifugal chillers)
- Model RTHB 130-450 ton Series R® CenTraVac (helical-rotary chillers)
- Model ABSC Absorber (single-stage absorption chillers)
- Model ABTE Absorber (2-stage absorption chillers)

This manual covers model CVHE and CVHF centrifugal and RTHB helical-rotary chillers equipped with Trane's UCP2 microprocessor control panel.

The manual will show how to use the control's menu system for daily chiller operation and how to deal with machine diagnostics and restore chiller operation. By studying this manual, the reader should learn how to access and use UCP2 control settings and become familiar with which ones chiller operating personnel would typically be expected to understand and set or change.

Finally, the reader will learn what control menus are reserved for service technician use and how to protect the chiller controls from unauthorized access.

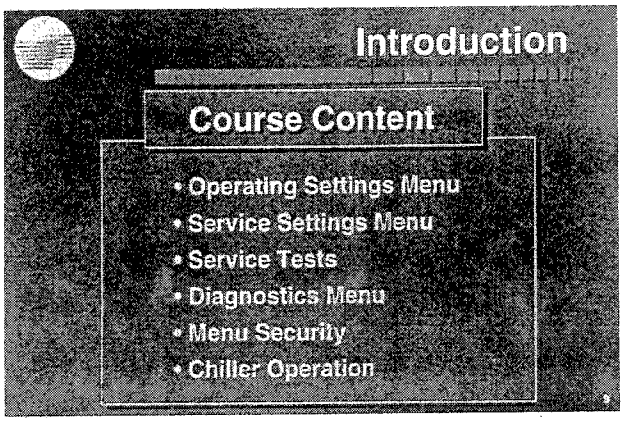

Figure 3

(Figure 3) With this course, we will continue discussion of the UCP2 clear language display. We begin with the four menus of the Settings Group, which are:

Operator Settings menu
Service Settings menu
Service Tests menu, and;
Diagnostics menu

We will also look at the UCP2 control system security measures. The course concludes with coverage of the UCP power-up and operational sequences, a discussion of chiller logging procedures, diagnostic handling routines and remote clear language display (CLD) operation.

SETTINGS GROUP KEYS

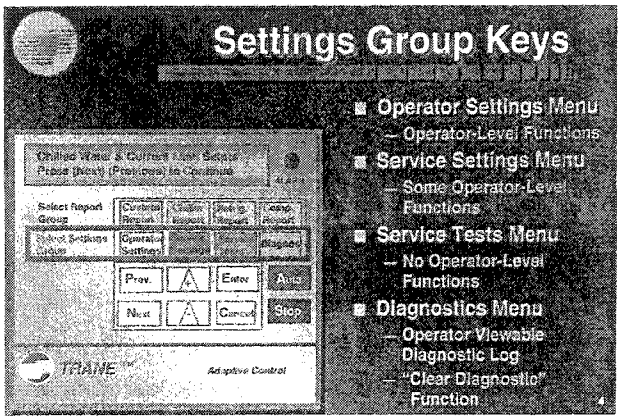

Figure 4

(Figure 4) As previously mentioned, the second row of four keys on the CLD is the settings group keys. They are used to access four menus of machine and system settings. They are:

Operator Settings Menu: It contains the majority of operator-level functions; no machine safety setpoints.

Service Settings Menu: Only the "Basic Setups" or top level settings of this menu are typically used by operating personnel.

Service Tests Menu: Use of this menu is reserved for qualified service technicians.

Diagnostics Menu: Operator views diagnostics log and clears diagnostics preventing chiller operation.

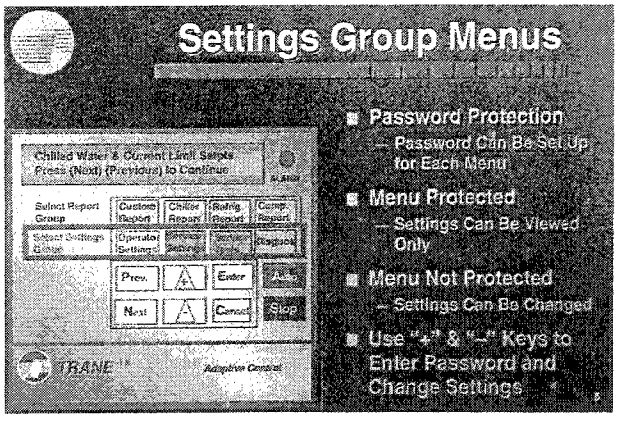

Figure 5

(Figure 5) Passwords can be set up for each menu. If menus are password protected, menu items can be viewed only, not changed. If menus are not protected, items can be both viewed and changed. Use the Previous and Next keys to scroll through menus. Use (+) and (–) keys to change settings. Use Enter key to enter changes into memory after each menu change.

Operator Settings

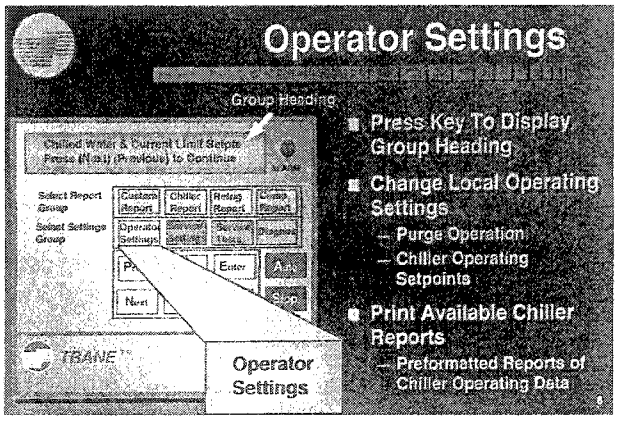

Figure 6

(Figure 6) Pressing the Operator Settings key displays the Operator Settings group or menu heading. If the group (menu) heading does not appear, the headings have been disabled. They can be restored from the Basic Setups area of the Service Settings menu.

Operator settings are used to set local chiller operating parameters and control purge operation (for CHVE/F units). The Operator Settings menu allows the operator to output the available printed reports also. Press Next to continue to the Menu Settings Password screen.

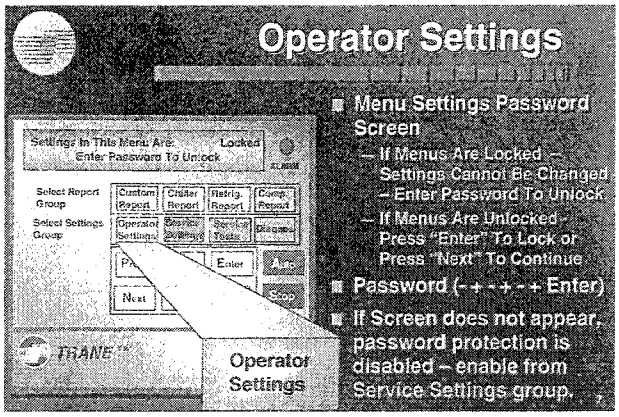

Figure 7

(Figure 7) This screen indicates that the settings in the menu are either locked or unlocked and displays the correct password on the second line for operator convenience. If settings are locked, the operator can unlock them by entering the Menu Settings password. The password is (– + – + – +) followed by Enter.

If the settings are already unlocked, then the operator can change the settings in this menu. Alternately, at this time, the operator can choose to lock the settings in this menu by pressing Enter or can continue on to the next screen by pressing Next.

Note: Any time you are entering a password with the (+) and (–) keys, up to 20 characters can be entered. The CLD uses the last six characters entered as the password, so in this case, the last six characters must be (– + – + – +) followed by the Enter key. So, up to 14 "nonsense" characters could be entered before keying in the correct password. If too many characters or an incorrect password are entered, the CLD will display "Incorrect Password".

If the screen in Figure 7 does not appear, then the menu settings display feature has been disabled from Field Startup menu of the Service Settings Group.

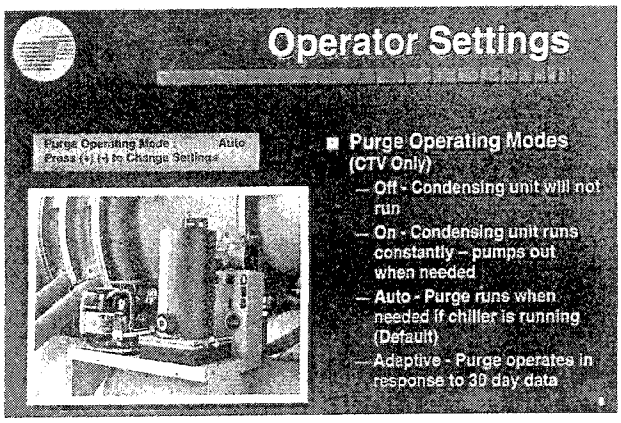

Figure 8

(Figure 8) This screen will not appear if "Stand Alone Purge" type has been selected from the Machine Configuration menu. The purge operating mode screen allows the operator to set one of the four purge operating modes. These modes are:

Off (Stop)

– Purge condensing unit will not operate.

On

– Purge condensing unit runs continuously. Pumpout compressor runs when needed to purge chiller.

Auto

– Condensing unit runs whenever needed if the chiller is running. This is the factory default setting.

Adaptive

– Purge operates in response to 30 day purge data accumulated from past operation.

Use the Plus / Minus keys to change operating modes. This can only be done when In "Settings" groups; the second line of this screen will be "Press (+) (-) to Change Setting".

Use the Enter/Cancel keys to enter new data into memory. Enter must be pressed to store any new setting in memory. If the menu is scrolled to the next item, without pressing Enter, the setting will be lost.

Use cancel if a new setting has been entered but should not be stored. This can only be done when in "Settings" groups. Remember, settings or sensed data are updated on the screen every 2 seconds.

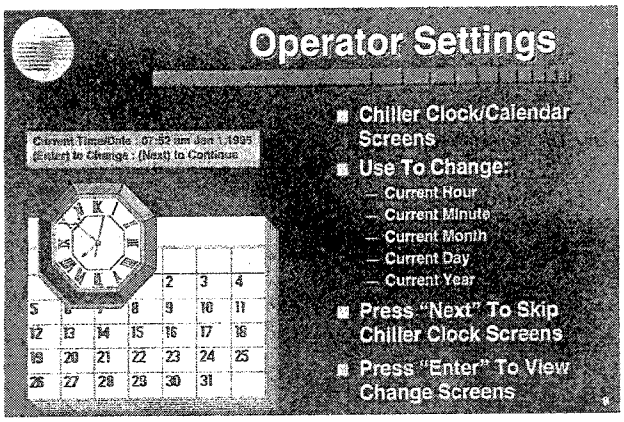

Figure 9

(Figure 9) The chiller Clock / Calendar screens are used to set the proper time and date on the chiller clock. It's important to have the correct time and date set on the chiller clock in order to perform time-related functions, print on time intervals and properly label printed reports.

When the Current Time / Date screen appears, the operator can choose to enter the screens that change the clock / calendar settings or not. To view these screens, press Enter. To skip the clock / calendar change screens, press Next.

When power is removed from the UCP, the clock does not continue to keep time. When the UCP is repowered, a Check Clock screen will display to remind the operator to reset the chiller clock.

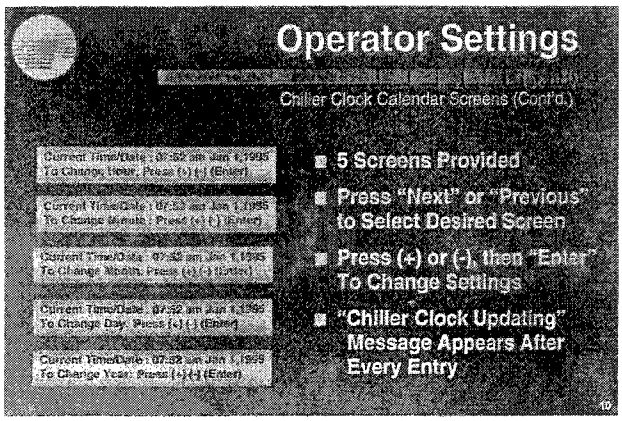

Figure 10

(Figure 10) There are five chiller clock settings screens.

Change Hour
Change Minute
Change Month
Change Day
Change Year

Press Next or Previous to scroll through the screens. Press (+) or (–), then Enter to change the value (remember, Enter must be pressed after each individual change). The Chiller Clock Updating screen will appear momentarily each time Enter is pressed.

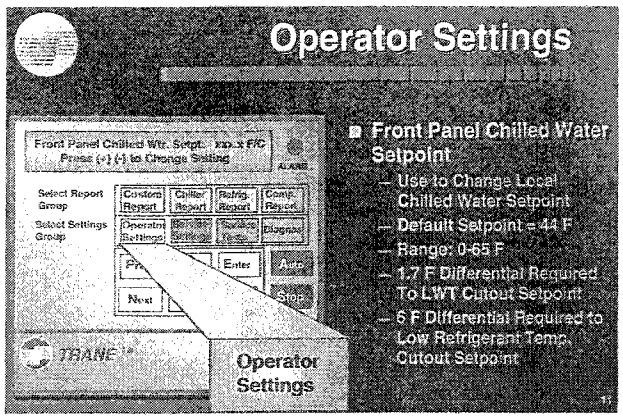

Figure 11

(Figure 11) The Front Panel Chilled Water Setpoint (CWS) is the primary chiller operating point. Press (+) or (–) to change displayed setpoint up or down (in degrees F or C). The programmed factory default setpoint is 44 F. The setting range is from 0 to 65 F.

It is necessary to maintain at least a 1.7 F differential between the CWS and the low water temperature cutout setting and a 6 F differential to the low refrigerant temperature cutout setting. When the Front Panel Chilled water Setpoint is within 1.7 F of the leaving water temperature cutout setpoint, or within 6 F of the low refrigerant temperature cutout setpoint, the second line of the display will read:

"Limited by Cutout Setpoint
Press (+) to Continue"

Plus / Minus Keys

Use to change all setpoints up (+) or down (–). This can only be done when in "Settings" groups. The second line of each screen in a settings menu will be "Press (+) (–) to Change Setting".

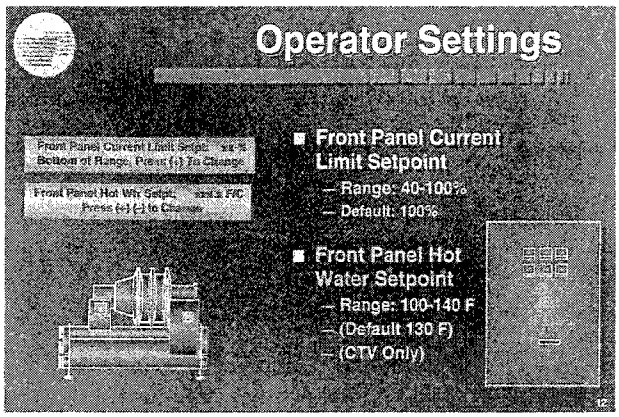

Figure 12

(Figure 12) The Current Limit Setpoint (CWS) is the point at which it is necessary to limit compressor loading because the compressor motor is drawing excessive amperage. This setpoint is set as a percentage of chiller nameplate full load amps (FLA). Press (+) or (–) to change displayed setpoint up or down (in degrees F or C). The factory default setpoint is 100%. Setting range is 40 to 100%.

If you try to establish a setpoint above or below the possible range, one of these two messages is displayed on the second line of the screen:

"Top of Range, Press (–) to Advance"
or;
"Bottom of Range, Press (+) to Continue"

When the chiller is in Hot Water Temperature Control operating mode, the hot water setpoint is the primary operating control point. This is used when heating (not cooling) is the primary mission of the chiller (rare application). In this situation, the UCP controls off leaving condenser water temperature instead of evaporator leaving water temperature.

Press (+) or (–) to change displayed setpoint up or down (in degrees F or C). The factory default setpoint is 100%. The setting range is 100 to 140 F.

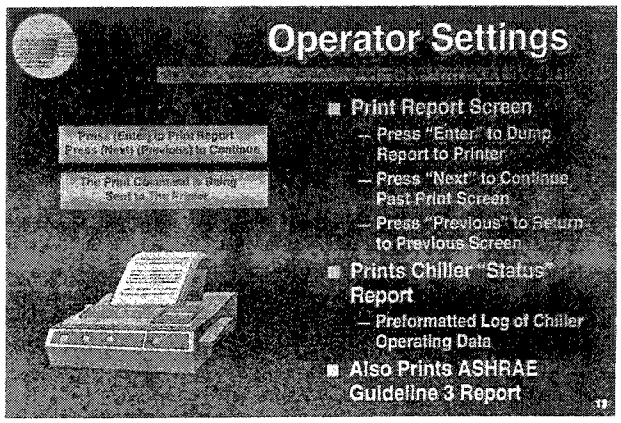

Figure 13

(Figure 13) The Print Report screen gives the operator the opportunity print out a chiller status or ASHRAE Guideline 3 report on demand. These reports can be printed on demand regardless of whether the UCP is configured to print reports at certain time intervals or on a diagnostic, too. To print reports, just press Enter. The Print Report Being Sent screen appears momentarily.

The chiller status report is a preformatted report of chiller data. The ASHRAE Guideline 3 report is a compilation of data from various UCP2 reports that ASHRAE recommends be monitored and logged daily to prevent refrigerant loss. Items in this report can be viewed at the second screen of the Chiller Report. This report is not found on earlier-model UCP2 panels. This is discussed again later in this manual.

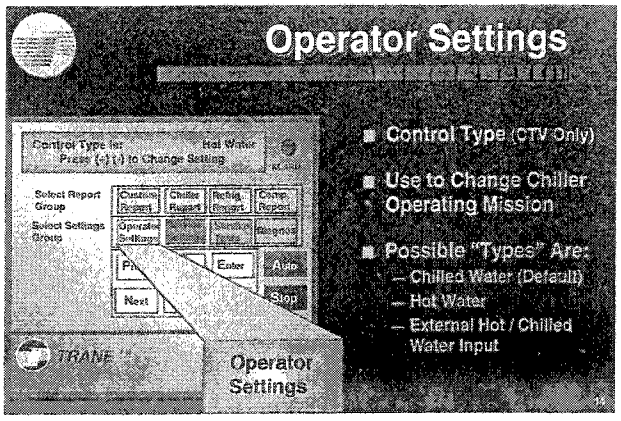

Figure 14

(Figure 14) This screen is used to switch the chiller operating control mode between chilled water control and hot water control. When the chiller is in Hot Water Temperature Control operating mode, the hot water setpoint is the primary operating control point.

This is used when heating (not cooling) is the primary mission of the chiller (rare application). The UCP controls off leaving condenser water temperature instead of evaporator leaving water temperature.

This screen will not appear unless this feature was installed from the Machine Configuration menu of the Service Settings group. The External Hot / Chilled Water Input is provided in the case where is it desirable to be able to switch between producing cold water and producing hot water from a Tracer location.

In this type of application the leaving evaporator water temperature is allowed to drift wherever it needs to be to satisfy the condenser heating load. The evaporator is normally piped into a lake, well or other source of constant temperature water for the purpose of extracting heat from it.

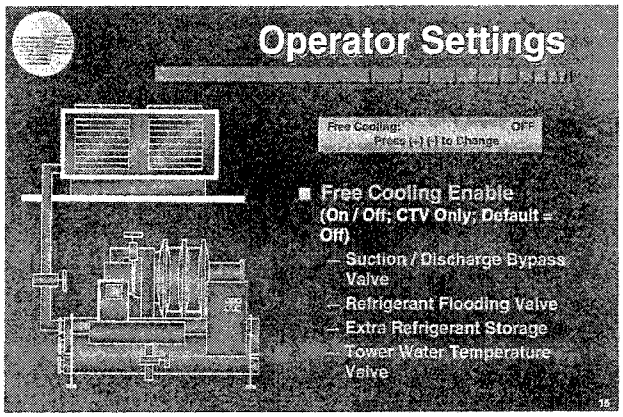

Figure 15

(Figure 15) This screen allows the operator to manually switch between normal powered cooling operation and free cooling. This can also be done automatically from a binary input on the options module or from a Tracer or Chiller Plant Manger (CPM).

Note: Free cooling has to be installed from the Machine Configuration menu of the Service Settings group.

Free cooling is a method to obtain up to 45% cooling without the running the compressor. In order to do this, first there must be a source of condensing water whose temperature is lower than the required chilled water temperature setpoint (i.e., you have an indoor load with low ambient outside air condition).

Free cooling requires a number of factory modifications to the chiller, including; installing a refrigerant gas line and liquid return line with automatic valves between evaporator and condenser, adding a liquid refrigerant storage vessel and providing extra refrigerant.

During free cooling, the water pumps operate and refrigerant circulates between the evaporator and condenser due to the pressure/temperature differential between them. The amount of cooling obtained depends on the magnitude of this differential. When the cooling load exceeds free cooling capacity or low temperature condenser water is no longer available, the operator manually switches back to normal cooling or this is done automatically via the input on the options module, a Tracer or Chiller Plant Manger (CPM).

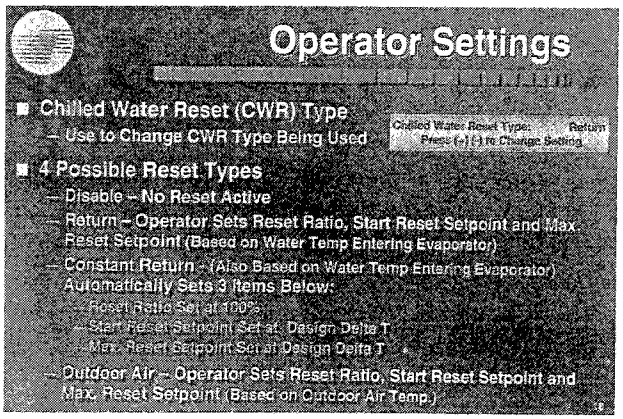

Figure 16

(Figure 16) Chilled water reset (CWR) is a means of reducing energy consumption during periods of the year when cooling loads are reduced. By resetting the chilled water setpoint upward as cooling load falls off, the chiller can satisfy the setpoint at lower load conditions, reducing electrical power consumption.

This screen allows the operator to select the type of chilled water reset to use or to disable reset altogether. The setpoint is based on a temperature such as return chilled water temperature (Return & Constant Return) or outside ambient air temperature (Outside Air). The most common use of chilled water reset is to provide a constant return chilled water temperature, so the settings for constant reset are the default settings.

If Constant Return is selected, then the reset ratio, start reset setpoint and maximum reset setpoint are set by the UCM. If chilled water reset is disabled or constant return is selected, the next three related subscreens will not appear (i.e., reset ratio, start reset setpoint and maximum reset setpoint). If chilled water reset type is set at return or outdoor air, then the next three related subcreens will follow. Then, it may be necessary for the operator to adjust the desired reset ratio, start reset setpoint and maximum reset setpoint (if the factory settings are not getting the job done).

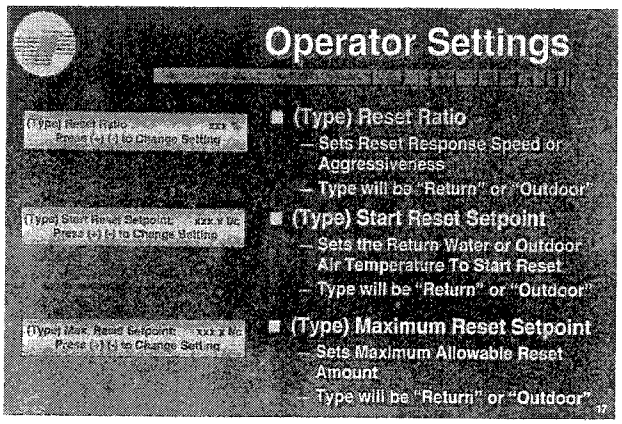

Figure 17

(Figure 17) Return and Outdoor reset setpoints can be calculated using the formulas provided in the chiller installation, operation and maintenance manuals.

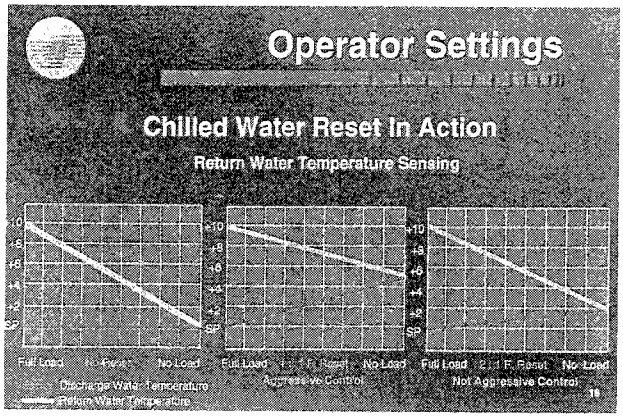

Figure 18

(Figure 18) In the "No Reset" example of the left chart, the chiller provides a constant discharge water temperature regardless of the return water temperature (return water temperature can drift anywhere).

In the "One-to-one" reset example of the middle chart, the UCP allows discharge water temperature (thus the chilled water setpoint) to raise at the same rate as return water temperature drops. This is considered aggressive reset control.

In the "Two-to-one" reset example in the right chart, the UCP raises discharge water temperature at only half the rate that the return water temperature drops. This is less aggressive reset control.

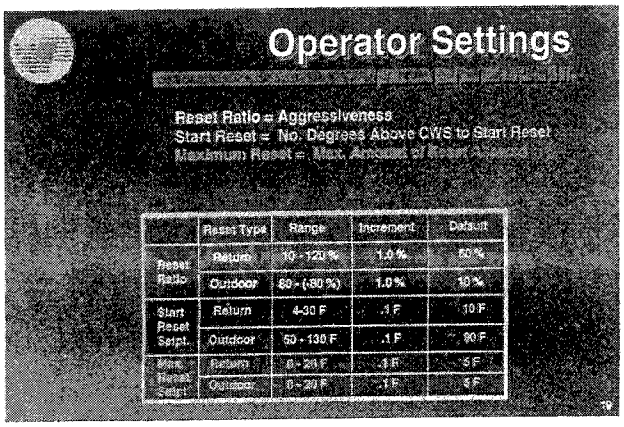

Figure 19

(Figure 19) Reset ratio is simply an arbitrary point that sets the rate of reset. Even though the default point is 50%, this will be set at the proper level for the job at the factory. If the operator feels that an increase or decrease in the reset rate (speed of reset) is needed, then the ratio must be adjusted up or down, accordingly.

At the default settings (reset ratio = 50%), when any chilled water reset is enabled, the UCP steps the chilled water setpoint toward the new (reset) setpoint at a rate of 1 F every 5 minutes until active chilled water setpoint matches the desired new setpoint.

When any type of reset is ordered, the setpoints are factory set for all chillers for the application. Resetting these values in the field is seldom necessary. If for some reason, the settings stored in memory were lost, then the default settings would take over. These setpoints are not lost when power is removed from the UCP.

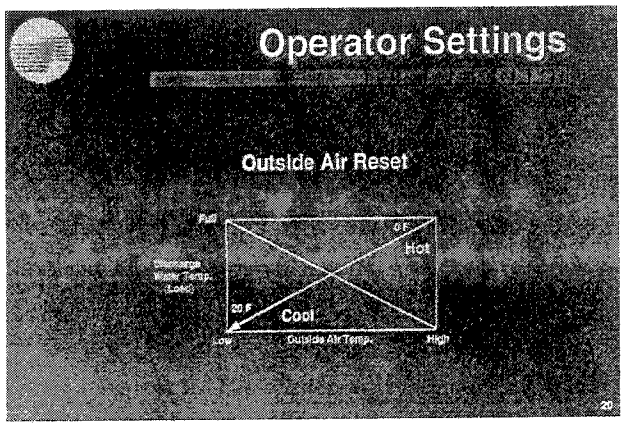

Figure 20

(Figure 20) For outside air reset, the chilled water setpoint is reset as outdoor temperature and cooling load decrease. In this example, maximum reset is set at 20 F.

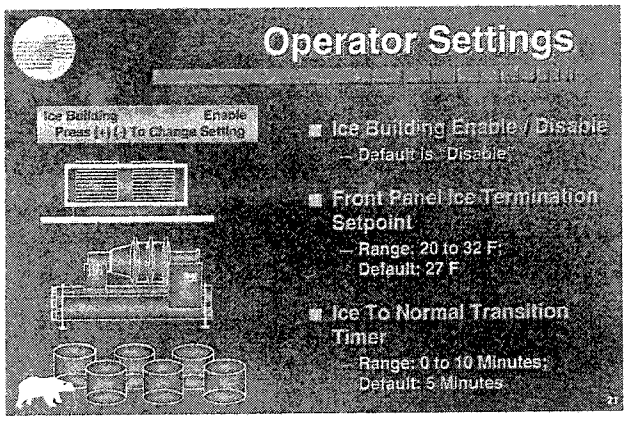

Figure 21

(Figure 21) Ice storage systems allow the chiller to operate at full load (build ice) during electrical off-peak periods (night) and use the stored ice as a cooling source during high electrical demand periods (day). During ice making operation, the chiller will be in "Ice-Building" operating mode.

Use the Ice Building Enable / Disable screen to select or turn off ice-making operation. Press (+) or (–) to change the setting. The Front Panel Ice Termination Setpoint is the return water (entering evaporator) temperature at which to stop making ice. Ice making can also be stopped by an external signal (Tracer) or opening of the External Ice Contact. The setting range is 20 to 32 F in 1 degree increments. The default setting is 27 F.

The transition timer is used when ice-making is terminated by a Tracer input or External Ice contacts to make the chiller run at minimum load for a set time period after the compressor unloads. The setting range is 0 to 10 minutes. The default setting is 5 minutes.

When ice-making is terminated, the chiller goes into "Ice-Making Complete" operating mode. If a CVHE/F operates in a surge condition for over 15 minutes, the chiller will shut down on the "Surge Shutdown: Ice Making" MMR diagnostic.

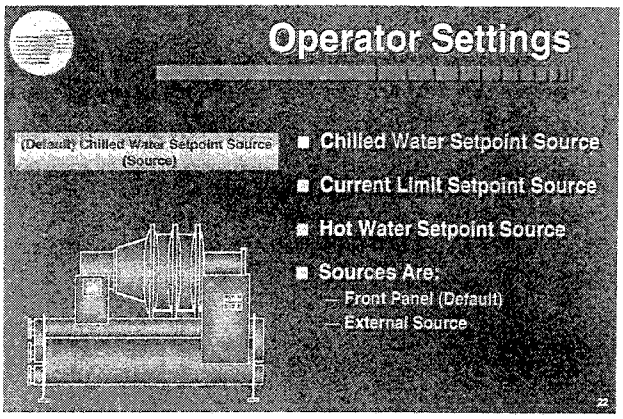

Figure 22

(Figure 22) The next five screens on the CLD (Figures 22 & 23) identify the sources for the present chilled water, current limit, hot water and ice termination setpoints and the setpoint override source and allow the operator to change the source if additional sources are installed. So, in order to change chilled water setpoint from the front panel to external source, the external chilled water setpoint inputs must be connected and that option installed from the Field Setup group.

Press (+) or (–) to change the displayed source. Possible sources are:

Front Panel (default)
External Source
Future 1, 2, 3 (Reserved for new sources options when available.)

The word "default" will appear at the beginning of all of the above source screens if the Tracer option is installed. If the Tracer does not provide a setpoint, then the default (front panel) is used. It is the valid setpoint source if there is no Tracer.

The Hot Water Setpoint Source screen will only display if the hot water control option is installed.

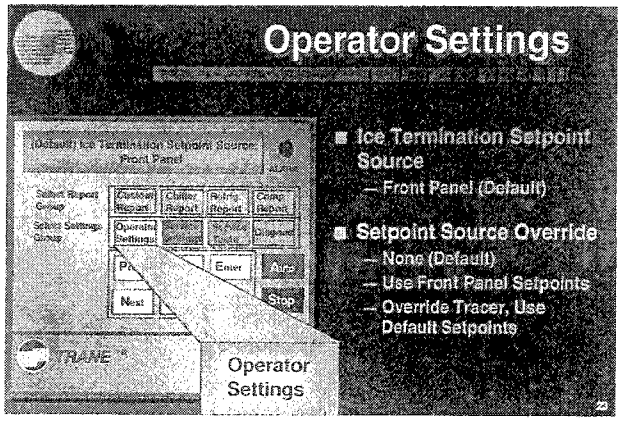

Figure 23

(Figure 23) The word "default" will appear at the beginning of the Ice Termination Setpoint Source screen if the Tracer option is installed. If the Tracer does not provide a setpoint, then the default (front panel) is used. It is the valid setpoint source if there is no Tracer.

The Setpoint Source Override screen allows the operator to override remote setpoints established by a Tracer or other generic input. Possible "sources" for this screen are:

None
Use Front Panel Setpoints
Override Tracer – Use Default Setpoints

"None" is the default setting.

Service Settings

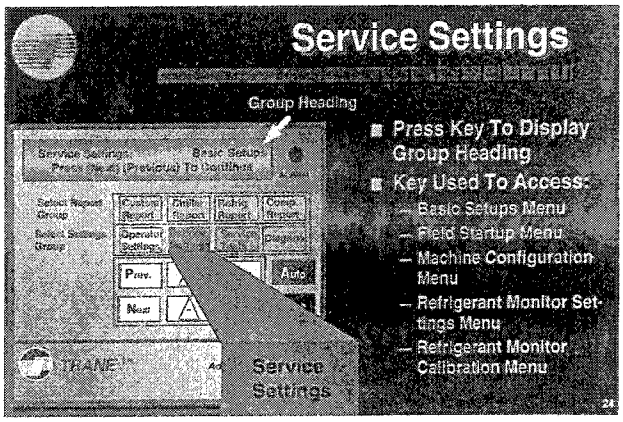

Figure 24

(Figure 24) The Service Settings Group consists of five separate menus. These are:

Basic Setups menu;
Field Startup menu;
Machine Configuration menu;
Refrigerant Monitor Settings menu;
Refrigerant Monitor Calibration menu

Each menu is protected by a different password, except for the Basic Setups menu. Although this menu does not have a password, the settings in it can be locked, just as in the previous menus we have discussed.

The Basic Setups menu consists of settings that would not often be accessed by the operator, and changes in them will not seriously affect the safety or reliability of the chiller.

The remaining password protected menus of this group are for changing parameters and settings for field commissioning, for setting fundamental protection of the chiller systems or for programming the UCP as to how the chiller was actually built in the factory.

Caution: Once these items are set they should never be changed again without specific knowledge of the effects these changes will have.

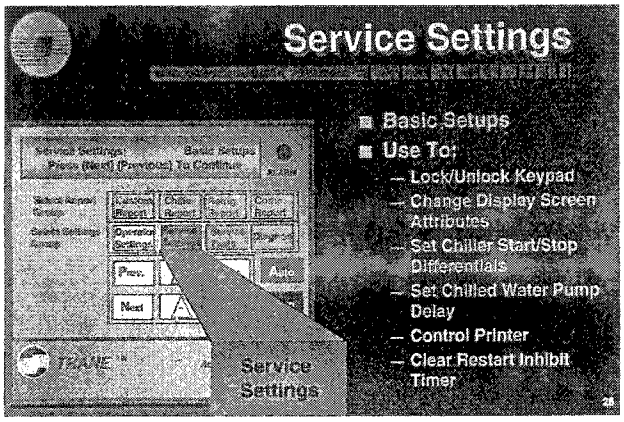

Figure 25

(Figure 25) Pressing the Service Settings key displays the Service Settings menu heading. If the group (menu) heading does not appear, the headings have been disabled. They can be restored from this settings menu. Press Next to continue to the Menu Settings Password screen. Service settings are used to set local chiller operating parameters and control settings.

Generally, the **Basic Setups** menu is used to:
– lock and unlock the keypad
– change display screen attributes (turn on / off group headings and menu setting password screens)
– set the chiller start and stop temperature differentials
– set the chilled water pump off time delay
– control printer operating settings
– clear the chiller restart inhibit timer

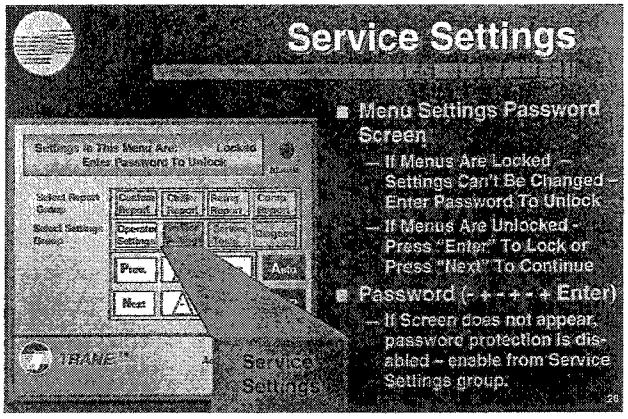

Figure 26

(Figure 26) This display screen indicates that the settings in the menu are either locked or unlocked and it displays the correct password on the second line for operator convenience. If the settings are locked, the operator can unlock them by entering the Menu Settings password. The password is (– + – + – +) followed by the Enter key.

If the settings are already unlocked, then the operator can change the settings in this menu. Alternately, at this time, the operator can choose to lock the settings in this menu by pressing Enter or can continue on to the next screen by pressing Next.

Note: Remember, any time you are entering a password with the + and – keys, up to 20 characters can be entered. The CLD uses the last six characters entered as the password, so in this case, the last six characters must be (– + – + – +) followed by the Enter key. So, up to 14 "nonsense" characters could be entered before keying in the correct password.

If too many characters or an incorrect password are entered, the CLD will display "Incorrect Password". If this screen does not appear, then the menu settings display feature has been disabled from Field Startup menu of the Service Settings Group.

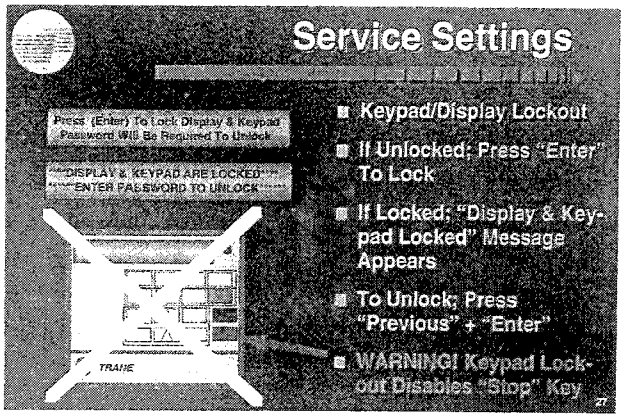

Figure 27

(Figure 27) If the Display and Keypad Are Locked, this screen appears when you attempt to use the UCP. Don't panic. Simply press the Previous and Enter keys simultaneously unlock the CLD.

If this screen does not appear, then the keypad lockout feature has been disabled from Field Startup menu of the Service Settings Group.

Locking out the keypad can be a dangerous thing to do, since this also disables the Auto and Stop keys. However, if the chiller is being controlled remotely from a remote CLD or Tracer, locking out the local keypad could be a good way prevent unauthorized personnel from inadvertently interfering with chiller operation.

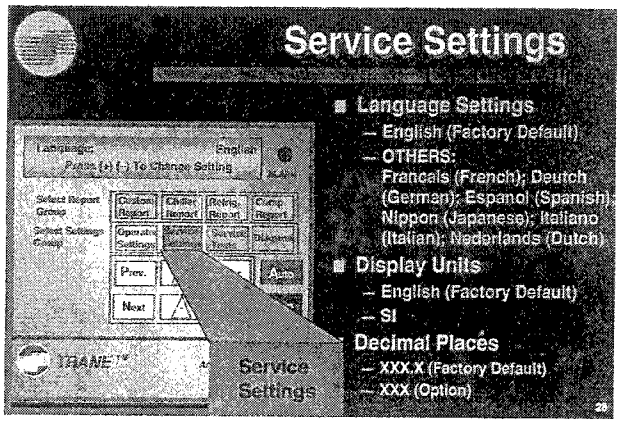

Figure 28

(Figure 28) The Language Setting screen is used to select the desired language for the CLD to use. The number of languages available depends on which software version is installed in the UCP. The factory default language is English. Press the (+) or (–) key and Enter to change languages.

The Display Units screen allows the operator to select to display data in either English or SI units. (i.e., temperatures in Fahrenheit or Celsius). The factory default units are English. Press the (+) or (–) key and Enter to change unit types.

Use the Decimal Places screen to select no decimal places displayed (i.e., 14) or tenths displayed (i.e., 14.0). The factory default is tenths displayed (i.e., 14.7). Press the (+) or (–) key and Enter to change the decimal display setting.

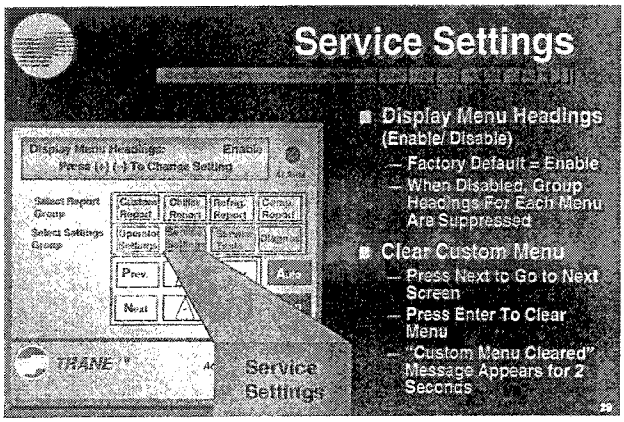

Figure 29

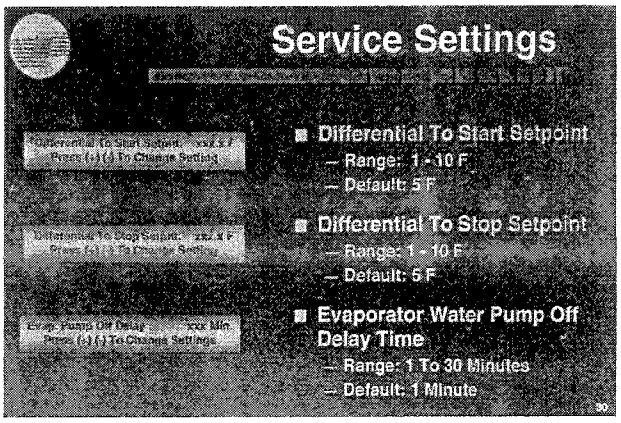

Figure 30

(Figure 29) The Display Menu Headings screen is where the group or menu headings are turned on and off. The operator has a choice of whether or not to view these headings as the first screen that appears when a menu key is pressed.

On one hand, turning off the headings saves the operator from having to scroll through this screen every time a new menu key is pressed. On the other hand, however, this screen verifies which menu the operator is accessing. It is easy to become confused and enter the wrong menu if these are turned off. The factory default is "headings enabled".

Press the (+) or (–) key and Enter to enable or disable the menu headings.

The Clear Custom Menu screen is a feature added at customer request. Pressing Enter at this screen clears all items from the Custom Report. With early versions of the UCP, the operator was required to enter the Custom Report menu and view each item individually in order to remove it from the report. There was no provision to allow the operator to totally clear the report of all items.

Press the Enter key to clear the Custom Report. Press Next to go to the next screen. If Enter is pressed, the Custom Menu Cleared screen will appear for two seconds.

(Figure 30) The Differential To Start Setpoint is the number of degrees above chilled water setpoint that return water temperature must drift before the chiller will start.

Press (+) or (–) to change the displayed setpoint up or down (in degrees F or C). The programmed factory default setpoint is 5 F. The setting range is 1 through 10 F.

The Differential To Stop Setpoint is the number of degrees below setpoint that supply water temperature must drift before the chiller will shut down. Press (+) or (–) to change the displayed setpoint up or down (in degrees F or C). The programmed factory default setpoint is 5 F and the setting range is 1 through 10 F.

The Evaporator Water Pump Off screen allows the operator to adjust amount of time that the chilled water pump will operate after compressor shutdown. Press (+) or (–) to change the displayed setpoint up or down (in minutes). The programmed factory default setpoint is one minute. The setting range is 1 through 30 minutes.

If you try to establish a setpoint above or below the possible range, one of these two messages is displayed on the second line of the screen:

"Top of Range, Press (–) to Advance"
or;
"Bottom of Range, Press (+) to Continue"

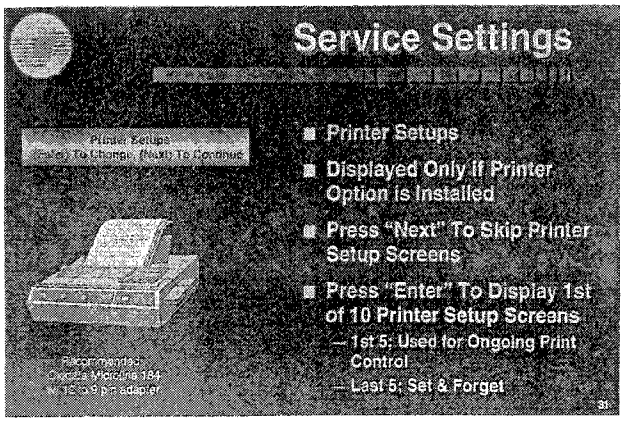

Figure 31

(Figure 31) If a printer is connected to the UCP (which requires the printer interface module), and the printer option has been installed from the Machine Configuration menu, the Printer Setups screen is displayed.

Press Next to go on to next Service Setting screen. Press Enter to view the ten printer setup screens.

The first five of these screens are used for ongoing control of the printer. The rest of the screens are used to set up the permanent printer configuration (as long as that particular printer is connected).

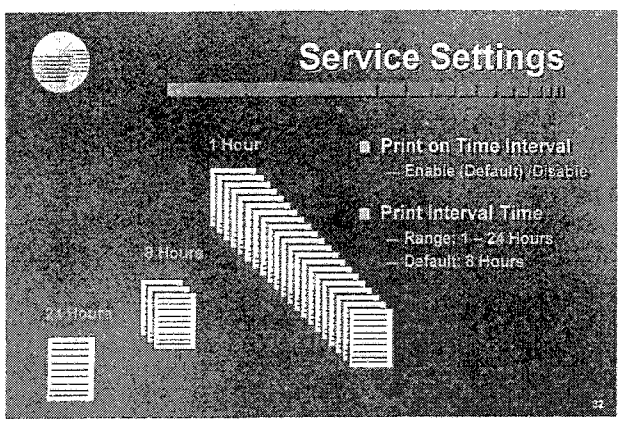

Figure 32

(Figure 32) As you will recall, a set of printed reports can be obtained on demand from the Print Report screen of the Operator Settings. The set consists of a chiller status report and an ASHRAE Guideline 3 report. These two screens allow the operator to select a set of printed reports at specific time intervals.

The operator uses the Print On Time Interval screen to enable or disable time interval report printing. The display will indicate whether this feature is enabled or disabled. Press (+) or (–) to change the setting.

The Print Interval Time screen allows the operator to choose how often the report set is printed. The time interval between printed reports can be set anywhere from 1 hour to 24 hours at one hour intervals.

If the operator sets the interval to 24 hours, then one report is printed every 24 hours. If the operator sets the interval to one hour, then 24 report sets would be printed in a 24 hour period. The default setting is eight hours, which results in the production of three printed report sets every 24 hours.

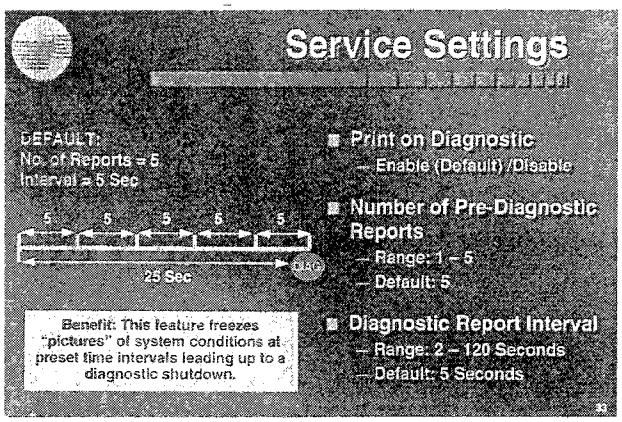

Figure 33

(Figure 33) The Print on Diagnostic screen is used to enable and disable diagnostic printing. The display will indicate whether this feature is enabled or disabled. Press (+) or (–) to change the setting.

These three screens allow the operator to select a specific number of printed report sets at specific time intervals whenever a diagnostic occurs. The Number of Pre-Diagnostic Reports screen allows the operator to choose to print between one and five reports each time a diagnostic occurs. The Diagnostic Report Interval screen lets the operator select the time interval between printed reports when a diagnostic occurs. This can be set anywhere from 2 to 120 seconds at two second intervals.

The default setting is one report every five seconds. The number of reports printed depends on the Number of Pre-Diagnostic Reports setting in the screen above.

The illustration in Figure 33 shows that at the default setting of 5 reports to be printed at 5-second intervals on a diagnostic, you would get a printout of system conditions covering a 25-second period before the diagnostic occurred.

The UPC2 is able to do this because, as we mentioned before, the chiller module is updating the CLD every two seconds, so the UCP is "freezing" a set of data every two seconds during operation.

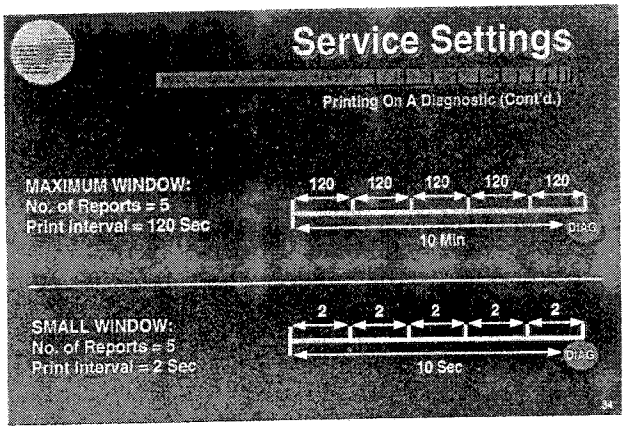

Figure 34

(Figure 34) The Maximum Window example in this figure shows the largest amount of time that can be covered before a diagnostic occurs. (Still using the maximum number of 5 reports).

This example shows that at a setting of five reports to be printed at the maximum 120-second (two minute) intervals on a diagnostic, you would get five printouts of system conditions covering a 10 minute period before the diagnostic occurred.

The Small Window example in Figure 34 shows the minimum amount of time that can be covered before a diagnostic occurs. (Still using the maximum number of 5 reports).

This example shows that at a setting of five reports to be printed at the minimum 2-second intervals on a diagnostic, you would get five printouts of system conditions covering a 10-second period before the diagnostic occurred.

By varying printed report output, the operator can pinpoint problems that may be developing that could cause diagnostics to occur.

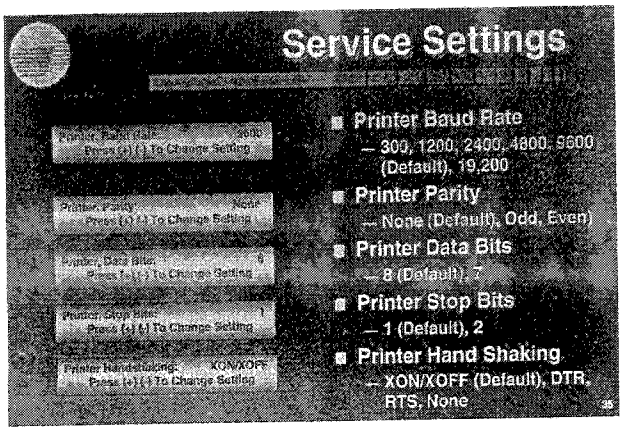

Figure 35

(Figure 35) The remaining printer setup screens are used to set printer configuration parameters that are permanent once they are set for the printer being used. These settings are printer baud rate, printer parity, printer data bits, printer stop bits and printer hand-shaking.

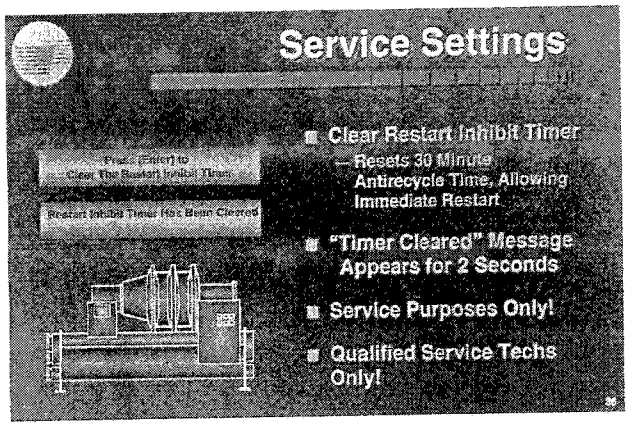

Figure 36

(Figure 36) The Clear Restart Inhibit Timer screen is provided to allow servicing personnel convenient access to a means of zeroing the restart inhibit timer so the machine can be restarted. To zero the timer, just press Enter when viewing this screen.

The restart inhibit timer protects the compressor motor and starter from damage that can be caused by short cycling (too frequent restarts). The amount of time on the timer varies with the type of chiller and size of compressor. Minimum time setting is 30 seconds for all chillers. Maximum is 8 minutes for RTHB and 60 minutes for CVHE/F units. This time can vary with each restart, because the timing also depends on motor temperature.

Service Tests

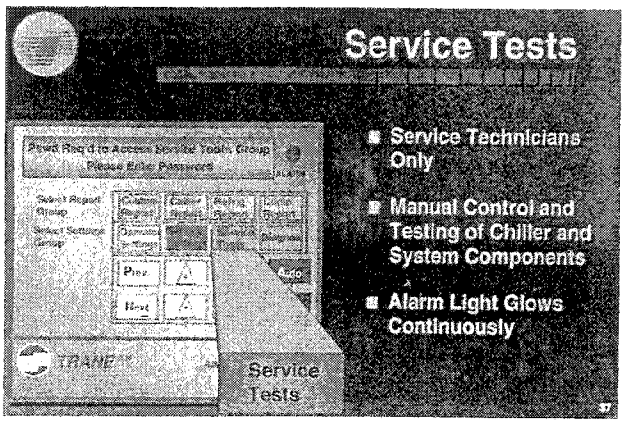

Figure 37

(Figure 37) The Service Tests menu, which is not discussed in detail in this course, provides a service technician the ability to manually control and test the functioning of the following components:

- Evaporator (chilled) water pump
- Condenser water pump
- CTV oil pump
- CTV inlet guide vanes
- RTHB electronic expansion valve
- RTHB slide valve
- Condenser and evaporator water flow switches

This menu, which is intended for use by qualified service personnel only, also allows the technician to test starter contactor integrity by performing a starter "dry run" test.

Note: The "Alarm LED" on the CLD will be lighted continuously when any service test procedure is being conducted.

Diagnostics

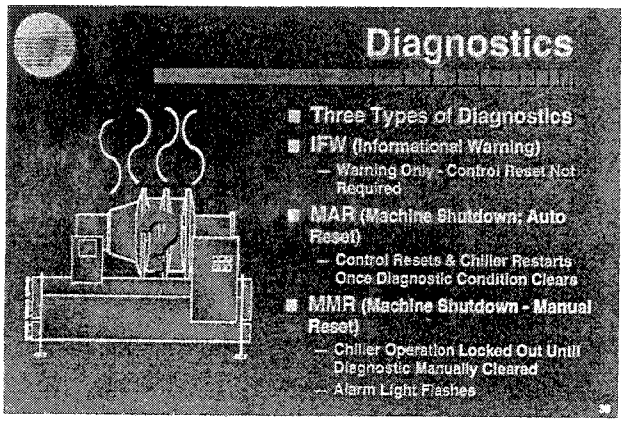

Figure 38

(Figure 38) The UCP2 recognizes three types or "levels" of diagnostics. The lowest level diagnostic, the informational warning (IFW) **does not** shut down the chiller. Both of the other two diagnostic types, MAR (machine shutdown / auto reset) and MMR (machine shutdown / manual reset) **will** shut down the chiller.

Only the highest level diagnostic, the MMR type, requires a manual reset of the control system to restart the chiller. MAR type diagnostics will allow the chiller to automatically continue operation once the diagnostic condition is corrected.

When an MMR occurs and the chiller shuts down, the alarm light on the face of the CLD flashes until the UCP is reset.

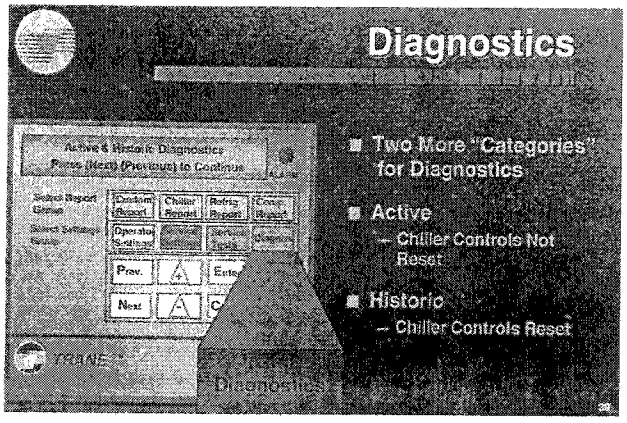

Figure 39

(Figure 39) Pressing the Diagnostics key displays the Diagnostics group or menu heading shown in this slide. If the group (menu) heading does not appear, the headings have been disabled. They can be restored from the Basic Setups area of the Service Settings menu.

The Diagnostic menu is used to view the diagnostic log and clear active and historic diagnostics from the UCP memory. Press Next to continue to the Menu Settings Password screen.

In addition to diagnostic types or levels, diagnostics are also categorized as being either "active" or "historic". Once active diagnostics are cleared, they become historic diagnostics.

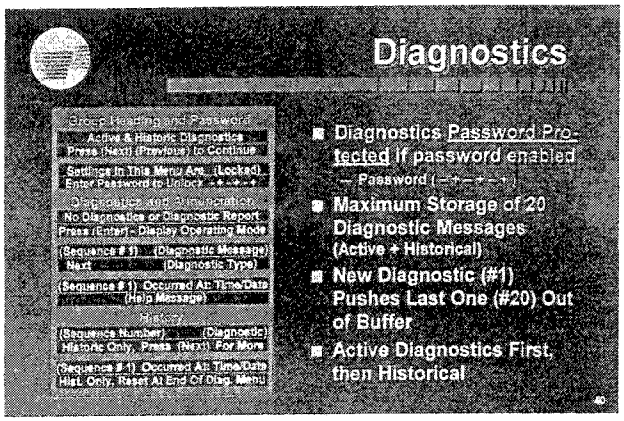

Figure 40

(Figure 40) Figure 40 shows the initial display screens and the organization of the diagnostic menu. As in all other menus, the Password Settings screen indicates that the settings in the menu are either locked or unlocked. If they are locked, the operator can unlock them by pressing (– + – + – +) followed by the Enter key.

Once unlocked, the operator can use the menu. If this screen does not appear, then the menu settings display feature has been disabled from Field Startup menu of the Service Settings Group. If there are no diagnostics present in the log, the only screen that displays is "No Diagnostics Present / Press (Next) Previous to Continue". If there are diagnostics in the log, the Diagnostic Report Follows / Press (Next) for More screen is displayed.

The next screen is "Press (Enter) to Display Operating Mode At Time of Last Diagnostic or (Next) for More". Pressing Enter displays the operating mode screen that was active when the diagnostic occurred. Pressing Next goes straight to the diagnostic log.

The log will display up to 20 **total** diagnostics (active + historic), in order of occurrence and are numbered one through 20. If the buffer is full, the last (#20) diagnostic is pushed out of the buffer when a new one is added.

In the log, active diagnostics are displayed on two screens. The first screen for each lists the diagnostic number, name and type. The second screen gives the diagnostic number, the time and date of occurrence and a help message, suggesting possible service procedures to consider.

Historic diagnostics are listed after active ones. If there are 20 active diagnostics, there can be no historics, since the log only holds 20 diagnostics. Historic diagnostics are also displayed on two screens. The first gives diagnostic number, type and shows that it is historic only. The second gives diagnostic number, the time and date of occurrence and shows that it is historic.

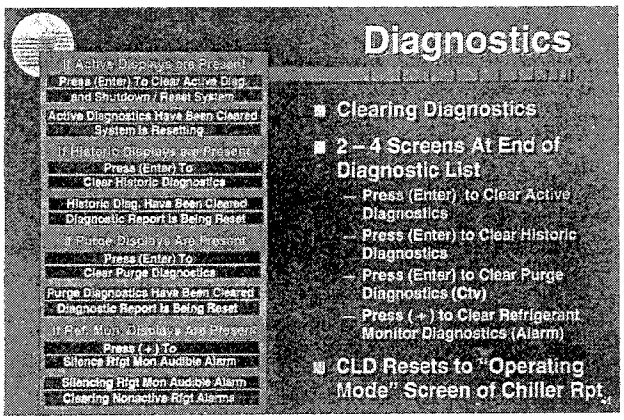

Figure 41

(Figure 41) Once the CLD is displaying the diagnostic log, the operator should scroll through the log, noting the types of <u>all</u> diagnostics present, the times that they occurred and any help messages displayed. This is recommended because once active diagnostics are reset they enter the history buffer. This may cause some entries already in the history buffer to be deleted before the operator could see them. All active diagnostics will be lost on a loss of power.

Note: All purge and refrigerant monitor diagnostics will be listed in the history buffer and they could be pushed out before the operator can view them.

All diagnostics can be cleared from the <u>local</u> CLD. The Clear Diagnostics screens are located at the end of the diagnostic log.

When the operator clears the active diagnostics they enter the Historic buffer and the Cleared / Resetting screen appears for 2 seconds. When the operator clears the historic, purge or refrigerant monitor diagnostics, the Cleared / Resetting screen appears for 4 seconds. Once diagnostics have been cleared, the CLD reverts to the Operating Mode screen of the Chiller Report menu.

Note: If the condition that caused the diagnostic to appear is not corrected, the diagnostic will be re-established.

MENU SECURITY REVIEW

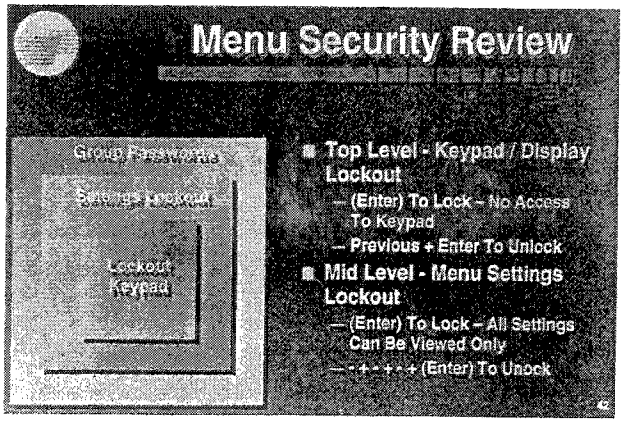

Figure 42

(Figure 42) Figures 42 and 43 provide a review of the UCP2 menu security system. At the top level of security, the whole keypad can be locked out. NO KEYS FUNCTION!

Remember:

The keypad is locked from one of the first screens in the Basic Setups of the Service Settings group. To unlock a locked keypad, press the Previous and Enter keys simultaneously.

Locking out the keypad disables the Auto and Stop keys.

At the next level, the settings in any settings menu can be locked by enabling the Menu Settings Password screens.

Remember:

The menu settings password protection is enabled (and disabled) from the Field Setup menu of the Service Settings group. (This enables the menu settings password screen for all menus at once. You can have all enabled or disabled but not just certain ones.)

The settings for each menu can be locked or unlocked at the second screen of each menu if this feature has been enabled.

Press Enter to lock or press (– + – + – +) and Enter to unlock.

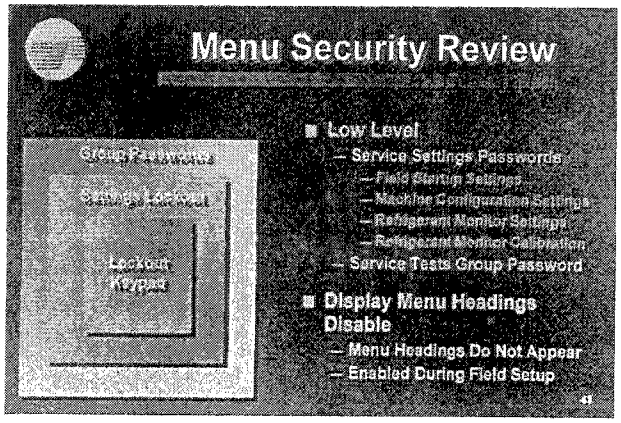

Figure 43

(Figure 43) At the lowest level, certain individual menus have specific passwords. They are:

- **Service Settings Passwords**
  - **Field Startup Settings**
  - **Machine Configuration Settings**
  - **Refrigerant Monitor Settings**
  - **Refrigerant Monitor Calibration**
- **Service Tests Group Password**

These passwords are provided in the chiller IOM manual.

Although not really intended as part of the menu security scheme, the ability to prevent the menu headings from being displayed could be used to discourage unauthorized UCP use, since it is likely more difficult for an person unfamiliar with the menu system to use the clear language display without the menu headings.

OPERATING WITH UCP2

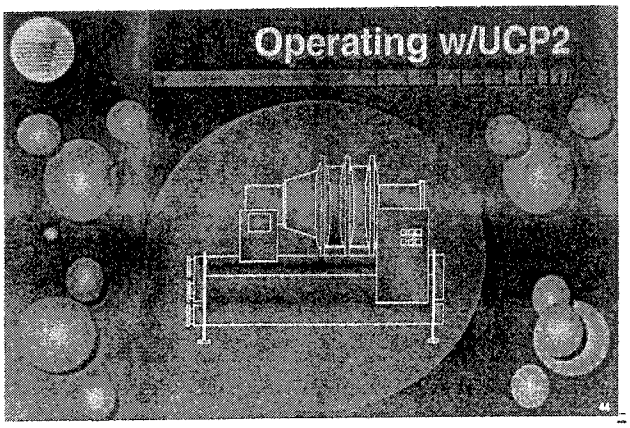

Figure 44

(Figure 44) The final section of this manual describes basic chiller operation, including specific operating sequences; auto operation and the chiller stop sequence. It also discusses routine chiller logging procedures, report printing duties, briefly reviews what to do when diagnostic shutdowns occur and how the remote clear language display is used.

Power-Up Sequence

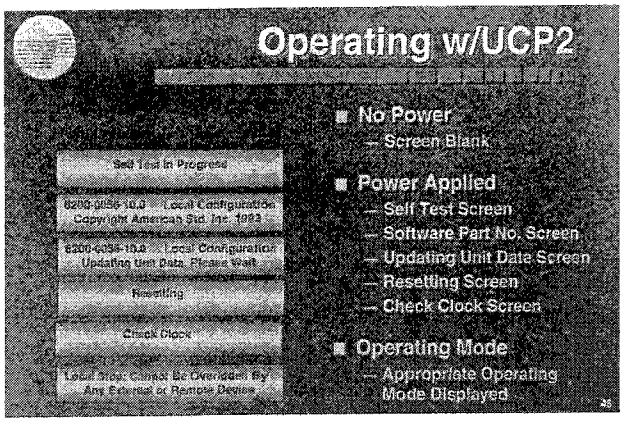

Figure 45

(Figure 45) When electrical power is off, the CLD screen is blank as shown in the first screen of Figure 45. When power is first applied, the UCP goes through a "power up" routine. The power up sequence takes 20 seconds before the CLD enters the Stop operating mode. During power up, the UCP performs a series of self-diagnostics (Self-Test screen).

The Software Part No. screen is the identifier of the software version that is installed in the UCP.

The Check Clock screen is a reminder to be sure that the chiller clock is set correctly. It doesn't keep time when power is removed from the UCP.

While the Updating Unit Data screen is displayed, the CLD is retrieving all available data from the chiller module memory about unit configuration and setup.

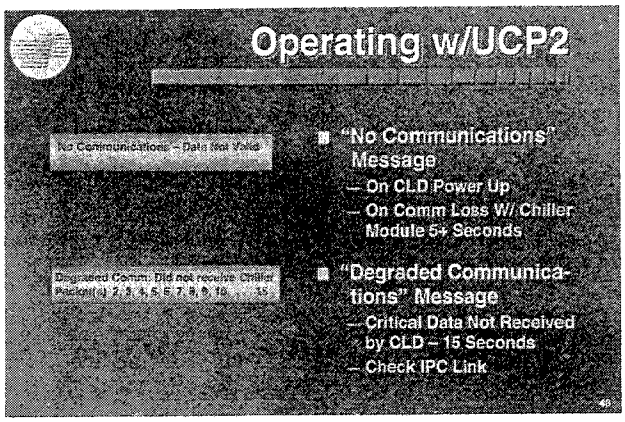

Figure 46

(Figure 46) The settings used by the chiller are stored in the chiller module, not in the CLD. The chiller module contains the non-volatile memory that stores these settings when power is removed. It also has to verify that none of the settings in memory have been corrupted. If any have, it will substitute default settings instead.

The CLD just stores copies of settings so it can display and change them. The original settings in the chiller module are not changed until Enter is pressed after making a change.

If upon power up, there is no communication with the chiller module, the No Communications screen is displayed. This screen will reappear any time that all chiller module communications are lost for more than five seconds.

Note: If certain critical data is not received by the CLD from the chiller module every 15 seconds, an IFW diagnostic (Degraded Communications screen) is generated. The chiller can run in this condition, using setpoints already in memory. Check the IPC link wiring and connections. The CLD will return to normal once communications are re-established.

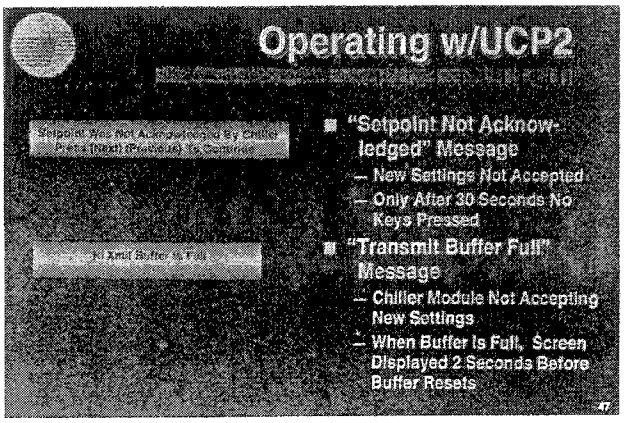

Figure 47

(Figure 47) During operation, if a settings change is made and communicated to the chiller module, but is not accepted after 30 seconds of no key activity on the CLD, the Setpoint Not Acknowledged screen is displayed at the end of the chiller report.

If you enter a lot of settings changes (send them to the chiller module) that are not acknowledged by the chiller module, then the CLD transmit buffer will become full of data and won't be able to take any more changes. If this happens, the Transmit Buffer Full message is displayed for two seconds before the CLD clears the buffer and all the changes are lost. If you get this message, there is a problem between the chiller module and the CLD.

Auto Key

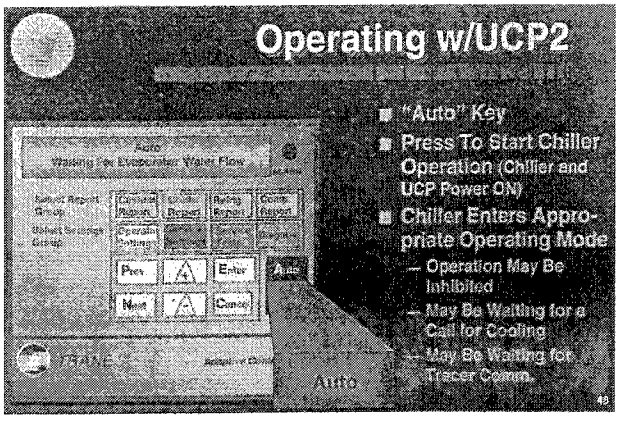

Figure 48

(Figure 48) To start the chiller from a power up or from a Stop condition after a normal shutdown, press the Auto key. Whether or not the chiller starts, depends upon many variables, including differential to start condition, whether the restart inhibit timer is timed out, whether or not Tracer communications have been established, etc. The CLD will indicate what is happening by displaying the appropriate operating mode screen.

Chiller Operating Sequence

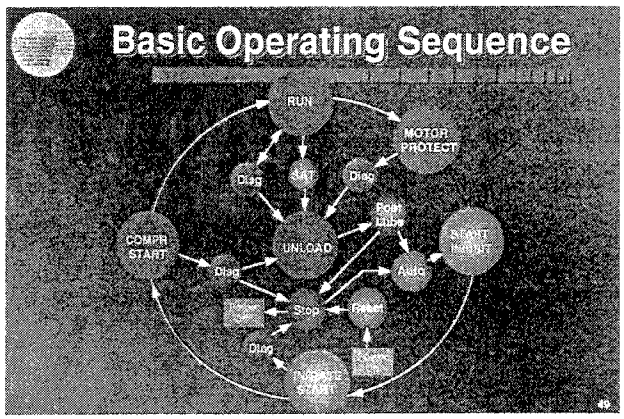

Figure 49

(Figure 49) As we have just seen, from a Power Off condition following a normal shutdown, the UCP goes through a power up (reset) sequence that performs self diagnostic tests and resets the control system for renewed operation.

Once this procedure is complete, the control enters a Stop condition (operating mode) and waits for a start command. Then the restart inhibit timer begins timing out and on CenTraVacs, the inlet guide vanes are driven closed for 50 seconds to insure that the compressor starts unloaded. Also during this time, inlet guide vane operation is tested. This is done on all control resets and on a call for cooling after 24 hours of no cooling.

When operating mode is set to Auto by pressing the Auto key, the chilled water pump starts. Chilled water flow must be proven in 3 minutes. If the UCP has received a call for cooling and 30 seconds or less remain on the restart inhibit timer, the UCP will enter the Initiate Start mode, starting the condenser water pump. Condenser water flow must be proven in 3 minutes.

On CenTraVacs, the oil pump starts also. 9 psid oil pressure must be proven in 3 minutes. On entering Initiate Start for RTHB units, the master oil line solenoid is energized, the oil heater is turned off and the unload solenoid valve is energized for 30 seconds to insure an unloaded compressor start. At the end of the restart inhibit time period, the UCP performs a starter test.

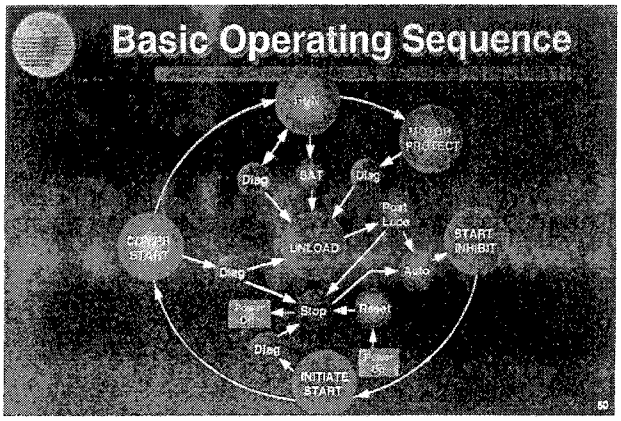

Figure 50

(Figure 50) After a successful starter integrity test, the UCP sends a start signal to the compressor motor. The motor starts in Wye configuration and the maximum acceleration timer starts timing out. On CenTraVacs, the vent line solenoid valve closes temporarily. Once the compressor has accelerated and maximum phase current drops below 85% of name-plate RLA for 1.5 seconds, the starter initiates transition to Delta configuration. Proof of transition must occur within 2.5 seconds of transition initiation. During compressor start, diagnostics can occur that will cause the compressor to unload or unload / stop. Once compressor is running normally, inlet guide vanes (CTV) or unloader slide valve (RTH) are modulated to satisfy the chilled water setpoint. During operation, numerous diagnostics can occur that will cause the compressor to unload or unload / shut down. Also, the compressor may stop due to the fact that the cooling load is satisfied. During normal operation, motor protection devices are active that can generate diagnostics that will unload or unload and shut down the compressor.

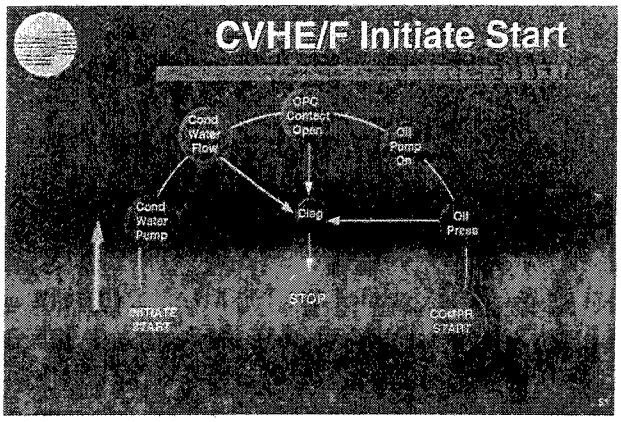

Figure 51

(Figure 51) Initiate Start mode begins when the UCP issues a call for cooling and less than 30 seconds remain on the restart inhibit timer. If the chiller is in a Stop mode, the chilled water pump starts when the Auto key is pressed. If the chiller is already in Auto mode and has shut down because cooling load is satisfied and is just restarting due to a need for cooling, the chilled water pump will have been operating continuously.

For CenTraVac units, when Initiate Start mode begins, the condenser water pump starts. Condenser water flow must be proven within 3 minutes or a diagnostic is generated that sends the chiller into a Stop condition. Also, the UCP checks for an open oil pump start contact. An open contact will result in a diagnostic that sends the UCP back to a Stop condition.

Then the oil pump is started. The UCP must verify nine psid oil pressure for 30 contiguous seconds before compressor start. If not, a diagnostic is generated that sends the chiller back to a Stop mode.

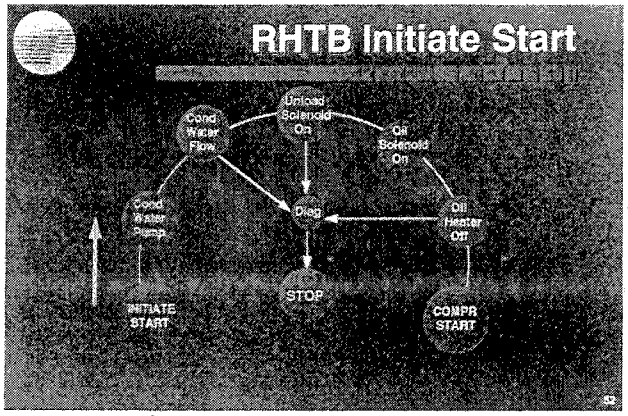

Figure 52

(Figure 52) When Initiate Start mode begins for RTHB units, the condenser water pump starts. Condenser water flow must be proven within 3 minutes or a diagnostic is generated that sends the chiller into a Stop condition. The master oil line solenoid valve is energized, the oil sump heater is turned off and the slide valve unload solenoid valve is energized for 30 seconds to make sure the compressor starts unloaded.

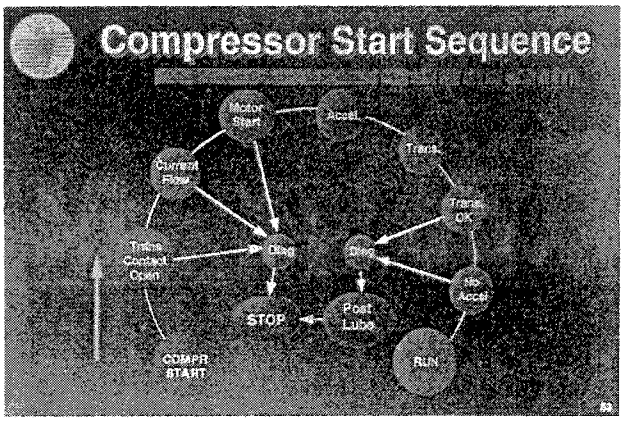

Figure 53

(Figure 53) Compressor Start begins with a UCP test to insure that the transition-complete contact is open. If it is closed, a diagnostic is generated and the chiller enters a Stop condition. The UCP then checks the start (Y-Delta only) and shorting (all starters) contactors for No Current. Current at either contactor generates a diagnostic and the chiller enters a Stop condition.

As previously described, after the starter integrity test, the UCP sends a start signal to the compressor motor. The motor starts and the acceleration timer starts timing out. Once the compressor has accelerated, the starter initiates transition to Delta configuration. Proof of transition must occur within 2.5 seconds of transition initiation. If the compressor motor does not accelerate to proper speed within the limit of the maximum acceleration timer (5 seconds for RTHB, 27 seconds for CVHE/F), a diagnostic is generated and the chiller enters a Stop condition. Then, on CVHE/F units, the vent line solenoid valve opens back up.

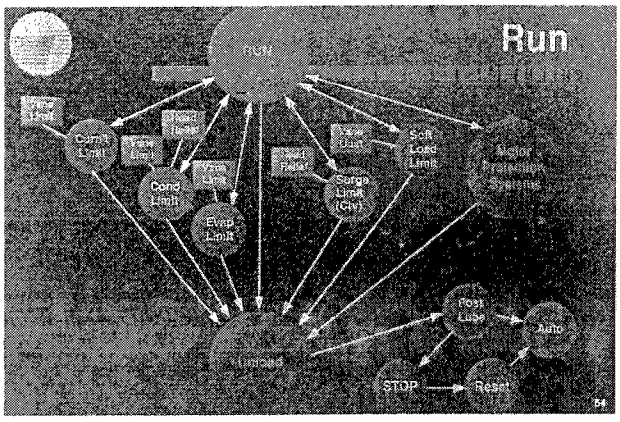

Figure 54

(Figure 54) Once the compressor runs normally, the inlet guide vanes (CTV) or unloader slide valve (RTH) are modulated to satisfy the chilled water setpoint.

Again, during operation, numerous diagnostics can occur that will cause the compressor to unload or unload and shut down. Also, the compressor may stop due to the fact that the cooling load is satisfied.

During normal operation, various motor protection devices are active that can generate diagnostics that will unload or unload and shut down the compressor Once in Run mode, the chiller can operate in various load-limiting sub-modes, depending on system and chiller conditions. These include Current Limit, Evaporator Limit, Condenser Limit, Surge Limit, Softloading, etc. During limit conditions, the UCP utilizes a vane (CTV) or slide valve (RTH) limit function that prevents loading or unloads the compressor as the condition increases. The objective is to keep the chiller on line and avoid a shutdown.

Stop Sequence

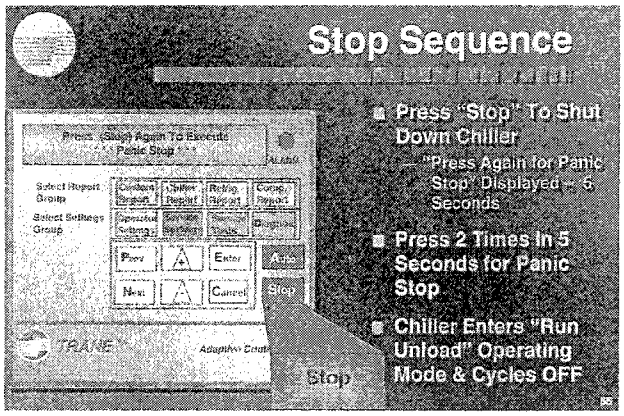

Figure 55

(Figure 55) Press the Stop key to shut down chiller operation. The Press (Stop) Again screen will appear for five seconds, giving the operator a chance to perform a Panic Stop.

If the operator presses the Stop key again while this screen is displayed, the chiller will enter a "Panic Stop" condition. On the other hand, if the Press (Stop) Again screen is allowed to pass, the chiller will enter the "Run Unload" operating mode and shut down normally.

Once shutdown is complete, the CLD reverts to the appropriate Operating Mode screen. This may be the group heading or menu password screen if they are enabled. If not, the CLD will show an actual operation mode. If shutdown is due to an MMR or MAR, a diagnostic warning screen will appear.

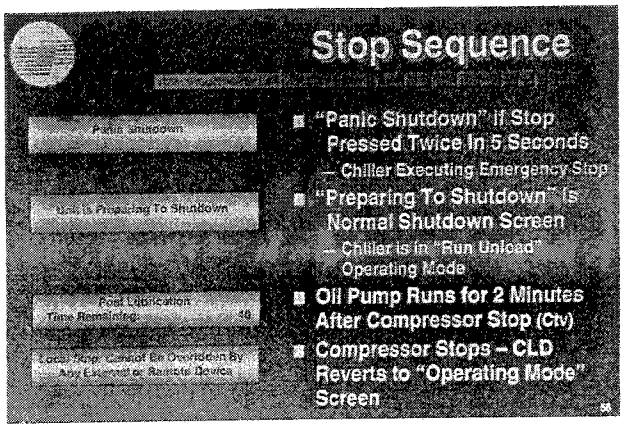

Figure 56

(Figure 56) If the operator selected panic stop, a Panic Shutdown screen appears while panic stop sequence is executed. If the chiller is allowed to shut down normally, it will enter "Run Unload" operating mode and display Unit Is Preparing to Shutdown. If the chiller is shutting down because the cooling requirement has been satisfied, then it goes directly into "Run Unload" mode without displaying the Press Again for Panic Stop screen. The chilled water pump continues to run.

CVHE/F Stop Sequence

During "Run Unload" mode, the compressor is gradually unloaded by closing the inlet guide vanes. Once fully unloaded, the compressor stops, condenser water pump turns off, and the chiller enters "Post Lube" mode (Figure 56). The screen shows the amount of time left for continued oil pump operation. Once the two-minute post lube function times out, CLD reverts to the appropriate Operating Mode screen. The chilled water pump shuts off after the delay timer times out.

RTHB Stop Sequence

During "Run Unload" mode, the unload solenoid energizes (20 seconds) and the load solenoid deenergizes. The compressor continues to run. The slide valves move away from the rotors, unloading the compressor. After 20 seconds, the compressor turns off, the master oil line solenoid turns off, the crankcase heater turns on and the condenser water pump turns off. The electronic expansion valve travels to full open and the CLD reverts to the appropriate Operating Mode screen. The chilled water pump shuts off after the delay timer times out.

Panic vs. Normal Stop

A panic stop differs from a normal stop in that, during a panic stop, the compressor stops immediately without unloading.

Chiller Logging

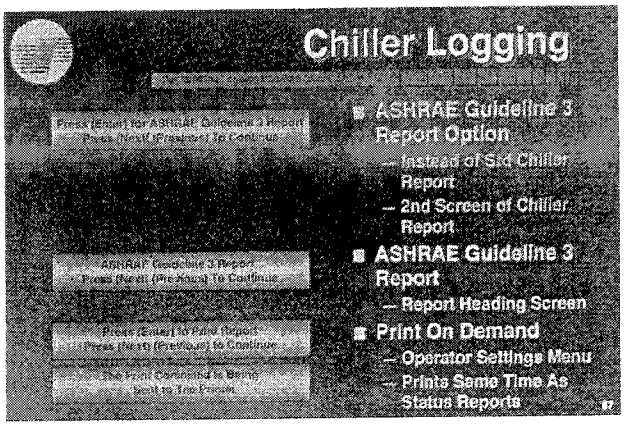

Figure 57

(Figure 57) One of the primary reasons for logging a chiller is to keep a running record of refrigerant and oil usage. In 1995, a new feature was implemented in the Chiller Report to allow an operator to view an ASHRAE Guideline 3 Report (See Note below).

This report is a compilation of data points from various UCP2 reports that ASHRAE recommends be monitored and logged daily to prevent refrigerant loss. This recommendation applies specifically to centrifugal and large positive displacement (medium and high pressure) systems.

This report is accessed at the second screen of the chiller report. At that point, the operator has to decide whether to view the standard UCP2 chiller report, or view the ASHRAE Guideline 3 report. If Enter is pressed, then the ASHRAE Guideline 3 report heading appears. Then press Next to view the report items.

In addition, the "Guideline 3" report can be added to the UCP Custom Report **as a single item**, which greatly increases the number of data points available in it.

The ASHRAE Guideline 3 report can be useful for maintaining proper records for a refrigerant management program. This report will be printed any time that a chiller status report is sent to the printer. If the printer is set up to print on a time interval or on a diagnostic, then the ASHRAE report will print also. Remember, that the print on demand screen (shown above) is located in the Operator Settings menu.

Note: The ASHRAE Guideline 3 report is not found on earlier-model UCP2 panels. This means that on those panels, the operator can view only the normal chiller report and print out only the chiller status report.

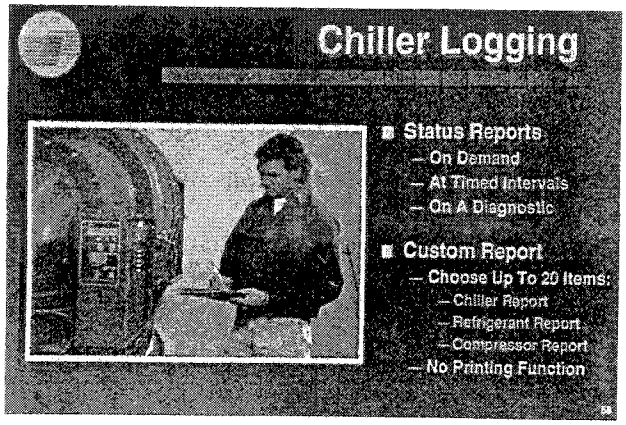

Figure 58

(Figure 58) This slide should be entitled "Chiller Logging Made Easy", because that's one of the biggest benefits of UCP2.

It's standard operating procedure to maintain a regular log of chiller operating conditions. Even with UCP1, this was a laborious procedure, requiring the operator to access each coded item on the UCP display and record it, measure water flows and pressures separately and record them, etc.

With UCP2, nearly all the data you need to view in order to log the chiller is available through your custom, chiller, refrigerant and compressor reports.

If a printer is installed, then your job is even easier. Chiller "Status" and "ASHRAE Guideline 3 Reports" are available whenever you need them. They can be printed on demand, at timed intervals and also any time a diagnostic occurs.

Remember, the "print-on-demand" function is found in the Operator Settings menu and the "print-at-intervals" and "print-on-diagnostics" are set up in the Basic Setups of the Service Settings menu. That's a lot of printed data available at your fingertips without ever having to enter the Chiller, Refrigerant or Compressor Reports.

If you could possibly still need any additional items of data that are not included in the printed reports, you can set up 20 additional items to show up in your Custom Report. The only drawback this is that the Custom Report can't be printed.

Diagnostic Shutdown Recovery

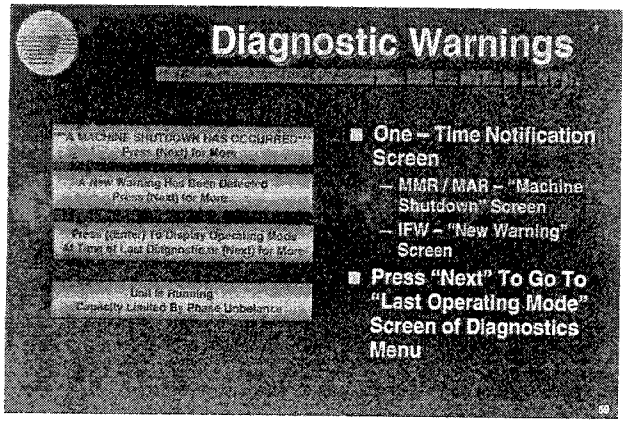

Figure 59

(Figure 59) What happens when a diagnostic occurs? It depends on the kind of diagnostic. If it's a "show-stopper", meaning an MMR (Machine Manual Reset) or an MAR (Machine Auto Reset) type, then the chiller will shut down and the CLD will display the first screen shown above:

"A Machine Shutdown Has Occurred"

Remember, in the case of the MAR, the condition that caused the shutdown may clear itself and the chiller will restart. If not, then the machine will restart once the condition is corrected.

An MMR, however, requires that the operator manually "clear" the diagnostic to reset the system controls before the chiller can restart.

If the diagnostic is an IFW (Informational Warning) type, then the A New Warning Has Been Detected screen is displayed but the chiller does not shut down.

When one of these screens is displayed, the operator must press the Next key. This will take the operator to the 3rd screen shown in this slide which is part of the diagnostics menu:

"Press (Enter) To Display Operating Mode At Time of Last Diagnostic or (Next) for More"

The Operator will press Enter to view the last screen shown on this slide which indicates what operating mode the chiller was in when the diagnostic occurred. The operator can choose to press Next instead, which skips this screen and advances straight to the diagnostic log.

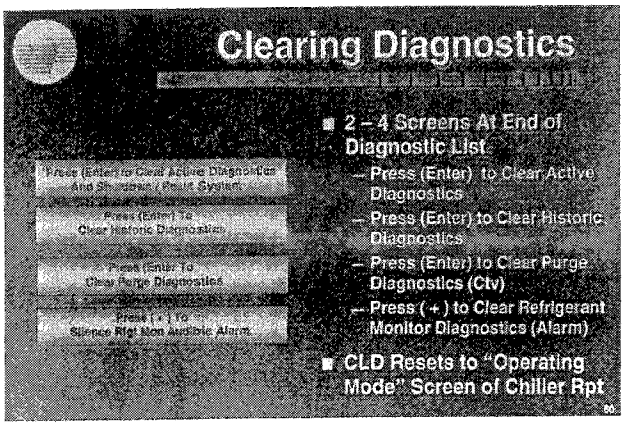

Figure 60

(Figure 60) Once the CLD is displaying the diagnostic log, the operator should scroll through the log, noting the types of diagnostics present, the times that they occurred and any help messages displayed.

The Clear Diagnostics screens are located at the end of the diagnostic log. When the operator clears active diagnostics, the Cleared / Resetting screen appears for 2 seconds. When the operator clears historic, purge or refrigerant monitor diagnostics, the Cleared / Resetting screen appears for 4 seconds. Once diagnostics have been cleared, the CLD reverts to the Operating Mode screen of the Chiller Report menu.

Note: If the condition that caused a diagnostic to appear is not corrected, the diagnostic will repeat.

Remote CLD

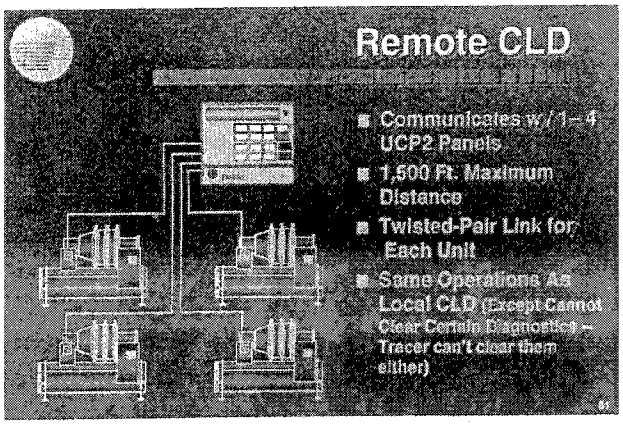

Figure 61

(Figure 61) The last four figures in this manual are a quick review of the remote clear language display (CLD) capabilities and a brief discussion of how the displayed information varies from the screens of the chiller-mounted CLD.

Each UCP2 panel can support two clear language displays, one on the chiller and a remote-mounted one. The remote CLD can be as far away as 1,500 feet from the chiller. The communication link is a simple twisted-pair wire.

The remote CLD will communicate with up to four UCP2 chillers if an optional board is added to it. The chillers do not have to be the same type (CVHE/F, ABS, RTHB). Each chiller must have the optional IPCB (interprocessor communications buffer) module in order to communicate with the remote CLD.

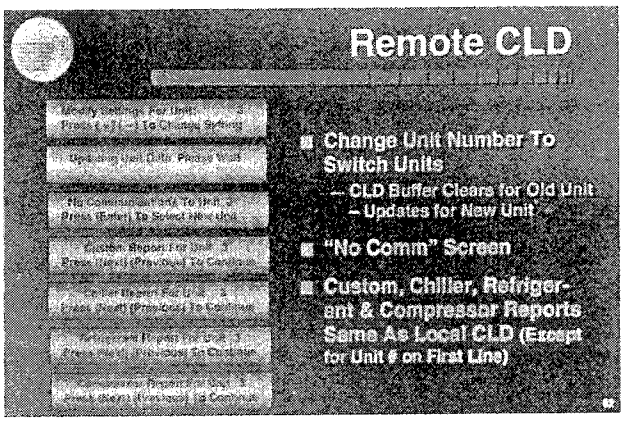

Figure 62

(Figure 62) The displays that appear at the remote CLD are identical to the ones on the unit-mounted CLD except when the "multiple unit" option board is installed. This option enables the remote CLD to communicate with multiple chillers.

When this option is present, the second screen in each group is the Modify Settings for Unit # screen. The operator must enter the number of the chiller being accessed. When the "unit number" is entered, the CLD clears its buffer of data for any other chillers and updates it with the new data.

The Updating Unit Data screen will appear for 5 seconds or until the data is updated, whichever comes first. If data is not received in 5 seconds, the No Communication ... screen appears. Pressing Enter at this time, sends the display back to the first screen above.

When each report or settings group key is pressed, the Report for Unit # or Settings for Unit # screen will be the second screen followed by the Updating Data screen.

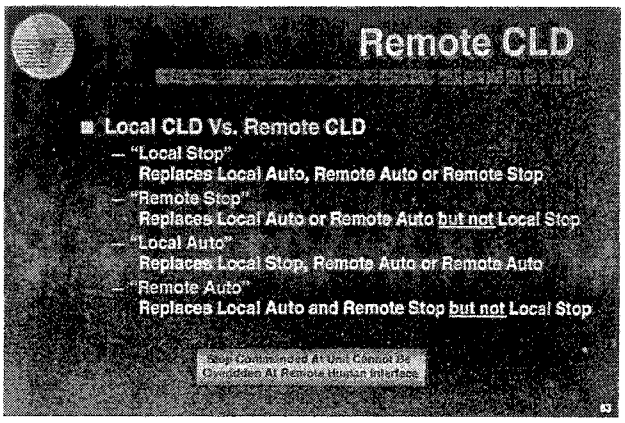

Figure 63

(Figure 63) This slide is provided as a quick review of the UPC2 operating priorities. This is how the UCP determines when an Auto or Stop command will be accepted and stored into memory. The chiller module stores the source of the current Auto or Stop command. If an Auto command is given from the remote CLD when the chiller is "stopped" from the local CLD, the Stop Command at Unit Cannot Be Overidden ... screen shown in this slide is displayed. Local and Remote Stop are highest priority.

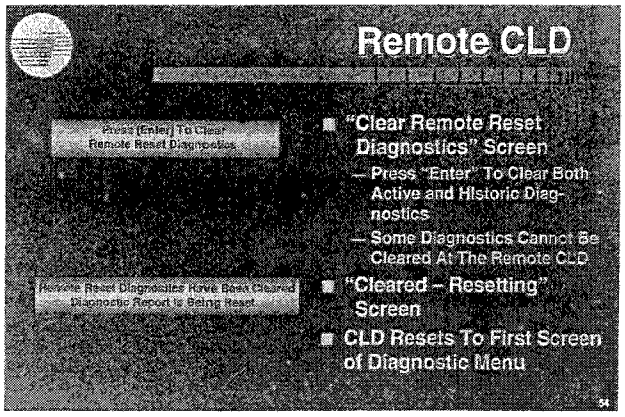

Figure 64

(Figure 64) When using the "clear diagnostic" function at the Diagnostic Menu of the remote CLD, the Press Enter to Clear Remote Diagnostics screen appears. When Enter is pressed, the Remote Reset Diagnostics Have Been Cleared screen appears momentarily, and the display reverts back to the top of the diagnostic menu.

All functions of the chiller-mounted CLD can be accomplished with the remote CLD except for the clearing of certain MMR (manual reset) diagnostics that must be reset at the local CLD on the chiller. Refer to the chiller installation, operation and maintenance manual for a complete list of these diagnostics.

SUMMARY

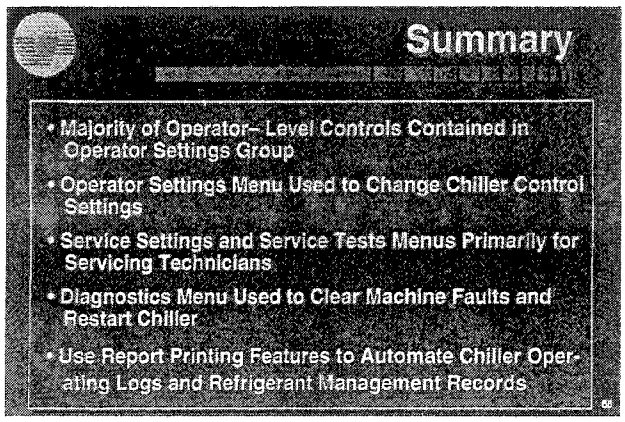

Figure 65

(Figure 65) Most of the control functions that an operator will deal with are located in the Operator Settings menu. There will, of course, be times that it will be necessary to use other portions of the control system. At those times, it will probably be necessary to refer to the IOM literature or consult a service representative.

Factory setup personnel use the Machine Configuration menu of the Service Setting group to establish settings for factory required categories according to the chiller order and design criteria. Once on the job, the setup technician will use the Field Setup menu to tailor the machine to the job.

The only portion of the Service Settings group that the operator will use more or less routinely, is the Basic Setup menu, where the operator can lock and unlock the keypad, change how the CLD displays headings and security menus, set the chiller start and stop differentials, set the chilled water pump delay time, control printer operation and clear the restart inhibit timer.

The operator will have to access the Diagnostic menu in order to look at and clear diagnostics and keep an eye on purge and refrigerant monitor operation.

Finally, with a printer connected, the report printing features of the UCP2 can be used to help keep machine logs, refrigerant usage records, and help pinpoint potential machine problem areas.

The Trane Company
North American Commercial Group
3600 Pammel Creek Road
La Crosse, WI 54601-7599

An American-Standard Company

Since the Trane Company has a policy of continuous product improvement, it reserves the right to change design and specifications without notice.

Library	**E/AV**
Product Section	**ST**
Product	**CTV**
Model	**000**
Literature Type	**MNL**
Sequence	**5**
Date	**10/95**
File No.	**E/AV-ST-CTV-000-MNL5-1095**
Supersedes	**New**
Ordering No.	**ST-MNL-5**

Price: $5.00

Clear Language Display

Water-Cooled, Hermetic CenTraVac®
Clear Language Display for UCP2 and FastPak™ Control Panels

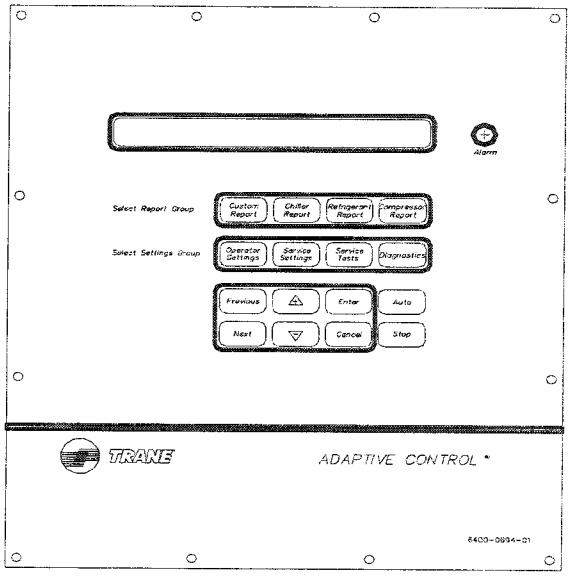

Models
CVHE, CVHF, CVHG, CVRB, CVRC
50 and 60 Hz

Cooling-Only and Heat Recovery, Direct-Drive CenTraVacs with UCP2 Control panels

X39470756-02

CVHE-CLD-1A
June 2000

Contents

General 1

Literature Change History 1
About This Manual 1
LCD Display 1
Keypad 1
LED Alarm 1
Local Clear Language 1

Control System 2

Unit Control Panel 2

Custom Report 3

Custom Report Group 3

ASHRAE Guideline 3 Report 4

Chiller Report 10

Chiller Operating Mode 10
Chiller Operating Mode 12
Active Chilled Water Setpoint/Evap Leaving Water Temp 12
Active Chilled Water Setpoint/Chilled Water Set-point Source 12
Active Ice Termination Setpoint/Ice Termination Setpoint Source 12
Active Hot Wtr Setpoint/Hot Wtr Setpoint Source 12
Evaporator Entering and Leaving Water Temperatures 13
Cond Entering and Leaving Water Temps 13
Active Current Limit Setpoint 13
Active Current Limit Setpoint/Current Limit Setpoint Source 13
Evaporator Water Flow/ Condenser Water Flow 13
Chiller Tons 13
Outdoor Temperature 13
Aux. Bundle or Heat Recovery Temps 13
Chilled Water Setpoint Source 13
Current Limit Setpoint Source 14
Hot Water Setpoint Source 14
Ice Termination Setpoint Source 14

Refrigerant Report 15

Report Heading 15
Evaporator and Condenser Refrigerant Pressure 15
Saturated Evap Temperature/Evap Refrigerant Pressure 15
Saturated Cond Temperature/Cond Refrigerant Press 15
Saturated Evap Temp. and Discharge Temp. .. 15
Purge Operating Mode/Purge Status 15
Purge Alarm Message 15
Purge Suction Temp/Purge Liquid Temp. 16
Purge Pumpout Rate/Purge Max Pumpout Rate 16
Purge Total Pumpout Time/ Purge Total Run Time 16
Purge Adaptive Cycle Time w/Chlr On/Time to Purge Remaining 16
Purge Adaptive Cycle Time w/Chlr Off/Time to Purge Remaining 16
Purge Service Log 16
Pumpout Avg, Last 30 Days 16
Refrigerant Monitor 17
Approach Temperature 17

Compressor Report 18

Report Heading 18
Differential Oil Pressure, Oil Temperature 18
Discharge Oil Pressure, Oil Tank Pressure 18
AF Compressor Speed Command 18
AF Boundary Pressure Coefficient/AF Press. Coefficient 18
AF Re-Optimization Timer Time Remaining 18
Inlet Guide Vane Position 18
Compressor Phase Currents % RLA 19
Compressor Line Currents Amps 19
Compressor Line Voltages 19
Compressor Power Factor and Watts 19
Compressor Winding Temperatures 19
Compressor Starts and Running Time 19
Bearing Temperatures #1 and #2 19
Solid State Starter Heat Sink Temp. 19
HGBP Time 19

Operator Settings 20

Settings Group Keys 20
Operator Settings Group Heading 20
Set Contrast - Applies to CCCLD Display Only. 20

Purge Operating Mode 20
Time Of Day Setting 21
Front Panel Chilled Water Setpoint 21
Front Panel Hot Water Setpoint 22
Front Panel Current Limit Setpoint 22
Print Report 22
Control Type 22
Free Cooling 22
Chilled Water Reset Type 22
Reset Ratio 23
Start Reset Setpoint 23
Maximum Reset Setpoint 23
Ice Building Enable 23
Front Panel Ice Termination Setpoint 23
Ice Making To Normal Cooling Transition Timer 23
Chilled Water Setpoint Source 24
Current Limit Setpoint Source 24
Hot Water Setpoint Source 24
Ice Termination Setpoint Source 24
Outdoor Air Temperature Source 24
Setpoint Source Override 24

Service Settings (Non Password Protected Service Settings Group) 25

Service Setting Group Heading 25
Menu Settings Password 25
Keypad/Display Lockout 26
Language Setting 27
Display Units 27
Decimal Places Displayed Setpoint 27
Display Menu Headings Enable 27
Clear Custom Menu 27
Differential to Start Setpoint 27
Differential to Stop Setpoint 27
Evap/Cond Pump Off Delay Time 28
Printer Setups 28
Clear Restart Inhibit Timer 29

Field Start-up 30

Field Startup 30
Field Start-up Group Heading 30
Keypad/Display Lock Feature Enable 30
Menu Settings Password Enable 30
ICS Address 31
Power Up Start Delay Time 31
Design Delta Temperature Setpoint 31
Leaving Water Temperature Cutout Setpoint ... 31
Low Refrigerant Temperature Cutout Setpoint . 31
Condenser Limit Setpoint 31
Maximum Restart Inhibit (RI) Timer Setting 31
Purge Control/Type 32
Purge Service Log Reset 32
Purge Maximum Pumpout Rate 32
Purge Service Excessive Pumpout Override Timer 32
Purge Low Chiller Sat. Cond. Liquid Temp. Protection Enable 32
Purge Low Chiller Sat. Cond. Temp Setpoint ... 32
Surge Protection Enable 32
Under/Over Voltage Protection Enable 33
Phase Reversal Protection Enable 33
Phase Unbalance Limit Enable 33
Momentary Power Loss (MPL) Protection Enable 33
Enhanced Oil Temp. Protection 33
Oil Temp Setpoint 34
Low Oil Temp Cutout 34
Low Oil Temp Start Inhibit Differential 34
High Discharge Temp Cutout 34
External Base Loading Enable 34
Soft Load Control Enable 34
Soft Load Starting Current Limit 34
Soft Load Current Limit Rate Of Change 34
Soft Load Lvng Wtr Temp Rate of Change 34
Hot Gas Bypass Enable 35
HGBP Timer Enable 35
Maximum HGBP Time 35
HGBP Mode, Vane Target 35
LWT Control Proportional Gain (Kp) Setpt 35
LWT Control Integral Gain (Ki) Setpt 35
LWT Control Derivative Gain (Kd) Setpt 36
IGV Maximum Travel Setpt 36
Guide Vane Closed Travel Stop 36
AF Adjustable Speed Control Algorithm Enable 36
AF Leaving Water Standard Deviation 36
AF Pressure Coefficient Constant 36
AF Re-Optimization Factor 37
AF Re-Optimization Timer 37
AF Boundary Pressure Coefficient Y Intercept . 37
AF Boundary Pressure Coefficient Y Intercept Max 37
AF Pressure Error Deadband 37
AF Proportional Speed Gain 38
Minimum Capacity Timer Enable 38
Time Permitted at Minimum Capacity 38
Evaporator Flow Coefficient 38
Evaporator Flow Equation Exponent 38
Evaporator Fluid Coefficient 38
Condenser Flow Coefficient 38
Condenser Flow Equation Exponent 39
Local Atmospheric Pressure 39
Refrigerant Pressure Analog Output Option 39
Min Delta Pressure Calibration 39
Max Delta Pressure Calibration 39
IGV Stroke Time 39
Low Differential Oil Pressure Cutout 39
Check Oil Filter Diagnostic 40
Check Oil Filter Setpoint 40
Evap Leaving Water Temp Offset 40

Saturated Evap Rfgt Temp Offset 40
Water Pressure Calibration 40

Machine Configuration 41

Service Settings - Machine Configuration 41
Machine Configuration Group Heading 41
Unit Frequency 41
Unit Type 41
Nominal Unit Tons 41
Refrigerant Type 41
Refrigerant Monitor Type 41
Starter Type 42
Startup Contactor Test - Y-D Starters Only 42
Rated Load Amps 42
Motor Heating Constant 42
Current Overload Setting #1 43
Current Overload Setting #2 43
Procedure For Selecting Current Overload Settings for UCP2 43
Maximum Acceleration Timer #1 45
Maximum Acceleration Timer #2 45
Hot Water Control Option 45
Heatsink Start Inhibit Temperature Setpoint (FastPak) 45
External Chilled Water Setpoint Option 45
External Current Limit Setpoint Option 45
External Hot Water Setpoint Option 45
Acceleration Time Out Action 45
Motor Over Temperature Protection 46
Motor Winding RTD Type 46
High Pressure Cutout Setting 46
Line Voltage Sensing Option 46
Unit Line Voltage 46
Auxiliary Condenser Option 46
Heat Recovery Option 46
Hot Gas Bypass Option 46
Free Cooling Option 46
Condenser Pressure Sensor Option 47
Bearing Temperature Sensors Option 47
Discharge Temperature Sensor Option 47
Ice Building Option 47
Differential Water Press Sensing Option 47
External Analog Input Type Selection, 4-20 ma/2-10 VDC 47
Tracer Option 47
TCI Option 47
Printer Option 47
Duplex Control Module (DCM) Option 48
IGV Output Type 48
Oil Pressure Protection 48
Programmable Analog Output 48
Programmable Relay Outputs 48
Current Transducer Setpoint 48
Current Transducer at 100% RLA 48
Compressor Power Source 49

Refrigerant Monitor Settings Group 50

Refrigerant Monitor Settings Group Heading ... 50
Alarm Level 1 50
Alarm Level 2 50
Alarm Level 3 50
Refrigerant Audible Alarm 50
Trouble Audible Alarm 50
Alarm 1 Latching Status 50
Alarm 2 Latching Status 50
Alarm 3 Latching Status 51
Channel Scanner 51
Scanner Channel 1 51
Scanner Channel 2 51
Scanner Channel 3 51
Scanner Channel 4 51
Scanner Dwell Threshold 51
Auxiliary Input 51
Auxiliary Input Alarm 51
Analog Output Range 51

Refrigerant Monitor Calibration 52

Refrigerant Monitor Settings Group Heading ... 52
Refrigerant Monitor Mode 52
Refrigerant Zero Calibration 52
Refrigerant Span Calibration 53

Service Tests Group 55

Service Tools Group Password Request 55
Service Tools Group Heading 56
Chilled Water Pump 56
Chilled Water Flow Switch Status 56
Evaporator Differential Water Pressure 56
Evaporator Entering/Leaving Water Pressure .. 56
Condenser Water Pump 56
Condenser Water Flow Switch Status 56
Condenser Differential Water Pressure 56
Condenser Entering/Leaving Water Pressure .. 56
Starter Dry Run 57
Oil Pump Status 57
Vane Control Status/Vane Position Commands 57
Vane Position 57
HGBP Valve Control Status/Manual Open and Close Commands 57
HGBP Valve Manual Opening/Closing Duty Cycle 58
Vane Control Status/Manual Load and Unload Commands 58
Manual Loading/Unloading Duty Cycle 58
AF Manual Speed Control - CVHE/F/G Only 58
AF Compressor Speed Command - CVHE/F/G Only 58
AF Compressor Speed Command - CVHE/F/G Only 59

AF Boundary Pressure Coefficient/AF Pressure Coefficient - CVHE/F/G Only 59
AF Re-Optimization Timer Time Remaining-CVHE/F/G Only 59
Module Software Revision Levels 59

Diagnostics Menu 60

Diagnostics Group Heading 60
Menu Settings Password 60
Diagnostics and Annunciation 61
Clearing Diagnostics 61
New Diagnostic Display 62
Diagnostics 63

FastPak™ "Settings Group" Menu Record 82

Operator Settings Group: 82

FastPak™ "Settings Group" Menu Record 83

Service Settings Group: Basic Setups 83

FastPak™ "Settings Group" Menu Record 84

Field Startup Group: 84

FastPak™ "Settings Group" Menu Record 86

Machine Configuration Group: 86

FastPak™ "Settings Group" Menu Record 87

Machine Configuration Group: 87

FastPak™ "Settings Group" Menu Record 88

Refrigerant Monitor Settings Group: 88

FastPak™ "Settings Group" Menu Record 89

Service Tests Group: 89

General

Literature Change History

CVHE-CLD-1 (February 1995)

Application of the Clear Language Display to the UCP2 Centravac

CVHE-CLD-1A (June 2000)

Updated information and incorporated FastPak™ items.

About This Manual

This manual describes the application of the Clear Language Display (CLD) to the UCP2 Centravac. It describes its use as a machine-mounted human interface.

A description of the UCP2 reports and message displays are provided along with additional "Help Notes" to clarify the display messages. In addition, a Diagnostics section is also included.

LCD Display

The display on the Clear Language Display is a 2-line by 40-character liquid crystal display (LCD). Upper and lower case alphabetic characters can be displayed, along with numeric and special characters.

LCD Backlight

The LCD display has an LED backlight so it can be read in low light conditions.

Keypad

A sealed dirt-proof keypad is used on the unit mount Clear Language Display. Metal dome switch actuators respond when any key is pressed. See *Figure 1* .

Important! *FACTORY DEFAULT SETTINGS: Menu items that are programmable using the keypad may have a selectable choice that is listed as Factory Default. This Factory Default setting is the software default that is initially factory-programmed for a new module assembly and may NOT be the correct setting for a specific operating chiller. Always review all settings when any module is replaced to verify that the settings agree with the desired settings that were selected at initial startup or programmed at the factory.*

LED Alarm

In addition to the alpha-numeric LCD display, there's a single discrete LED on the human interface. The red LED flashes on-off whenever a latching diagnostic is present and a manual reset is required to restore full unit operation. The LED is also used to indicate that a function or control has been set to manual from within the ***Service Test*** Menu. If a control has been set to manual, the LED is on and non-flashing. A diagnostic supersedes a manual operation. As a result, the unit could have a manual mode set and be in a latching diagnostic. In this case the LED would flash on-off. The LED is off otherwise.

Figure 1
Keypad Matrix

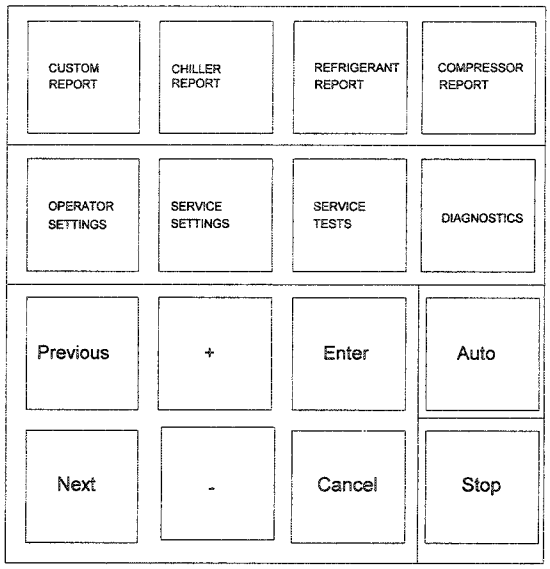

Local Clear Language

The Local CLD "Clear Language Display" resides at the Chiller providing display of chiller data and access to operator/service controls, setpoints, and chiller set-up information. All information is stored in non-volatile memory in the Chiller module. The Local CLD and the Chiller module work together to display and store information requiring non-volatility.

Control System

Unit Control Panel

Safety and operating controls are housed in the UCP2 unit control panel, the starter panel, and the purge control panel.

The UCP2 control is a modular design partitioned by major function or group of functions. All modules (see *Figure 2*) communicate with each other through the Interprocessor Communication Circuit (IPC).

Major components within each control group are shown in the figure.

Unit-mounted temperature sensors, pressure transducers, and functional switches provide analog and binary inputs to the various modules.

The microcomputer-based modules are illustrated in the figure. All wiring to the modules are to pluggable terminal blocks.

Figure 2
UCP2 Control Panel

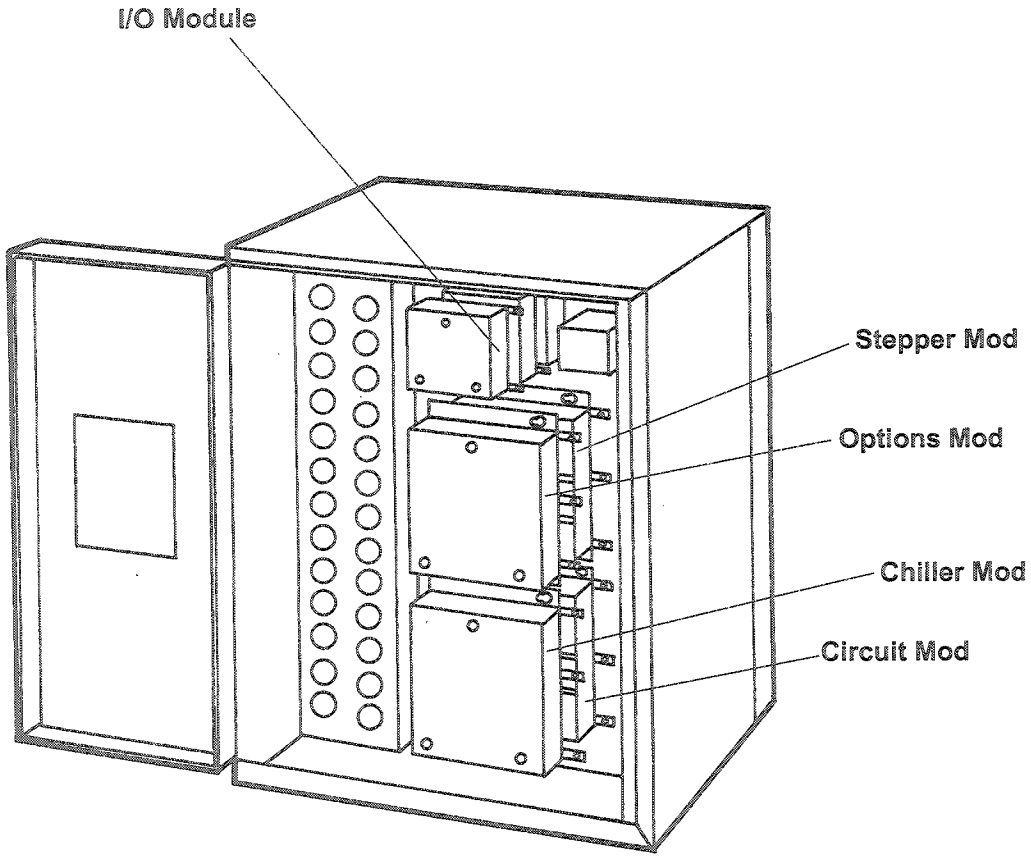

Custom Report

Custom Report Group

Reports are added to the custom report group by pressing the <+> key when the desired report is being displayed from its normal report location. Reports are removed from the custom report group by pressing the <-> key when the desired custom report is being displayed. The Custom report group can contain a maximum of 20 reports. When adding a report to the Custom Report, if the <+> key is pressed when the Custom Report already contains 20 reports, a message, "Custom Report Is Full, Report Not Added," indicating that the Custom Report is full, will be displayed for 2 seconds. If an attempt is made to add a report to the Custom Report that is already in the Custom Report, a message, "Report Already In Custom Menu", will be displayed for 2 seconds.

The Custom Report sequence is as follows:

Report Heading

User Defined Custom Report
Press (Next)(Previous) To Continue

If no entries are selected for the Custom Report, see Empty List Display.

Empty Display List

If no entries are selected for the Custom Report, the second entry is:

No Items Are Selected For Custom Report:
See Operators Manual To Select Entries

The report then wraps around to the report heading when <Next> is pressed.

If there are items selected for the Custom Report, then the empty list display is not used. Instead, the report heading and the selected items are displayed sequentially as <Next> or <Previous> are pressed.

ASHRAE Guideline 3 Report

Press (Enter) For ASHRAE Guideline 3 Rpt
Press (Next)(Previous) To Continue

If <Enter> is pressed the ASHRAE Guideline 3 Report Menu is entered, shown at the end of the Standard Report below. Otherwise, If <Next> is pressed the Standard Report is entered. The ASHRAE Guideline 3 Report Entry screen may be added to Custom Report by pressing the <+> key. Adding it to the Custom Report allows the user to access the ASHRAE Guideline 3 Report from the Custom Menu.

The following are the Standard Report screens, e.g. not part of the ASHRAE Guideline 3 Report.

ASHRAE Guideline 3 Reports

ASHRAE Guideline 3 Report
Press (Next)(Previous) To Continue

Time Of Day/Refrigerant Type

Current Time/Date HH:MM xm Mon,XX XXXX
Refrigerant Type: [type]

Possible values for refrigerant type are: R11, R123, R12, R134a, R22, R113, R114, R500, or R502.

Chiller Operating Mode

The chiller operating modes display comes up first in the standard report:

[Operating mode line 1]
[Operating mode line 2]

Line 1 (and 2 if needed) indicates a current condition of the unit as shown in the following table *(Table 1)* . In some cases, an associated timer or system parameter will be displayed that assures the transition to an expected mode is in progress, particularly during the unit start-up sequence.

Table 1
Operating Modes

Unit Operation	Operating Mode Display* (First Line/Second Line)
Stop	Resetting
	Local Stop: Cannot Be Overridden By Any External Or Remote Device
	Remote Display Stop: Chiller May Be Set To Auto By Any Ext Or Rmt Device
	Remote Run Inhibit From External Source
	Remote Run Inhibit From Tracer
	Heat Sink Temp Start Inhibit
	Diagnostic Shutdown Stop
	Diagnostic Shutdown Auto
Auto	Auto Waiting For Evaporator Water Flow
	Auto Waiting For A Need To Cool
	Waiting For Tracer Communications To Establish Operating Status
	Starting Is Inhibited By Staggered Start Time Remaining: MIN:SEC
	Starting Is Inhibited By Restart Inhibit Timer: Time Remaining MIN:SEC
Initialize	Establishing Cond Water Flow Establishing Oil Pressure
	Establishing Cond Water Flow Prelubrication Time: MIN:SEC
	Cond Water Is Flowing Prelubrication Time: MIN:SEC
	Cond Water Is Flowing Establishing Oil Pressure
	Cond Water Is Flowing Performing IGV BPI Search and Calibration
	Cond Water Is Flowing PreStart Unload Time Remaining: MIN:SEC
Start	Starting Compressor
Run	Unit Is Running
	Unit Is Running Capacity Limited By High Current
Run	Unit Is Running Capacity Limited By Phase Unbalance
	Unit Is Running Capacity Limited By High Cond Press
	Unit Is Running Capacity Limited By Low Evap Temp
	Unit is Running Capacity Limited By Vane Open Travel Stop
	Unit Is Running Minimum Capacity Due To Vane Closed Travel Stop
	Unit Is Running in Surge Condition
	Unit Is Running; Capacity Limited By Pulldown Rate Based Soft Loading
	Unit Is Running; Capacity Limited By Current Based Soft Loading
Auto	Auto Waiting For Condenser Water Flow
Run	Establishing Evap Water Flow Establishing Oil Pressure
	Establishing Evap Water Flow Prelubrication Time: MIN:SEC
	Evap Water Is Flowing Prelubrication Time: MIN:SEC
	Evap Water Is Flowing Performing IGV BPI Search & Calibration
	Establishing Evap Water Flow Performing IGV BPI Search & Calibration
	Unit is Running; Base Loaded
	Unit is Running; Base Loaded Capacity Limited By High Current
	Unit is Running; Base Loaded Capacity Limited By Phase Unbalance
	Unit Is Running; Base Loaded Capacity Limited By High Cond Press
	Unit Is Running; Base Loaded Capacity Limited By Low Evap Temp
	Unit is Running; Base Loaded At Vane Open Travel Stop
	Unit is Running; Base Loaded At Vane Closed Travel Stop
	Unit is Running; Base Loaded In Surge Condition

Unit Operation	Operating Mode Display* (First Line/Second Line)
Run	Unit Is Running; Base Loaded Current Based Soft Loading
	Unit Is Running In Minimum Capacity
	Unit Is Running In Minimum Capacity Time Remaining: MIN:SEC
Run-Unload	Unit Is Preparing To Shutdown
Run-Ice Build	Unit Is Building Ice Capacity Limited By Vane Open Travel Stop
	Unit Is Building Ice
	Unit Is Building Ice Capacity Limited By High Current
	Unit Is Building Ice Capacity Limited By Phase Unbalance
Run-Ice Build	Unit Is Building Ice Capacity Limited By High Cond Press
	Unit Is Building Ice Capacity Limited By Low Evap Temp
	Unit Is Building Ice Surge Has Been Detected
	Ice Building Is Complete
	Unit Is Running; Transitioning Ice Building To Normal MIN:SEC
Post-Lube	Post Lubrication Time Remaining: MIN:SEC
Stop	Panic Stop
	Starter Dry Run

** Displays are not in any sequence. Some displays will never appear, depending on options and situation*

Active Chilled Water Setpoint/Chilled Water Setpoint Source

```
Active Chilled Water Setpoint: xxx.x f/c
[settings source] CWS:    xxx.x f/c
```

Settings source will be one of the following: Front Panel, Tracer, or External Source.

Active Current Limit Setpt/Current Limit Setpt Source

```
Active Current Limit Setpoint: xxx %
[settings source] CLS:          xxx %
```

Settings source will be one of the following: Front Panel, Tracer, External Source, or Ice Building.

Refrigerant Monitor

The following item will be displayed if the Analog Rfgt Monitor is installed.

```
Refrigerant Monitor: xxx.x PPM
Press (Next)(Previous) To Continue
```

The following item will be displayed if the IPC Rfgt Monitor option is installed.

```
Refrigerant Monitor: xxxx PPM R-YYYY
Press (Next)(Previous) To Continue
```

Where (Y) can equal 123, 11, 22, 134a, or 12.

Purge Pumpout Rate/Purge Max Pumpout Rate

The following screen(s) does not appear if the selected Purge Control/Type is "Stand-Alone Purge."

```
Purge Pumpout Rate: xxx.x Min/24Hrs
Purge Max Pumpout Rate: xxx.x Min/24Hrs
```

Purge Total Pumpout Time/ Purge Total Run Time

The following screen(s) does not appear if the selected Purge Control/Type is "Stand-Alone Purge."

Purge Total Pumpout Time: xx,xxx.x Min
Purge Total Run Time: xx,xxx.x Hrs

Purge Operating Mode/Purge Status

The following screen(s) does not appear if the selected Purge Control/Type is "Stand-Alone Purge."

Purge Operating Mode: [Mode]
Purge Status: [Status]

Possible values of [Mode] are: Auto, Stop, On, or Adaptive.

Possible values of [Status] are:

Idle	*(Condensing Unit is Off)*
Running	*(Condensing Unit is On)*
Pumpout	*(Temperature initiated Pumpout)*
Service Pumpout	*(Pumpout initiated by the service switch)*
Running - Pumpout Inhibited By Low Temp.	*(Pumpout inhibited by low liquid temp)*
Pumpout Maximum Rate Disabled	*(Max. Pumpout Rate alarm disabled)*

Saturated Evap Temperature/Evap Refrigerant Pressure Compressor Discharge Temp

Compressor Discharge Temperature shown only if discharge temperature is installed.

Saturated Evap Rfgt Temp: xxx.x f/c
Compressor Discharge Temp: xxx.x f/c

Compressor Starts and Running Time

The starts and hours counters are displayed as follows:

Compressor Starts: xxxxx
Compressor Running Time: HRS:MIN:SEC

Discharge Oil Pressure, Oil Tank Pressure

This screen is only displayed if the "Oil Pressure Protection" setpoint is set to "Transducer" or "Xducer & Switch."

Discharge Oil Pressure: xxx.x psig
Oil Tank Pressure: xxx.x psig

Differential Oil Pressure, Oil Temperature

This screen is only displayed if the "Oil Pressure Protection" setpoint is set to "Transducer" or "Xducer & Switch."

Differential Oil Pressure: xxx.x [units]
Oil Tank Temperature: xxx.x f/c

' Differential Oil Pressure: xxx.x [units]' is only displayed if the "Oil Pressure Protection" setpoint is set to "Transducer" or "Xducer & Switch." If 'Switch' is selected as the setpoint, then ' Differential Oil Pressure Switch: [Status]' is displayed where Status is open or closed.

For FastPak, Differential Oil Pressure: xxx.x [units], this screen is only displayed if the "Oil Pressure Protection Setpoint" is set to "Diff Xducer" If 'Switch' is selected as the setpoint, then ' Differential Oil Pressure Switch: [Status]' is displayed where Status is open or closed.

The Possible value for [units] is "psid" or "kPa" dependent upon whether English or SI units are selected.

Bearing Temperatures #1 and #2

The following will be displayed only if the Bearing Temp Sensors Option is Installed.

Bearing Temperature 1: xxx.x f/c
Bearing Temperature 2: xxx.x f/c

Evaporator Entering and Leaving Water Temperatures

Evap Entering Water Temp: xxx.x f/c
Evap Leaving Water Temp: xxx.x f/c

Saturated Evap Temperature/Evap Refrigerant Pressure

Saturated Evap Rfgt Temp: xxx.x f/c
Evap Rfgt Pressure: xxx.x psig

Evaporator Approach Temp.

Evaporator Approach Temp.: xx.x f/c
Press (Next) (Previous) To Continue

Evaporator Entering/Leaving Water Pressure

The following will be displayed only if the low pressure (< or = to 150 psig) Differential Water Pressure Sensor Option is Installed.

Evap Entering Water Pressure:xx.x psid/kPa
Evap Leaving Water Pressure: xx.x psid/kPa

Evaporator Differential Water Pressure

The following will be displayed only if the Differential Water Pressure Sensor Option is Installed.

Evap Differential Wtr Press: xx.x psid/kPa
Press (Next) (Previous) To Continue

Evaporator Water Flow

The following is displayed only if the Differential Water Sensing Option is installed.

Approx Evaporator Water Flow:xxx.x gpm/lpm
Press (Next) (Previous) To Continue

The possible values for units are "gpm" or "lpm."

Chilled Water Flow Switch Status

The following will be displayed only if the Differential Water Sensing Option is not installed. This screen displays the status of the chilled water flow switch status at the input to the UCM.

Chilled Water Flow Switch Status:
[y]

Possible values for [y] are: Flow Switch is Open/No Flow or Flow Switch is Closed/Flow.

Chiller Tons

The following will be displayed only if the Differential Water Sensing Option is installed.

Approximate Chiller Capacity: xxxx Tons/KW
Press (Next) (Previous) To Continue

The possible values for units are "Tons" or "KW."

Cond Entering and Leaving Water Temps

Dashes will be displayed for condenser entering or leaving water temperature if the corresponding input is open or shorted.

Cond Entering Water Temp: xxx.x f/c
Cond Leaving Water Temp: xxx.x f/c

Saturated Cond Temperature/Cond Refrigerant Press

Saturated Cond Temp: xxx.x f/c
Cond Rfgt Pressure: xxx.x psig

Condenser Approach Temp.

Condenser Approach Temp.: xx.x f/c
Press (Next) (Previous) To Continue

Condenser Entering/Leaving Water Pressure

The following will be displayed only if the low pressure (< or = to 150 psig) Differential Water Pressure Sensor Option is Installed.

Cond Entering Water Pressure:xx.x psid/kPa
Cond Leaving Water Pressure: xx.x psid/kPa

Condenser Differential Water Pressure

The following will be displayed only if the Differential Water Pressure Sensor Option is Installed.

Cond Differential Wtr Press: xx.x psid/kPa
Press (Next) (Previous) To Continue

Condenser Water Flow

The following will be displayed only if the Differential Water Sensing Option is installed.

Approx Condenser Water Flow: xxx.x gpm/lpm
Press (Next)(Previous) To Continue

The possible values for units are "gpm" or "lpm."

Condenser Water Flow Switch Status

The following screen is displayed only if the Differential Water Pressure Sensor Option is not Installed. This screen displays the status of the condenser water flow switch status at the input to the UCM.

Condenser Water Flow Switch Status:
[y]

Possible values for [y] are Flow Switch is Open/No Flow or Flow Switch is Closed/Flow

Aux. Bundle or Heat Recovery Temps

The following will be displayed only if either the Heat Recovery Option or Aux Condenser Option is installed.

Aux/Heat Rcvy Ent Wtr Temp: xxx.x f/c
Aux/Heat Rcvy Lvg Wtr Temp: xxx.x f/c

Chiller Report

The Chiller Report sequence is as follows:

Chiller Status, Water Temps & Setpts
Press (Next)(Previous) To Continue

Chiller Operating Mode

Friendly mode line 1

Friendly mode line 2

Friendly mode line 1 is indicative of a unit mode. Friendly mode line 2 is usually a verbal continuation of line 1 and can be viewed as a continuous message along with line 1. In some cases Friendly mode line 2 is the display of an associated timer or system parameter.

[Friendly mode] will be one of the following:

Friendly Mode (First Line/second Line)
Display is Blank
Resetting
Local Stop: Cannot Be Overridden By Any External Or Remote Device
Remote Display Stop: Chiller May Be Set To Auto By Any Ext Or Rmt Device
Remote Run Inhibit From Remote Computer
Remote Run Inhibit From External Source
Remote Run Inhibit From Tracer
Run Inhibit From DCM
Heat Sink Temperature Start Inhibit
Diagnostic Shutdown Stop
Diagnostic Shutdown Auto
Auto *Waiting For Evaporator Water Flow*
Auto *Waiting For A Need To Cool*
Auto *Waiting For A Need To Heat*
Waiting For Tracer Communications To Establish Operating Status
Starting Is Inhibited By Staggered Start Time Remaining: MIN:SEC
Transitioning To Free Cooling *Waiting For Cond Water Flow*
Opening Free Cooling Valves *Cond Water Is Flowing*
Closing Free Cooling Valves
Unit Running; Last Mode Free Cooling Limit Time Remaining To End Of Limit: MIN:SEC
Transitioning To Free Cooling *Waiting For IGV Positioning To Complete*
Unit Is Free Cooling
Starting Is Inhibited By Restart Inhibit Timer: Time Remaining MIN:SEC
Establishing Cond Water Flow *Establishing Oil Pressure*
Establishing Cond Water Flow *PreLubrication Time: MIN:SEC*
Cond Water Is Flowing *Establishing Oil Pressure*
Starting
Unit Is Running

Unit Is Running Capacity Limited By High Current
Unit Is Running Capacity Limited By Phase Unbalance
Unit Is Running Capacity Limited By High Cond Press
Unit Is Running Capacity Limited By Low Evap Temp
Unit Is Running; Capacity Limited By Vane Open Travel Stop
Unit is Running; Minimum Capacity Due To Vane Closed Travel Stop
Unit Is Running In Surge Condition
Unit Is Running; Capacity Limited By Pulldown Rate Based Soft Loading
Unit Is Running; Capacity Limited By Current Based Soft Loading
Unit Is Running; Hot Water Control
Unit Is Running; Hot Water Control Capacity Limited By High Current
Unit Is Running; Hot Water Control Capacity Limited By Phase Unbalance
Unit Is Running; Hot Water Control Capacity Limited By High Cond Press
Unit Is Running; Hot Water Control Capacity Limited By Low Evap Temp
Unit Is Running; Hot Water Control At Vane Open Travel Stop
Unit is Running; Hot Water Control At Vane Closed Travel Stop
Unit Is Running; Hot Water Control In Surge Condition
Unit Is Running; Hot Water Control Pulldown Rate Based Soft Loading
Unit Is Running; Hot Water Control Current Based Soft Loading
Unit is Running; Base Loaded
Unit is Running; Base Loaded Capacity Limited By High Current
Unit is Running; Base Loaded Capacity Limited By Phase Unbalance
Unit Is Running; Base Loaded Capacity Limited By High Cond Press
Unit Is Running; Base Loaded Capacity Limited By Low Evap Temp
Unit Is Running; Base Loaded At Vane Open Travel Stop
Unit is Running; Base Loaded At Vane Closed Travel Stop
Unit Is Running; Base Loaded In Surge Condition
Unit Is Running; Base Loaded Pulldown Rate Based Soft Loading
Unit Is Running; Base Loaded Current Based Soft Loading
Unit Is Running In Hot Gas Bypass
Unit Is Running In Minimum Capacity Time Remaining: HR:MIN:SEC
Unit Is Preparing To Shutdown

Chiller Operating Mode

The chiller operating modes display comes up first in the standard report:

[Operating mode line 1]
[Operating mode line 2]

Line 1 (and 2 if needed) indicates a current condition of the unit as shown in the preceding table *(Table 1)* . In some cases, an associated timer or system parameter will be displayed that assures the transition to an expected mode is in progress, particularly during the unit start-up sequence.

Active Chilled Water Setpoint/Evap Leaving Water Temp

Active Chilled Water Setpoint:xxx.x f/c
Evap Leaving Water Temp: xxx.x f/c

If the chiller is in the Ice Making or Ice Making Complete state, the following display is substituted for the above display:

Active Ice Termination Setpoint: xxx.x f/c
Evap Entering Water Temp: xxx.x f/c

If the chiller is in the hot water control state, the following display is substituted for the above display:

Active Hot Water Setpoint: xxx.x f/c
Cond Leaving Water Temp: xxx.x f/c

Active Chilled Water Setpoint/Chilled Water Setpoint Source

Active Chilled Water Setpoint: xxx.x f/c
[settings source]CWS: xxx.x f/c

Settings source will be one of the following: Front Panel, Tracer, External Source, or Duplex Control.

Active Ice Termination Setpoint/Ice Termination Setpoint Source

The following will be displayed only if the Ice Building Option is installed.

Active Ice Termination Setpoint: xxx.x f/c
[settings source] ITS: xxx.x f/c

Settings source will be one of the following: Front Panel or Tracer.

Active Hot Wtr Setpoint/Hot Wtr Setpoint Source

The following will be displayed only if the Hot Water Control Option is Installed.

Active Hot Water Setpoint: xxx.x f/c
[settings source] HWS: xxx.x f/c

Settings source will be one of the following: Front Panel, Tracer, or External Source.

Evaporator Entering and Leaving Water Temperatures

Evap Entering Water Temp: xxx.x f/c
Evap Leaving Water Temp: xxx.x f/c

Cond Entering and Leaving Water Temps

Dashes will be displayed for condenser entering or leaving water temperature if the corresponding input is open or shorted.

Cond Entering Water Temp: xxx.x f/c
Cond Leaving Water Temp: xxx.x f/c

Active Current Limit Setpoint

Active Current Limit Setpoint: xxx %
Press (Next)(Previous) To Continue

Active Current Limit Setpoint/Current Limit Setpoint Source

Active Current Limit Setpoint: xxx %
[settings source] CLS: xxx %

Settings source will be one of the following: Front Panel, Tracer, External Source, or Ice Building.

Evaporator Water Flow/ Condenser Water Flow

The following will be displayed only if the Differential Water Sensing Option is installed.

Approx Evaporator Water Flow:xxx.x gpm/lpm
Approx Condenser Water Flow: xxx.x gpm/lpm

The possible values for units are "gpm" or "lpm."

Chiller Tons

The following will be displayed only if the Differential Water Sensing Option is installed.

Approximate Chiller Capacity: xxxx Tons/KW
Press (Next)(Previous) To Continue

The possible values for units are "Tons" or "KW."

Outdoor Temperature

If the outdoor air temperature input is open or shorted and neither Outdoor Air Reset nor Low Ambient Lockout is enabled, display "------" in place of "xxx.x F." Otherwise the temperature received from the chiller module is displayed.

Outdoor Air Temperature: xxx.x f/c
Press (Next)(Previous) To Continue

Aux. Bundle or Heat Recovery Temps

The following will be displayed only if either the Heat Recovery Option or Aux Condenser Option is installed.

Aux/Heat Rcvy Ent Wtr Temp: xxx.x f/c
Aux/Heat Rcvy Lvg Wtr Temp: xxx.x f/c

Chilled Water Setpoint Source

Chld Wtr Setpt Source: [settings source]
Reset Condition: [reset condition]

Settings source will be one of the following: Front Panel, Tracer, or External Source.

Reset condition will be one of the following: None, Outdoor Temp, or Return Wtr Temp.

Current Limit Setpoint Source

Cur Lim Setpt Source: [settings source]
Press (Next) (Previous) To Continue

Settings source will be one of the following: Front Panel, Tracer, External Source, or Ice Building.

Hot Water Setpoint Source

The following will be displayed only if Hot Water Control is Installed.

Hot Water Setpt Source: [settings source]
Press (Next) (Previous) To Continue

Settings source will be one of the following: Front Panel, Tracer, or External Source.

Ice Termination Setpoint Source

The following will be displayed when/if remote computer is installed.

Ice Termn Setpt Source: [settings source]
Press (Next) (Previous) To Continue

Settings source will be one of the following: Front Panel or Tracer.

Refrigerant Report

Report Heading

Refrigerant Temp & Pressure Report
Press (Next)(Previous) To Continue

Evaporator and Condenser Refrigerant Pressure

Evap Rfgt Pressure: xxx.x psig
Cond Rfgt Pressure: xxx.x psig

Saturated Evap Temperature/Evap Refrigerant Pressure

Saturated Evap Temp: xxx.x f/c
Evap Rfgt Pressure: xxx.x psig

Saturated Cond Temperature/Cond Refrigerant Press

Saturated Cond Temp: xxx.x f/c
Cond Rfgt Pressure: xxx.x psig

Saturated Evap Temp. and Discharge Temp.

The Discharge Temp will be displayed only if the Discharge Sensor Option is installed.

Saturated Evap Rfgt Temp: xxx.x f/c
Compressor Discharge Temp: xxx.x f/c

Purge Operating Mode/Purge Status

The following screen(s) does not appear if the selected Purge Control/Type is "Stand-Alone Purge."

Purge Operating Mode: [Mode]
Purge Status: [Status]

Possible values of [Mode] are: Auto, Stop, On, or Adaptive.

Possible values of [Status] are:

Idle	*(Condensing Unit is Off)*
Running	*(Condensing Unit is On)*
Pumpout	*(Temperature Initiated pumpout)*
Service Pumpout	*(Pumpout initiated by service switch)*
Running - Pumpout inhibited by low temp.	*(Pumpout inhibited by low liquid temp)*
Pumpout Maximum Rate Disabled	*(Max. pumpout rate alarm disabled)*

Purge Alarm Message

The following screen(s) is not displayed if the selected Purge Control/Type is "Stand-Alone Purge."

Purge Alarm Msg: [Status]
[Help Message]

Possible values for [Status] are: No Diagnostics Present (the [Help Message] is: Press (Next) (Previous) To Continue) or Diagnostic Alarm (the [Help Message] is: Go to Diag. Menu for Description/ Reset).

Purge Suction Temp/Purge Liquid Temp.

The following screen(s) does not appear if the selected Purge Control/Type is "Stand-Alone Purge."

Purge Suction Temp: xxx.x f/c
Purge Liquid Temp: xxx.x f/c

Purge Pumpout Rate/Purge Max Pumpout Rate

The following screen(s) does not appear if the selected Purge Control/Type is "Stand-Alone Purge."

Purge Pumpout Rate: xxx.x Min/24Hrs
Purge Max Pumpout Rate: xx.x Min/24Hrs

Purge Total Pumpout Time/ Purge Total Run Time

The following screen(s) does not appear if the selected Purge Control/Type is "Stand-Alone Purge."

Purge Total Pumpout Time: xx,xxx.x Min
Purge Total Run Time: xx,xxx.x Hrs

Purge Adaptive Cycle Time w/Chlr On/ Time to Purge Remaining

The following screen(s) does not appear if the selected Purge Control/Type is "Stand-Alone Purge."

Purge Adapt Cycle T w/Chlr On: xxx.x Hrs
Time To Purge Remaining: xxx.x Hrs

If the mode selected is not Adaptive, then the time in the bottom line is dashed out.

Purge Adaptive Cycle Time w/Chlr Off/ Time to Purge Remaining

The following screen(s) does not appear if the selected Purge Control/Type is "Stand-Alone Purge."

Purge Adapt Cycle T w/Chlr Off: xxx.x Hrs
Time To Purge Remaining: xxx.x Hrs

If the mode selected is not Adaptive, then the time in the bottom line is dashed out.

Purge Service Log

The following screen(s) does not appear if the selected Purge Control/Type is "Stand-Alone Purge."

Service Log: Reset Log In Field Start_Up
Purge Pumpout Time: xxxxxxx.x Pumpout Min

Service Log: Reset Log In Field Start_Up
Time Since Last Rst: xxxx Cal Days

Pumpout Avg, Last 30 Days

The following screen(s) does not appear if the selected Purge Control/Type is "Stand-Alone Purge."

30 Day Purge Pumpout Avg: xxx.x Min
Chiller Average Run Time: xxx.x Hr/Day

30 Day Pumpout Avg,
Chiller Running: xxx.x Min

Last 5 Cycle Pumpout Avg, Interval From Shtdn To 3 Hrs After Shtdn: xxx.x Min

30 Day Pumpout Avg, Interval From 3Hrs After Shtdn To Next Start: xxx.x Min

Refrigerant Monitor

The following item is displayed if the Analog Refrigerant Monitor option is installed.

Refrigerant Monitor: xxx.x PPM
Press (Next)(Previous) To Continue

The following items are displayed if the IPC Refrigerant Monitor option is installed.

The following screen is displayed if the refrigerant monitor scanner is installed:

Refrigerant Monitor Mode: [Mode]
Scanner Channel X XXXX PPM [Rfgt Type]

The following screen is displayed if the channel scanner is not installed:

Refrigerant Monitor Mode: [Mode]
XXXX PPM [Rfgt Type]

Possible values of Mode are: Warmup, Ready, Monitor Check, Trouble.

If the PPM is out of range low or high "-Err" and "++++" respectively are displayed. If the concentration has not been determined, or the refrigerant monitor is in "Monitor Check" mode, "-----" is displayed.

The following is displayed if the channel scanner option is installed.

Last Rfgt Conc Chan1 Chan2 Chan3 Chan4
PPM [Rfgt Type] XXXX XXXX XXXX XXXX

If the PPM is out of range low or high "-Err" and "++++" respectively are displayed. If a channel is inactive, "-----" is displayed.

Refrigerant Monitor Case Temp: XXX.X F
Refrigerant Monitor Bench Temp: XXX.X F

The following is displayed if the IPC Refrigerant Monitor Auxiliary input option is installed.

Rfgt Mon Auxiliary Input: XX.X mA
Press (Next) (Previous) To Continue

Approach Temperature

Evaporator Approach Temp: XXX.X F
Condenser Approach Temp: XXX.X F

Compressor Report

The Compressor Report Group sequence is as follows.

Report Heading

Compressor Hours, Starts & Amps
Press (Next)(Previous) To Continue

Differential Oil Pressure, Oil Temperature

Differential Oil Pressure: xxx.x [units]
Oil Tank Temperature: xxx.x f/c

The possible value for [units] is "psid" or "kPa" dependent upon whether English or SI units are selected.

Discharge Oil Pressure, Oil Tank Pressure

Discharge Oil Pressure:	xxx.x psig
Oil Tank Pressure:	xxx.x psig

AF Compressor Speed Command

The following is displayed only if the Starter Type is "Adaptive Frequency" or "AFDB" or the Compressor Power Source is Engine/Generator and Adaptive Speed Control Algorithm is Enabled.

AF Compressor Speed Command:	xx Hz
AF Compressor Speed Command:	xxxx RPM

Range of values is 2520 to 3600 rpm in increments of 1 rpm. Factory default is 3600 rpm.

AF Boundary Pressure Coefficient/AF Press. Coefficient

The following is displayed only if the Starter Type is "Adaptive Frequency" or "AFDB" or the Compressor Power Source is Engine/Generator and Adaptive Speed Control Algorithm is Enabled.

AF Boundary Press Coefficient:	x.xxx
AF Pressure Coefficient:	x.xxx

Note: This is a Report only for Troubleshooting purposes.

AF Re-Optimization Timer Time Remaining

The following is displayed only if the Starter Type is "Adaptive Frequency" or "AFDB" or the Compressor Power Source is Engine/Generator and Adaptive Speed Control Algorithm is Enabled.

AF Re-Optimization Time Remaining:xx:xxHrs
Press (Next) (Previous) to Continue

Note: This is a Report only for Troubleshooting purposes.

Inlet Guide Vane Position

This screen does not appear if "Inlet Guide Vane Output" is set to "Pulsed."

Inlet Guide Vane Position xxx.x % Open
Inlet Guide Vane Position xx.x degrees

Compressor Phase Currents % RLA

Compressor Phase Currents - % RLA
A xxxx.x % B xxxx.x % C xxxx.x %

Compressor Line Currents Amps

Compressor Phase Currents - Amps
A xxxx amps B xxxx amps C xxxx amps

Compressor Line Voltages

Compressor Line Voltages
AB xxxx v BC xxxx v CA xxxx v

This data is displayed only if the line voltage sensing option is installed. if not installed, no screen is displayed.

Compressor Power Factor and Watts

The following is displayed only if the Line Voltage Sensing Option is Installed AND the starter type is Not "Adaptive Frequency" or AFD AND Compressor Power Source is Utility AND External KW is Not Installed.

Compressor Power Factor: xx %
Compressor KiloWatts: xxxx KW

Compressor Winding Temperatures

Compressor Winding Temperatures
W1 xxx f/c W2 xxx f/c W3 xxx f/c

Compressor Starts and Running Time

The starts and hours counters are displayed as follows:

Compressor Starts: xxxxx
Compressor Running Time: HRS:MIN:SEC

Bearing Temperatures #1 and #2

The following will be displayed only if the Bearing Temp Sensors Option is Installed.

Bearing Temperature 1: xxx.x f/c
Bearing Temperature 2: xxx.x f/c

Solid State Starter Heat Sink Temp.

The following will be displayed only if the Solid State Starter is installed.

Solid State Starter Heat Sink: xxx.x f/c
Press (Next)(Previous) To Continue

HGBP Time

If HGBP is installed in the unit the following screen is displayed:

HGBP Time: HRS:MIN:SEC
Press (Next)(Previous) To Continue

Operator Settings

Settings Group Keys

The four settings Group Keys for CVHE/CVHF/ CVHG are as follows:

- **Operator Settings** - non-password protected menu items that can be changed by the operator
- **Service Settings** - menu items that should only be changed by a qualified service technician
- **Service Tests** - activate outputs of Chiller (e.g. oil pump)
- **Diagnostics** - abnormal operating conditions, informational warnings, automatic reset, and manual reset types and other information.

Operator Settings Group Heading

Important! *FACTORY DEFAULT SETTINGS: Menu items that are programmable using the keypad may have a selectable choice that is listed as Factory Default. This Factory Default setting is the software default that is initially factory-programmed for a new module assembly and may NOT be the correct setting for a specific operating chiller. Always review all settings when any module is replaced to verify that the settings agree with the desired settings that were selected at initial startup or programmed at the factory.*

The Operator Settings Group sequence follows.

Chilled Water & Current Limit Setpts
Press (Next)(Previous) To Continue

If the Menu Settings Password feature is Enabled in the Service Setup Group following each setting group heading the following is displayed:

Settings In This Menu Are [status]
[password message]

Likewise, if the Menu Settings Password is Disabled in the Service Setup Group, the above screen will not appear.

The possible values for status are "Locked" or "Unlocked". If the password status is locked, the password message will be "Enter Password to Unlock". The user will then depress **(-)(+)(-)(+)(-)(+)** followed by the <Enter> key. The password keystrokes will be echoed to the screen as a visual aide. The last six keystrokes represent the current password, and up to twenty keystrokes can be entered. An incorrect password, or the twenty-first keystroke will result in the password message "Invalid Password".

If the password status is unlocked, the password message will be "Press (Enter) to Lock". Pressing <Enter> locks the settings in ALL the menus. If the password is entered to unlock the settings, this unlocks the settings in ALL menus.

Whenever a password is in use the "Press (+)(-) to change setting" message will be suppressed on setpoint screens. Any attempt to change the setting will result in the message "Setting is Locked". The password once entered will remain valid until canceled.

Set Contrast - Applies to CCCLD Display Only.

Set Contrast: Press (√) to Save
Press (+)(-) to Change Setting

Purge Operating Mode

The following screen(s) does not appear if the selected Purge Control/Type is "Stand-Alone Purge."

Purge Operating Mode: [Mode]
Press (+)(-) to Change Setting

Possible values of [Mode] are: Stop, On, Auto (Factory Default) and Adaptive.

Time Of Day Setting

Current Time/Date HH:MM xm Mon,XX XXXX
(Enter) to Change : (Next) to Continue

The top level "CurrentTime/Date" will be displayed when this screen is first selected. Pressing the <Next> or <Previous> key will go to the next or previous screen as usual.

If the <Enter> key is selected, five separate screens can be displayed with which the time may be set. The "Current Time/Date" will be displayed on line one of each of these screens. Each of these screens will change one element of the current time/date. The second line of each screen will indicate which element of the current time/date is being changed.

If the first time changing screen is being displayed and the <Previous> key is pressed, the top level "Current Time/Date" screen will be displayed and the <Enter> key will have to be selected to re-enter the time changing screens. If the fifth time changing screen is being displayed and the <Next> key is pressed, the next screen will be displayed. If <Previous> is selected at this point, the top level "Current Time/Date" screen will be displayed and the <Enter> key will have to be selected to re-enter the time changing screens

To change an element of the current time/date, select <Enter> from the top level "Current Time/Date" screen to enter the time changing screens. Hit <Next> or <Previous> to get to the proper screen. Press the <+> <-> keys to change the element to it's proper value and press the <Enter> key to store the new time/date. A message "Updating Chiller Clock, Please Wait" is displayed for two seconds after the <Enter> key is pressed.

The five time changing screens are as follows:

Current Time/Date HH:MM xm Mon XX,XXXX
To Change Hour, Press (+)(-) & (Enter)

Current Time/Date HH:MM xm Mon XX,XXXX
To Change Minute,Press (+)(-) &(Enter)

Current Time/Date HH:MM xm Mon XX,XXXX
To Change Month, Press(+)(-) & (Enter)

Current Time/Date HH:MM xm Mon XX,XXXX
To Change Day, Press (+)(-) & (Enter)

Current Time/Date HH:MM xm Mon XX,XXXX
To Change Year, Press (+)(-) & (Enter)

Front Panel Chilled Water Setpoint

Front Panel Chilled Wtr Setpt:xxx.x f/c
Press (+)(-) to Change Setting

Range of values is 0 to 65°F (-17.8 to 18.3°C) in increments of 1 or 0.1°F or °C depending on the Service Setup Screen xxx or xxx.x. Factory Default is 44.0°F (6.7°C).

As shown above, the second line of a setting display normally says:

"Press (+)(-) to Change Setting"

However, the following is displayed as the second line of the display if an attempt is made to increment the setpoint above the end of the setpoint range:

"Top of Range, Press (-) to Change"

The following is displayed as the second line of the display if an attempt is made to decrement the display below the end of the setpoint range:

"Bottom of Range, Press (+) to Change"

The following is displayed as the second line of the display if a key other than <+>, <->, <Enter>, or <Cancel> is pressed after <+> or <-> is pressed:

"Press (+)(-)(Enter)(Cancel) to Advance"

The exception to the above message is when the <Stop> key is pressed. <Stop> is always active.

Other messages are displayed on the second line of the display for special cases as noted below in association with the affected setpoint display.

When the Front Panel Chilled Water Setpoint is within 1.7°F of the Leaving Water Temperature Cutout Setpoint, the second line of this display will read:

"Limited by Cutout Setpt, (+) to Change"

Front Panel Hot Water Setpoint

The Front Panel Hot Water Setpoint is only displayed when the Hot water option is Installed.

Front Panel Hot Wtr Setpt: xxx.x f/c
Press (+)(-) to Change Setting

Range of values is 85 to 140°F (37.8 to 60.0°C) in increments of 1 or 0.1°F or °C depending on the Service Setup Screen xxx or xxx.x. Factory Default is 130°F (54.4°C).

Front Panel Current Limit Setpoint

Front Panel Current Limit Stpt: xxx %
Press (+)(-) to Change Setting

Range of values is 40 to 100% in increments of 1 %. Factory Default is 100%.

Print Report

This screen is shown only when the Printer Option is Installed.

Press (Enter) to Print Report
Press (Next)(Previous) To Continue

When <Enter> is pushed, a 2 second message appears as shown below and then returns to the above screen.

The Print Command is Being Sent to the Printer

Control Type

The following will be displayed only if the Hot Water Control Option is Installed.

Control Type is: [control]
Press (+)(-) to Change Setting

Possible values of [control] are: Chilled Water (Factory Default), Hot Water, and Ext. Hot/Chilled Wtr Input.

Free Cooling

The free cooling enable screen is displayed only if the free cooling option is installed.

Free Cooling: [Status]
Press (+)(-) to Change Setting

Possible values are: Disable (Factory Default) and Enable.

Chilled Water Reset Type

Chilled Water Reset Type: [type]
Press (+)(-) to Change Setting

The possible values for [type] are: Disable (Factory Default), Return, Constant Return, and Outdoor Air.

If either Disable or Constant Return are selected, the remaining chilled water reset displays are skipped by the CLD. If either Return or Outdoor Air are selected, the first word of the remaining chilled water reset displays will be the type of reset.

Help Notes:

1. When CWR is enabled, the UCM will step to CWS at a rate of 1°F every five minutes.
2. Constant Return is a short version of Return CWR; it will reset the leaving chilled water setpoint to provide a constant entering water temperature. The reset ratio defaults to 100%, start rest point to design delta T and max reset setpoint to design.
3. Chilled water is reset based on either return water temperature or outdoor air temperature.
4. This screen does not appear when the chiller is under Duplex Control and it is Compressor B.

Reset Ratio

This is the aggressive value. A higher number is a quicker response.

[type] Reset Ratio: xxx %
Press (+)(-) to Change Setting

The values for Reset Ratio for each of the reset types are:

Reset Type	Reset Ratio Range	Increment (Eng. units)	Increment (SI)	Default Value
Return	*10 to 120%*	*1%*	*1%*	*50%*
Outdoor	*80 to -80%*	*1%*	*1%*	*10%*

Start Reset Setpoint

This is the Delta T the unit is trying to maintain.

[type] Start Reset Setpoint: xxx.x F
Press (+)(-) to Change Setting

The values for Start Reset for each of the reset types are:

Reset Type	Start Reset Range	Increment (Eng. units)	Increment (SI)	Default Value
Return	*4 to 30°F (2.2 to 16.7°C)*	*1°F*	*1°C*	*10°F (5.6°C)*
Outdoor	*50 to 130°F (10 to 54.4°C)*	*1°F*	*1°C*	*90°F (32.2°C)*

Maximum Reset Setpoint

Controllable Maximum Reset value. Allows a reset "Up" of this value. The chilled water is maintained between the leaving chilled water setpoint and the new reset value.

[type] Max Reset Setpoint: xxx.x F
Press (+)(-) to Change Setting

The values for Maximum Reset for each of the reset types are:

Reset Type	Maximum Reset Range	Increment (Eng. units)	Increment (SI)	Default Value
Return	*0 to 20°F (0.1 to 11.1°C)*	*1°F*	*1°C*	*5°F (2.8°C)*
Outdoor	*0 to 20°F (0.1 to 11.1°C)*	*1°F*	*1°C*	*5°F (2.8°C)*

Ice Building Enable

The following will be displayed only if the ice building option is installed.

Ice Building: [d/e]
Press (+)(-) to Change Setting

Possible values of [d/e] are: Disable (Factory Default) and Enable.

Front Panel Ice Termination Setpoint

The following will be displayed only if ice building option is installed.

Panel Ice Termination Setpoint:xxx.x f/c
Press (+)(-) to Change Setting

Range of values is 20.0 to 32.0°F (-6.7 to 0.0°C) in increments of 1 or 0.1°F or °C depending on the Service Setup Screen xxx or xxx.x. Factory Default is 27.0°F (-2.8°C).

Ice Making To Normal Cooling Transition Timer

The following will be displayed only if the ice building option is installed. This allows for a timed idle/stop period for (X) minutes when coming out of ice before going into the cooling mode (timed by Chiller).

Ice-To-Normal Cooling Timer: xx min
Press (+)(-) to Change Setting

Range of values is 0 to 10 min. Factory Default is 5 min.

Chilled Water Setpoint Source

If the Tracer Option is installed, the word "Default" will appear in front of the setpoint source.

[Default] Chilled Water Setpoint Source:
[source]

Possible values of [source] are: Front Panel (Factory Default) and External Source (This choice shows up only if the External Chilled Water Setpoint is Installed at the Machine Configuration menu.).

Note: There is a Tracer installed screen in the Machine configuration menu. If Tracer does not choose to write a setpoint then the "default" setpoint source is used, e.g. Front Panel.

Current Limit Setpoint Source

If the Tracer Option is installed, the word "Default" will appear in front of the setpoint source.

[Default] Current Limit Setpoint Source:
[source]

Possible values of [source] are: Front Panel (Factory Default), and External Source. (This choice shows up only if the External Current Limit Setpoint is Installed at the Machine Configuration menu.)

Note: There is a Tracer installed screen in the Machine configuration menu. If Tracer does not choose to write a setpoint then the "default" setpoint source is used, e.g. Front Panel.

Hot Water Setpoint Source

If the Tracer Option is installed, the word "Default" will appear in front of the setpoint source.

[Default] Hot Water Setpoint Source:
[source]

Possible values of [source] are: Front Panel (Factory Default) and External Source (This choice shows up only if the External Hot Water Setpoint is Installed at the Machine Configuration menu.)

Note: There is a Tracer installed screen in the Machine configuration menu. If Tracer does not choose to write a setpoint then the "default" setpoint source is used, e.g. Front Panel.

Ice Termination Setpoint Source

The following will be displayed only if the Ice Building Option is installed.

If the Tracer Option is installed, the word "Default" will appear in front of the setpoint source.

[Default] Ice Termination Setpoint Source:
[source]

Possible values of [source] are: Front Panel (Factory Default).

Note: There is a Tracer installed screen in the Machine configuration menu. If Tracer does not choose to write a setpoint then the "default" setpoint source is used, e.g. Front Panel.

Outdoor Air Temperature Source

If the Tracer is installed the Tracer Outdoor Air Temp. is both used and displayed. If no Tracer is installed the chiller module outdoor air temperature sensor is used. If no sensor is installed, dashes are displayed on the display of Outdoor Air Temperature.

Setpoint Source Override

Setpoint Source Override:
[source]

Possible values of [source] are: "None" (Factory Default), "Use Front Panel Setpoints", "Override Tracer, and Use Default Setpoints" (Available only if Tracer Option installed).

Service Settings (Non Password Protected Service Settings Group)

Important! *FACTORY DEFAULT SETTINGS: Menu items that are programmable using the keypad may have a selectable choice that is listed as Factory Default. This Factory Default setting is the software default that is initially factory-programmed for a new module assembly and may NOT be the correct setting for a specific operating chiller. Always review all settings when any module is replaced to verify that the settings agree with the desired settings that were selected at initial startup or programmed at the factory.*

The Service settings menu has three distinct grouping of items within it. The first group is the non-password protected group that consists of all of the settings, feature enables, setpoints etc., that are benign; while they are unlikely to be changed often by a user or operator, changes in them do not seriously effect the standard protection or reliability of the chiller.

The other two groupings are protected, each with a separate password. These two groups are for changing parameters and settings regarding field commissioning and fundamental protection and control of the chiller subsystems (Field Startup) or for programming of the UCM as to how the specific chiller was built in the Factory (Machine Configuration). Once properly set, the items in these protected menus should never be changed again without specific knowledge of the effects of the changes. In rare instances, certain field problems may be corrected by making changes in these protected menus but certain aspects of chiller reliability may be compromised. The main reason these are accessible at all, is for field commissioning and to allow for the field programming of service replacement UCMs.

Two additional password protected menus are available in the Service Settings group if the IPC Refrigerant Monitor is installed. The Refrigerant Monitor Settings Group and the Refrigerant Monitor Calibration Group are used to configure the IPC Refrigerant Monitor.

Service Setting Group Heading

Service Settings: Basic Setups
Press (Next)(Previous) To Continue

Menu Settings Password

If the Menu Settings Password is Enabled in the Service Setup Group, following each setting group heading the following will be displayed:

Settings In This Menu Are [status]
[password message]

Likewise, if the Menu Settings Password is Disabled in the Service Setup Group, the above screen will not appear.

The possible values for status are "Locked" or "Unlocked". If the password status is locked, the password message will be "Enter Password to Unlock". The user will then depress (-)(+)(-)(+)(-)(+) followed by the <Enter> key. The password keystrokes will be echoed to the screen as a visual aide. The last six keystrokes represent the current password, and up to twenty keystrokes can be entered. An incorrect password, or the twenty-first keystroke will result in the password message "Invalid Password".

If the password status is unlocked, the password message will be "Press (Enter) to Lock". Pressing <Enter> will lock all of the setpoint menus. Likewise, if the password status is locked and the correct password is entered, all of the setpoint menus will be unlocked.

Whenever a password is in use the "Press (+)(-) to change setting" message will be suppressed on all setpoint screens. Any attempt to change a setpoint will result in the message "Setting is Locked" being displayed for 1 second. The password once entered will remain valid until canceled.

Figure 3

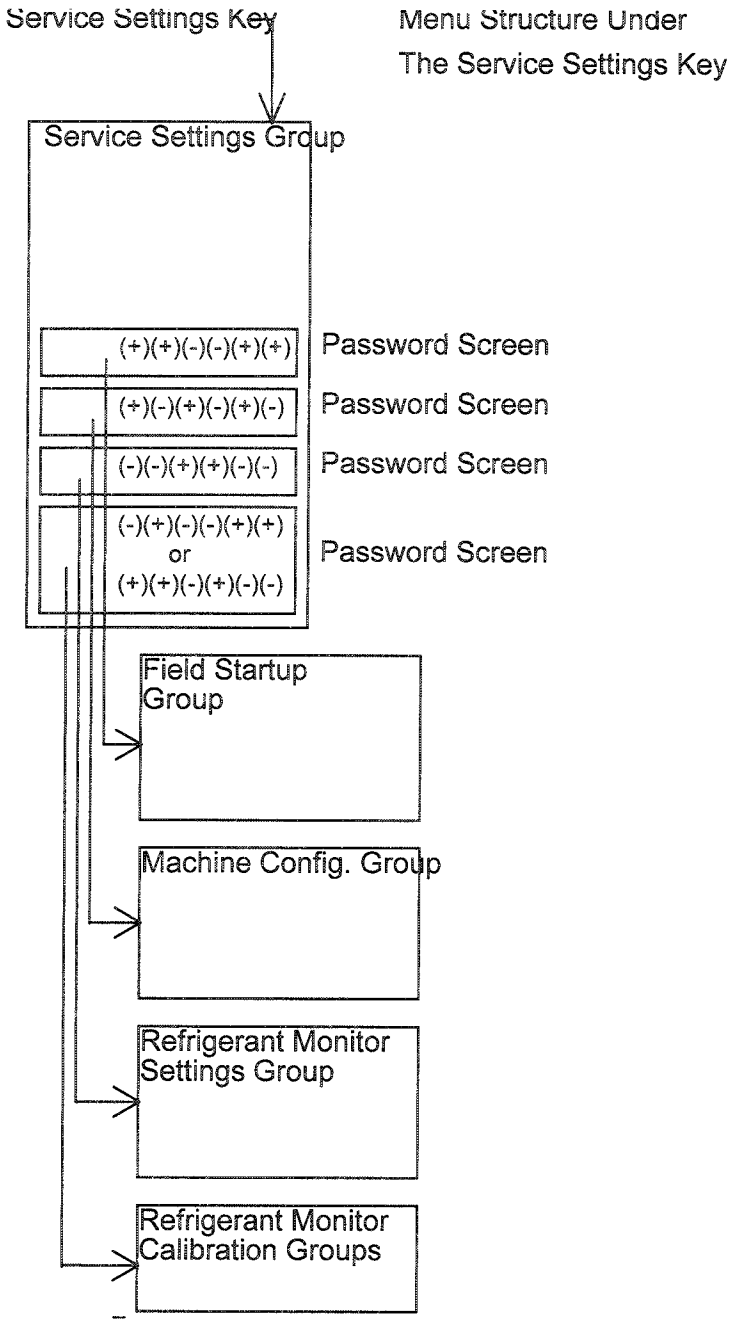

Keypad/Display Lockout

This display only appears if the keypad lockout feature is enabled.

Press (Enter) to Lock Display & Keypad
Password will be required to Unlock

If the <Enter> key is pressed to lock the keypad, the following message is displayed, and all further input from the keypad is ignored, including the <Stop> key, until the password is entered. The password consists

of pressing the <Previous> and <Enter> keys at the same time.

******DISPLAY AND KEYPAD ARE LOCKED******
********ENTER PASSWORD TO UNLOCK********

If the keypad is locked and the password is entered, the display will go to the Chiller Operating Mode display of the Chiller Report.

Language Setting

Language: xxxxxxxx
Press (+) (-) to Change Setting

Possible Language Selections for the CLD are: English (Factory Default), Francais, Deutsche, Espanol, Nippon (also known as Katakana (uses Japanese Characters), Italian, Nederland, and CODED. Possible Language Selections for the CCCLD are: English (Factory Default), Traditional Chinese, Simplified Chinese, Korean, Thai, and Japanese.

Display Units

Display Units: [Type]
Press (+) (-) to Change Setting

Possible values of [Type] are: English (Factory Default) and SI.

Decimal Places Displayed Setpoint

Decimal Places Displayed: [Status]
Press (+) (-) to Change Setting

The choices for Status are: XXX.X (Factory Default) and XXX.

Display Menu Headings Enable

Display Menu Headings: [d/e]
Press (+) (-) to Change Setting

The Factory Default value is Enabled. If disabled the Menu Headings in each Menu or Group do not appear.

Clear Custom Menu

Press (Enter) To
Clear The Custom Menu

When <Enter> is pushed a 2 second message appears as shown below and then returns to above screen.

Custom Menu Has Been Cleared

Differential to Start Setpoint

Differential to Start Setpoint: xxx.x f/c
Press (+) (-) to Change Setting

Range of values is 1 to 10°F (0.5 to 5.5°C) in increments of 1 or 0.1°F or C depending on the Service Setup Screen xxx or xxx.x. Factory Default is 5°F (2.8°C).

Differential to Stop Setpoint

Differential to Stop Setpoint: xxx.x f/c
Press (+) (-) to Change Setting

Range of values is 1 to 10°F (0.5 to 5.5°C) in increments of 1 or 0.1°F or °C depending on the Service Setup Screen xxx or xxx.x. Factory Default is 5°F (2.8°C).

Evap/Cond Pump Off Delay Time

Evap Pump Off Delay: xxx Min
Press (+)(-) to Change Setting

Range of values is 0 to 30 minutes in increments of 1 Minute. Factory Default is 1 Minute.

If the current running mode is hot water control state the following display is substituted for the above display:

Cond Pump Off Delay: xxx Min
Press (+)(-) to Change Setting

Printer Setups

This screen is shown only when the Printer Option is Installed.

Printer Setups
(Enter) to Change : (Next) to Continue

If <Next> is pressed the following printer setup screens are skipped. If <Enter> is pressed the following screens are displayed to permit modification of the printer setups.

Print on Time Interval: [Status]
Press (+)(-) to Change Setting

The choices for Status are: Enable (Factory Default) and Disable.

Print Time Interval: xxx Hours
Press (+)(-) to Change Setting

Range of values is 1 to 24 Hours in increments of 1 Hour. Factory Default is 8 Hours.

Print on Diagnostic: [Status]
Press (+)(-) to Change Setting

The choices for Status are: Enable (Factory Default) and Disable.

Help Note:
This will print every time a diagnostic happens.

Number of Pre-Diag Reports: xx
Press (+)(-) to Change Setting

Range of values is 1 to 5 in increments of 1. Factory Default is 5.

Diagnostic Report Interval: xx sec
Press (+)(-) to Change Setting

Range of values is 2 to 120 seconds in increments of 1 second. Factory Default is 5 seconds.

Printer, Baud Rate: [Status]
Press (+)(-) to Change Setting

The choices for Status are: 300, 1200, 2400, 4800, 9600 (Factory Default), and 19,200.

Printer, Parity: [Status]
Press (+)(-) to Change Setting

The choices for Status are: None (Factory Default), Odd, and Even.

Printer, Data Bits: [Status]
Press (+)(-) to Change Setting

The choices for Status are: 8 (Factory Default) and 7.

Printer, Stop Bits: [Status]
Press (+)(-) to Change Setting

The choices for Status are: 1 (Factory Default) and 2.

Printer Handshaking: [Status]
Press (+)(-) to Change Setting

The choices for Status are: XON/XOFF (Factory Default), DTR, RTS, and None.

Clear Restart Inhibit Timer

Press (Enter) to
Clear the Restart Inhibit Timer

When <Enter> is pushed, a 2 second message appears as shown below and then returns to above screen.

Restart Inhibit Timer Has Been Cleared

Field Start-up

Important! *FACTORY DEFAULT SETTINGS: Menu items that are programmable using the keypad may have a selectable choice that is listed as Factory Default. This Factory Default setting is the software default that is initially factory-programmed for a new module assembly and may NOT be the correct setting for a specific operating chiller. Always review all settings when any module is replaced to verify that the settings agree with the desired settings that were selected at initial startup or programmed at the factory.*

Field Startup

The Field Startup Group password is + + - - + + <Enter>. The Field Startup Group contains items that are primarily associated with Field Commissioning of the chiller as well as the fundamental control and protection of the chiller subsystems. If the field startup password is entered, the display goes to the menu defined below. If a key is not pressed every 10 minutes in this password protected menu, the display returns to the Chiller Operating Mode display of the Chiller Report, and the password must be entered again to return to this menu.

Field Start-up Group Heading

Field Start-up Group Settings
Press (Next)(Previous) To Continue

This header appears when the headers do not appear in the Service Settings menu.

Keypad/Display Lock Feature Enable

This feature permits the entire Keypad and Display to be locked out. A message appears on the screen to describe this condition. No access is permitted to either the Report screens or the Setting Screens when this feature is both Enabled here and Locked at the Service Settings Menu. It is important to note that in this condition, both the <Stop> and <Auto> keys do not function.

Keypad/Display Lock Feature: [d/e]
Press (+)(-) to Change Setting

Possible values of [d/e] are: Disable (Factory Default) and Enable.

When the keypad lock feature is Disabled, the keypad lock display does not appear in the non-password protected area of the Service Settings menu and the Keypad/Display cannot be locked. When the keypad/display lock feature is Enabled, the keypad lock display does appear in the Service Settings menu so the keypad can be locked.

Menu Settings Password Enable

The Menu Settings Password permits the Settings in each of the menus to be password protected. All Report Menus and Setting Menus can still be viewed at any time if this feature is either Enabled or Disabled; the <Stop> and <Auto> keys also remain active. If this feature is Enabled, then all Menu Settings are password protected.

Menu Settings Password Feature: [d/e]
Press (+)(-) to Change Setting

Possible values of [d/e] are: Disable (Factory Default) and Enable.

When the feature is Disabled, the Menu Setting Password display does not appear at the top of each of the Settings Menus and the Menu Settings cannot be password protected. When the Menu Setting Password feature is Enabled, the Menu Settings Password display appears just below each of the Settings Menu Headers so the settings can be changed if the proper password is entered.

ICS Address

ICS Address: xx
Press (+)(-) to Change Setting

Range of values is 1 to 127 in increments of 1. Factory Default is 65.

Power Up Start Delay Time

Help Note:
Used primarily for scheduling multiple units or to minimize current inrush.

Power Up Start Delay Time: xxx sec
Press (+)(-) to Change Setting

Range of values is 0 to 600 seconds in increments of 1. Factory Default is 0 sec.

Design Delta Temperature Setpoint

Design Delta Temp Setpoint: xxx.x f/c
Press (+)(-) to Change Setting

Range of values is 4 to 30°F (2.2 to 16.7°C) in increments of 1 or 0.1°F or °C depending on the Service Setup Screen xxx or xxx.x. Factory Default is 10°F (5.5°C).

Leaving Water Temperature Cutout Setpoint

Lvg Wtr Temp Cutout Setpoint:xxx.x f/c
Press (+)(-) to Change Setting

Range of values is -10 to 36°F (-23.3 to 2.2°C) in increments of 1 or 0.1 °F or °C depending on the Service Setup Screen xxx or xxx.x. The Factory Default is 36.0°F (2.2°C).

When this setpoint is within 1.7°F of the Front Panel Chilled Water Setpoint, the Front Panel Chilled Water Setpoint is increased along with this setpoint to maintain the differential. A message will be displayed for 2 seconds to indicate that the FPCW setpoint has been increased.

When this setpoint is adjusted below 35.3°F the following is displayed on the second line:

"Warning: Adequate Antifreeze Required".

Low Refrigerant Temperature Cutout Setpoint

Low Rfgt Temp Cutout Setpt: xxx.x f/c
Press (+)(-) to Change Setting

Range of values is -35 to 36°F (-37.2 to 2.2°C) in increments of 1 or 0.1°F or °C depending on the Service Setup Screen xxx or xxx.x. The Factory Default is 32.0°F (0.0°C).

Low Evaporator Water Flow Warning Setpoint

The following will be displayed only if the Differential Water Sensing Option is installed.

Low Evap Flow Warning: xx.x gpm/ton
Press (+)(-) to Change Setting

Range of values is 0.0 to 4.0 gpm/ton (0.0 to 15.1 lpm/ton) in increments of 0.1. Factory Default is 1.2 gpm/ton (4.5 lpm/ton).

Condenser Limit Setpoint

Help Note:
This limits load by vane closure.

Condenser Limit Setpoint: xx % HPC
Press (+)(-) to Change Setting

Range of values is 80 to 120% in increments of 1%. Factory Default is 93%.

Maximum Restart Inhibit (RI) Timer Setting

Maximum RI Timer: xxx Minutes
Press (+)(-) to Change Setting

The Range of values is 30 to 60 Minutes in increments of 1 Minute. Factory Default is 60 Minutes.

Purge Control/Type

Purge Control/Type: [Type]
Press (+) (-) to Change Setting

Possible values of [Type] are: Micro Purge (Factory Default) and Stand-Alone Purge.

Purge Service Log Reset

The following screen(s) shall be suppressed if the selected Purge Control/Type is "Stand-Alone Purge".

Service Log: Press (Enter) to Reset
Purge Pumpout Time: xxxxxxxx.x Pumpout Min

Service Log: Press (Enter) to Reset
Time Since Last Reset: xxxxx Cal Days

Note: Resetting in either screen above will reset both fields of data to Zero.

Purge Maximum Pumpout Rate

The following screen(s) does not appear if the selected Purge Control/Type is "Stand-Alone Purge."

Purge Max Pumpout Rate: xx Min/24 Hrs
Press (+) (-) to Change Setting

Range of values is 1 to 100 Minutes/24 Hrs in increments of 1 Minute/24 Hrs. Factory Default is 20 Minutes/24 Hrs.

Purge Service Excessive Pumpout Override Timer

The following screen(s) does not appear if the selected Purge Control/Type is "Stand-Alone Purge."

Purge Disable Pumpout Alarm for: xx Hrs
Press (+) (-) to Change Setting

Range of values is 1 to 72 Hours in increments of 1 Hour. Factory Default is 0 Hours.

Purge Low Chiller Sat. Cond. Liquid Temp. Protection Enable

The following screen(s) does not appear if the selected Purge Control/Type is "Stand-Alone Purge."

Purge Low Liquid Temp Inhibit: [d/e]
Press (+) (-) to Change Setting

Possible values of [d/e] are: Disable (Factory Default) and Enable.

Purge Low Chiller Sat. Cond. Temp Setpoint

The following screen(s) does not appear if the selected Purge Control/Type is "Stand-Alone Purge."

Prg Low Liquid Temp Inhibit Setpt xx.x f/c
Press (+) (-) to Change Setting

Range of values is 32 to 50°F(0.0 to 10.0°C) in increments of 1 or 0.1°F or°C depending on the Service Setup Screen xxx or xxx.x. Factory Default is 40°F (4.4°C).

Surge Protection Enable

Help Note:
This detects gas surge as een through current.

Surge Protection: [d/e]
Press (+) (-) to Change Setting

Possible values of [d/e] are: Disable and Enable (Factory Default). Surge protection is based on motor current fluctuation.

Under/Over Voltage Protection Enable

This screen does not appear if the Line Voltage Sensing Option is not installed or Compressor Power Source is Engine/Generator.

Line voltage above + 10% of nominal. (Must hold = + 10 % of nominal. Must trip = + 15 % of nominal. Reset differential = min. of 2% and max. of 4%. Time to trip = minimum of 1 min. 10 sec. and maximum of 5 min. 20 seconds).

Under/Over Voltage Protection: [d/e]
Press (+) (-) to Change Setting

Possible values of [d/e] are: Disable (Factory Default) and Enable.

Help Note:
Holds at ±10% of nominal voltage. Trips at ±15% nominal voltage. Trips in 60 seconds at ±12% nominal. The trip timer resets at ±9% nominal (ie. if you are in the 12%-60 second trip window and the voltage drops to +9% from +12%, the trip timer resets.)

Note: Under/Over Voltage Protection is activated only if Under/Over Voltage Protection is enabled and Line Voltage Sensing Option is Installed.

Phase Reversal Protection Enable

This screen does not appear if the starter type is "Adaptive Frequency" or "AFDB."

Phase Reversal Protection: [d/e]
Press (+) (-) to Change Setting

Possible values of [d/e] are: Disable and Enable (Factory Default).

A phase reversal is detected on the incoming current. On a compressor startup, the phase reversal logic must detect and trip in 0.7 seconds.

Help Note:
Rotation must be clockwise (ABC) from the thrustbearing end.

Phase Unbalance Limit Enable

Phase Unbalance Limit: [d/e]
Press (+) (-) to Change Setting

Possible values of [d/e] are: Disable and Enable (Factory Default).

The RLA of the motor is derated by resetting the active current limit. The trip point is a 30% phase unbalance for 90 seconds.

Momentary Power Loss (MPL) Protection Enable

This screen does not appear if the starter type is "Adaptive Frequency" or "AFDB." or Compressor Power Source is Engine/Generator.

Momentary Power Loss Protection: [d/e]
Press (+) (-) to Change Setting

Possible values of [d/e] are: Disable and Enable (Factory Default).

For MPL, on every power down, the reset inhibit timer is reset to 30 seconds if the motor temperature is <165°F and 15 minutes if the motor temperature is > or = to 165°F.

Enhanced Oil Temp. Protection

This screen does not appear if the starter type is "Adaptive Frequency" or "AFDB.

When enhanced oil protection is enabled, the oil heater relay is energized at 140.5°F (60.3°C) and de-energized at 145.5°F (63.1°C). The low oil temperature cutout "setpoint" is equal to the saturated evaporator refrigerant temperature plus 30°F (16.6°C) or 100 °F (37.8°C) which ever is larger."

Enhanced Oil Temp Protection: [option]
Press (+) (-) to Change Setting

Possible options are: Disable and Enable (Factory Default).

Help Note:

*Enhanced oil protection **must** be enabled for all refrigerant pump units to sense the "Low Oil Temperature Running" diagnostics.*

Oil Temp Setpoint

This screen does not appear when Enhanced Oil Temperature Protection is enabled.

Oil Temp SetPoint: xxx.x f/c
Press (+)(-) to Change Setting

The range of values is 100°F to 160°F (37.8 to 71.1°C) in increments of 1 or 0.1°F or °C, depending on the Service Setup Screen xxx or xxx.x. Factory Default is 143°F (61.9°C).

Low Oil Temp Cutout

This screen does not appear when Enhanced Oil Temperature Protection is enabled.

Low Oil Temp Cutout: xxx.x f/c
Press (+)(-) to Change Setting

Range of values is 80 to 140°F (26.7 to 60.0°C) in increments of 1 or 0.1°F or °C depending on the Service Setup Screen xxx or xxx.x. Factory Default is 95°F (35.0°C).

Low Oil Temp Start Inhibit Differential

This screen only appears when Enhanced Oil Temperature Protection is enabled.

Low Oil Temp Start Inhibit Diff: xxx.x f/c
Press (+)(-) to Change Setting

Range of values is 20 to 30°F (11.1 to 16.7°C) in increments of 1 or 0.1°F or °C depending on the Service Setup Screen xxx or xxx.x. Factory Default is 27.5°F (15.3°C).

High Discharge Temp Cutout

This screen is displayed only if the Discharge Sensor Option is installed.

High Discharge Temp Cutout: xxx.x f/c
Press (+)(-) to Change Setting

Range of values is 170 to 220°F (76.6 to 104.4°C) in increments of 1 or 0.1°F or °C depending on the Service Setup Screen xxx or xxx.x. Factory Default is 200°F (93.3°C).

External Base Loading Enable

External Base Loading: [d/e]
Press (+)(-) to Change Setting

Possible values of [d/e] are: Disable (Factory Default) and Enable.

Soft Load Control Enable

Soft Load Control: [d/e]
Press (+)(-) to Change Setting

Possible values of [d/e] are: Disable (Factory Default) and Enable.

Soft Load Starting Current Limit

Soft Load Starting Current Limit: xx %
Press (+)(-) to Change Setting

Range of values is 40 to 100% in increments of 1%. Factory Default is 100%.

Help Note:
The unit will start using the set number, i.e. 60% and SLOWLY ramp up to 100%.

Soft Load Current Limit Rate Of Change

Soft Load Current Limit Rate:x.x %/min
Press (+)(-) to Change Setting

Range of values is 0.5 to 5%/Min in increments of 1 or 0.1%/Min depending on the Service Setup Screen xxx or xxx.x. Factory Default is 5%/Min.

Help Note:
This controls the soft load rate of change.

Soft Load Lvng Wtr Temp Rate of Change

Soft Load Lvg Water Rate: x.x f/c/min
Press (+)(-) to Change Setting

Range of values is 0.5 to 5°F/Min (0.3 to 2.8°C/Min) in increments of 1 or 0.1°F/Min depending on the Service Setup Screen xxx or xxx.x. Factory Default is 5°F/Min (2.8°C/Min).

Hot Gas Bypass Enable

This screen does not appear when the hot gas bypass option is not installed.

Hot Gas Bypass Control: [d/e]
Press (+)(-) to Change Setting

Possible values of [d/e] are: Disable (Factory Default) and Enable.

HGBP Timer Enable

The following will be displayed only if HGBP is installed.

HGBP Timer: [Status]
Press (+)(-) to Change Setting

The choices for Status are: Enable (Factory Default) and Disable (Unimtd Time).

Maximum HGBP Time

The following will be displayed only if HGBP is Installed and the HGBP Timer is Enabled.

Maximum HGBP Time: xxx Min
Press (+)(-) to Change Setting

Range of values is 1 to 480 minutes in increments of 1 Minute. Factory Default is 30 Minutes.

Help Note:
Turns off the unit at the maximum time, i.e. 30 minutes

HGBP Mode, Vane Target

This screen does not appear when the hot gas bypass option is not installed.

Hot Gas Bypass Mode IGV Target:xx %
Press (+)(-) to Change Setting

Range of values is 0 to 30% in increments of 1%. Factory Default is 10%. This setting drives the IGVs to the target when HGBP is entered.

LWT Control Proportional Gain (Kp) Setpt

LWT Proportional Gain: xxx.x %/F
Factory Dflt is 10.0 %/F & 18.0 %/C

The range of valves is 0 to 100%/°F (0 to 180%/°C) in increments of 0.1.

Help Note:
Looks at how far from setpoint and how fast we move the vanes. Higher number is faster.

LWT Control Integral Gain (Ki) Setpt

LWT Integral Gain:x.xxx %/F
Factory Dflt is 0.110 %/F & 0.198 %/C

The range of valves is 0 to 1%/°F (0 to 1.8%/°C) in increments of 0.001. The Factory Default is 0.110%/°F (0.198%/°C).

Help Note:
Looks at error from setpoint, how long we have been away (Time) from setpoint. A higher number means the faster we converge on the setpoint, but may make the control oscillatory.

LWT Control Derivative Gain (Kd) Setpt

LWT Derivative Gain: xx.x %/F
Factory Dflt is 00.0 %/F & 00.0 %/C

The range of valves is 0 to 10.0%/F (0 to 18.0%/C) in increments of 0.1. The Factory Default is 00.0%/F (00.0%/C).

Help Note:
Rate of change. Higher number settles out an oscillating system.

IGV Maximum Travel Setpt

This screen is displayed only if "Inlet Guide Vane Output" is "Stepper Motor."

IGV Maximum Travel: xx,xxx Steps
Press (+) (-) to Change Setting

Range of values is 0 to 60,000 Steps in increments of 100 Steps. Factory Default is 50,000 Steps.

Note: this is also known as the 90 degree vane setting. You must use the value determined at the factory. Each unit is unique and must be individually set. If the factory setting cannot be determined, it must be field-supplied by following the procedure in Trane CVHF-CSB-2B.

Guide Vane Closed Travel Stop

This screen is displayed only if "Inlet Guide Vane Output" is "Stepper Motor."

Guide Vane Closed Travel Stop: xx.x %
Press (+) (-) to Change Setting

Range of values is 0 to 100% in increments of 1%. Factory Default is 0%.

AF Adjustable Speed Control Algorithm Enable

The following is displayed only if the Starter Type is "Adaptive Frequency" or "AFDB" or the Compressor Power Source is Engine/Generator.

AF Adaptive Speed Control Alg: d/e
Press (+) (-) to Change Setting

Possible values of [d/e] are: Disable and Enable (Factory Default).

AF Leaving Water Standard Deviation

The following is displayed only if the Starter Type is "Adaptive Frequency" or "AFDB" or the Compressor Power Source is Engine/Generator.

AF Leaving Water Standard Deviation: x.x
Press (+) (-) to Change Setting

Range of values is 0.5 to 4.0 in increments of 0.1. Factory Default is 1.0.

AF Pressure Coefficient Constant

The following is displayed only if the Starter Type is "Adaptive Frequency" or "AFDB" or the Compressor Power Source is Engine/Generator.

AF Pressure Coefficient Constant: xxxx
Press (+) (-) to Change Setting

Range of values is 0 to 2000 in increments of 1. Factory Default is 800.

Note: The above value entered is 1.316 X 10^9 / (# Stages X (Impeller Dia ^2)) all divided by 1000 for the purpose of display and IPC data transmission (e.g. the actual range is 0-2,000,000 in increments of 1000). In the chiller module it is multiplied by 1000 again so it is properly scaled.

AF Re-Optimization Factor

The following is displayed only if the Starter Type is "Adaptive Frequency" or "AFDB" or the Compressor Power Source is Engine/Generator.

AF Re-Optimization Factor: x.xx
Press (+)(-) to Change Setting

Range of values is 0.03 to 1.00 in increments of 0.01. Factory Default is 0.30.

AF Re-Optimization Timer

The following is displayed only if the Starter Type is "Adaptive Frequency" or "AFDB" or the Compressor Power Source is Engine/Generator.

AF Re-Optimization Timer: xxx Hrs
Press (+)(-) to Change Setting

Range of values is 1 to 255 in increments of 1. Factory Default is 24.

AF Boundary Pressure Coefficient Y Intercept

The following is displayed only if the Starter Type is "Adaptive Frequency" or "AFDB" or the Compressor Power Source is Engine/Generator.

AF Boundary PC Y-Intercept: x.xx
Press (+)(-) to Change Setting

Range of values is 0.01 to 2.00 in increments of 0.01. Factory Default is 0.40. This setpoint is settable from this screen but also changes as the Adjustable Frequency Control Algorithm runs. It is similar to a clock setting where you set it and then it runs from there.

AF Boundary Pressure Coefficient Y Intercept Max

The following is displayed only if the Starter Type is "Adaptive Frequency" or "AFDB" or the Compressor Power Source is Engine/Generator.

AF Boundary PC Y-Intercept Maximum: x.xx
Press (+)(-) to Change Setting

Range of values is 0.01 to 2.00 in increments of 0.01. Factory Default is 2.00.

AF Pressure Error Deadband

The following is displayed only if the Starter Type is "Adaptive Frequency" or "AFDB" or the Compressor Power Source is Engine/Generator.

AF Pressure Error Deadband: x.xxx
Press (+)(-) to Change Setting

Range of values is 0.001 to 1.000 in increments of 0.001. Factory Default is 0.030.

AF Proportional Speed Gain

The following is displayed only if the Starter Type is "Adaptive Frequency" or "AFDB" or the Compressor Power Source is Engine/Generator.

AF Proportional Speed Gain: xxx
Press (+) (-) to Change Setting

Range of values is 1 to 100 in increments of 1. Factory Default is 50.

Minimum Capacity Timer Enable

Min Capacity Timer: [Status]
Press (+) (-) to Change Setting

The choices for Status are: Enable (Factory Default) and Disable (Unlmtd Time).

Note: On Non-Adaptive Frequency chillers this Timer times out when the chiller is at minimum IGV position and the Leaving Water Temp is below the CWS. On Adaptive Frequency chillers this Timer times out when the chiller is at minimum IGV position or minimum AF speed and LWT < CWS.

Time Permitted at Minimum Capacity

The following will be displayed only if the Minimum Capacity Timer setpoint is Enabled.

Time Permitted at Min Cap: xxx Min
Press (+) (-) to Change Setting

Range of values is 1 to 480 minutes in increments of 1 Minute. Factory Default is 30 Minutes.

Evaporator Flow Coefficient

The following is displayed only if the Differential Water Press Sensor Option is Installed.

Evap Flow Coefficient: xxxx
Press (+) (-) to Change Setting

Range of values is 0 to 3000 in increments of 5. Factory Default is 1000.

Help Note:
Flow coefficients and flow exponents screens are factory-set and used only for differential water pressure sensing option.

Evaporator Flow Equation Exponent

The following is displayed only if the Differential Water Press Sensor Option is Installed.

Evap Flow Equation Exponent: xxxx
Press (+) (-) to Change Setting

Range of values is 0 to 1000 in increments of 1. Factory Default is 600.

Note: The desired range for the above is 0.5000 to 0.6000. To put in this kind of range into the CLD, the fact that it does not start at zero represents a special case. To minimize special cases it is preferred that a multiplier of 10,000 and a offset of 5000 be used in the computer that generates the number.

Evaporator Fluid Coefficient

The following is displayed only if the Differential Water Press Sensor Option is Installed.

Evap Fluid Coefficient: xxxx
Press (+) (-) to Change Setting

Range of values is 0 to 1000 in increments of 1. Factory Default is 400.

Note: The desired range for the above is 0.0000 to 0.1000. To put in this kind of range into the CLD, the fact that it does not start at zero represents a special case. To minimize special cases it is preferred that a multiplier of 10,000 be used in the computer that generates the number.

Condenser Flow Coefficient

The following is displayed only if the Differential Water Press Sensor Option is Installed.

Cond Flow Coefficient: xxxx
Press (+) (-) to Change Setting

Range of values is 0 to 2000 in increments of 5. Factory Default is 500.

Condenser Flow Equation Exponent

The following is displayed only if the Differential Water Press Sensor Option is Installed.

Cond Flow Equation Exponent: xxxx
Press (+)(-) to Change Setting

Range of values is 0 to 1000 in increments of 1. Factory Default is 600.

Help Notes:
Flow coefficients and flow exponents screens are factory-set and used only for differential water pressure sensing option.The desired range for the above is 0.5000 to 0.6000. To put in this kind of range into the CLD, the fact that it does not start at zero represents a special case. To minimize special cases it is preferred that a multiplier of 10,000 and a offset of 5000 be used in the computer that generates the number.

Local Atmospheric Pressure

Local Atmospheric Pressure: xx.x psia/kpa
Press (+)(-) to Change Setting

The range of settings is 10 to 16 psig in increments of 1 or 0.1 psig or kPa depending on the Service Setup Screen xxx or xxx.x. The Factory Default is 14.7 psig.

Help Note:
This is important for correct temperature to pressure conversion

Refrigerant Pressure Analog Output Option

Rfgt Pressure Output Option: [status]
Press (+)(-) to Change Setting

Possible values for status are: % Cond (Factory Default) and Delta.

Min Delta Pressure Calibration

The following is displayed only if the "Refrigerant Pressure Analog Output Option" is set to "Delta".

Min Delta Press Calib (2 VDC):XXXXPSID/kPa
Press (+)(-) to Change Setting

The range of values is 0-400 psid (0-2758 kPa) in increments of 1 psid/kPa. Factory Default is 0 psid (0 kPa).

Note: 6.8948 kPa = 1 psi.

Max Delta Pressure Calibration

The following is displayed only if the "Refrigerant Pressure Analog Output Option" is set to "Delta".

Max Delta PressCalib (10 VDC):XXXXPSID/kPa
Press (+)(-) to Change Setting

The range of values is 1-400 psid (7-2758 kPa) in increments of 1 psid/kPa. Factory Default is 30 psid (207 kPa).

Note: 6.8948 kPa = 1 psi.

IGV Stroke Time

The following is displayed only if the "Inlet Guide Vane Output" is set to "Pulsed".

Inlet Guide Vane Stroke Time: XXX Sec
Press (+)(-) to Change Setting

The range of values is 15 to 100 seconds in increments of 1 second. Default is 45 seconds.

Low Differential Oil Pressure Cutout

This screen is displayed only if the "Oil Pressure Protection" is "Transducer".

Low Diff Oil Press Cutout: XX psid/kpa
Press (+)(-) to Change Setting

The range of values is 9 to 35 psid in increments of 1 psid. Default is 12 psid.

Check Oil Filter Diagnostic

This screen is available only if differential oil pressure transducer(s) are installed.

Check Oil Filter Diagnostic: [setting]
Press (+) (-) to Change Setting

Possible values of [setting] are: Disable (Factory Default) and Enable.

Check Oil Filter Setpoint

This screen is displayed only if differential oil pressure transducer(s) are installed and check oil filter diagnostic is enabled.

Check Oil Filter Setpt: [setting]
Press (+) (-) to Change Setting

Possible values of [setting] are: 9 to 60 psid in 1 psid increments. Factory Default is 15 psid.

Evap Leaving Water Temp Offset

Evap Leaving Water Temp Offset: [setting]
Press (+) (-) to Change Setting

Possible values of [setting] are: -2.0°F to 2.0°F in 0.1°F increments (-/+ 1.1°C in 0.1°C increments). Factory Default is 0.0°F.

Saturated Evap Rfgt Temp Offset

Saturated Evap Rfgt Temp Offset: [setting]
Press (+) (-) to Change Setting

Possible values of [setting] are: -2.0°F to 2.0°F in 0.1°F increments (-/+ 1.1°C in 0.1°C increments). Factory Default is 0.0°F.

Water Pressure Calibration

The following menus is displayed only if the "Diff Wtr Press Sensor" setpoint is set to "Installed, <= 150 psig."

Water Pressure Calibration: [setting]
Press (+) (-) to Change Setting

Possible values of [setting] are: Auto (Factory Default) and Manual

If the above menu is set to "Manual," the following two menus are displayed.

Measured Evap Diff Wtr Press: X.X PSID/kPa
Press (+) (-) to Change Setting

Possible values is 0 to 25 psid (0 to 172.4 kPa) in 0.1 psid (kPa) increments. Factory Default is 0.0 psid (kPa).

Measured Cond Diff Wtr Press: X.X PSID/kPa
Press (+) (-) to Change Setting

Possible values is 0 to 25 psid (0 to 172.4 kPa) in 0.1 psid (kPa) increments. Factory Default is 0.0 psid (kPa).

The value displayed in the preceding two menus shall normally be 0.0 psid (kPa). When a manual calibration of the evaporator or condenser water pressure is desired, the measured differential pressure shall be entered in the appropriate menu. This non-zero value shall return to 0.0 psid (kPa) when the water pressure calibration is completed.

Machine Configuration

Important! *FACTORY DEFAULT SETTINGS: Menu items that are programmable using the keypad may have a selectable choice that is listed as Factory Default. This Factory Default setting is the software default that is initially factory-programmed for a new module assembly and may NOT be the correct setting for a specific operating chiller. Always review all settings when any module is replaced to verify that the settings agree with the desired settings that were selected at initial startup or programmed at the factory.*

Service Settings - Machine Configuration

The Machine Configuration password is + - + - + - <Enter>. If the machine configuration password is entered, the display goes to the menu defined below. If a key is not pressed every 10 minutes in this password protected menu, the display returns to the Chiller Operating Mode display of the Chiller Report, and the password must be entered again to return to this menu.

Machine Configuration Group Heading

Machine Configuration Group Settings
Press (Next)(Previous) To Continue

This header appears when the headers do not appear in the Service Settings menu.

Unit Frequency

Unit Frequency: [Freq]
Press (+)(-) to Change Setting

Possible values of Frequency are: 60 Hz (Factory Default) and 50 Hz.

Unit Type

Unit Type: [type]
Press (+)(-) to Change Setting

Unit type will default to one of three chiller types. The default unit type will limit the selections to chillers of that type.

When the Factory Default is CVHE, possible values of unit type are: CVHE, CVGF, FastPak water-cooled, FastPak air cooled, CVHG, CVHF, CVHB, CVGE, and CVGG.

Nominal Unit Tons

Help Note:
Used for ton display resolution

Nominal Unit Tons: [tons]
Press (+)(-) to Change Setting

Possible values of [tons] are "100" through "1800" in 10 ton increments. Factory Default is 500 tons.

Refrigerant Type

Refrigerant Type: [type]
Press (+)(-) to Change Setting

Possible values for type are: R11, R123 (Factory Default), R12, R134a, Water, R22, and R113.

Help Note:
This is important for correct temperature to pressure conversion

Refrigerant Monitor Type

Refrigerant Monitor Type: [type]
Press (+)(-) to Change Setting

Possible values for type are: None (Factory Default), Analog interface, and IPC Interface.

Starter Type

Starter Type: [type]
Press (+)(-) to Change Setting

Possible values for type are: Undefined, Adaptive Frequency (AFDA), Y Delta (Factory Default), X Line, Solid State (C515 Series), Auto Transformer, and Primary Reactor, AFDB, Solid State (SMCPP) (Standalone for FastPak only).

Startup Contactor Test - Y-D Starters Only

This screen shall be displayed only when the starter type is Y-Delta.

Level 2 ContactorIntegrityTest: [d/e]
Press (+)(-) to Change Setting

Possible values of [d/e] are: Disable (Factory Default) and Enable. This test checks for welded contactors before every start.

Rated Load Amps

Rated Load Amps: xxxx Amps
Press (+)(-) to Change Setting

The range of values is 0-2500 in 1 amp increments. Factory Default is 500 Amps.

Motor Heating Constant

Motor Heating Constant Setpt: xxx Min
Press (+)(-) to Change Setting

The range of values XXX is 0 to 100 Minutes in 1 Minute increments. Factory Default is 25 Minutes.

Select the Motor Heating Constant using the following table:

NTON		Motor Heating Constant
60 Hz	50 Hz	
230-320	190-270	30 Min
360-500	300-420	35 Min
560-800	470-660	40 Min
890-1280	740-1040	45 Min

Current Overload Setting #1

Current Overload Setting #1: xxxxxxxx
Press (+) (-) to Change Setting

The range of values is Decimal 00 through 31. Factory Default is 00. Factory set per nameplate.

Current Overload Setting #2

Current Overload Setting #2: xxxxxxxx
Press (+) (-) to Change Setting

The range of values is Decimal 224 through 255. Factory Default is 255. For security purposes the second setting is the 8-bit one's complement of the first setting above. The current overload settings establish the running current protection.

Procedure For Selecting Current Overload Settings for UCP2

1 Determine the Rated Load Amps (RLA) from the Unit Nameplate.

2 Refer to *Table 2* or *Table 3* as follows:

Select *Table 2* if any of the following conditions are met:

- ❑ the unit has a unit mounted starter with an RLA less than 936 Amps.
- ❑ The unit has a 24" wide control panel; no unit mounted starter, and RLA less the 936 Amps.
- ❑ The starter has a single CT/phase wired directly to the starter module.

Select *Table 3* if any of the following conditions are met:

- ❑ The unit has an RLA over 935 Amps.
- ❑ The unit has a 38" wide "Starter By Others" control panel.
- ❑ The starter has two CTs/phase wired to the starter module (greater than 600 volts).

3 Using *Table 2* or *Table 3* (determined from Step 2), determine the CT Meter Scale Rating based on the RLA from Step 1.

4 Calculate the CT factor using one of the following two equations:

If *Table 2* was used: CT Factor = (Motor RLA/CT Meter Scale Rating) x 100

If *Table 3* was used: CT Factor = (Motor RLA/CT Meter Scale Rating) x 139

5 Refer to *Table 4* . Determine Current Overload Settings #1 and #2 based on the CT Factor calculated in Step 4.

Verify Current Overload Setting #1.

Verify Current Overload Setting #2.

Table 2
CT Factor = (Motor RLA/CT Meter Scale Rating) X 100

Motor RLA	*CT Part No.*	*Ext*	*CT Meter Scale Rating*
34-50A	*x13580253*	*09*	*50A*
51-67A		*10*	*75A*
68-100A		*01*	*100A*
101-134A		*02*	*150A*
135-184A		*03*	*200A*
185-267A		*04*	*275A*
268-334A		*05*	*400A*
335-467A		*06*	*500A*
468-667A		*07*	*700A*
668-935A		*08*	*1000A*

Table 3
CT Factor = (Motor RLA/CT Meter Scale Rating) X 139

Line CT Part No.	Ext	Line CT Ratio	CT Ter. Conn	No. of Prim. Turns	RLA Ranges	Meter Scale
X13580272	-01	50:5	X1 to X2	3	8.0 – 11.9	16.7
				2	12.0 – 17.9	25.0
	-02	75:5		2	18.0 – 23.9	37.5
	-01	50:5			24.0 – 35.9	50
	-02	75:5			36.0 – 47.9	75
X13580271	-01	100:5			48.0 – 72.0	100
X13580048		150:5			72.0 – 86.3	150
		180:5	X1 to X3		86.4 – 95.9	180
		200:5	X1 to X4		96.0 – 119.9	200
	-02	250:5	X1 to X2		120.0 – 143.9	250
		300:5	X1 to X3		144.0 – 167.9	300
		350:5	X1 to X4		168.0 – 191.9	350
	-03	400:5	X1 to X2		192.0 – 239.9	400
		500:5	X1 to X3		240.0 – 287.9	500
		600:5	X1 to X4	1	288.0 – 335.9	600
	-04	700:5	X1 to X2		336.0 – 383.9	700
		800:5	X1 to X3		384.0 – 479.9	800
		1000:5	X1 to X4		480.0 – 575.9	1000
	-05	1200:5	X1 to X2		576.0 – 719.9	1200
		1500:5	X1 to X3		720.0 – 863.9	1500
X13580047	-01	1800:5	X1 to X2		864.0 – 1007.9	1800
		2100:5	X1 to X3		1008.0 – 1199.9	2100
		2500:5	X1 to X4		1200.0 – 1800	2500
	-02	1000:5	X1 to X2		480.0 – 575.9	1000
		1200:5	X1 to X3		576.0 – 719.9	1200
		1500:5	X2 to X4		720.0 – 863.9	1500

Table 4
CT Factor, Current Overload Settings #1 and #2

CT Factor	Current Overload Setting #1	Current Overload Setting #2	CT Factor	Current Overload Setting #1	Current Overload Setting #2	CT Factor	Current Overload Setting #1	Current Overload Setting #2
66	0	255	77	12	243	88	23	232
67	0	255	78	14	241	89	23	232
68	2	253	79	15	240	90	24	231
69	3	252	80	16	239	91	25	230
70	4	251	81	16	239	92	26	229
71	6	249	82	17	238	93	26	229
72	7	248	83	18	237	94	27	228
73	8	247	84	19	236	95	28	227
74	9	246	85	20	235	96	28	227
75	10	245	86	21	234	97	29	226
76	11	244	87	22	233	98	30	225
						99	30	225

Maximum Acceleration Timer #1

Maximum Accel Timer Setpt #1: xx Sec
Press (+)(-) to Change Setting

The range of values is 6 to 64 seconds. Factory default is 27 seconds.

Starter Type	*Recommended Max. Accel. Timer #1 Setting*
Undefined	*Contact Factory*
Variable Speed	*20*
Y-Delta	*27 (Factory Default)*
X-Line	*6*
Sold State	*20*
Auto-transformer	*16*
Primary Reactor	*11*

Maximum Acceleration Timer #2

The maximum acceleration timers establish the starting overcurrent protection.

Maximum Accel Timer Setpt #2: xx Sec
Press (+)(-) to Change Setting

The range of values is 191 to 249 Sec. Factory Default is 228 Seconds. For security purposes the second setting is the 8-bit one's complement of the Timer #1 setting above. Both the Maximum Accel. Timers and the Overload Settings are not adjustable from either the Remote CLD or Tracer or any other Remote/External Device.

Hot Water Control Option

This screen does not appear if compressor power source is "Engine/Generator."

Hot Water Control Option: [status]
Press (+)(-) to Change Setting

Possible values for status are: Installed and Not Installed (Factory Default).

Heatsink Start Inhibit Temperature Setpoint (FastPak)

Heatsink Start Inhibit Temp: xxx.x f/c
Press <+> <-> To Change Setting

The range of values shall be 100.0 to 200.0 °F (37.8 to 93.3 °C) in increments of .1°F/°C. Default shall be 100 °F (93.3 °C).

External Chilled Water Setpoint Option

External Chilled Wtr Setpoint:[Status]
Press (+)(-) to Change Setting

Possible values for status are: Installed and Not Installed (Factory Default).

External Current Limit Setpoint Option

External Current Limit Setpt:[Status]
Press (+)(-) to Change Setting

Possible values for status are: Installed and Not Installed (Factory Default).

External Hot Water Setpoint Option

External Hot Water Setpoint: [Status]
Press (+)(-) to Change Setting

Possible values for status are: Installed and Not Installed (Factory Default).

Acceleration Time Out Action

Acceleration Time Out Action: [action]
Press (+)(-) to Change Setting

Possible values for "action" include: Shutdown (Factory Default) and Transition. Transition results in an IFW diagnostic.

Motor Over Temperature Protection

Motor Temp Protection: [input]
Press <+> < - > to Change Setting

Possible value of [input] are: 3 Winding Sensors, MTC Switch. Factory default is 3 Winding Sensors

Motor Winding RTD Type

Motor Winding RTD Type: [type]
Press (+)(-) to Change Setting

Possible values for type are: 75 Ohm at 75°F (Factory Default) and 100 Ohm at 0°C

High Pressure Cutout Setting

High Pressure Cutout Setting:xxxx Psig/kPa
Press (+)(-) to Change Setting

The range of values is -5-500 psig (350-3447 kPa) in increments of 5 psig/kPa. Factory Default is 15 psig (103 kPa) from -5 to 5 psig in increments of 1.

Help Note:
This is the pressure limit algorithm that will, in sequence, Limit-Hold-Close vane opening.

Line Voltage Sensing Option

Line Voltage Sensing Option: [status]
Press (+)(-) to Change Setting

Possible values for status are: Installed and Not Installed (Factory Default).

Unit Line Voltage

This screen will not appear if the Line Voltage Sensing Option is not installed.

Unit Line Voltage: [volt]
Press (+)(-) to Change Setting

Possible values of [volt] are "180" through "6600" in 5 volt increments. Factory Default is 460 volts.

Auxiliary Condenser Option

Auxiliary Condenser Option: [status]
Press (+)(-) to Change Setting

Possible values for status are: Installed and Not Installed (Factory Default).

Heat Recovery Option

Heat Recovery Option: [status]
Press (+)(-) to Change Setting

Possible values for status are: Installed and Not Installed (Factory Default).

Hot Gas Bypass Option

Hot Gas Bypass Option : [status]
Press (+)(-) to Change Setting

Possible values for status are: Installed and Not Installed (Factory Default).

Free Cooling Option

Inlet Guide Vane Output
Has been Set to Stepper Motor

Free Cooling Option: [status]
Press (+)(-) to Change Setting

Possible values for status are: Installed and Not Installed (Factory Default).

Condenser Pressure Sensor Option

Condenser Press Sensor Option: [status]
Press (+) (-) to Change Setting

Possible values for status are: Installed and Not Installed (Factory Default).

Bearing Temperature Sensors Option

Bearing Temp Sensors Option: [status]
Press (+) (-) to Change Setting

Possible values for status are: Installed and Not Installed (Factory Default).

Discharge Temperature Sensor Option

Discharge Temp Sensor Option: [status]
Press (+) (-) to Change Setting

Possible values for status are: Installed and Not Installed (Factory Default).

Ice Building Option

Ice Building Option: [status]
Press (+) (-) to Change Setting

Possible values for status are: Installed and Not Installed (Factory Default).

Differential Water Press Sensing Option

Diff Wtr Press Sensor Opt: [status]
Press (+) (-) to Change Setting

Possible values for status are: Installed, <= 150 psig (1035 kPa), Installed, > 150 psig (1035 kPa), and Not Installed (Factory Default).

This option screen applies to both the Evap and Cond differential water pressure sensors for both systems less than or equal to 150 psig (Sensors at the Chiller Module) and systems greater than 150 psig (Sensors at the Options Module).

External Analog Input Type Selection, 4-20 ma/2-10 VDC

External Setpoint Inputs: [type]
Press (+) (-) to Change Setting

Possible values for status are: 4-20ma (Factory Default) and 2-10 VDC.

Tracer Option

Tracer Option: [status]
Press (+) (-) to Change Setting

Possible values for status are: Installed and Not Installed (Factory Default).

TCI Option

TCI Option: [status]
Press (+) (-) to Change Setting

Possible values for status are: Installed and Not Installed (Factory Default).

Printer Option

Printer Option: [status]
Press (+) (-) to Change Setting

Possible values for status are: Installed and Not Installed (Factory Default).

Duplex Control Module (DCM) Option

DCM Option: [status]
Press (+)(-) to Change Setting

Possible values for status are: Installed and Not Installed (Factory Default).

IGV Output Type

Inlet Guide Vane Output: [Y]
Press (+)(-) to Change Setting

Possible values for Y are: Stepper Motor (Factory Default) and Pulsed.

If Inlet Guide Vane Output is set to Pulsed and the Hot Gas Bypass Option is currently set to Installed, the Hot Gas Bypass Option will be set to Not Installed and the following will be displayed for 3 sec to indicate the change.

Hot Gas Bypass Option
Has Been Set to Not Installed

Oil Pressure Protection

Oil Pressure Protection: [status]
Press (+)(-) to Change Setting

Possible values for [status] are: Transducer (Factory Default), and Diff Switch, Xducer & Switch.

Programmable Analog Output

Program Analog Output: [Output]
Press <+> <-> To Change Setting

Possible values of [Output] are:

Not Used	% Cond Pres
% RLA	Refrig Diff Pres

Factory Default is % RLA.

Programmable Relay Outputs

The following represents three menu items and is repeated for [N] = 1, 2, or 3.

Program Relay [N]: [Relay]
Press <+> <-> To Change Setting

Possible values of [Relay] are:

Not Used	Limit Warning
Comp Running	Ice Making
MMR Alarm	Head Relief Request
MAR Alarm	Tracer Controlled
MMR + MAR Alarm	Max Capacity

Factory Default for

[N] = 1 is MMR + MAR Alarm.
[N] = 2 is Comp Running.
[N] = 3 is Not Used.

Current Transducer Setpoint

The following will only be displayed if starter type is set to "Stand Alone - No Starter Module".

Current Xducer: [Setting]
Press <+> <-> To Change Setting

Possible values for [Setting] are: Cutler Hammer; Other Factory Default is "Cutler Hammer"

Note: Select "Cutler Hammer" if starter has an A-1 module, otherwise select "Other".

Current Transducer at 100% RLA

The following will only be displayed if Current Transducer is set to "Other".

Current Xducer at 100% RLA: XX.X VDC
Press <+> <-> To Change Setting

Range of values is -10.0 to -5.0 VDC in increments of 0.1 VDC

Note: Calculate setpoint as follows:

Current Transducer at 100% RLA =

$$\frac{\textit{Machine LRA}}{\textit{CT Span}} X(-10)$$

Compressor Power Source

Cprsr Power Source: [status]
Press (+)(-) to Change Setting

Possible settings for [status] are: Utility (Factory Default) and Engine/Generator.

Refrigerant Monitor Settings Group

The Refrigerant Monitor Settings password is - - + + - - <Enter>. If the refrigerant monitor settings password is entered, the display goes to the menu defined below. If a key is not pressed every 10 minutes in this password protected menu, the display returns to the Chiller Operating Mode display of the Chiller Report, and the password must be entered again to return to this menu.

Refrigerant Monitor Settings Group Heading

Refrigerant Monitor Group Settings
Press (Next)(Previous) To Continue

Alarm Level 1

Alarm Level 1: XXXX PPM [Rfgt Type]
Press (+)(-) to Change Setting

Range of values are 3 to Alarm Level 2 minus 1 in increments of 1. The maximum value for R-123 is 30.

Alarm Level 2

Alarm Level 2: XXXX PPM [Rfgt Type]
Press (+)(-) to Change Setting

Range of values are Alarm Level 1 plus 1 to Alarm Level 3 minus 1 in increments of 1.

Alarm Level 3

Alarm Level 3: XXXX PPM [Rfgt Type]
Press (+)(-) to Change Setting

Range of values are Alarm Level 2 plus 1 to 1000 in increments of 1.

Refrigerant Audible Alarm

Refrigerant Audible Alarm: [Setting]
Press (+)(-) to Change Setting

Possible values are: Disable, Alarm 1, Alarm 2, Alarm 3.

Trouble Audible Alarm

Trouble Audible Alarm: [Status]
Press (+)(-) to Change Setting

Possible values of status are: Disable, Enable.

Alarm 1 Latching Status

Alarm 1 Latching Status: [Status]
Press (+)(-) to Change Setting

Possible values of status are: Latching, Non-Latching.

Alarm 2 Latching Status

Alarm 2 Latching Status: [Status]
Press (+)(-) to Change Setting

Possible values of status are: Latching, Non-Latching.

Alarm 3 Latching Status

Alarm 3 Latching Status: [Status]
Press (+)(-) to Change Setting

Possible values of status are: Latching, Non-Latching.

Channel Scanner

This item shall be displayed only when the refrigerant monitor mode is Warmup.

Channel Scanner: [Status]
Press (+)(-) to Change Setting

Possible values of status are: Installed, Not Installed.

Scanner Channel 1

Scanner Channel 1: [Status]
Press (+)(-) to Change Setting

Possible values of status are: Active, Inactive.

Scanner Channel 2

Scanner Channel 2: [Status]
Press (+)(-) to Change Setting

Possible values of status are: Active, Inactive.

Scanner Channel 3

Scanner Channel 3: [Status]
Press (+)(-) to Change Setting

Possible values of status are: Active, Inactive.

Scanner Channel 4

Scanner Channel 4: [Status]
Press (+)(-) to Change Setting

Possible values of status are: Active, Inactive.

Scanner Dwell Threshold

Scanner Dwell Threshold: XX %
Press (+)(-) to Change Setting

The range of values for Scanner Dwell Threshold is 30 to 70 in increments of 1.

Auxiliary Input

Auxiliary Input: [Status]
Press (+)(-) to Change Setting

Possible values of status are: Installed, Not Installed.

Auxiliary Input Alarm

Auxiliary Input Alarm: [Status]
Press (+)(-) to Change Setting

Possible values of status are: Enable, Disable.

Auxiliary Input Alarm Level: XX.X mA
Press (+)(-) to Change Setting

Range of values is 4.0 to 20.0 in increments of 0.1.

Auxiliary InputAlarm Direction:[Direction]
Press (+)(-) to Change Setting

Possible values of Direction are: Above, Below.

Auxiliary Input Audible Alarm:[Status]
Press (+)(-) to Change Setting

Possible values of Status are: Disable, Enable.

Analog Output Range

Analog Output Range: [Range] PPM
Press (+)(-) to Change Setting

Refrigerant Monitor Calibration

The Refrigerant Monitor Calibration password is - + - - + + <Enter> for the field calibration menu. If a refrigerant monitor calibration password is entered, the display goes to the menu items defined below. If a key is not pressed every 20 minutes in this password protected menu, the display returns to the Chiller Operating Mode display of the Chiller Report, and a refrigerant monitor calibration password must be entered again to return to this menu.

Refrigerant Monitor Settings Group Heading

This header is displayed if the field calibration password was entered.

Rfgt Monitor Field Calibration Group
Press (Next)(Previous) To Continue

This header is displayed if the factory calibration password was entered.

Rfgt Monitor Factory Calibration Group
Press (Next)(Previous) To Continue

Refrigerant Monitor Mode

Refrigerant Monitor Mode: [Mode]
Scanner Channel X XXXX PPM [Rfgt Type]

This item is displayed if the Channel Scanner is not installed.

Refrigerant Monitor Mode: [Mode]
XXXX PPM [Rfgt Type]

Refrigerant Zero Calibration

Refrigerant Zero Calibration
(Enter) to Start, (Next) to Continue

If <Next> is pressed the following refrigerant zero calibration screens are skipped. If <Enter> is pressed the following screens are displayed to permit refrigerant zero calibration.

Starting The Calibration Procedure
Please Wait

If the refrigerant monitor is unable to calibrate, the following item is displayed.

Unable to Calibrate

Otherwise, continue with the following screens.

Connect Refrigerant Zero Gas
(Next) To Continue, (Cancel) To Exit

Open Gas Sample Valve
(Next) To Continue, (Cancel) To Exit

XXXX PPM [Rfgt Type]
(Enter) To Adjust Conc, (Cancel) to Exit

Locking The Reading
Please Wait

If the refrigerant monitor is unable to calibrate, the following item is displayed.

Unable to Calibrate

Otherwise, the following screens continue.

Refrigerant Zero Calibration XXXX
Press (Enter)(Cancel)(+)(-) To Continue

Starting The Calibration Procedure
Please Wait

This item is followed by one of the following two items.

Successful Calibration

Calibration Failed
(Enter) To Retry, (Cancel) To Exit

If the <Enter> key is pressed, the display will return to the second menu item above. If the <Cancel> key is pressed, the display continues to the next display.

Refrigerant Span Calibration

Refrigerant Span Calibration
(Enter) to Start, (Next) to Continue

If <Next> is pressed the following refrigerant span calibration screens are skipped. If <Enter> is pressed the following screens are displayed to permit refrigerant span calibration.

Starting The Calibration Procedure
Please Wait

If the refrigerant monitor is unable to calibrate, the following item is displayed.

Unable to Calibrate

Otherwise, the following screens continue.

Connect Refrigerant Span Gas
(Next) To Continue, (Cancel) To Exit

Open Gas Sample Valve
(Next) To Continue, (Cancel) To Exit

XXXX PPM [Rfgt Type]
(Enter) To Adjust Conc, (Cancel) to Exit

Locking The Reading
Please Wait

If the refrigerant monitor is unable to calibrate, the following item is displayed.

Unable to Calibrate

Otherwise, the following screens continue.

Refrigerant Span Calibration XXXX
Press (Enter)(Cancel)(+)(-) To Continue

Starting The Calibration Procedure
Please Wait

This item is followed by one of the following two items.

Successful Calibration

Calibration Failed
(Enter) To Retry, (Cancel) To Exit

If the <Enter> key is pressed, the display returns to the second menu item above. If the <Cancel> key is pressed, the display continues to the next display.

Service Tests Group

***Important!** FACTORY DEFAULT SETTINGS: Menu items that are programmable using the keypad may have a selectable choice that is listed as Factory Default. This Factory Default setting is the software default that is initially factory-programmed for a new module assembly and may NOT be the correct setting for a specific operating chiller. Always review all settings when any module is replaced to verify that the settings agree with the desired settings that were selected at initial startup or programmed at the factory.*

Service Tools Group Password Request

Pswd Reqd to Access Service ToolsGroup
Please Enter Password

The Service Tools Password is + + - - + + <Enter>. Successfully entering the password sends you to the Service Tools Group Heading Screen as defined below.

Pressing the <Next> and Increment keys simultaneously while the Service Tools Group Password Request screen is displayed will send you to the CLD-Chiller IPC communications screen shown below. This screen can be used as a debugging tool when CLD-Chiller IPC communications are suspect. The first line on the comm screen indicates which Chiller packets the CLD is checking. The second line on the comm screen indicates how many times in a 15 second interval the particular packet was received by the CLD. If a packet is received more than 9 times in the interval, a "+" is displayed. The counters are reset to 0 every 15 seconds. Hitting any key while on this screen will cause an exit.

Packet#:2 3 4 5 6 7 8 9 10 11 12 14 15
Received:x x x x x x x x x x x x x

If any item in the Service Tools Group is in manual override, the alarm LED will be on and non-flashing. The following table contains the Service Tools setpoints which affect the alarm light.To turn the alarm light off (from an on and non-flashing state), all the conditions applicable to the unit type must be satisfied.

Unit Type:	Function / Setpoint:	Condition to Turn Off manual Alarm LED:
ALL	"Chilled Water Pump:"	Auto
ALL except CVAE	"Condenser Water Pump:"	Auto
CTV	"Oil Pump:"	Auto
CTV with IGV Output set to Stepper Motor.	"Vane Control:"	Auto
CTV with HGBP installed:	"HGBP Valve Control Is:"	Auto
CTV with IGV Output set to Pulsed.	"IGV Control Is:"	Auto
CTV with AF starter:	"AF Manual Speed Control:"	Disable

Service Tools Group Heading

Service Tests & Overrides
Press (Next)(Previous) To Continue

This header appears when the headers do not appear in the Service Settings menu.

Chilled Water Pump

Chilled Water Pump: [Status]
Press (+)(-) to Change Setting

Possible values for Status are: Auto (Factory Default) and On.

Chilled Water Flow Switch Status

This screen displays the status of the chilled water flow switch status at the input to the UCM.

Chilled Water Flow Switch Status:
[y]

Possible values for [y] are: Flow Switch is Open/No Flow and Flow Switch is Closed/Flow.

Evaporator Differential Water Pressure

The following will be displayed only if the Differential Water Pressure Sensor Option is Installed.

Evap Differential Wtr Press: xx.x psid/kPa
Press (Next)(Previous) To Continue

Evaporator Entering/Leaving Water Pressure

The following will be displayed only if the low pressure (< or = to 150 psig) Differential Water Pressure Sensor Option is Installed.

Evap Entering Water Pressure:xx.x psid/kPa
Evap Leaving Water Pressure: xx.x psid/kPa

Condenser Water Pump

Condenser Water Pump: [Status]
[y]

Possible values for Status are: Auto (Factory Default) and On.

Possible values for [y] are: Press (+)(-) to Change Setting.

Condenser Water Flow Switch Status

This screen displays the status of the condenser water flow switch status at the input to the UCM.

Condenser Water Flow Switch Status:
[y]

Possible values for [y] are: Flow Switch is Open/No Flow and Flow Switch is Closed/Flow.

Condenser Differential Water Pressure

The following will be displayed only if the Differential Water Pressure Sensor Option is Installed.

Cond Differential Wtr Press: xx.x psid/kPa
Press (Next)(Previous) To Continue

Condenser Entering/Leaving Water Pressure

The following will be displayed only if the low pressure (< or = to 150 psig) Differential Water Pressure Sensor Option is Installed.

Cond Entering Water Pressure:xx.x psid/kPa
Cond Leaving Water Pressure: xx.x psid/kPa

Starter Dry Run

Use the following screen when [xx] = "Disabled".

Starter Dry Run: [xx]
Press +/- to Change

Use the following screen when [xx] Not equal to "Disabled".

Starter Dry Run: [xx]
(+) (-) (Enter): Trans Compl Inp: [y]

Possible values of [xx] are: Disabled (Factory Default), Shorting Relay On, Run Relay On, Start Relay On, Transition Relay On, and Start and Run Relays On.

Possible values of [y] are:

Closed This denotes that the Transition Complete input is seeing a contact closure.

Open This denotes that the Transition Complete input is seeing a contact open.

If the unit is not in the local Stop mode the following is displayed.

Starter Dry Run: Disabled
Unit Must Be In Local Stop To Execute

Oil Pump Status

This screen is displayed only if "Oil Pressure Protection" is set to "Transducer" or "Xducer & Switch."

Oil Pump: [Status]
Differential Oil Pressure: xx.x psid

Possible values for Status are: Auto (Factory Default) and On.

Differential Oil Pressure is not a setpoint but a status display.

Vane Control Status/Vane Position Commands

The following screens will be displayed only when the "Inlet Guide Vane Output" is set to "Stepper Motor".

Vane Control Is: [Status]
Press (+) (-) to Change Setting

The possible values of [status] are "Auto" or "Manual". Factory Default is "Auto".

If the vane control status is "Auto" the following is displayed:

Inlet Guide Vane Position: xxx.x %Open
[Limit mode]

If the vane control status is "Manual" the following is displayed. When the Vane Control Status is transitioned from "Auto" to "Manual", the manual target is initialized to the current vane position.

Vane Pos xxx.x % Target xxx.x % Open
LWT = xx.x [limit mode]

The possible values of limit mode are: "Current Limit", "Condenser Limit", "Evap Limit", and "(+) (-) and <Enter>".

Vane Position

The following screen will be displayed only when the "Inlet Guide Vane Output" is set to "Stepper Motor".

Inlet Guide Vane Position: xxxxx steps
Inlet Guide Vane Position:xx.x degrees

HGBP Valve Control Status/Manual Open and Close Commands

If HGBP is installed in the unit, the following screen is displayed:

HGBP Valve Control Is: [Status]
LWT = xx.x f/c [Y]

The possible values of [status] are "Auto", "Hold", "Open", or "Close". Factory Default is "Auto".

The possible values of Y are: "Current Limit", "Condenser Limit", "Evap Limit", and (+)-) and <Enter>". The latter is displayed when there are no limits operating.

HGBP Valve Manual Opening/Closing Duty Cycle

If HGBP is installed in the unit, the following screen is displayed:

Manual Opening/Closing Duty Cycle: xx%
Press (+)(-) to Change Setting

Range of values is 0 to 50% in increments of 1%. Factory Default is 30%.

Vane Control Status/Manual Load and Unload Commands

The following screen will be displayed only when the "Inlet Guide Vane Output" is set to "Pulsed".

IGV Control Is: [Status]
LWT = xx.x f/c [Y]

The possible values of [status] are "Auto", "Hold", "Load", or "Unload". Factory Default is "Auto".

The possible values of Y are: "Current Limit", "Condenser Limit", "Evap Limit", and "(+)(-) and <Enter>". The latter is displayed when there are no limits operating.

Manual Loading/Unloading Duty Cycle

The following screen will be displayed only when the "Inlet Guide Vane Output" is set to "Pulsed".

Manual Loading/Unloading Duty Cycle: xx%
Press (+)(-) to Change Setting

Range of values is 0 to 50% in increments of 1%. Factory Default is 30%.

Condenser Fan 3 [Status]
Fan 1 [x] Fan 2 [y] Fan 3 [z].....

Possible values for Status are: Auto (Factory Default) and On

Fan 1, Fan 2, and Fan 3 are not setpoints but a status display.

Possible values for x,y,z are Auto/On and On/Off.

Note: status display (2nd line) does not appear while in free cooling mode.

AF Manual Speed Control - CVHE/F/G Only

The following is displayed only if the Starter Type is "Adaptive Frequency" or "AFDB" or the Compressor Power Source is Engine/Generator.

AF Manual Speed Control: [d/e]
Press (+)(-) to Change Setting

The possible values of [d/e] are: Disable (Factory Default) and Enable.

AF Compressor Speed Command - CVHE/F/G Only

The following is displayed only if the Starter Type is "Adaptive Frequency" or "AFDB", or the Compressor Power Source is Engine/Generator, and AF Manual Speed Control is Enabled.

AF Compressor Speed Command: xxxx RPM
Press (+)(-) to Change Setting

Range of values is 2520 to 3600 RPM for "Adaptive Frequency" Starter Type (2280 to 3600 RPM for "AFDB" Starter Type) in increments of 1 RPM. Factory Default is 3600 RPM.

AF Compressor Speed Command - CVHE/F/G Only

The following is displayed only if the Starter Type is "Adaptive Frequency" or AFDB" or the Compressor Power Source is Engine/Generator.

AF Compressor Speed Command: xx.x Hz
AF Compressor Speed Command:xxxx.x RPM

Note This is a Report only for Troubleshooting purposes.

AF Boundary Pressure Coefficient/AF Pressure Coefficient - CVHE/F/G Only

The following is displayed only if the Starter Type is "Adaptive Frequency" or "AFDB" or the Compressor Power Source is Engine/Generator.

AF Boundary Press Coefficient: x.xxx
AF Pressure Coefficient: x.xxx

Note This is a Report only for Troubleshooting purposes.

AF Re-Optimization Timer Time Remaining- CVHE/F/G Only

The following is displayed only if the Starter Type is "Adaptive Frequency" or "AFDB" or the Compressor Power Source is Engine/Generator.

AF Re-Optimization Time Remaining:x.xx Hrs
Press (+)(-) to Change Setting

Note This is a Report only for Troubleshooting purposes.

Module Software Revision Levels

Press (Enter) To Display Software Revision Levels Or (Next) To Continue

If <Enter> is selected the following screen can be displayed 5 times with 5 different pairs of modules.

[Module 1:] [Revision Level]
[Module 2:] [Revision Level]

Module 1/2 will be one of the following: Chiller, Circuit, Starter, Options, Stepper 1, Stepper 2, TCI, Purge, LCLD, RCLD, I/O, Refrigerant Monitor, Scorpio, DCM.

Revision Level will either be an integer representing the software version number of the particular module or occurrence of a diagnostic, the display will automatically go to this menu and display certain messages as explained in the next section "Diagnostics Menu."

Diagnostics Menu

The Diagnostics Group is where all diagnostics, both historical and active are presented. The group also contains the facility to clear active diagnostics, historic diagnostics, and purge diagnostics as individual groups. To clearly annunciate the occurrence of a diagnostic, the display will automatically go to this menu and display certain messages as explained below. The following illustration gives an overview of how the diagnostic key and screens below it work.

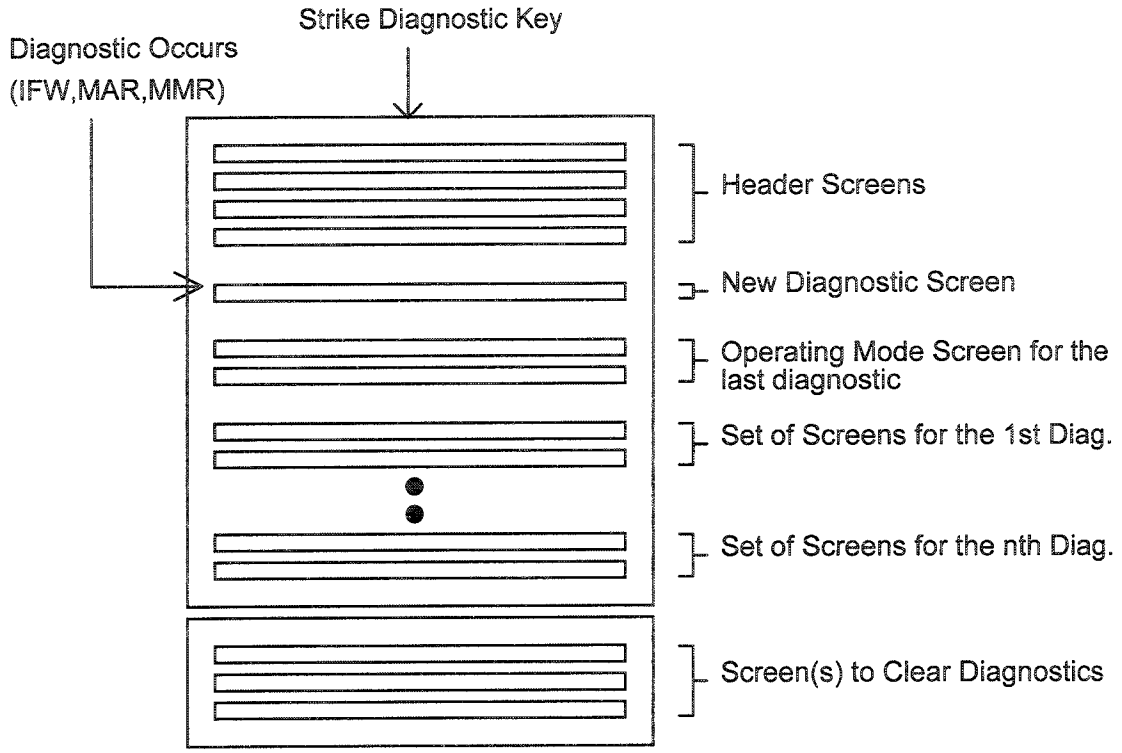

Diagnostics Group Heading

Active & Historic Diagnostics
Press (Next)(Previous) To Continue

Menu Settings Password

If the Menu Settings Password is Enabled in the Service Setup Group, following each setting group heading the following will be displayed:

Settings In This Menu Are [status]
[password message]

Likewise, if the Menu Settings Password is Disabled in the Service Setup Group, the above screen will not appear.

The possible values for status are "Locked" or "Unlocked". If the password status is locked, the password message will be "Enter Password to Unlock". The user will then depress "-+-+-+" followed by the <Enter> key. The password keystrokes will be echoed to the screen as a visual aide. The last six keystrokes represent the current password, and up to twenty keystrokes can be entered. An incorrect password, or the twenty-first keystroke will result in the password message "Invalid Password".

If the password status is unlocked, the password message will be "Press (Enter) to Lock". Any attempt to change the setting will result in the message "Setting is Locked". The password, once entered, will remain valid until canceled.

Diagnostics and Annunciation

If there are no diagnostics present, only the following screen will be displayed under the Diagnostics Group heading screen.

No Diagnostics Present
Press (Next) (Previous) To Continue

If there are any diagnostics present, the following 3 screens are displayed sequentially when the <Next> key is pressed. The first screen is:

Diagnostic Report Follows
Press (Next) For More

The second screen is:

Press (Enter) To Display Operating Mode
At Time Of LastDiagnostic or(Next)For More

The third screen is the chiller operating mode display that was present at the time that the most recent diagnostic occurred.

If there are one or more diagnostics present, the following displays will be inserted into the display sequence. Diagnostics will be listed in order of occurrence from newest to oldest. Diagnostics will be displayed on 2 screens. The two screens will vary slightly depending on whether the diagnostic is active or historic.

The first active diagnostic screen will be:

[sequence number] [diagnostic]
(Next) [diagnostic type]

The sequence number will run from 1 through n (n <= 20) and number the diagnostics sequentially where the most recent diagnostic is sequence number [01].

The possible replacements for "diagnostic type" are:

Warning Only - Reset Not Reqd (Applies to all IFW diagnostics.)

Unit Shutdown - Reset Reqd (Applies to all MMR diagnostics)

Unit Shutdown - Automatic Reset (Applies to all MAR diagnostics)

The second active diagnostic display screen will contain the diagnostic sequence number, a time and date stamp, and a help message suggesting possible service procedures. The second active diagnostic display screen will be:

[sn] occurred at HH:MM xm Mon xx, 199x
[help message]

The time will be displayed as xx:xx am/pm.

The date will be displayed as month - date- year.

The month will use a standard 3-letter abbreviation. The year will not be abbreviated.

Depressing the next key will advance the display to the next diagnostic in the sequence.

The first historic diagnostic screen will be:

[sequence number] [Diagnostic]
Historic Only, Press (Next) For More

The definitions of diagnostic and sequence number are the same as for the active diagnostic messages. If <Next> is pressed the second historic diagnostic screen is displayed. The second historic diagnostic screen will be:

[sn] occurred at HH:MM xm Mon xx, 199x
Historic Only, Reset At End Of Diag Menu

Up to 20 diagnostics will be displayed.

Clearing Diagnostics

At the end of the diagnostic menu, there will be 4 screens that allow the user to Clear/Reset the different diagnostic groups.

If any active diagnostics are present, the following screen will be displayed:

Press (Enter) To Clr Active Diagnostics
And Shutdown / Reset System

If the <Enter> key is pressed, the following message is displayed for 2 seconds:

Active Diagnostics Have Been Cleared
System Is Resetting

The display will be reset to the operating mode screen of the chiller report after this message clears.

If any historic diagnostics are present, the following screen will be displayed:

Press (Enter) To
Clear Historic Diagnostics

If the <Enter> key is pressed, the following message is displayed for 4 seconds:

Historic Diagnostics Have Been Cleared
Diagnostic Report Is Being Reset

The display will be reset to the top of the Diagnostic Menu after this message clears.

If any purge diagnostics are present, the following screen will be displayed:

Press (Enter) To
Clear Purge Diagnostics

If the <Enter> key is pressed, the following message is displayed for 4 seconds:

Purge Diagnostics Have Been Cleared
Diagnostic Report Is Being Reset

The display will be reset to the top of the Diagnostic Menu after this message clears.

If any IPC refrigerant monitor diagnostics are present, the following screen will be displayed:

Press (+) To
Silence Rfgt Mon Audible Alarm

Note: Pressing <+> will silence the audible alarm. The IPC refrigerant monitor will cause all the refrigerant monitor alarms (diagnostics) to become non-latching for approximately 7.5 seconds. This allows any latching alarms to clear if the trip condition has been removed. This clearing function differs from the balance of UCP2 in that the balance of UCP2 diagnostics are cleared on reset and reestablished if the trip condition is still present.

If the <+> key is pressed, the following message is displayed for 4 seconds:

Silencing Rfgt Mon Audible Alarm
Clearing Nonactive Rfgt Alarms

New Diagnostic Display

When a new diagnostic is sensed by the system, the display will reset to the diagnostic menu. A "one-time" screen will be displayed to inform the user that a new diagnostic has been detected. This screen will vary depending on the type of diagnostic detected. The two major categories of diagnostics are those which are informational only, and those which have resulted in machine shutdown.

If the diagnostic is an MMR/MAR, the screen will be:

*** A MACHINE SHUTDOWN HAS OCCURRED ***
Press (Next) For More

Otherwise, the screen will be:

A New Warning Has Been Detected
Press (Next) For More

This screen will be inserted into the diagnostic menu directly after the "Diagnostic Report Follows" screen. Pressing <Next> will therefore take the user to the "Press (Next) to display operating mode at time of last diagnostic" screen. If <Next>or <Previous> is pressed, this screen will no longer be in the display sequence.

Diagnostics

In the table following, a "Latching" diagnostic is a condition which will cause the machine or a portion of the machine as noted to shut down and will require a manual reset to restore operation. A diagnostic that is non-latching is reset automatically when the condition causing the diagnostic goes away. A non-latching diagnostic will shut down the machine or a part of the machine if so indicated. If a diagnostic is information only, no machine action is taken.

Unless otherwise stated, all active diagnostics will be lost on loss of power.

Diagnostic Types And Action

MMR = Machine Shutdown - Manual Reset

MAR = Machine Shutdown - Auto Reset

IFW = Information Warning - May affect machine operation; lowest level of diagnostic

Remotely Resettable Diagnostics:

Except for the following, all diagnostics can be reset remotely from either the Remote Clear Language Display, the Tracer, or the External Diagnostic Reset input at the Options Module. The following diagnostics shall only be resettable ONLY at the Local Clear Language Display, e.g. with the operator standing at the unit.

Table 5

DIAGNOSTIC DESCRIPTION	Diag Type	Can Be Remotely Reset
Starter Contactor Interrupt Failure	MMR	No
Low Evap Rfgt Pressure	MMR	No
Phase Loss	MMR	No
Phase Reversal	MMR	No
High Bearing #1 Temp	MMR	No
High Bearing #2 Temp	MMR	No
Current Overload	MMR	No
Cprsr did not Accelerate: Shutdown	MMR	No
Starter did not Transition	MMR	No
High Pressure Cutout Tripped	MMR	No
Low Evap Rfgt Temp.	MMR	No
Emergency Stop Input	MMR	No
Starter Dry Run Test	MMR	No
Solid State Starter Fault Rly Open	MMR	No
Adapt Freq Drive Fault Relay Open	MMR	No
High Motor Temp Position #1	MMR	No
High Motor Temp Position #2	MMR	No

DIAGNOSTIC DESCRIPTION	Diag Type	Can Be Remotely Reset
High Motor Temp Position #3	MMR	No
Severe Phase Unbalance	MMR	No
Starter Fault Type I	MMR	No
Starter Fault Type II	MMR	No
Starter Fault Type III	MMR	No
Cprsr did not Accelerate Fully	MMR	No
High Cprsr Discharge Temp.	MMR	No
Phase Seq Monitor: Phase Reversal	MMR	No
Transition Complete Input Shorted	MMR	No
At Speed Input Shorted	MMR	No
Transition Complete Input Opened	MMR	No
At Speed Input Opened	MMR	No

Table 6
Diagnostic Table

DIAGNOSTIC DESCRIPTION	Diag Type	Module that Called Diag.	Diag. Active Modes	CAUSE	Help Message
Adapt Freq Drive Fault Relay Open	MMR	Starter	All Start and Run Mode	The Adaptive Frequency Drive fault relay is open.	See Adaptive Frequency Drive Service Bulletin, check for an open wire.
At Speed Input Shorted	MMR	Starter	Pre-Start	a. Using either a Solid State Starter or an Adaptive Frequency Drive, the Up to Speed/At Speed input was found to be shorted before the compressor was started. b. Applies only to Solid State Starters and Adaptive Frequency Drives.	Check End of Limt/At Speed Input
At Speed Input Opened	MMR	Starter	All Running Modes	a. The At Speed input was found to be opened with the compressor motor running after successfully obtaining at speed condition. b. Applies only to Solid State Starters.	Check End of Limt/At Speed Input
Aux/Ht Rcvry Ent Water Temp Sensor	IFW	Options	All	Open or shorted and Heat Recovery is installed (at the CLD).	Check Sensor, Wiring, and Connections
Aux/Ht Rcvry Lvg Water Temp Sensor	IFW	Options	All	Open or shorted and Heat Recovery is installed (at the CLD).	Check Sensor, Wiring, and Connections
Bearing Temp Sensor #1	MMR	Stepper	All	Open or Short, only if this option is enabled at the Human Interface.	Check Sensor, Wiring And Connections
Bearing Temp Sensor #2	MMR	Stepper	All	Open or Short, only if this option is enabled at the Human Interface.	Check Sensor, Wiring And Connections
Check Clock	IFW	Chiller	All	On loss of power the clock does not keep time, if there is an extended power loss (greater than 15 seconds) this diag. is also generated to alert the operator to check the clock.	Check Main Power Supply, Reset Clock
Check Oil Filter	IFW	Chiller	All Running Modes	a. The differential oil pressure fell below the Check Oil Filter Setpoint for 1000 psid-seconds and the Check Oil Filter Diagnostic setpoint is enabled. b. This diagnostic shall not be active for 15 minutes after the compressor is started. c. This IFW diagnostic will automatically reset when the differential oil pressure rise above the Check Oil Filter Setpoint for 1000 psid-seconds or the compressor is not running.	

DIAGNOSTIC DESCRIPTION	Diag Type	Module that Called Diag.	Diag. Active Modes	CAUSE	Help Message
Chilled Water Flow Lost	MAR	Chiller	Chilled Water Control: (All Stop modes) All modes except STOP (00) and EXTERN AL STOP (100) Hot Water Control: Start and All Run Modes.	a. The chilled water flow switch input was open for more than 6-10 contiguous seconds. b. 6-10 seconds of contiguous flow shall clear this diagnostic. c. Even though the pump times out in the STOP modes, this diagnostic shall not be called out in the STOP modes.	Check Pump, Valves, Flow Switch
Chiller: Loss of Comm with Purge	IFW	Chiller	All	The chiller module lost communications with the Purge module for 15 contiguous seconds.	Check IPC Wiring/ Connections
Chiller: Loss of Comm with Starter	MMR	Chiller	All	The chiller module lost communications with the Starter module for 15 contiguous seconds.	Check IPC Wiring/ Connections
Chiller: Loss of Comm with Options	IFW	Chiller	All	The chiller module lost communications with the Options module for 15 contiguous seconds. This IFW diagnostic is generated if Free Cooling is Not Installed, otherwise this is an MMR diag. under code 2F6	Check IPC Wiring/ Connections
Chiller: Loss of Comm with Circuit	MMR	Chiller	All	The chiller module lost communications with the Circuit module for 15 contiguous seconds.	Check IPC Wiring/ Connections
Chiller: Loss of Comm with I/O Mod	IFW	Chiller	All	The chiller module lost communications with the I/O module for 15 contiguous seconds; And HGBP is installed (at the CLD).	Check IPC Wiring/ Connections
Chiller: Loss of Comm with I/O Mod	MMR	Chiller	All	The chiller module lost communications with the I/O module for 15 contiguous seconds; And Pulsed IGV is installed (at the CLD).	Check IPC Wiring/ Connections
Chiller: Loss of Comm with DCM	IFW	Chiller	All	The DCM was setup as "installed" at the CLD and the chiller module lost communications with the DCM module for 15 contiguous seconds	Check IPC Wiring/ Connections
Chiller: Loss of Comm with Stepper #1	MMR	Chiller	All	The chiller module lost communications with the Stepper #1 module for 15 contiguous seconds.	Check IPC Wiring/ Connections
Chiller: Loss of Comm with Local CLD Note: As implemented this is a latching IFW diagnostic. That is, once generated it cannot be re-generated until a manual reset is done.	IFW-AR	Chiller	All	The chiller module lost communications with the LCLD module for 15 contiguous seconds.	Check IPC Wiring/ Connections
Chiller: Loss of Comm with Options	MMR	Chiller	All	The chiller module lost communications with the Options module for 15 contiguous seconds. This MMR diagnostic is generated if Free Cooling is Installed, otherwise this is an IFW diag. under code 2AE	Check IPC Wiring/ Connections

DIAGNOSTIC DESCRIPTION	Diag Type	Module that Called Diag.	Diag. Active Modes	CAUSE	Help Message
Chiller: Loss of Comm with Rfgt Monitor	IFW-AR	Chiller	All	The Chiller module lost communications with the Refrigerant Monitor for 15 contiguous seconds.	Check IPC Wiring/ Connections
Chiller: Loss of Comm with TCI	IFW	Chiller	All	The Tracer was setup as "installed" at the CLD and the chiller module lost communications with the TCI (comm 3 or comm 4) module for 15 contiguous seconds	Check IPC Wiring/ Connections
Chiller Mod Off-Brd 5V Range	IFW	Chiller	All	An improper Off Board 5v voltage was detected at the Chiller Module. A 5vdc is used for off-board devices such as the pressure transducers. The micro checks to see that the A/D value falls within an acceptable range.	Check Chiller Module Voltages
Chiller Mod Ref Voltage Calibration	IFW	Chiller	All	An improper reference voltage was detected at the Chiller Module. A 2.5 vdc reference is used to calibrate the non-ratiometric analog I/O such as 2-10vdc and 4-20ma inputs as well as PWM Analog outputs. The micro checks to see that the A/D value falls within an acceptable range. This diagnostic has not been implemented	Check Chiller Module Voltages
Chlr Sat Cond Temp Sensor (Purge) (As Sensed by the Purge module in Retrofit applications)	IFW	Purge	All	Open or Shorted Sensor a. Applies to Retrofit applications of the Purge Only. Does not apply to UCP2 applications. b. IFW to the chiller, MMR to the Purge.	Purge Inop: See Purge O & M Manual
Circuit: Loss of Comm with Starter	MMR	Circuit	All	The circuit module lost communications with the Starter module for 15 contiguous seconds.	Check IPC Wiring/ Connections
Circuit: Loss of Comm with Chiller	MMR	Circuit	All	The circuit module lost communications with the Chiller module for 15 contiguous seconds. On loss of communications, the circuit module shall run the oil pump for the post lube time and then turn the oil pump off. On loss of communications, the circuit module shall continue to control the oil heater.	Check IPC Wiring/ Connections
Circuit Module 24 Vdc Ref Missing	IFW	Circuit	All	24vdc reference missing and the Rfgt monitor is installed.	Check Rfgt Monitor Wiring/ 24 Vdc Supply.
Circuit Mod Off-Brd 5V Range	MMR	Circuit	All	An improper Off Board 5v voltage was detected at the Circuit Module. A 5vdc is used for off-board devices such as the pressure transducers. The micro checks to see that the A/D value falls within an acceptable range.	Check Circuit Module Voltages
Circuit Mod Ref Voltage Calibration	IFW	Circuit	All	An improper reference voltage was detected at the Circuit Module. A 2.5 vdc reference is used to calibrate the non-ratiometric analog I/O such as 2-10vdc and 4-20ma inputs as well as PWM Analog outputs. The micro checks to see that the A/D value falls within an acceptable range.	See Troubleshooting Service Bulletin
Cond Diff Water Press Transducer	IFW	Options	All	Input Shorted or Open and the Diff. water pressure sensing option, > 150 psig, is "installed" at the CLD.	Check Sensor, Wiring, and Connections
Cond Entering Wtr Temp Sensor	IFW	Chiller	All	Open or Short	Check Sensor, Wiring And Connections
Cond Leaving Wtr Temp Sensor	See Description	Chiller	All	Open or Short. a. IFW on Chilled Water Control b. MMR on Heat Pump (Hot Water) Control.	Check Sensor, Wiring And Connections

DIAGNOSTIC DESCRIPTION	Diag Type	Module that Called Diag.	Diag. Active Modes	CAUSE	Help Message
Condenser Rfgt Pressure Sensor	MMR	Circuit	All	Open or Short. Must Hold on open AND short input is 2.0 Psia. Design: Both opens and shorts result in the pressure going to the low end of the scale. Therefore a Must Hold on the high pressure end is not required.	Check Sensor, Wiring And Connections
Condenser Rfgt Temp Sensor	MMR	Stepper	All	Open or Short	Check Sensor, Wiring And Connections
Condenser Water Flow Lost	MAR	Chiller	Chilled Water Control: Start and All Run Modes. Hot Water Control: (All Stop modes)	a. The chilled water flow switch input was open for more than 6-10 contiguous seconds. b. 6-10 seconds of contiguous flow shall clear this diagnostic. c. Even though the pump times out in the STOP modes, this diagnostic shall not be called out in the STOP modes.	Check Pumps, Valves, Flow Switch
Condenser Water Flow Overdue	MAR	Chiller	Estab. Cond Water Flow	Condenser water flow was not proven within 4.25 minutes of the condenser pump relay being energized.	Check Pump, Valves, Flow Switch
Condenser Water Pressure Sensor	IFW	Chiller	All	Open or Short and the Cond Water Pressure Sensor is setup as installed at the Clear Language Display.	Check Sensor, Wiring, and Connections
Cprsr did not Accelerate: Shutdown	MMR	Starter	Start Mode	a. The compressor did not come up to speed in the allotted time defined by the Maximum Acceleration Timer. b. The Human Interface setups defined "Shutdown" as the action when the Maximum Acceleration Timer was exceeded.	Check Main Power Supply & Wiring
Cprsr did not Accelerate Fully	MMR	Starter	Starting	a. Using either a Solid State Starter or an Adaptive Frequency. Drive the UCM did not receive an Up to Speed or At Speed Signal within the Maximum Acceleration Timer Setting. b. Applies only to Solid State Starters and Adaptive Frequency. Drives.	Check End of Limt/At Speed Input
Cprsr Did Not Accelerate: Transition (The Motor is put across the line.)	IFW	Starter	Start Mode	a. The compressor did not come up to speed in the allotted time defined by the Maximum Acceleration Timer. b. The Human Interface setups defined "Transition" as the action when the Maximum Acceleration Timer was exceeded.	See Troubleshooting Service Bulletin
Current Overload	MMR	Starter	All Running Modes	Motor current exceeded overload time vs. trip characteristic.	Check Main Power Supply & Wiring
Current Overload Setpts Error	IFW	Starter	All	a. The redundant overload settings did not agree for 30 contiguous seconds. (Continue to use the previous value for the 30 second timeout.) When this diagnostic occurs the affected Starter Module shall use the minimum (00000 binary, 00 decimal) overload setting as a default until either the UCM is reset or, if the redundant settings agree again, the starter module can go back to using the actual setting.	Review Overload Set Up

DIAGNOSTIC DESCRIPTION	Diag Type	Module that Called Diag.	Diag. Active Modes	CAUSE	Help Message
CWS/Leaving Wtr Temp. Cutout Setpt Overlap also overlap of CWS and Low Refrigerant Temp Cutout.	None	None	All	No diagnostic, limit value to last legal value and tell the operator about it on the second line of the display. NOTE: The above is not a diagnostic because you don't want the display vectoring you to a different display state when you are trying to set either the chilled water setpoint or the leaving water temp. cutout setpoint as it will in the case of a diagnostic.	N/A
DCM: Loss of Comm with Chiller A	IFW	Chiller	All	The DCM module lost communications with the chiller A Chiller module for 15 contiguous seconds	Check IPC Wiring/ Connections
DCM: Loss of Comm with Chiller B	IFW	Chiller	All	The DCM module lost communications with the chiller B Chiller module for 15 contiguous seconds	Check IPC Wiring/ Connections
DCM: Loss of Comm with Starter A	IFW	Chiller	All	The DCM module lost communications with the chiller A Starter module for 15 contiguous seconds	Check IPC Wiring/ Connections
DCM: Loss of Comm with Starter B	IFW	Chiller	All	The DCM module lost communications with the chiller B Starter module for 15 contiguous seconds	Check IPC Wiring/ Connections
DCM: Loss of Comm with TCI A	IFW	Chiller	All	The DCM module lost communications with the chiller A TCI module for 15 contiguous seconds	Check IPC Wiring/ Connections
DCM: Loss of Comm with Stepper A	IFW	Chiller	All	The DCM module lost communications with the chiller A Stepper module for 15 contiguous seconds	Check IPC Wiring/ Connections
Differential Oil Pressure Overdue	MMR	Circuit	Pre-Lube	A differential oil pressure 0f 9 psid was not established within 3 minutes of starting the Oil Pump in the Pre-Lube Mode. Design: Some hysteresis was introduced into this diagnostic. 9 psid is the criteria to establish pre-lube oil flow and 8 psid is used to define a loss of oil flow on pre-lube.	See Troubleshooting Service Bulletin
Differential Oil Pressure Switch (CVGD and CVAD units only)	MMR	Circuit	Pre-Lube	Just prior to starting the oil pump the Differential Oil Pressure Switch is checked to be sure it's contacts are open (not stuck or jumpered), if not set this diagnostic.	Check Oil Pressure Switch/Wiring.
Discharge Temp Sensor	MMR	Stepper	All	Open or Short, only if HGBP and the Discharge Temp. Sensor is called out as "Installed" at the Human Interface.	Check Sensor Wiring And Connections
Emergency Stop Input	MMR	Chiller	All	a. EMERGENCY STOP input is open. An external interlock has tripped. Time to trip from input opening to unit stop shall be 0.1 to 1.0 seconds.	Check Emergency Stop Input Device
Evap Diff Water Press Transducer	IFW	Options	All	Input Shorted or Open and the Diff. water pressure sensing option, > 150 psig, is "installed" at the CLD.	Check Sensor, Wiring, and Connections
Evap Entering Wtr Temp Sensor	IFW	Chiller	All	Open or Short a. Normal operation, no effects on control. b. Chilled Water Reset, Will just run at either normal CWS or will run at maximum reset permitted.	Check Sensor, Wiring And Connections
Evap Leaving Water Temp Sensor	MMR	Chiller	All	Open or Short	Check Sensor, Wiring And Connections

DIAGNOSTIC DESCRIPTION	Diag Type	Module that Called Diag.	Diag. Active Modes	CAUSE	Help Message
Evap Rfgt Temp Sensor	MMR	Stepper	All	Open or Short	Check Sensor, Wiring And Connections
Evap Water Pressure Sensor	IFW	Chiller	All	Open or Short and the Evap Water Pressure Sensor is setup as installed at the Clear Language Display.	Check Sensor, Wiring, and Connections
Evaporator Water Flow Overdue	MAR	Chiller	Estab. Evap. Water Flow on going from STOP to AUTO.	Evaporator water flow was not proven within 4.25 minutes of the Evaporator pump relay being energized.	Check Pump, Valves, Flow Switch
Extended Compressor Surge	MMR	Starter	All Running Modes	An extended Surge condition was detected and the Surge protection feature was Enabled at the Clear Lang. Display. An extended Surge condition is defined being in a "continuous" surge condition for 15 ± 10% minutes.	Check Condenser Water Temp.
Extended Power Loss Note: This diagnostic and the functions tied to it are handled by the Check Clock diagnostic.	IFW	Starter	All	The unit lost power for an extended period of time. On CTV units if power is lost for an extended period of time the oil pump is not run on Power Up. If a power loss is determined to be a Momentary Power Loss the Oil Pump is run on the Power Up to Post Lube the bearings. The deciding factor determining if a power loss is Extended or Momentary is TBD.	Check Main Power Supply & Wiring
External Base Load Setpoint	IFW-AR	Chiller	All	a. Not "Enabled": no diagnostics. b. "Enabled": Out-Of-Range Low or Hi, set diagnostic, Terminate external base loading function. This IFW diagnostic will automatically reset if the input returns to the normal range.	Check Signal At Input
External Chilled Water Setpoint	IFW-AR	Options	All	a. Not "Enabled": no diagnostics. b. "Enabled": Out-Of-Range Low or Hi, set diagnostic, default CWS to next level of priority (e.g. Front Panel SetPoint). This IFW diagnostic will automatically reset if the input returns to the normal range.	Check Signal At Input
External Current Limit Setpoint	IFW-AR	Options	All	a. Not "Enabled": no diagnostics. b. "Enabled": Out-Of-Range Low or Hi, set diagnostic, default CLS to next level of priority (e.g. Front Panel SetPoint. This IFW diagnostic will automatically reset if the input returns to the normal range.	Check Signal At Input
External Hot Water Setpoint	IFW-AR	Options	All	a. Not "Enabled": no diagnostics. b. "Enabled": Out-Of-Range Low or Hi, set diagnostic, default HWS to next level of priority (e.g. Front Panel SetPoint). This IFW diagnostic will automatically reset if the input returns to the normal range.	Check Signal At Input
External Vane Position Setpoint	MMR	Chiller	All	a. Not "Enabled": no diagnostics. b. "Enabled": Out-Of-Range Low or Hi, set diagnostic.	Check Signal at Input

DIAGNOSTIC DESCRIPTION	Diag Type	Module that Called Diag.	Diag. Active Modes	CAUSE	Help Message
Free Cooling Valves	MMR	Options	When exiting Free cooling	a. The Free Cooling Valves were commanded to close and did not close in the three minutes allowed for closure. And FC is installed (at the CLD) and commanded off. b. The Free Cooling Valves were commanded to open and did not open in the three minutes allowed for closure. And FC is installed (at the CLD) and commanded On.	Check Clsd End-Switches, Valves, Wiring
Heat Sink Temp Sensor	IFW	Starter	All	Open or Short and Solid State Starter installed. Note: The Solid State Starter is expected to be protected from overheating via a thermal cutout. Since this sensor is not used to protect the starter, the failure of the sensor is treated as an IFW.	Check Sensor Wiring And Connections
HGBP Valve Closure Overdue	IFW			a. The HGBP Valve was commanded to close and did not close in the three minutes allowed for closure	Check Clsd End-Switches, Valves, Wiring
High Bearing #1 Temp	MMR	Stepper	All starting and running modes	a. The bearing temperature at sensor #1 exceeded 180 + or - 5 °F (82.2 °C) for 0.5 - 2 seconds (Note: BT, WT, and DT may be "instantaneous trip" but consistent with the analog input filtering function.), and b. This function is enabled at the CLD.	Check Oil System
High Bearing #2 Temp	MMR	Stepper	All starting and running modes	a. The bearing temperature at sensor #2 exceeded 180 + or - 5 °F (82.2 °C) for 0.5 - 2 seconds (Note: BT, WT, and DT may be "instantaneous trip" but consistent with the analog input filtering function.), and b. This function is enabled at the Human Interface.	Check Oil System
High Cprsr Discharge Temp.	MAR	Stepper	All	a. The discharge temp. exceeded the trip value; 200°F + or - 5°F for CVHE/F, CVG and CVA. The Discharge Temp Cutout is adjustable at the Human Interface. See also section P4_CPRSR.Doc of this Functional Specification. b. Time to trip from trip value exceeded shall be 0.5 to 2.0 seconds. (Note: BT, WT, and DT may be "instantaneous trip" but consistent with the analog input filtering function.) d. The diag. shall reset automatically 50 °F below the trip point.	See Troubleshooting Service Bulletin
High Motor Temp Position #1	MMR	Circuit	Any Start and Run Mode	The Motor winding temp. at sensor #1 exceeded 265 °F + or - 15°F for 0.5 - 2 seconds. (Note: BT, WT, and DT may be "instantaneous trip" but consistent with the analog input filtering function.)	See Troubleshooting Service Bulletin
High Motor Temp Position #2	MMR	Circuit	Any Start and Run Mode	The Motor Winding Temp. at sensor #2 exceeded 265 °F + or - 15 °F for 0.5 - 2 seconds. (Note: BT, WT, and DT may be "instantaneous trip" but consistent with the analog input filtering function.)	See Troubleshooting Service Bulletin
High Motor Temp Position #3	MMR	Circuit	Any Start and Run Mode	The Motor Winding Temp. at sensor #3 exceeded 265° F + or - 15° F for 0.5 - 2 seconds. (Note: BT, WT, and DT may be "instantaneous trip" but consistent with the analog input filtering function.)	See Troubleshooting Service Bulletin

DIAGNOSTIC DESCRIPTION	Diag Type	Module that Called Diag.	Diag. Active Modes	CAUSE	Help Message
High Oil Temp	MMR	Circuit	All starting and running Modes	UCP2 shall provide a fixed High Oil Temperature Cutout of 180 °F (82.2°C). If the oil temperature violates the cutout by 120 degree F seconds (66.6 degree C seconds) an MMR diagnostic shall be generated.	Check Oil System
High Pressure Cutout Tripped	MMR	Circuit	All	A high pressure cutout was detected. See the trip points for the various products under the HPC switch description of this specification.	Check Condenser Water Temp.
High Restart Inhibit Timer Warning	IFW	Starter	All	The Restart Inhibit timer has reached a maximum threshold for the host chiller. For CTV chillers this is 45 minutes. This indicates excessive chiller cycling, steps should be taken to correct this.	Check for Excessive Chiller Cycling
High Vacuum Lockout	MMR	Circuit	Pre-Start	The Oil Tank Pressure transducer shall be used to sense for very low pressures in all Non-running cprsr modes.	See Troubleshooting Service Bulletin
IGV BPI Not Found During Search	IFW	Stepper	All	The Inlet Guide Vane Actuator Binary Position Indicator was not found over the entire stroke of the IGV during the BPI search.	See Troubleshooting Service Bulletin
IGV BPI Found Low During Search	IFW	Stepper	All	The Inlet Guide Vane Actuator Binary Position Indicator was found too low in the stroke of the IGV during the BPI search.	Check Stepper Module, Wiring, & Motor
IGV BPI Shorted	IFW	Stepper	Pre-Start	At what is believed to be a closed position, the IGV BPI was found to be shorted.	Check Sensor, Wiring, and Connections
IGV Electrical Drive Circuit Open	MMR	Stepper	On Demand and Pre-Start	Run the IGV Actuator electrical drive circuit test both on demand from the human interface and just before the chiller starts.	See Troubleshooting Service Bulletin
Incorrect Chiller Software Installed	MMR	Chiller	All	The incorrect Eprom was loaded into this module. This diagnostic is detected when a factory test computer sets the unit type to something other than what the Eprom software was intended for.	(No message is required.)
Incorrect Stepper Software Installed	MMR	Stepper	All	The incorrect Eprom was loaded into this module. This diagnostic is detected when a factory test computer sets the unit type to something other than what the Eprom software was intended for.	(No message is required.)
Inlet Guide Vane Closure Ovordue	IFW	I/O	All Non-running modes, Starting, Pre-Stop (IGV manual modes)	a. The inlet guide vanes were commanded to close and did not close in the three minutes allowed for closure.	Check Clsd End-Switches, Vanes, Wiring
I/O Mod: Loss of Comm with Chiller	IFW	I/O	All	The I/O module lost communications with the Chiller module for 15 contiguous seconds.	Check IPC Wiring/ Connections
Invalid Starter Selection	MMR	Starter	All Modes	The Cld has been setup for an AFD starter type, however the starter module is not AFD compatible. **(Note: This feature is not supported by hardware.) (Special Note not for Publishing; See Starter Module Design Specification for requirements to enable AFD operation.)**	Call Local Trane Service Agency

DIAGNOSTIC DESCRIPTION	Diag Type	Module that Called Diag.	Diag. Active Modes	CAUSE	Help Message
Low Chilled Water Temp: Unit Off (Unit in Auto but not Starting or Running)	IFW-AR	Chiller	Unit in Auto and No Ckt's Energized (Any Ckt(s) Energized)	a. The chilled water temp. fell below the cutout setpoint while the compressor (or Solution Pump) was not running for 30 degree F Seconds. Automatic Reset of the IFW dig shall occur 2 degrees F (1.1 °C) above the cutout setpoint.	Check Flow, Sensor, & Wiring
Low Chilled Water Temp: Unit On (Unit Starting or Running)	MAR	Chiller	Any Ckt(s) Energized (No Ckt's Energized)	a. The chilled water temp. fell below the cutout setpoint while the compressor (or Solution Pump) was running for 30 degree F Seconds. Automatic Reset of the MAR diag shall occur 2 degrees F (1.1 °C) above the cutout setpoint.	Check Flow, Sensor, & Wiring
Low Differential Oil Pressure	MMR	Circuit	All starting and running Modes	**Pre-Lube Mode on CVHE/F Chillers:** a. See Diagnostic 1FF. **Start & Run Mode on CVHE/F Chillers:** a. If during these modes the Differential oil pressure drops below 9 PSID for more than 90 Psid Seconds, an MMR diagnostic shall be generated. The 90 Psid Seconds integral shall be reset to zero when the differential pressure rises above 9 psid. **Pre-Lube Mode on CVGD/CVAD Chillers:** a. See Diagnostic 1FF. **Start & Run Mode on CVGD/CVAD Chillers:** a. While Starting and Running, if the differential oil pressure switch opens for more than 3-5 seconds, generate an MMR diagnostic.	Check Oil System
Low Evap Rfgt Temp.	MMR	Stepper	Starter Contactor Energized or in Free Cooling	a. The Saturated Evap Rfgt Temp dropped below the Low Rfgt Temp. Cutout Setpoint when the circuit was running for 30 °F seconds.	Check Operation, Call Service
Low Evap.Water Flow (To be implemented in CTV Phase C release and ABS Phase B release.)	IFW-AR	Chiller	Chiller Auto and All Running Modes	a. The evap. water flow measurement option was installed and the flow dropped to a setpoint set at the CLD. This IFW shall be Auto Reset and reset 0.1 gpm/ton above the adjustable trip point or when the Evaporator pump is turned off. b. There shall be a 2 minute delay in permitting this diagnostic to be called out from the time the evap pump has been turned on AND flow has been established/confirmed via the flow switch input. c. This is not necessarily active in a Manual On of the Evaporator pump. That is, if the chiller is in the Stop mode and the Evap. Relay is manually turned on, this diagnostic shall not be active. (Manual On is not taken into account.)	See Troubleshooting Service Bulletin
Low Oil Temp	MAR	Circuit	All Non-running Modes.	The oil temperature dropped below it's adjustable Low Oil Temp. Cutout. ("Instantaneous trip" but consistent with the analog input filtering function.) See Section P4_CPRSR for further description of this diagnostic. Automatic Reset of the MAR diag shall occur 5 degrees F (2.8 °C) above the cutout setpoint.	See Troubleshooting Service Bulletin

DIAGNOSTIC DESCRIPTION	Diag Type	Module that Called Diag.	Diag. Active Modes	CAUSE	Help Message
Max Acceleration Setpts Error	IFW	Starter	All	a. The redundant Maximum Acceleration settings did not agree for 30 contiguous seconds. (Continue to use the previous value for the 30 second timeout.) When this diagnostic occurs the affected Starter Module shall use 6 seconds as a default until either the UCM is reset or, if the redundant settings agree again, the starter module can go back to using the actual setting.	Review Max Acceleration Set Up
Max Pumpout Rate Exceeded-Svc (Prg)	IFW	Purge	All	a. IFW to the chiller, MAR to the Purge.	Purge Inop: See Purge O & M Manual
Max Pumpout Rate Exceeded (Prg)	IFW	Purge	All	a. IFW to the chiller, MAR to the Purge.	Purge Inop: See Purge O & M Manual
Memory Error Type I: NOVRAM	MMR	Chiller	On UCM Power Up or following a Type II Memory error diag.	a. On UCM either power up or following a Type II Memory Error a NOVRAM memory error was detected. The UCM is operating on all Engineering Factory defaults for all setup parameters. Check all setup parameters and continue to run chiller. Replace the Chiller Module as soon as a replacement is available. Note: It is expected that this diagnostic will be detected on the very first power up of the Chiller Module at the Manufacturer since the NOVRAM will not contain valid data on first power up.	Call Service to Check all Settings
Memory Error Type IV	IFW	Chiller	All	A page timeout error was detected while trying to write data into EEPROM. There will likely be a recall of Engineering Factory defaults on the next reset or power transition. Replace the Chiller Module as soon as a replacement is available.	Call Service to Check all Settings
Memory Error Type II: Shadow RAM	IFW	Chiller	All	a. A Shadow RAM memory error was detected. The UCM is operating on all last valid values (pulled from NOVRAM) for all setup parameters. No setup parameter changes were pending to be loaded into NOVRAM, a complete recovery of all setup parameters was made and there is no need to check unit setup parameters. Compressor starts and hour were lost for not more than the last 24 hours. This is expected to be an isolated event and repair or replacement is not required. If this diagnostic does occur repeatedly, then replace the Chiller module.	No Settings Were Lost
Memory Error Type III	IFW	Chiller	All	a. A Shadow Ram memory error was detected. The UCM is operating on all last valid values (pulled from NOVRAM) for all setup parameters. Setup parameter changes less than 24 hours old pending to be loaded into NOVRAM were lost. Check all setup parameters made in the last 24 hours. Compressor starts and hours were lost for not more than the last 24 hours. This is expected to be an isolated event and repair or replacement is not required. If this diagnostic does occur repeatedly, then replace the Chiller module.	Settings Changed in The Last 24 Hours Lost

DIAGNOSTIC DESCRIPTION	Diag Type	Module that Called Diag.	Diag. Active Modes	CAUSE	Help Message
Momentary Power Loss	MAR	Starter	All Running Modes (Start Mode, e.g. Before Transition		Determine Cause Of Power Interruption
Motor Temp Sensor #1	MMR	Circuit	All	Open or Short	Check Sensor, Wiring And Connections
Motor Temp Sensor #2	MMR	Circuit	All	Open or Short	Check Sensor, Wiring And Connections
Motor Temp Sensor #3	MMR	Circuit	All	Open or Short	Check Sensor, Wiring And Connections
MPL Detect Circuit Inoperative	MMR	Starter	All	A failure was detected in the Momentary Power Loss detect circuit. If there are no zero cross interrupts on Vab for 637.5 msec (Prior to Centravac Upgrade 4: approx. 3 half line cycles), the timer interrupt will trip and generate a diagnostic that indicates that our ability to detect MPL is gone. If Vab was truly gone the module would be powered down so if we can detect that Vab is gone then there must be a hardware failure on the board.	See Troubleshooting Service Bulletin
Oil Pressure Sensor Calibration	MMR	Circuit	All Non-running Modes and not for 5 minutes after running.	The recalibration of the Differential Oil Pressure sensors resulted in an error correction of greater than 3 PSID.	See Troubleshooting Service Bulletin
Oil Pump Discharge Pressure Sensor	MMR	Circuit	All	Open or shorted input. Must Hold on open AND short input is 2.0 Psia. Design: Both opens and shorts result in the pressure going to the low end of the scale. Therefore a Must Hold on the high pressure end is not required.	Check Sensor, Wiring, and Connections
Oil Sump Pressure Sensor	MMR	Circuit	All	Open or shorted input. Must Hold on open AND short input is 2.0 Psia. Design: Both opens and shorts result in the pressure going to the low end of the scale. Therefore a Must Hold on the high pressure end is not required.	Check Sensor, Wiring, and Connections
Oil Temp Sensor	MMR	Circuit	All	Open or Short	Check Sensor, Wiring And Connections
Options: Loss of Comm with Starter	IFW	Options	All	The options module lost communications with the Starter module for 15 contiguous seconds.	Check IPC Wiring/ Connections
Options: Loss of Comm with Chiller	IFW	Options	All	The options module lost communications with the Chiller module for 15 contiguous seconds.	Check IPC Wiring/ Connections

DIAGNOSTIC DESCRIPTION	Diag Type	Module that Called Diag.	Diag. Active Modes	CAUSE	Help Message
Options Module 24 Vdc Ref Missing	IFW	Options	All	24Vdc reference missing and the differential water pressure transducers are installed.	Check Press Xducer Wiring/ 24 Vdc Supply.
Options Module 24 Vdc Ref Missing	MMR	Options	All	24Vdc reference missing and the differential water pressure transducers are installed and **Adaptive Frequency Drive** installed.	Check Press Xducer Wiring/ 24 Vdc Supply.
Options Mod Off-Brd 5V Range	IFW	Options	All	An improper Off Board 5v voltage was detected at the Options Module. A 5vdc is used for off-board devices such as the External CWS and CLS, and pressure transducers. The micro checks to see that the A/D value falls within an acceptable range.	Check Options Module Voltages
Options Mod Ref Voltage Calibration	IFW	Options	All	An improper reference voltage was detected at the Options Module. A 2.5 vdc reference is used to calibrate the non-ratiometric analog I/O such as 2-10vdc and 4-20ma inputs as well as PWM Analog outputs. The micro checks to see that the A/D value falls within an acceptable range.	See Troubleshooting Service Bulletin
Outdoor Air Temp Sensor See Also 3d3 diag. (Either Outdoor Air Reset or Low Ambient Lockout Selected)	IFW	Chiller	All	Open or Short a. Use end of range value (whatever value the open or short gives). b. Clear diag. when the resistance returns to normal range.	Check Sensor, Wiring And Connections
Outdoor Air Temp Sensor See Also 3d3 diag. (Both Outdoor Air Rst and Low Ambient Lockout not selected.)	None	None	All	Open or Short a. Display end of range value. (dashes "-----")	N/A
Outdoor Air Temp Sensor See also A1 and A2 diag.	MMR	Chiller	All	Open or Short	Check Sensor, Wiring And Connections
Over Voltage	MAR	Starter	Pre-Start and Any Ckt(s) Energzd	a. Line voltage above + 10% of nominal. (Must hold = + 10% of nominal. Must trip = + 15% of nominal. Reset differential = min. of 2% and max. of 4%. Time to trip = minimum of 1 min. 10 sec. and maximum of 5 min. 20 seconds)	Check Main Power Supply & Wiring
Phase Loss	MMR	Starter	Contactor Energizd or all Start, and Run modes.	a. No current was sensed on one or more of the current xformer inputs. (Must hold = 20% RLA. Must trip = 5% RLA.) Time to trip shall be 1 second minimum, 3 seconds maximum. Actual design trip point is 10%. b. Phase rotation protection is enabled and either the Phase A current signal or the Phase C current is less than approximately 5% of the CT rating. Time to trip is 0.7 seconds for CTV/ABS.	Check Main Power Supply & Wiring
Phase Reversal	MMR	Starter	Contactor energized to transition command	a. A phase reversal was detected on the incoming current. On a compressor startup the phase reversal logic must detect and trip in 0.7 seconds.	Check Main Power Supply & Wiring
Phase Reversal Protection Lost	MMR	Starter	Starter Contactor energized to transition command	a. The phase reversal protection on the compressor has become inoperative. The phase rotation protection system failed to detect 2 in a row of one of the four phase circuit states; Phase reversal, Phase rotation OK, Phase A lost, Phase B lost.	Check Starter Module.

DIAGNOSTIC DESCRIPTION	Diag Type	Module that Called Diag.	Diag. Active Modes	CAUSE	Help Message
Purge Cprsr Suction Temp Sensor	IFW	Purge	All	Open or Shorted Sensor a. IFW to the chiller, MMR to the Purge.	Purge Inop: See Purge O & M Manual
Purge Liquid Level Too High	IFW	Purge	All	a. The Level Switch at the purge opened for 6 to 10 Seconds. Note: This was implemented as tripping in 2 A/D samples, which are 0.4 seconds apart. Prior to 2/2/95 only 1 A/D sample could trigger this diagnostic. b. IFW to the chiller, MMR to the Purge.	Purge Inop: See Purge O & M Manual
Purge: Loss of Comm with Chiller	IFW	Purge	All	The purge module lost communications with the chiller module for 15 contiguous seconds. a. IFW to the chiller, MAR to the Purge.	Check IPC Wiring/ Connections
Purge: Loss of Comm with Starter	IFW	Purge	All	The purge module lost communications with the starter module for 15 contiguous seconds. a. IFW to the chiller, MAR to the Purge.	Check IPC Wiring/ Connections
Purge: Loss of Comm with Stepper	IFW	Purge	All	The purge module lost communications with the stepper module for 15 contiguous seconds. a. IFW to the chiller, MAR to the Purge.	Check IPC Wiring/ Connections
Purge: Loss of Comm with Options	IFW	Purge	All	The purge module lost communications with the chiller module for 15 contiguous seconds. a. IFW to the chiller, IFW to the Purge.	Check IPC Wiring/ Connections
Purge: Loss of Comm w/ Retrofit CLD	IFW	Purge	All	The purge module lost communications with the retrofit Human Interface module for 15 contiguous seconds.	Check IPC Wiring/ Connections
Purge: Loss of Comm with Stepper #1	IFW	Purge	All	The purge module lost communications with the chiller module for 15 contiguous seconds. a. IFW to the chiller, MAR to the Purge.	Check IPC Wiring/ Connections
Purge: Loss of Comm with Stepper #2	IFW	Purge	All	The purge module lost communications with the chiller module for 15 contiguous seconds. a. IFW to the chiller, MAR to the Purge.	Check IPC Wiring/ Connections
Purge Memory Error Type I: NOVRAM This diag. should be seen in both UCP2 and retrofit applications only.	MMR	Purge	On Purge Power Up or following a Type II Memory error diag.	a. On either Purge Module power up or following a Type II Memory Error, a NOVRAM memory error was detected. The Purge Module is operating on all Engineering Factory defaults for all setup parameters. Check all setup parameters and continue to run purge. Replace the Purge Module as soon as a replacement is available. Note: It is expected that this diagnostic will be detected on the very first power up of the Purge Module at the Manufacturer since the NOVRAM will not contain valid data on first power up.	Purge Inop: See Purge O & M Manual
Purge Memory Error Type II: Shadow RAM This diag. should be seen in retrofit applications only.	IFW	Purge	All	a. A Shadow RAM memory error was detected. The Purge Module is operating on all last valid values (pulled from NOVRAM) for all setup parameters. No setup parameter changes were pending to be loaded into NOVRAM, a complete recovery of all setup parameters was made and there is no need to check unit setup parameters. Purge pumpout times Compressor starts and hour were lost for not more than the last 24 hours. This is expected to be an isolated event and repair or replacement is not required. If this diagnostic does occur repeatedly, then replace the Purge module.	No Setting Were Lost

DIAGNOSTIC DESCRIPTION	Diag Type	Module that Called Diag.	Diag. Active Modes	CAUSE	Help Message
Purge Memory Error Type III This diag. should be seen in retrofit applications only.	IFW	Purge	All	a. A Shadow Ram memory error was detected. The Purge Module is operating on all last valid values (pulled from NOVRAM) for all setup parameters. Setup parameter changes less than 24 hours old pending to be loaded into NOVRAM were lost. Check all setup parameters made in the last 24 hours. Purge pumpout times Compressor starts and hours were lost for not more than the last 24 hours. This is expected to be an isolated event and repair or replacement is not required. If this diagnostic does occur repeatedly, then replace the Purge module.	Settings Changed in The Last 24 Hours Lost
Purge Memory Error Type IV	IFW	Purge	All	A page timeout error was detected while trying to write data into EEP Factory. There will likely be a recall of Engineering Factory defaults or a corruption of pumpout data on the next power transition. Replace the Purge Module as soon as a replacement is available.	See Purge O & M Manual
Purge Memory Error III This diag will be seen in UCP2 applications of the Purge Module. This diag will not be seen in retrofit applications of the Purge Module. See also diag 385-387.	IFW	Purge	All	a. A Shadow Ram memory error was detected. Compressor starts and hours were lost for not more than the last 24 hours. This is expected to be an isolated event and repair or replacement is not required. If this diagnostic does occur repeatedly, then replace the Purge module. This is an IFW diagnostic to both the Purge and Chiller.	No Settings Lost
Purge Misconfigured as Retrofit	IFW	Purge	All	The Purge module is configured as a Retrofit application instead of an UCP2 application. Chiller module remaps Purge Retrofit Only diagnostics to this diagnostic. Check Purge input J1 pins 5,6. Open = UCP2 application, Short = Retrofit application	See Purge O & M Manual
Purge Misconfigured as UCP2	IFW	Purge	All	The Purge module is configured as an UCP2 application instead of a Retrofit application. Check Purge input J1 pins 5,6. Open = UCP2 application, Short = Retrofit application	See Purge O & M Manual
Refrigerant Monitor Sensor	IFW-AR	Circuit	All	Open or Shorted input and the Rfgt Monitor is setup as installed at the Clear Language Display.	Check Sensor, Wiring, and Connections
Rfgt Monitor Memory Lost	IFW	Rfgt Mon	All	Refrigerant Monitor lost battery backed-up RAM. a. IFW to the chiller, MMR/MAR to the Refrigerant Monitor.	See Refrigerant Monitor IOM Manual
Rfgt Monitor IR Source	IFW	Rfgt Mon	All	Refrigerant Monitor infrared optical source failure. a. IFW to the chiller, MAR to the Refrigerant Monitor.	Check IR Source Wiring And Connections
Rfgt Monitor Chopper	IFW	Rfgt Mon	All	Refrigerant Monitor optical bench photo-interrupter failure. a. IFW to the chiller, MAR to the Refrigerant Monitor.	Check Chopper Wiring And Connections
Rfgt Monitor Temp Sensor	IFW	Rfgt Mon	All	Refrigerant Monitor bench temperature sensor failure. a. IFW to the chiller, MAR to the Refrigerant Monitor.	Check Sensor, Wiring, Connections
Rfgt Monitor Bench Flow Loss	IFW	Rfgt Mon	All	Air flow loss to the Refrigerant Monitor optical bench. a. IFW to the chiller, MMR/MAR to the Refrigerant Monitor.	See Refrigerant Monitor IOM Manual

DIAGNOSTIC DESCRIPTION	Diag Type	Module that Called Diag.	Diag. Active Modes	CAUSE	Help Message
Rfgt Monitor Scanner Flow Loss	IFW	Rfgt Mon	All	Air flow loss to the Refrigerant Monitor scanner. a. IFW to the chiller, MMR/MAR to the Refrigerant Monitor.	See Refrigerant Monitor IOM Manual
Rfgt Monitor Out Of Temp Range	IFW	Rfgt Mon	All	Out of temperature range for measuring refrigerant concentration.	Check Bench Heater, Wiring, Connections
Rfgt Monitor Refrig Level Too Low	IFW	Rfgt Mon	All	The Refrigerant Monitor read less than or equal to -5 ppm refrigerant concentration.	Recalibrate Refrigerant Monitor
Rfgt Monitor Fault	IFW	Rfgt Mon	All	A undefined diagnostic detected by the Refrigerant Monitor. a. IFW to the chiller, MMR to the Refrigerant Monitor.	See Refrigerant Monitor IOM Manual.
Rfgt Monitor Calibration Error (This diagnostic is currently ignored by UCP2)	IFW	Rfgt Mon	All	The Refrigerant Monitor calibration failed. a. IFW to the chiller, IFWMMR to the Refrigerant Monitor.	See Refrigerant Monitor IOM Manual
Rfgt Monitor Aux Input Error	IFW	Rfgt Mon	All	The Refrigerant Monitor auxiliary input is outside the 4-20 mA range.	Check Signal At Input
Rfgt Monitor External Reset	IFW	Rfgt Mon	All	The Refrigerant Monitor external reset switch (Normally Closed) is stuck in the "reset" state or the switch/jumper is missing.	See Refrigerant Monitor IOM Manual.
Rfgt Monitor Level 3 Rfgt Refrigerant Alarm	IFW	Rfgt Mon	All	The Refrigerant Monitor has read a refrigerant concentration greater or equal to the level 3 setpoint.	N/A
Rfgt Monitor Auxiliary Alarm	IFW	Rfgt Mon	All	The Refrigerant Monitor auxiliary input signal indicates an alarm condition.	N/A
Rfgt Monitor Level 2 Rfgt Refrigerant Alarm	IFW	Rfgt Mon	All	The Refrigerant Monitor has read a refrigerant concentration greater or equal to the level 2 setpoint.	N/A
Rfgt Monitor Level 1 Rfgt Refrigerant Alarm	IFW	Rfgt Mon	All	The Refrigerant Monitor has read a refrigerant concentration greater or equal to the level 1 setpoint.	N/A
Safety String Input Opened* **	MMR	Scorpio	All	Safety string input opened on the Scorpio module	N/A
Severe Phase Unbalance	MMR	Starter	All Running Modes	a. A 30% Phase Unbalance diagnostic has been detected. Items to check are the Current Transformer Part Numbers (they should all match), The Current Transformer resistances, line voltage phase balance, all power wiring connections, the contactor pole faces, and the motor. If all these are OK, replace the Starter module.	Check Main Power Supply & Wiring
Solid State Starter Fault Rly Open	MMR	Starter	All Start and Run Mode	The SSS fault relay is open.	See Solid State Starter Service Bulletin, check for an open wire.
Soln Pump Winding Thermostat Open	MMR	Circuit	All	a. The motor winding temperature thermostat opened; nominally 230°F (110 °C). b. The motor temp. thermostat or wiring is open. c. Time to trip from input open to Solution Pump shutdown shall be 0.5 to 2.0 seconds.	Check Machine Operation

DIAGNOSTIC DESCRIPTION	Diag Type	Module that Called Diag.	Diag. Active Modes	CAUSE	Help Message
Starter Contactor Interrupt Failure	MMR	Starter	Starter Contact not Energized (Starter Contact Energized)	a. Welded Starter contactor. b. Detected a welded compressor contactor when the compressor was commanded off but the current did not go to zero. Detection time shall be 5 second minimum and 10 seconds maximum for all Electromechanical and Solid State Starters. Detection time for Adaptive Frequency. Drives shall be 12 seconds minimum and 20 seconds maximum. On detection, generate the diagnostic, energize the appropriate alarm relay, continue to command the affected compressor off.	Complete Starter Checkout Required
Starter did not Transition	MMR	Starter	On the first check after transition.	a. The UCM did not receive a transition complete signal in the designated time from the UCM command to transition. The must hold time from the UCM transition command is 1 second. The Must trip time from the transition command is 6 seconds. Actual design is 2.5 seconds. b. Item a. above is active only for Y-Delta, Auto-Transformer, and Primary Reactor, and X-Line Starters.	Complete Starter Checkout Required
Starter Dry Run Test	MMR	Starter	Starter Dry Run Mode	While in the Starter Dry Run Mode either 50% Line Voltage was sensed at the Potential Transformers or 10% RLA Current was sensed at the Current Transformers.	Current or Voltage Detected
Starter Fault Type I	MMR	Starter	Starting	a. This is a specific starter test where 1M(2k1) is closed first and a check is made to ensure that there are no currents detected by the CT's. If currents are detected when only 1M is closed first at start, then one of the other contactors is shorted. b. This test applies only to factory installed Y-Delta Closed Transition Starters.	See Troubleshooting Service Bulletin
Starter Fault Type II	MMR	Starter	Starting	a. This is a specific starter test where the Shorting Contactor (S)(2K3) is individually energized and a check is made to ensure that there are no currents detected by the CTs. If current is detected when only S is energized at Start, then 1M is shorted. b. This test in a. above applies to all forms of starters (Note: It is understood that many starters do not connect to the Shorting Contactor.).	See Troubleshooting Service Bulletin
Starter Fault Type III	MMR	Starter	Starting	a. As part of the normal start sequence to apply power to the compressor the Shorting Contactor (S) and then the Main Contactor (1M) were energized. 1.6 seconds later there were no currents detected by the CT's for the last 1.2 Seconds on all three phases. b. This test in a. above applies to all forms of starters except Adaptive Frequency. Drives (Note: It is understood that many starters do not connect to the Shorting Contactor.). c. For Adaptive Frequency Drives, TBD	See Troubleshooting Service Bulletin
Starter: Loss of Comm with Circuit	MMR	Starter	All	The starter module lost communications with the Circuit module for 15 contiguous seconds.	Check IPC Wiring/ Connections

DIAGNOSTIC DESCRIPTION	Diag Type	Module that Called Diag.	Diag. Active Modes	CAUSE	Help Message
Starter: Loss of Comm with Chiller	MMR	Starter	All	The starter module lost communications with the Chiller module for 15 contiguous seconds.	Check IPC Wiring/ Connections
Starter Mod Ref Voltage Calibration	IFW	Starter	All	An improper reference voltage was detected at the Starter Module. A 2.5 vdc reference is used to calibrate the non-ratiometric analog I/O such as 2-10vdc and 4-20ma inputs as well as PWM Analog outputs. The micro checks to see that the A/D value falls within an acceptable range.	See Troubleshooting Service Bulletin
Stepper #1:Loss of Comm with Starter	MMR	Stepper	All	The Stepper #1 module lost communications with the Starter module for 15 contiguous seconds.	Check IPC Wiring/ Connections
Stepper #1:Loss of Comm with Chiller	MMR	Stepper	All	The Stepper #1 module lost communications with the Chiller module for 15 contiguous seconds.	Check IPC Wiring/ Connections
Surge Shutdown: Ice Building	MAR	Starter	All Ice Building Modes	An extended Surge condition was detected while in Ice Building Mode. This diagnostic shall clear when the Ice Building command is withdrawn.	See Troubleshooting Service Bulletin
TCI: Loss of Comm with Purge	IFW	TCI	All	The TCI module lost communications with the Purge module for 15 contiguous seconds.	Check IPC Wiring/ Connections
TCI: Loss of Comm with Starter	IFW	TCI	All	The TCI module lost communications with the Starter module for 15 contiguous seconds.	Check IPC Wiring/ Connections
TCI: Loss of Comm with Options	IFW	TCI	All	The TCI module lost communications with the Options module for 15 contiguous seconds.	Check IPC Wiring/ Connections
TCI: Loss of Comm with Circuit	IFW	TCI	All	The TCI module lost communications with the Circuit module for 15 contiguous seconds.	Check IPC Wiring/ Connections
TCI: Loss of Comm with Chiller	IFW	TCI	All	The TCI module lost communications with the Chiller module for 15 contiguous seconds.	Check IPC Wiring/ Connections
TCI: Loss of Comm with Stepper #1	IFW	TCI	All	The TCI module lost communications with the Stepper #1 module for 15 contiguous seconds.	Check IPC Wiring/ Connections
Tracer Communications Lost	IFW	TCI	All	The Tracer was setup as "installed" at the CLD and the TCI lost communications with the Tracer for 15 contiguous minutes after it had been established. Continue to run the chiller with the last valid Tracer Setpoints/Mode.	Check Tracer to UCP Wiring/ Connections
Tracer failed to Establish Comm	IFW	TCI	At power-up	The Tracer was setup as "installed" at the CLD and the Tracer did not communicate with the TCI within 2 minutes after power-up.	Check Tracer Wiring/ Connections/ Power
Tracer Outdoor Air Temp Sensor Fail	IFW	Chiller	All		Check Sensor, Wiring, and Connections
Tracer Temperature Sensor	IFW	Options	All	Input Shorted.	Check Sensor, Wiring, and Connections
Transition Complete Input Shorted	MMR	Starter	Pre-Start	a. The Transition Complete input was found to be shorted before the compressor was started. b. This is active for all electromechanical starters.	Check transition complete contact

DIAGNOSTIC DESCRIPTION	Diag Type	Module that Called Diag.	Diag. Active Modes	CAUSE	Help Message
Transition Complete Input Opened	MMR	Starter	All Running Modes	a. The Transition Complete input was found to be opened with the compressor motor running after a successful completion of transition. b. This is active only for Y-Delta, Auto-Transformer, and Primary Reactor Starters.	Complete Starter Checkout Required
Under Voltage	MAR	Starter	Pre-Start and Any Ckt(s) Energzd	a. Line voltage below - 10% of nominal or the Under/Overvoltage transformer is not connected. (Must hold = - 10% of nominal. Must trip = - 15% of nominal. Reset differential = min. of 2% and max. of 4%. Time to trip = min. of 1 min. and max. of 5 min.)	Check Main Power Supply & Wiring

NOTE: For FastPak, the "module that called the diagnostic" is Scorpio if Circuit or Stepper is listed

*** **FastPak-only Diagnostic**

Operator Settings Group:

	Menu item	Choices	Default	Design/Actual
1	Purge Operating Mode	Stop, On, Auto, Adaptive	Auto	
2	Front Panel Chilled Wtr Setpt	0-65 Deg F, -17.8-18.3 Deg C	44.0 °F, 6.7 C	
3	Front Panel Current Limit Setpt	40 to 100%	100%	
4	Chilled Water Reset Type	Return, Constant Return, Disable	Disable	
5	Reset Ratio	10 to 120%	50%	
6	Start Reset Setpoint	4 to 30 °F, 2.2 to 16.7 °C	10 °F, 5.6 °C	
7	Max Reset Setpoint	0 to 20 °F, 0.0 to 11.1 °C	5 °F, 2.8 °C	
8	Ice Building	Disable, Enable	Disable	
9	Panel Ice Termination Setpoint (Displayed if Ice Building Enabled)	20 to 32 °F, -6.7 to 0 °C	27 °F, -2.8 °C	
10	Ice to Normal Cooling Timer (Displayed only if Ice Building Option" is installed)	0 to 10 mm.	5 minutes	
11	Chilled Water Setpoint Source	Front Panel, External SourceFuture 1, Future 2	Front Panel	
12	Current Limit Setpoint Source	Front Panel, External Source, Future 1, Future 2	Front Panel	
13	Ice Termination Setpoint Source (Displayed only if "Ice Building Option" is installed)	Front Panel, Future 1, Future 2, Future 3	Front Panel	
14	Setpoint Source Override	None, Use Front Panel Setpoints, Override Tracer-Use Default Setpoints (available only if Tracer Option is installed)	None	

Service Settings Group: Basic Setups

	Menu Item	Choices	Default	Design/Actual
1	Language	English, Francais, Deutch, Espanol, Nippon, Italiano, Nederland, Portuguese, Coded	English	
2	Display Units	English, SI XXX.X, XXX	English	
3	Decimal Places Displayed		XXX.X	
4	Display Menu Headings	Enable, Disable	Enable	
5	Differential To Start Setpoint	1 to 10 °F, 0.5 to 5.5 °C	5 °F, 2.8 °C	
6	Differential To Stop Setpoint	1 to 10 °F, 0.5 to 55 °C	5 °F, 2.8 °C	
7	Evap Pump Off Delay	0 to 30 Minutes	1 Minute	
8	Printer Setups			
	Print Time Interval	Enable, Disable	Enable	
	Print on Time Interval	1 to 24 hrs.	8 hrs.	
	Print on Diagnostic	Enable, Disable	Enable	
	Number of Pre-Diag Reports	1 to 5	5	
	Diagnostic Report Interval	2 to 120 seconds	S seconds	
	Printer, Baud Rate	300, 4800, 1200, 9600, 2400, 19,200	9600	
	Printer, Parity	None, Odd, Even	None	
	Printer, Data Bits	8,7	8	
	Printer, Stop Bits	1,2		
	Printer, Handshaking	XON/XOFF, DTR, RTS, None	XON/XOFF	

Field Startup Group:

	Menu Item	Choices	Default	Design/Actual
1	Keypad/Display Lock Feature Enable	Disable, Enable	Disable	
2	Menu Settings Password Enable	Disable, Enable	Disable	
3	ICS Address:	1 to 127	65	
4	Power Up Start Delay Time	0 to 60 °Seconds	0 Seconds	
5	Design Delta Temp Setpoint:	4 to 30 °F, 2.2 to 16.7 °C	100 °F, 5.5 °C	
6	Lvg Wtr Temp Cutout Setpoint: (When this setpoint is within 1.7 °F of the Front Panel Chilled Water Setpoint, the Front Panel Chilled Water Setpoint is increased along with this setpoint to maintain the differential)	-10 to 360 °F, -23.2 to 2.2 °C	36 °F, 2.2 °C	
7	Low Rfgt Temp Cutout Setpt: (When this setpoint is within 6 °F of the Front Panel Chilled Water Setpoint, the Front Panel Chilled Water Setpoint is increased along with this setpoint to maintain the differential.)	-35 to 360 °F, -37.2 to 2.2 °C	32 °F, 0.0 °C	
8	Condenser Limit Setpoint:	80 to 120%	93%	
9	Maximum RI Timer Setting	30 to 60 Minutes	60 Minutes	
10	Purge Control/Type:	Micro Purge, Stand-Alone Purge	Micro Purge	
11	Purge Max Pumpout Rate:	1 to 100 minutes/24 hrs	20 Minutes /24 Hours	
12	Purge Service Excessive Pumpout Override Timer	1 to 72 Hours	0 Hours	
13	Prg Low Liq Temp Inhibit	Enable, Disable	Disable	
14	Prg Low Liq Temp Inhibit Setpt: (Does not display unless above feature = Enable")	32 to 50 °F, 0.0 to 10 °C	40 °F, 4.4 °C	
15	Surge Protection:	Disable, Enable	Enable	
16	Under/Over Voltage Protection: (Permits "Enable only if Option Installed)	Disable, Enable	Enable	
17	Phase Reversal Protection:	Disable, Enable	Enable	
18	Phase Unbalance Protection:	Disable, Enable	Enable	
19	Momentary Power Loss Protection:	Disable, Enable	Enable	
20	Enhanced Oil Temp Protection	Disable, Enable	Enable	
21	Oil Temp Setpoint:	100 to 160 °F, 37.8 to 71.1 °C	143.5 °F,61.9 °C	
22	Low Oil Temp Cutout:	80 to 140 °F, 26.7 to 60 °C	95 °F, 35 °C	
23	High Discharge Temp Cutout:	170 to 220 °F, 76.6 to 104.4 °C	200 °F, 93.3 °C	
24	Soft Load Control:	Disable, Enable	Disable	
25	Soft Load Starting current Limit:	40 to 100%	100%	
26	Soft Load Current Limit Rate:	0.5 to 5.0% /Minute	5.0% /Minute	
27	Soft Load Lvg Water Rate:	0.5 to 5.0 °F/Minute 0.3 to 2.8 °C/Minute	5.0 °F/Minute 2.8 °C/Minute	

28	Hot Gas Bypass Control	Disable, Enable	Enable	
29	HGBP Timer	Disable, Enable; Unlimited Time	Enable	

	Menu Item	Choices	Default	Design/Actual
30	Maximum HGBP Time (Displayed only if HGBP is installed and HGBP Timer is enabled)	1 to 480 minutes	30 minutes	
31	HGBP Vane Position	0 to 30%	10%	
32	LWT Proportional Gain Setpoint	0 to 100%/ °F 0 to 180%/ °C	10%/ °F 18%/°C	
33	LWT Integral Gain Setpoint	0 to 1%/ °F 0 to 1.8%/ °C	0.1 10%/ °F 0.198%/ °C	
34	LWT Derivative Gain Setpoint	0 to 10%/ °F 0 to 18%/ °C	0.00%/ °F 0.00%/ °C	
28	IGV MAXIMUM Travel Setpt:	0 to 60,000 Steps	50,000 Steps	
29	Guide Vane Closed Travel Stop	0 to 100%	0%	
30	AF Adjustable Speed Control Algorithm	Disable, Enable	Enable	
31	AF Leaving Water Standard Deviation	0.5 to 4.0	1.0	
32	AF Pressure Coefficient Constant	0 to 2000	800	
33	AF Re-Optimization Factor	0.03 to 1.00	0.30	
34	AF Re-Optimization Timer	1 to 255	24	
35	AF Boundary PC Y-Intercept	0.01 to 2.00	0.40	
36	AF Boundary PC Y-Intercept Maximum	0.01 to 2.00	2.00	
37	AF Pressure Error Deadband	0.001 to 1.000	0.030	
38	AF Proportional Speed Gain	1 to 100	50	
39	Minimum Capacity Timer	Disable, Enable; Unlimited Time	Enable	
40	Time Permitted at Mm Cap	1 to 480 minutes	30 minutes	
41	Local Atmospheric Pressure	10 to 16 psig 68.9tollO.3kPa	14.7 psig 101.3kPa	
42	Mm Delta Press Calib (2 VDC)	0 to 400 psid 0 to 2758 kPa	0 psid 0 kPa	
43	Max Delta Press Calib (10 VDC)	1 to 400 psid 7 to 2758 kPa	30 psid 207 kPa	
44	Inlet Guide Vane Stroke Time	15 to 100 seconds	45 seconds	
45	Low Diff Oil Pressure Cutout	9 to 35 psid 62 to 241 kPa	12 psid 64 kPa	
46	Pre Lube Setpt	20 to 60 seconds	60 seconds	
47	Post Lube Setpt	30 to 420 seconds	180 seconds	
48	Check Oil Filter Diagnostic	Disable, Enable	Disable	
49	Check Oil Filter Setpt	Diag Disabled, 9 to 60 psid, 62 to 414 kPa	15 psid, 103 kPa	

FastPak™ "Settings Group" Menu Record

Machine Configuration Group:

	Menu Item	Choices	Default	Design/Actual
1	Unit Frequency	60 HZ, 50 HZ	60 HZ	
2	Unit Type	CVHE & CVHG, CVHF, CVHB, CVGE, CVAE, FastPak Water Cooled, FastPak Air Cooled	CVHE	
3	Nominal Unit Tons	100 to 1800 Tons	300 Tons	
4	Refrigerant Type	R114, R500, R502	R123	
5	Refrigerant Monitor Type	None, PC	None	
6	Starter Type	Undefined, Adaptive Frequency, Y-Delta, X-Line, Solid State, Auto, Transformer, Primary Reactor, AFDB, SMCDP, Stand Alone No Str Module	Y-Delta	
7	Level 2 Contactor Integrity Test (Startup Contactor Test-Y-D only)	Disable, Enable (Not available on any FastPak models)	Disable	
8	Rated Load Amps	0 to 2,500	500	
9	Motor Heating Constant	0 to 100 Minutes	25 Minutes	
10	Current Overload Setting #1 (See Manual for Setup Procedure)	00 to 31	00	
11	Current Overload Setting # 2 (See Manual for Setup Procedure)	224 to 255	255	
12	Maximum Accel Time Setpt# 1 (See Manual for Recommend Setpt)	6 to 64 Seconds	27 Seconds	
13	(255 Minus Timer Setpt #1 above)	191 to 249 Seconds	226 Seconds	
14	Heatsink Start Inhibit Temperature Setpoint	100.0 to 200.0 °F (37.8 to 93.3 °C), in increments of 0.1 °F/ °C	100 °F (93.3 °C)	
15	External Chilled Wtr Setpoint	Installed, Not Installed	Not Installed	
16	External Current Limit Setpt	Installed, Not Installed	Not Installed	
17	Acceleration Time Out Action	Shutdown, Transition	Shutdown	
18	Motor Temp Protection	3 Winding Sensors, MTC Switch	3 Winding Sensors	
19	Motor Winding RTD Type	100 Ohm/ 0 °C, 75 Ohm/ 75 °C	75 Ohm /75 °C	
20	High Pressure Cutout setting	-5 to 500 PSIG	15 PSIG for standard unit 25 PSIG for ASME unit	
21	Line Voltage Sensing Option	Installed, Not Installed	Not Installed	
22	Unit Line Voltage	180 to 6600	460	
23	Hot Gas Bypass Option	Installed, Not Installed	Not Installed	
24	Condenser Press. Sensor Option	Installed, Not Installed	Not installed	
25	Bearing Temp Sensors Option	Installed, Not Installed	Not installed	
26	Discharge Temp Sensor Option	Installed, Not Installed	Not installed	
27	Ice Building Option	Installed, Not Installed	Not installed	
28	External Analog Inputs	4-20 mA, 2-10 VDC	4-20 mA	
29	Tracer Option	Installed, Not Installed	Not Installed	
30	TCI Option	Installed, Not Installed	Not Installed	

Machine Configuration Group:

	Menu Item	Choices	Default	Design/Actual
31	Printer Option	Installed, Not Installed	Not Installed	
32	Duplex Control Module (DCM) Option	Installed, Not Installed	Not Installed	
33	IGV Output Type	Stepper Motor, Pulsed	Stepper Motor	
34	Oil Pressure Protection	Xducer; Diff Switch	Xducer	
35	Programmable Analog Output	Not Used;% RLA;% Cond Press; Refrig Diff Press	% RLA	
36	Program Relay [N] where [N] = 1, 2 or 3	Not Used; Comp Running; MMR Alarm; MAR Alarm; MMR + MAR Alarm; Limit Warning; Ice Making; Head Relief Request; Tracer Controlled; Max Capacity	1 = MMR + MAR Alarm 2 = Comp Running 3 = Not Used	
37	Current Transducer	Cutler Hammer, Other	Cutler Hammer	
38	Current Transducer at 100% RLA (Displayed only if Current Transducer is set to "Other")	-10.0 to -5.0 VDC in 0.1 VDC Increments		
39	Outdoor Air Temp Sensor	Installed, Not Installed	Installed	

Refrigerant Monitor Settings Group:

	Menu item	Choices	Design/Actual
1	Alarm Level 1		
2	Alarm Level 2		
3	Alarm Level 3		
4	Refrigerant Audible Alarm	Disable, Alarm 1, Alarm 2 Alarm 3	
5	Trouble Audible Alarm	Disable, Enable	
6	Alarm 1 Latching Status	Latching, Non-Latching	
7	Alarm 2 Latching Status	Latching, Non-Latching	
8	Alarm 3 Latching Status	Latching, Non-Latching	
9	Channel Scanner (Displayed only when refrigerant monitor mode is in "Warm-up".)	Installed, Not Installed	
10	Scanner Channel 1	Active, Inactive	
11	Scanner Channel 2	Active, Inactive	
12	Scanner Channel 3	Active, Inactive	
13	Scanner Channel 4	Active, Inactive	
14	Scanner Dwell Threshold	30 to 70	
15	Auxiliary Input	Installed, Not Installed	
16	Auxiliary Input Alarm	Disable, Enable	
17	Auxiliary Input Alarm Level	4.0 to 20.0	
18	Auxiliary Input Alarm Direction	Above, Below	
19	Auxiliary Input Audible Alarm	Off, On	
20	Analog Output Range	0 to 100, 0 to 1000	

Service Tests Group:

	Menu item	Choices	Default	Design/Actual
1	Chilled Water Pump	Auto, On	Auto	
2	Condenser Water Pump	Auto, On	Auto	
5	Starter Dry Run: (Starter Dry Run Contactor Test - Y - D Only)	(Not available on any FastPak models)	Disabled	
6	Oil Pump (Set to Differential Transducer)	Auto, On	Auto	
7	Oil Pump (Set to Differential Switch)	Auto, On	Auto	
	Vane Control Status Vane Position Commands (Displayed when "Inlet Guide Vane Output" is set to "Stepper Motor".)	Manual, Auto	Auto	
8	Vane Control Status Vane Position Commands (Displayed when "Inlet Guide Vane Output" is set to "Pulsed".)	Auto, Hold, Load, Unload	Auto	
9	Manual Loading/Unloading Duty Cycle	0 to 50%	30%	
10	HGBP Valve Control is	Auto, Open, Close	Auto	
11	HGBP Valve Opening /Closing Duty Cycle (Displayed when "Inlet Guide Vane Output" is set to "Pulsed".)	0 to 50%	30%	

TRANE®

The Trane Company
3600 Pammel Creek Road
La Crosse, WI 54601
www.trane.com
An American Standard Company

Literature Order Number	CVHE-CLD-1A
File Number	CVHE-CLD-1A-6-00
Supersedes	CVHE-CLD-1
Stocking Location	La Crosse

Since The Trane Company has a policy of continuous product improvement, it reserves the right to change design and specifications without notice.

2

TRANE

Operation Maintenance

CVHE-M-4A

Library	Service Literature
Product Section	Refrigeration
Product	Cent. Liquid Chillers/Water-Cooled
Model	CVHE, Cooling-Only and Heat-Recovery
Literature Type	Operation/Maintenance
Sequence	4A
Date	September 1986
File No.	SV-RF-CTV-CVHE-M-4A-986
Supersedes	CVHE-M-4 386

Models CVHE 013 thru 125 Centrifugal Liquid Chiller

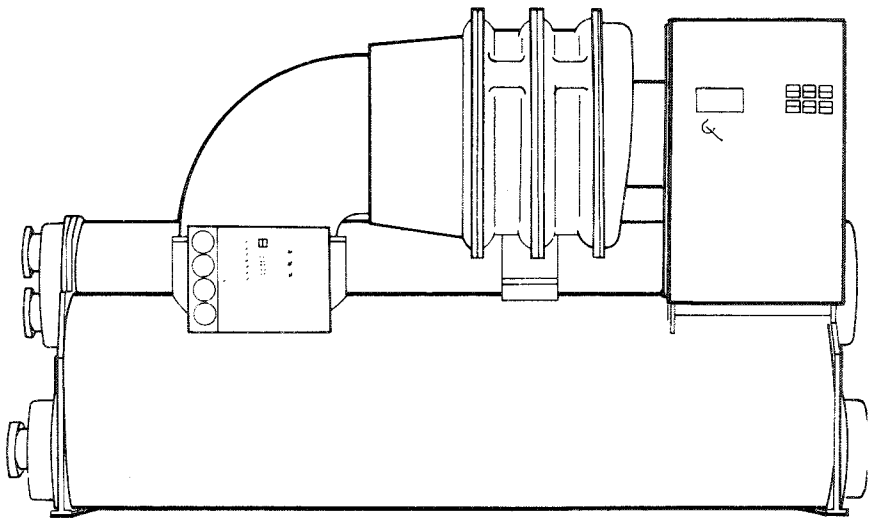

Cooling-Only and Heat-Recovery Direct-Drive CenTraVac w/Standard Control Panel

Since The Trane Company has a policy of continuous product improvement, it reserves the right to change specifications and design without notice. The installation and servicing of the equipment referred to in this booklet should be done by qualified, experienced technicians.

Drwg. No. X39640289-0

3 **Model Number Description**

6 **General Information**
6 Literature Change History
6 Introduction
6 Warnings and Cautions

7 **Mechanical Operation**
8 Cooling-Only Cycle
8 Heat-Recovery Cycle
9 Compressor Lubrication System
10 Oil Cooler
10 Motor Cooling System
11 Purge System
13 Automatic Condenser Cleaning System (Opt.)
13 –Cycle Frequency
14 –Timer Clock Programming
14 –Diverter Cycle Time
14 –Incomplete Sequence Alarm

16 **System Control**
16 Control Panel
17 Electrical Sequence of Operation
Control Options:
21 –Pneumatic Capacity Control
22 –Sequence Panel
24 –Free-Cooling
25 –Hot Gas Bypass
26 –Demand Limit Interface
26 –Chilled Water Reset Interface
26 –Chilled Water Reset
28 Auto. Cond. Cleaning System

29 **Unit Start-Up/Shutdown Procedures**
29 Daily Unit Start-Up
29 Daily Unit Shutdown
29 Seasonal Unit Start-Up
29 Seasonal Unit Shutdown

30 **Periodic Maintenance**
30 Daily Maintenance & Checks
30 Weekly Maintenance
31 Every Three Months
31 Every Six Months
31 Off-Season Maintenance
32 Annual Maintenance
32 Other Maintenance Recommendations

34 **Maintenance Procedures**
34 Purge Unit Maintenance
34 –Purge Drum Cleanup
36 –Drum Water Elimination
36 Lubrication
38 Refrigerant Charge
38 Cleaning the Condenser
39 Cleaning the Auxiliaries
39 Compressor Oil
39 –Draining the Oil Sump
39 –Filling the Oil Sump
39 Control Settings & Adjustments

40 **Trouble Analysis**

46 **Operating Log**

Notice

The Trane Company urges that all HVAC servicers working on Trane equipment, or any manufacturer's products, make every effort to eliminate, if possible, or vigorously reduce the emission of CFC, HCFC and HFC refrigerants to the atmosphere resulting from installation, operation, routine maintenance, or major service on this equipment. Always act in a responsible manner to conserve refrigerants for continued use even when acceptable alternatives are available.

Conservation and emission-reduction can be accomplished by following recommended Trane service and safety procedures published in Trane General Service Bulletin CTV-SB-81. The information and procedures provided in CTV-SB-81 supersedes those published in this manual. Copies of this bulletin may be obtained by contacting your local Trane commercial product representative.

The Trane Company
La Crosse, Wisconsin 54601-7599
Printed in U.S.A.

©American Standard Inc. 1991

Model Number Description

All standard Trane products are identified by a multiple-character model number that precisely identifies a particular type of unit. An explanation of the alphanumeric identification code used with CenTraVac units is provided on the next three pages. Its use will enable the owner/operator, installing contractor(s), and service engineer(s) to define the operation, components and options for a particular unit.

Be sure to refer to the model number stamped on the unit nameplate (shown below, and mounted on the left-hand side of the unit control panel enclosure) when ordering replacement parts or requesting service.

Note: Trane-built unit-mounted starters are identified by a separate number found on the starter.

Model No.
Digit

CV	H	E	-	014	A	-	A	K	4	A	B	235	5	C	E
1,2	3	4		5,6,7	8		9	10	11	12	13	14,15,16	17	18	19 (cont.)

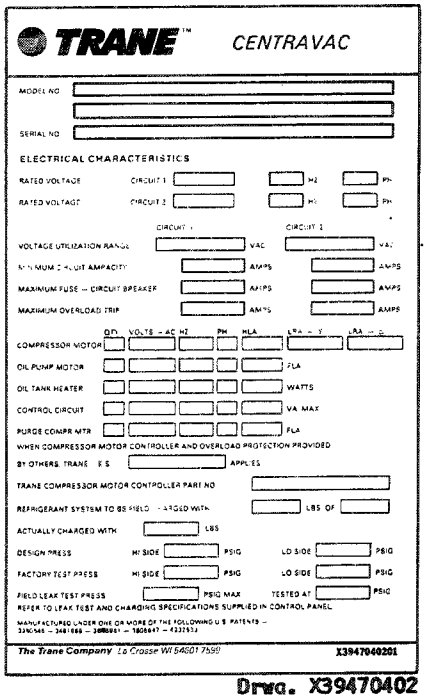
TRANE™ CENTRAVAC

MODEL NO

SERIAL NO

ELECTRICAL CHARACTERISTICS

RATED VOLTAGE CIRCUIT 1 ___ HZ ___ PH

RATED VOLTAGE CIRCUIT 2 ___ HZ ___ PH

	CIRCUIT 1	CIRCUIT 2
VOLTAGE UTILIZATION RANGE	___ VAC	___ VAC
MINIMUM CIRCUIT AMPACITY	___ AMPS	___ AMPS
MAXIMUM FUSE – CIRCUIT BREAKER	___ AMPS	___ AMPS
MAXIMUM OVERLOAD TRIP	___ AMPS	___ AMPS

	QTY	VOLTS – AC	HZ	PH	RLA	LRA – Y	LRA – Δ
COMPRESSOR MOTOR							
OIL PUMP MOTOR					FLA		
OIL TANK HEATER					WATTS		
CONTROL CIRCUIT					VA MAX		
PURGE COMPR MTR					FLA		

WHEN COMPRESSOR MOTOR CONTROLLER AND OVERLOAD PROTECTION PROVIDED BY OTHERS, TRANE P.S. ___ APPLIES

TRANE COMPRESSOR MOTOR CONTROLLER PART NO ___

REFRIGERANT SYSTEM TO BE FIELD - CHARGED WITH ___ LBS OF ___

ACTUALLY CHARGED WITH ___ LBS

DESIGN PRESS HI SIDE ___ PSIG LO SIDE ___ PSIG

FACTORY TEST PRESS HI SIDE ___ PSIG LO SIDE ___ PSIG

FIELD LEAK TEST PRESS ___ PSIG MAX TESTED AT ___ PSIG

REFER TO LEAK TEST AND CHARGING SPECIFICATIONS SUPPLIED IN CONTROL PANEL

MANUFACTURED UNDER ONE OR MORE OF THE FOLLOWING U.S. PATENTS – 3365546 – 3481166 – 3808847 – 4323913

The Trane Company La Crosse WI 54601 7599 X3947040201

Drwg. X39470402

Digits 1,2
CenTraVac

Digit 3
Direct-Drive

Digit 4
Development Sequence

Digits 5, 6, 7
Compressor Designators (Unit Capacity)

013	023	040	071	112
014	025	045	080	125
016	028	050	089	SSS
018	032	056	090	
020	036	063	100	

Digit 8
Nominal Voltage

A = 200/60/3	H = 575/60/3
B = 208/60/3	J = 600/60/3
C = 230/60/3	K = 2300/60/3
D = 380/60/3	L = 2400/60/3
E = 440/60/3	M = 4000/60/3
F = 460/60/3	N = 4160/60/3
G = 480/60/3	S = Special

Digit 9
Unit Type

A = Hermetic, Std.
B = Hermetic w/Heat-Recovery
C = Hermetic w/Aux. Condenser
D = Hermetic w/Free-Cooling
S = Special

Digit 10
Design Sequence

Digit 11
Economizer and Hot Gas Bypass

2 = Std. Economizer (Flanged Elbow)
4 = Std. Economizer w/HGBP
S = Special

Digit 12
Compressor Motor KW

A = 96	J = 204	V = 586
B = 105	K = 230	W = 653
C = 118	L = 256	X = 742
D = 131	N = 323	Y = 853
E = 142	P = 361	Z = 954
F = 155	R = 403	S = Special
G = 172	T = 453	
H = 184	U = 513	

Digit 13
Compressor Motor Vendor

Digits 14, 15, 16
Impeller Cutback Diameter

235 = 23.50	255 = 25/50
237 = 23.70	257 = 25.70
238 = 23.80	258 = 25.80
240 = 24.00	260 = 26.00
242 = 24.20	262 = 26.20
243 = 24.30	263 = 26.30
245 = 24.50	265 = 26.50
247 = 24.70	267 = 26.70
248 = 24.80	268 = 26.80
250 = 25.00	270 = 27.00
252 = 25.20	272 = 27.20
253 = 25.30	273 = 27.30
	275 = 27.50

Digit 17
Evaporator Bundle Size

Digit 18
Evaporator Length

C = Short
D = Long
S = Special

Digit 19
Evaporator Tube Specifications

A = 0.028 Cu
B = 0.035 Cu
E = 0.028 Cu (IE)

Model Number

Digit Number

A	A	1	5	C	A	1	A	0	0	0	0
20	21	22	23	24	25	26	27	28	29	30	31 (continued)

Digit 20
Evaporator Water Pass Arrangement

DESIGNATOR	NUMBER OF PASSES	TYPE[1]	CONNECTION ARRANGEMENT[2] INLET RIGHT OR LEFT HAND	INLET END, FRONT, OR REAR	OUTLET RIGHT OR LEFT HAND	OUTLET END, FRONT, OR REAR
A	1	M	—	F	—	F
B	1	M	—	R	—	R
C	1	M	LH	F	RH	R
C	1	M	RH	R	LH	F
D	1	M	LH	R	RH	F
D	1	M	RH	F	LH	R
J	2	M	LH	F	LH	R
K	2	M	LH	R	LH	F
L	2	M	RH	F	RH	R
M	2	M	RH	R	RH	F
N	3	M	LH	F	RH	R
N	3	M	RH	R	LH	F
P	3	M	RH	F	LH	R
P	3	M	LH	R	RH	F
Y	1	NM	—	E	—	E
Z	2	NM	RH	E	RH	E
1	2	NM	LH	E	LH	E
3	3	NM	—	E	—	E

[1]Type M = Marine Type NM = Non-Marine Type
[2]Connection arrangement determined when facing control panel side of unit

Digit 21
Evap. Working Pressure (Water Side)

A = Flanged; 150 psig
B = Flanged; 300 psig
C = Victaulic; 150 psig
D = Victaulic; 300 psig
E = Flanged; 150 psig (ASME)
F = Victaulic; 150 psig (ASME)
S = Special

Digit 22
Condenser Construction (Refrigerant Side)

1 = Standard
2 = ASME
S = Special

Digit 23
Condenser (Cooling) Bundle Size

Digit 24
Condenser (Cooling) Length

C = Short
D = Long
S = Special

Digit 25
Condenser (Cooling) Tube Specifications

A = 0.028 Cu
B = 0.035 Cu
M = 0.035 Cu/Ni; 90/10
E = 0.028 Cu (IE)
S = Special

Digit 26
Condenser (Cooling) Water Pass Arrangement

DESIGNATOR	NUMBER OF PASSES	TYPE[1]	CONNECTION ARRANGEMENT[2] INLET RIGHT OR LEFT HAND	INLET END. FRONT, OR REAR	OUTLET RIGHT OR LEFT HAND	OUTLET END. FRONT, OR REAR
E	2	M	LH	F	LH	F
F	2	M	LH	R	LH	R
G	2	M	RH	F	RH	F
H	2	M	RH	R	RH	R
J	2	M	LH	F	LH	R
K	2	M	LH	R	LH	F
L	2	M	RH	F	RH	R
M	2	M	RH	R	RH	F
Z	2	NM	RH	E	RH	E
1	2	NM	LH	E	LH	E
S	Special					

[1]Type M = Marine Type NM = Non-Marine Type
[2]Connection arrangement determined when facing control panel side of unit

Digit 27
Cond. (Cooling) Water Pass Arrangement

A = Flanged; 150 psig
B = Flanged; 300 psig
C = Victaulic; 150 psig
D = Victaulic; 300 psig
E = Flanged; 150 psig (ASME)
F = Victaulic; 150 psig (ASME)
S = Special

Digit 28
Condenser (Heating) Bundle Size

Digit 29
Condenser (Heating) Length

0 = None
C = Short
D = Long
S = Special

Digit 30
Condenser (Heating) Tube Specifications

0 = None
A = 0.028 Cu
B = 0.035 Cu
M = 0.035 Cu/Ni; 90/10
E = 0.0.28 Cu (IE)
S = Special

Digit 31
Condenser (Heating) Water Pass Arrangement

DESIGNATOR	NUMBER OF PASSES	TYPE[1]	CONNECTION ARRANGEMENT[2] INLET RIGHT OR LEFT HAND	INLET END FRONT OR REAR	OUTLET RIGHT OR LEFT HAND	OUTLET END FRONT OR REAR
E	2	M	LH	F	LH	F
F	2	M	LH	R	LH	R
G	2	M	RH	F	RH	F
H	2	M	RH	R	RH	R
J	2	M	LH	F	LH	R
K	2	M	LH	R	LH	F
L	2	M	RH	F	RH	R
M	2	M	RH	R	RH	F
Z	2	NM	RH	E	RH	E
1	2	NM	LH	E	LH	E
0	No Heat Recovery Condenser					

[1]Type M = Marine Type NM = Non-Marine Type
[2]Connection arrangement determined when facing control panel side of unit

Model Number

Digit Number

0	0	0	0	5	1	A	0	0
32	33	34	35	36	37	38	39	40

Digit 32
Condenser (Heating) Working Pressure

0 = None
A = Flanged; 150 psig
B = Flanged; 300 psig
C = Victaulic; 150 psig
D = Victaulic; 300 psig
E = Flanged; 150 psig (ASME)
F = Victaulic; 150 psig (ASME)
S = Special

Digit 33
Auxiliary Condenser Size (Tube and Bundle)

0 = None
A = 0.028 Cu; Small Bundle
B = 0.028 Cu; Large Bundle
S = Special

Digit 34
Auxiliary Condenser Water Pass Arrangement

DESIGNATOR	NUMBER OF PASSES	TYPE[1]	CONNECTION ARRANGEMENT[2]			
			INLET		OUTLET	
			RIGHT OR LEFT HAND	END FRONT OR REAR	RIGHT OR LEFT HAND	END FRONT OR REAR
E	2	M	LH	F	LH	F
F	2	M	LH	R	LH	R
G	2	M	RH	F	RH	F
H	2	M	RH	R	RH	R
J	2	M	LH	F	LH	R
K	2	M	LH	R	LH	F
L	2	M	RH	F	RH	R
M	2	M	RH	R	RH	F
Z	2	NM	RH	E	RH	E
1	2	NM	LH	E	LH	E
0	No Auxiliary Condenser					

[1]Type M = Marine Type NM = Non-Marine Type
[2]Connection arrangement determined when facing control panel side of unit

Digit 35
Auxiliary Cond. Working Pressure (Water Side)

0 = None
A = Flanged; 150 psig
B = Flanged; 300 psig
C = Victaulic; 150 psig
D = Victaulic; 300 psig
S = Special

Digit 36
Orifice*

1 = 4 Sizes Under
2 = 3 Sizes Under
3 = 2 Sizes Under
4 = 1 Size Under
5 = Nom. Size Orifice
6 = 1 Size Over
7 = 2 Sizes Over
S = Special
*CVHE computer selection program includes proper orifice designator.

Digit 37
Insulation & Shipping

DESIGNATOR	INSULATION	PACKAGING			ISOLATION	
		STD	STD EXPORT	FULL SHEATH EXPORT	NEOPRENE	SPRING
1	X	X			X	
2		X			X	
3	X		X		X	
4			X		X	
5	X			X	X	
6				X	X	
A	X	X				X
B		X				X
C	X		X			X
D			X			X
E	X			X		X
F				X		X
S	SPECIAL					

Digit 38
Control Panel

DESIGNATOR	OPTION[1]					
	ELECTRIC CONTROL	PNEUMATIC CONTROL	NUMBER OF STARTS COUNTER	ELAPSED TIME METER	UL APPROVAL	CSA APPROVAL
A	X				X	
B	X					X
C	X					
D		X			X	
E		X				X
F		X				
G	X		X	X	X	
H	X		X	X		X
J	X		X	X		
K		X	X	X	X	
L		X	X	X		X
M		X	X	X		

[1] X indicates the option(s) provided

Digit 39
Starter

0 = w/o Starter
1 = w/Unit-Mounted Starter
S = Special

Digit 40
Starter Options

DESIGNATOR	STARTER OPTIONS*				
	AMMETER	VOLTMETER	CKT. BRKR.	HI INTERRUPT CAPACITY CKT. BREAKER	GROUND FAULT PROTECTION
A					
B	X				
C		X			
D	X	X			
E			X		
F	X		X		
G		X	X		
H	X	X	X		
J				X	
K	X			X	
L		X		X	
M	X	X		X	
N			X		X
P	X		X		X
R		X	X		X
T	X	X	X		X
U				X	X
V	X			X	X
W		X		X	X
Y	X	X		X	X
0	NO UNIT-MOUNTED STARTER				

**"X" indicates the starter option(s) included.

General Information

Literature Change History

CVHE-M-4 (February 1986)
Original issue of manual; provides operation, maintenance, and diagnostic information for CVHE units of "F" through "H" design. Also includes information on automatic condenser cleaning system.

CVHE-M-4A (September 1986)
Corrections made to front cover; manual also covers "J" design; changes made to purge maintenance instructions.

Introduction

This manual describes the operation and maintenance of Model CVHE Cooling-Only and Heat-Recovery CenTraVac liquid chillers. Its use will enable the owner/operator to understand the chiller systems, and to successfully operate and maintain the machine. Trouble analysis information is provided at the end of this manual to allow the operator to analyze and resolve a number of system malfunctions, if any should occur. (If mechanical problems do occur, however, Trane recommends that trained service personnel be contacted to ensure proper diagnosis and repair of the unit.)

Warnings and Cautions

Notice that warnings and cautions appear at appropriate intervals throughout this manual. Warnings are provided to alert operating and service personnel to potential hazards that could result in personal injury or death; they do not replace the manufacturer's recommendations. Cautions are designed to alert personnel to conditions that could result in equipment damage.

Your personal safety and the proper operation of this machine depend upon the strict observance of these precautions.

Mechanical Operation

General

Each CVHE unit is comprised of five basic components: the evaporator, three-stage compressor, water-cooled condenser, two-stage economizer, and related interconnecting piping. A heat-recovery or auxiliary condenser can be factory-added to the basic unit assembly to provide a heat-recovery cycle. Refer to Figure 1 for an illustration of a typical unit.

Following are discussions of the unit's cooling-only and heat-recovery modes of operation. A pressure/enthalpy diagram (shown in Figure 2) is provided to further illustrate unit operation.

Figure 1
Typical CVHE Chiller
(General Unit Assembly Shown)

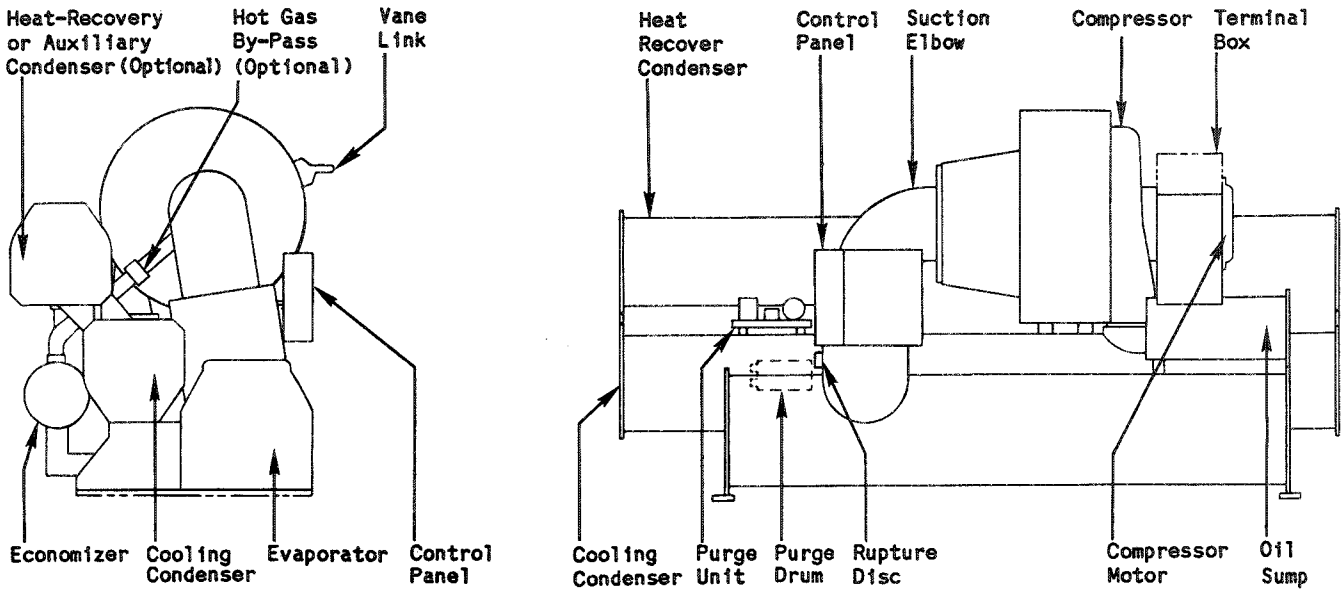

Figure 2
CVHE Pressure/ Enthalpy Curve

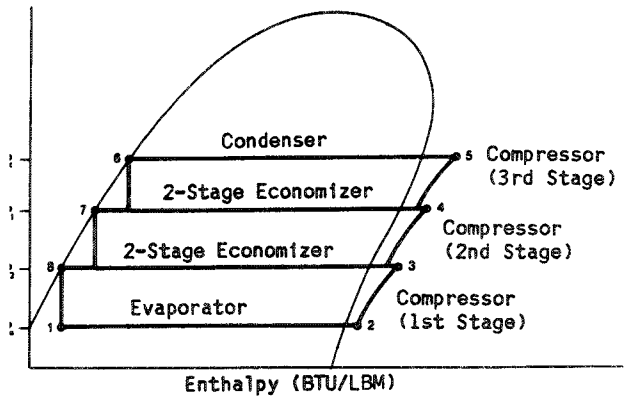

Cooling-Only Cycle

When the CVHE is functioning in the cooling mode, liquid refrigerant is distributed along the length of the evaporator and sprayed through small holes in a distributor (which runs the entire length of the shell) to uniformly coat each evaporator tube. Here, the liquid refrigerant absorbs enough heat from the system water circulating through the evaporator tubes to vaporize. The gaseous refrigerant is then drawn through the eliminators (which remove droplets of liquid refrigerant from the gas) and first-stage variable inlet guide vanes, and into the first-stage impeller. (The inlet guide vanes are designed to modulate the flow of gaseous refrigerant to meet system capacity requirements; they also prerotate the gas, allowing it to enter the impeller at an optimal angle that maximizes efficiency at all load conditions.)

Compressed gas from the first-stage impeller flows through the fixed, second-stage inlet vanes and into the second-stage impeller. Here, the refrigerant gas is again compressed, and then discharged through the third-stage variable guide vanes and into the third-stage impeller. Once the gas is compressed a third time, it is discharged into the condenser.

Baffles within the condenser shell distribute the compressed refrigerant gas evenly across the condenser tube bundle. Cooling tower water--circulated through the condenser tubes--absorbs heat from the refrigerant, causing it to condense. The liquid refrigerant then passes through an orifice plate and into the two-stage economizer.

The economizer reduces the energy requirements of the refrigeration cycle by eliminating the need to pass all of the gaseous refrigerant through the three stages of compression. See Figure 3. Notice that some of the liquid refrigerant will "flash" to a gas because of the pressure drop created by the orifice plates, thus further cooling the liquid refrigerant. This flash gas is then drawn directly from the first (Chamber A) and second (Chamber B) stages of the economizer into the third- and second-stage impellers of the compressor, respectively. The remaining liquid refrigerant flows through another orifice plate (labelled "C" in Figure 3) to the evaporator.

Note: Some CVHE units are equipped with single-stage economizers. This type of economizer serves the same function as the two-stage economizer, but the flash gas is discharged only to the third stage of the compressor.

Heat-Recovery Cycle

The purpose of the heat-recovery cycle is to salvage the heat that is normally rejected to the atmosphere through the cooling tower, and put it to beneficial use. For example, a high-rise office building may experience simultaneous heating and cooling requirements during the winter months. With the addition of a heat-recovery cycle, the heat removed from the building cooling load can be transferred to that area of the building which requires heat. (Remember that a cooling load must exist to act as a heat source if the heat-recovery cycle is to be used.)

To provide a heat-recovery cycle, a heat-recovery condenser is added to the unit; see Figure 1. Though physically identical to the standard condenser, the heat-recovery condenser is piped into a heating circuit rather than to the cooling tower.

During the heat-recovery cycle, the unit operates just as it does in the cooling-only mode except that the cooling load heat is rejected to the heating water circuit rather than to the cooling tower water circuit. When hot water is required, the heating water circuit pumps energize. The water circulated through the heat-recovery (or auxiliary) condenser tube bundle by the pumps absorbs the cooling load heat from the compressed refrigerant gas discharged by the compressor. The heated water is then used to satisfy building comfort heating requirements.

Note: Unlike the heat-recovery condenser (which is designed to satisfy comfort heating requirements), the auxiliary condenser serves a preheat function only, and is used in those applications where hot water is needed for use in kitchens, lavatories, etc. While the operation of the auxiliary condenser is physically identical to that of the heat-recovery condenser, it is comparatively smaller in size, and its heating capacity is not controlled. (Because of its small size, The Trane Company does not recommend operating the auxiliary condenser alone.)

Figure 3
Two-Stage Economizer

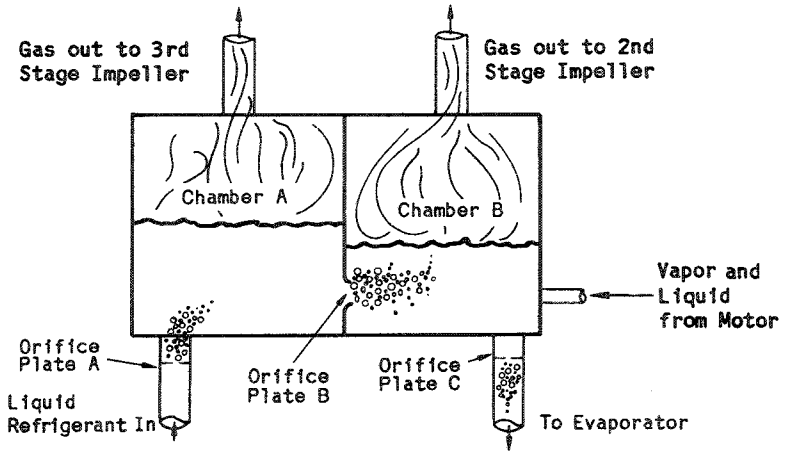

Compressor Lubrication System

A schematic diagram of the compressor lubrication system is illustrated in Figure 4; this system supplies oil to the compressor motor bearings.

Oil is pumped from the oil tank (by a pump and motor located within the tank) through an oil pressure-regulating valve designed to maintain a net oil pressure of 18 to 20 psig. It is then filtered and sent to the compressor motor bearings. From here, the oil drains back to the oil tank through return lines. Notice that each oil return line is equipped with a sight glass. This enables the operator to check for oil flow when the oil pump is energized.

To ensure proper lubrication and prevent refrigerant from condensing in the oil tank, a 1000-watt heater is secured to the oil tank exterior. Operating in response to the oil temperature control (S10), this heater energizes as necessary to maintain an oil tank temperature of 140 to 145 F when the chiller is not operating. When the chiller is operating, the temperature of the oil tank is typically 115 to 150 F.

Notice that the oil tank is vented between the compressor inlet vanes and the first-stage impeller suction cover; refer to Figure 4. During normal system operation, motor barrel pressure is greater than that of the oil tank. Therefore, any gaseous refrigerant that enters the motor bearing cavities is drawn toward the oil tank where it is removed by the vent line.

Any oil that collects in the suction cover area is pulled back to the oil tank by an ejector pump. This pump uses high-pressure condenser gas to draw the oil from the suction cover area back to the ejector; from the ejector, the oil is discharged into the oil tank.

Caution: The oil tank vent must remain completely open on those units equipped with ejectors; closure of the vent line may hamper the return of oil to the oil tank and result in damage to the chiller.

Figure 4
Compressor Lubrication and Motor-Cooling Systems

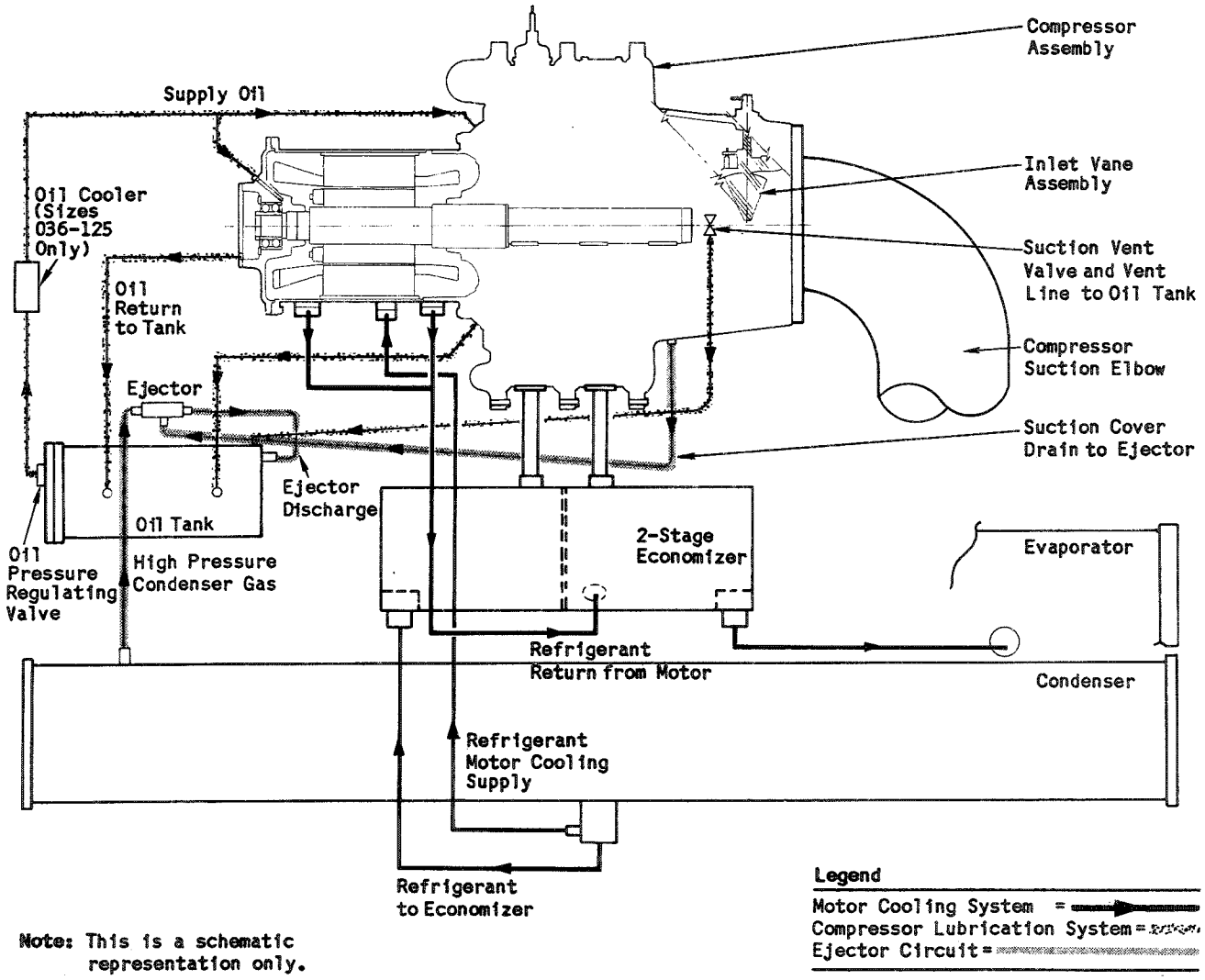

Note: This is a schematic representation only.

Oil Cooler (CVHE 036 thru 125 Only)

Oil coolers are installed as a standard feature on CVHE 036 through 125 chillers. See Figure 5 for an illustration of the oil cooler assembly.

Oil–at approximately 140 to 145 F and 18 to 20 psig–is pumped from the oil tank, through the oil pressure-regulating valve, and into the oil cooler. The oil cooler is designed to maintain a leaving oil temperature of 115 to 130 F; temperature control is accomplished with a water-regulating valve that responds to a sensor in the bearing oil supply line. When the sensor detects an increase in oil temperature, the valve opens to allow more cooling water through the oil cooler. Conversely, the valve will limit water flow through the cooler when the sensor detects a drop in oil temperature.

The water-regulating valve is field-adjustable; simply tighten the adjusting screw to decrease water flow, and loosen it to increase water flow.

Notice that a drain hole is provided in the leaving water nipple of the oil cooler; see Figure 5. When open, this drain relieves all of the water in the circuit between the cooling coil and the normally-closed water-regulating valve. Drain the water from the oil cooler as necessary (i.e., by removing the small screw tapped into the outlet pipe) to perform maintenance procedures, and to prevent cooler freeze-up during winter shutdown.

Motor Cooling System

The CVHE compressor motor is cooled with liquid refrigerant; a schematic illustration of this pressurized system is provided in Figure 4.

Liquid refrigerant flows from the condenser sump to the bottom of the compressor motor where it enters the motor chamber through a control orifice. As the liquid refrigerant touches the warmer motor components, a portion of it flashes to a gas and cools the motor. The flash gas and excess liquid refrigerant then drain to the second-stage of the economizer. Because of the positive pressure differential between the condenser and the economizer, proper refrigerant flow through the motor is maintained at all load conditions.

Figure 5
Oil Cooler Assembly
(Chiller Sizes 036 thru 125 Only)

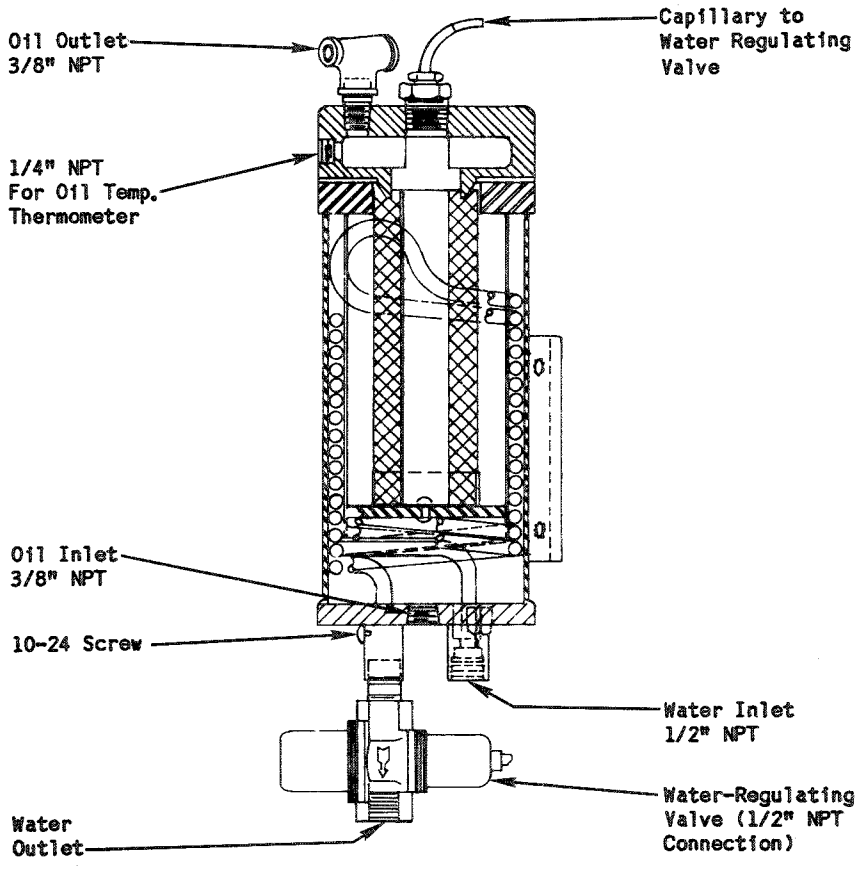

Purge System

The purge system removes noncondensible gases and water from the refrigeration system. Refer to purge system schematic shown in Figure 6. Notice that this system uses an oilless purge compressor specifically designed for CenTraVac application, thus eliminating the need for an oil separator tank. In addition, a check valve and solenoid valve (as well as an isolation valve at the condenser) are used to isolate the purge compressor from the rest of the system when it is off; this prevents refrigerant leakage.

Caution: Before performing a standing vacuum test, be sure to close the manually-operated isolation valve at the condenser; this prevents air from entering the system.

A mixture of refrigerant vapor, noncondensible gases and water is drawn from the condenser and compressed by the purge compressor. The compressed gas is then discharged directly into the purge drum; here, the condensible portion of the mixture condenses on the surfaces of the chilled water coil, while the noncondensibles rise to the top of the drum. (Refer to Figure 7 for an illustration of the CVHE's auxiliary chilled water piping.) When the pressure within the purge drum exceeds the setting of the purge drum relief valve (see Figure 6), the valve opens and exhausts the noncondensibles to the atmosphere. Any accumulated water floating on the surface of the refrigerant can be removed by opening the manual blow-off valve found on the water connection end of the purge drum.

Note: Check the purge drum for water accumulation on a weekly basis, and notice the amount of water removed. Any visible accumulation of water indicates that there is an air or water leak in the unit; if this condition occurs, be sure to contact a qualified service organization to correct this problem as soon as possible.

The remaining liquid refrigerant passes through a float valve within the purge drum and re-enters the refrigerant system through a valve at the evaporator.

The oilless ITT purge unit is controlled by the purge switch on the control panel as follows:

OFF - Purge will not operate.

MANUAL - Purge will run continuously. This position is for service use only. The purge should not be left in this position during normal operation.

Note: When the unit is operating in the heating mode, close the manual shutoff valves on the cooling condenser. Reverse this procedure when the unit is operating in the heat-recovery mode. Purge only from the active condenser.

AUTO - In this position, the purge timer will run the compressor for five minutes out of every hour of machine operation. This is the normal switch position for machine purging.

Recommended operation of the new purge unit is in the "auto" mode or manually once per week for one hour.

Figure 6
Purge System Schematic

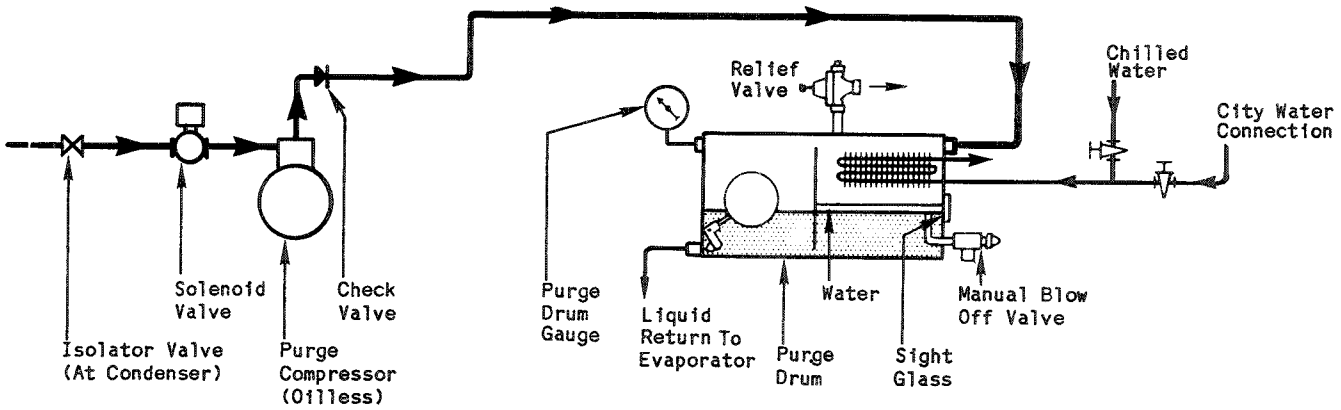

When the purge unit is operated in the "auto" mode, the purge compressor starts and stops under control of the timer. The timer should be set to operate for five minutes every hour. The timer can be adjusted to run the purge for less than five minutes per hour, if desired, to slow wear on the purge compressor rings.

Note: If five minutes per hour is not sufficient to keep the unit purged of air, the "on" time can be increased by adjusting the timer. However, operation in excess of five minutes per hour indicates an unacceptable leak rate that must be repaired to avoid machine damage and excessive wear on the purge compressor rings.

Note: Rotation of the time adjustment knob on the purge timer will not cycle the purge on and off. If the compressor is on, turning the knob will cycle the purge off. Further revolutions of the knob will not turn the compressor back on.

Figure 7
CVHE Auxiliary Chilled Water Piping Connections

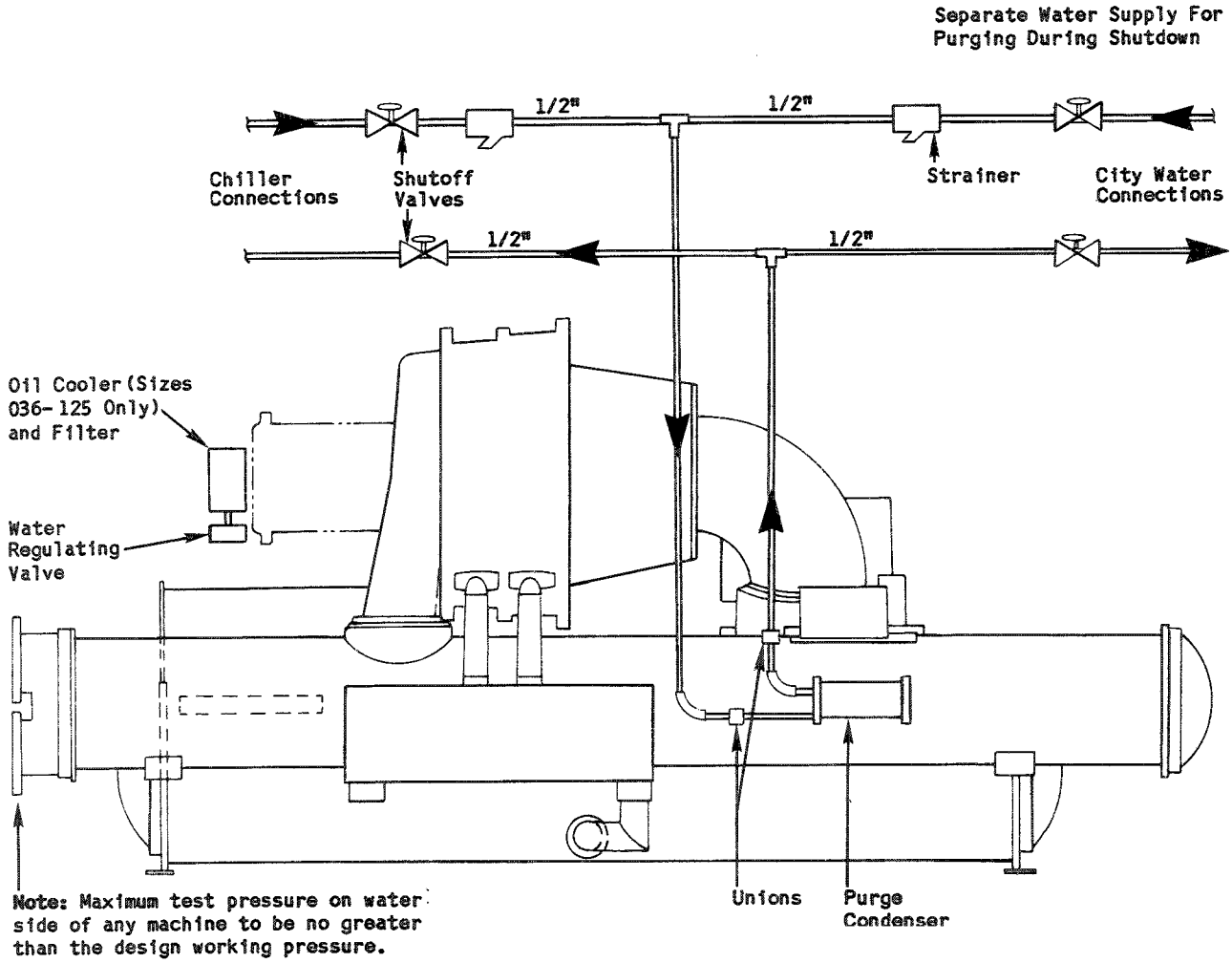

Automatic Condenser Cleaning System

The factory-installed automatic condenser cleaning system option is designed to maintain a "clean tube" fouling factor in the condenser. See Figure 8 for system components and assembly.

While the chiller is on-line, the 4-way flow diverter will activate upon a preset signal (normally every 4 to 6 hours) from the integral controller and reverse the water flow forcing the brushes through the tubes. Several seconds later, the diverter deactivates and water flow returns to normal flow causing the brushes to return to their original position.

At each tube end is a factory-installed basket and removeable end clip which retains the nylon-bristle brush.

A factory-installed and wired control panel (mounted on top of the flow diverter housing) controls all functions of the automatic condenser cleaning system. The control functions are described below.

Cycle Frequency

Cycle frequency is set at the 24-hour time clock at pre-determined time intervals. Appropriate pins should be pushed in to the desired actual time of the cleaning cycle operation. Recommened cycle intervals are every 6 hours of unit operation. With "IE" (internally enhanced) tubes, this time should be shortened to 4 hours. Cycle frequency should be increased if the water treatment program is inadequate or excessive fouling conditions exist.

Caution: To ensure proper brush release and movement, treat cooling tower water as required and install strainers or screening (3/16" openings maximum) in the condenser water supply.

In the event that a scheduled cycle would fall within a peak operating period, this cycle may be pushed ahead or back by 2 hours, provided all other scheduled times remain unchanged.

Figure 8
Automatic Condenser Cleaning System Option

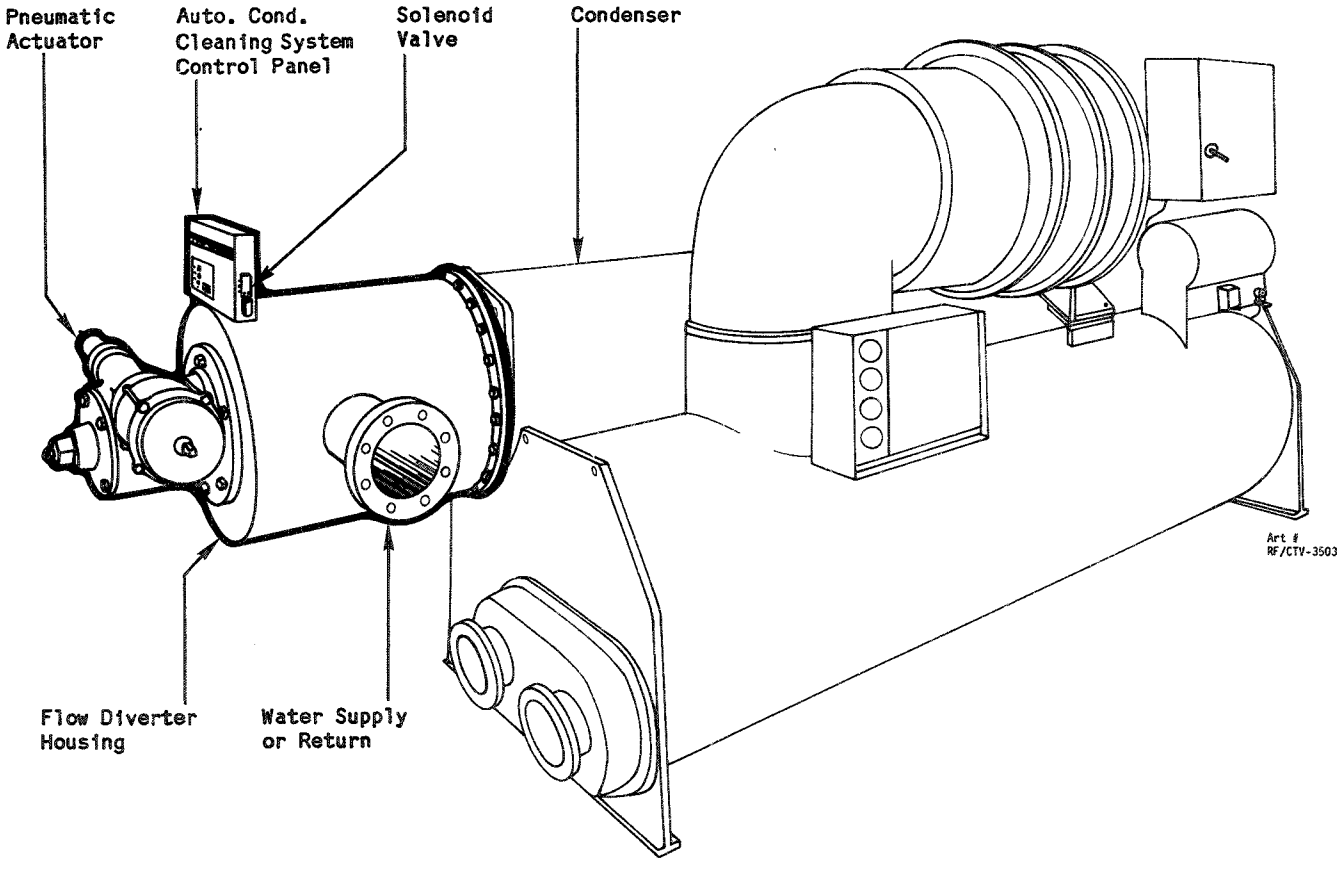

Timer Clock Programming

After determining desired frequency times, program the clock by depressing the tripper pins (found around the outer edge of the timer clock) corresponding with desired times (see Figure 9).

Note: Schedule cleaning cycle times only during the time of day the unit is in operation. During unit shutdown there is no water flow to move the brushes.

Caution: If any extended shutdown occurs, make sure the flow diverter cycles at least once each day. This will prevent binding of the diverter and possible diverter damage.

Diverter Cycle Time

The cycle time period consists of the time the diverter transfers from the "normal" to "reverse" position, plus the time the diverter remains in the "reverse" position, plus the transfer time back to "normal" position. For normal cycle times, the diverter should remain in the "reverse" position for approximately 25 seconds.

Note: The 1TR timer in the control panel (see Figure 9) should be factory-set at 30 seconds. This is the time the solenoid valve remains energized. Insure that 1TR is set at 30 seconds.

Diverter transfer times are factory-set at the exhaust restrictor set-screws located on the 4-way solenoid valve (see Figure 10). By turning each set-screw counter-clockwise, the transfer time will decrease (speeding movement) or vice-versa. Use the test cycle push-button located on the control panel to cycle the diverter until the proper transfer time is established. The pointer on the end of the pneumatic actuator (see Figure 11) will allow you to monitor diverter movement. The "N" is the normal diverter position, while "R" is the reverse flow position.

As a guideline, the transfer time in each direction should be approximately 5-6 seconds, or fast enough to minimize condenser water stagnation, but slow enough to prevent water hammer or slamming action of the diverter under full flow conditions.

Incomplete Sequence Alarm

If at any time the diverter should take longer to transfer than the alarm time time is set, the "Incomplete Sequence" alarm light will illuminate on the control panel indicating a diverter movement problem. The alarm time is set at the 2TR timer located inside the control panel (see Figure 9). The timer should be set at 3 seconds greater than the "set" transfer time. For example, if transfer time is 6 seconds, set the 2TR timer at 9 seconds. If the diverter takes longer than 9 seconds to transfer, the 2TR timer will time out, illuminating the "Incomplete Sequence Alarm" light.

Figure 9
Automatic Condenser Cleaning System Control Panel

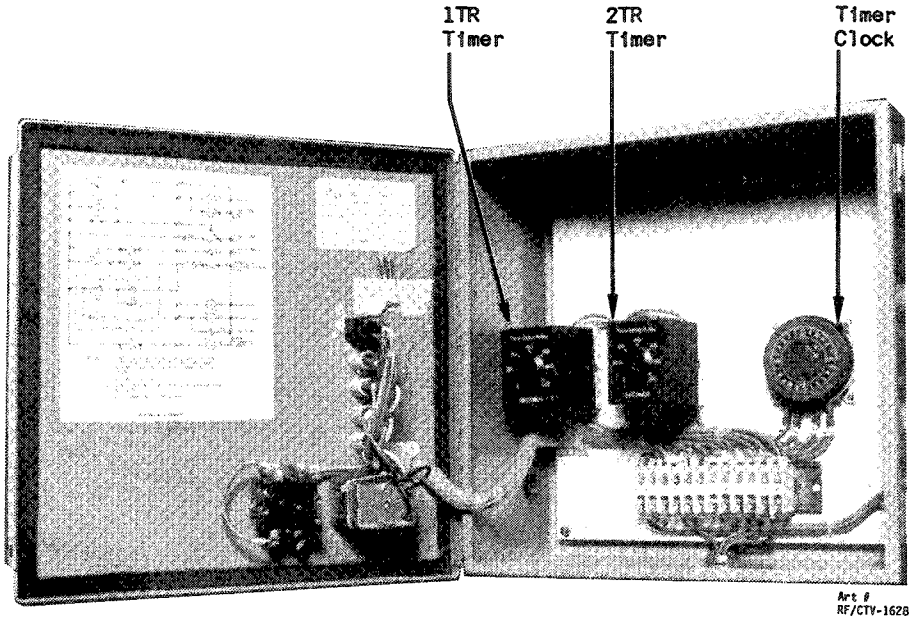

Figure 10
Automatic Condenser Cleaning System Solenoid Valve

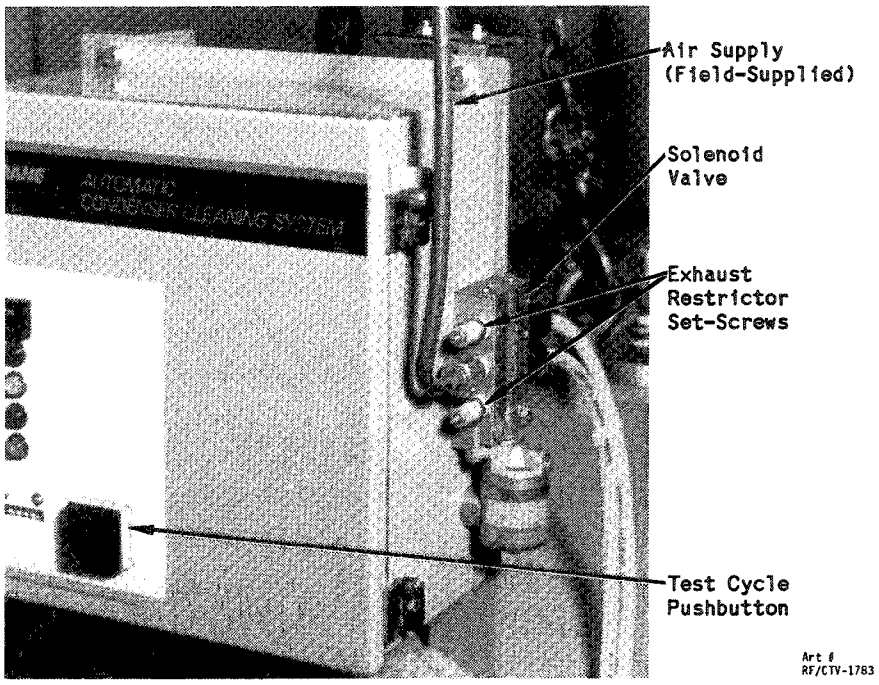

Figure 11
Pneumatic Actuator (End View)

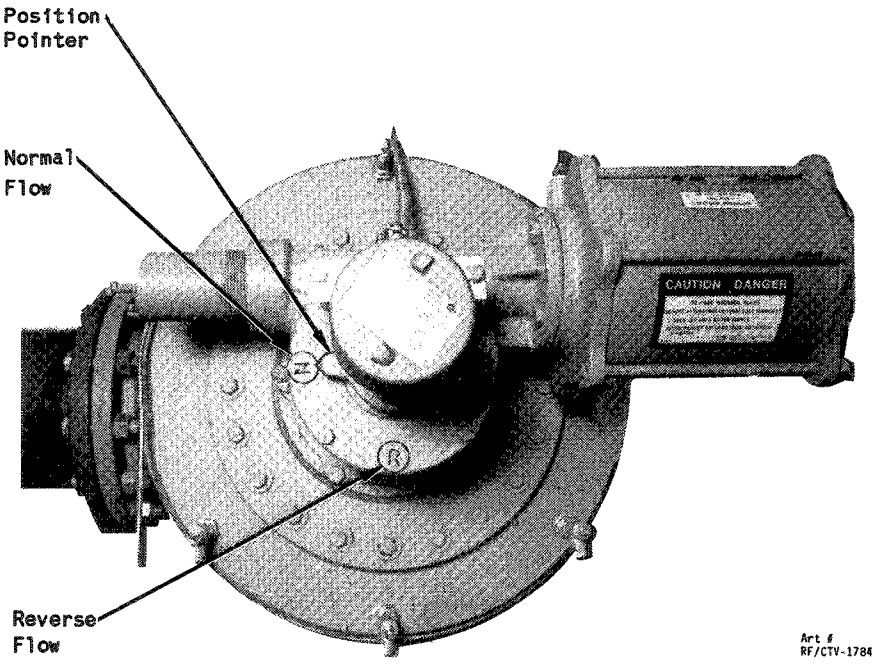

System Control

Control Panel

Safety and operating controls are housed in the CenTraVac unit control panel. Panel functions are divided into four categories, as indicated by the physical layout of the panel; see Figure 12.

1. Pressure gauges--located on the left-hand side of the panel--indicate condenser, evaporator, lubricating oil, and purge drum pressures.

2. Seven system sequence status lights (located to the immediate right of the pressure gauges) perform an important diagnostic function by monitoring the progress of the chiller start-up sequence. As each of the seven control circuit interlocks is verified, its control panel pilot light illuminates. If, for some reason, the start-up sequence is aborted, the operator can determine the point of the breach by checking these pilot lights.

3. Five safety indicators are provided in the center of the control panel, directly below the unit AUTO/OFF and purge MAN/OFF/AUTO switches; see Figure 12. These circuit interrupters are used to open the control circuit since they will hold their position in the event of a power interruption. This means that a power failure does NOT require manual resetting of all safeties.

Note: Additional alarm contacts on each of the safety indicators are brought to a terminal strip for external field-installed connection.

4. The electronic capacity control system, located on the right-hand side of the control panel, operates an electric vane motor to load and unload the chiller. This system consists of three elements: a current limiter, a chilled water temperature control, and the function control switch (and indicator lights).

The current limit control (labelled % CURRENT) can be set to control at any value below 100 percent of the motor rated load current. Motor current is sensed by three current transformers, and processed into a proportional DC voltage signal by the CenTraVac motor overload (A1). This same DC voltage signal is monitored by the current limiter. When the set percentage of rated load current is reached, the current limiter prohibits the inlet vanes from opening further; if the setting is exceeded, the inlet vanes are modulated toward the closed position.

The chilled water temperature control module uses a solid-state temperature sensor to monitor leaving chilled water temperature. If this temperature varies

Figure 12
CVHE Unit Control Panel

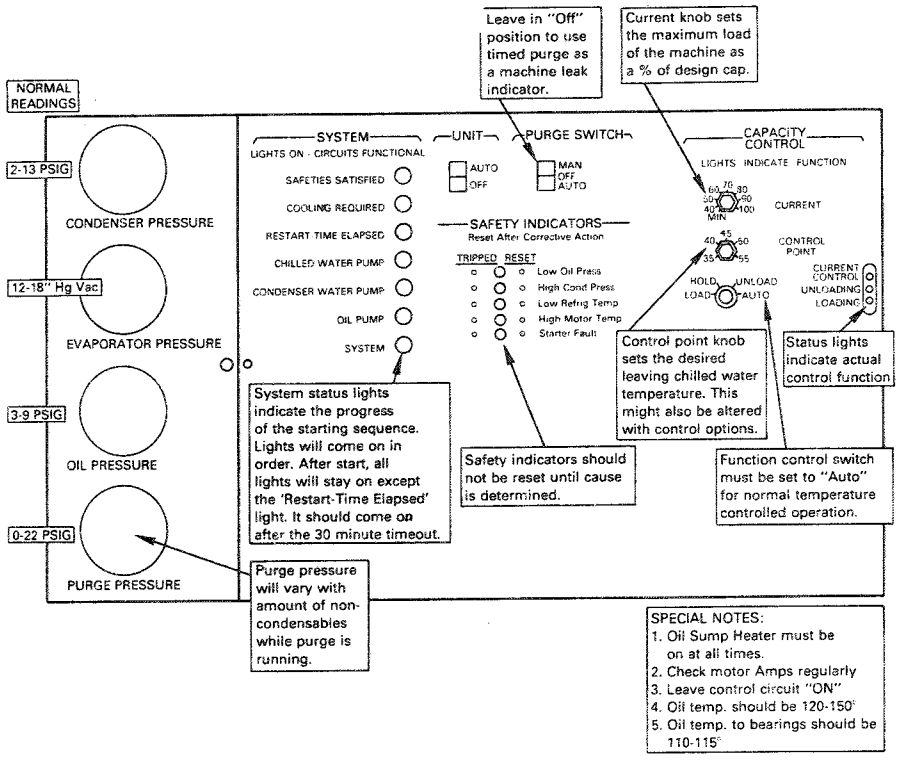

from setpoint (which is set using the knob labelled CONTROL POINT, and is based on design conditions), an electronic controller sends a pulsing signal to the inlet vane actuator; this tells the actuator to adjust the guide vanes to compensate for the variance from setpoint. (The standard control point is adjustable between 35 and 55 F.)

The function control switch, labelled with LOAD/HOLD/UNLOAD/AUTO positions, governs the function of the capacity control module. It must be set at AUTO to provide normal unit operation, and is only readjusted to one of the other switch positions for service work. To the right of the function control switch are three pilot lights which indicate whether the chiller is loading, unloading, or limiting the chiller capacity based on current draw. If all three of these pilot lights are out, the three conditions they represent are presently satisfied and the unit is functioning normally (i.e., holding with no inlet vane movement).

Note: The unit safety controls can override the setting of the function control switch regardless of its position; this override capability ensures that the chiller is protected from most dangerous operating conditions; however, no safety device protects against surge!

In addition to the gauges, status lights, safety indicators, and electronic capacity control system, the unit AUTO/OFF and purge MAN/OFF/AUTO switches are also located on the unit control panel. The unit AUTO/OFF switch allows the chiller to be shut down manually; when positioned at AUTO, the chiller will operate in response to the unit controls and safeties. (Remember that the unit will not start automatically unless all of the start-up safety conditions have been satisfied and cooling is required.) This switch is usually left in the AUTO position when cooling is needed.

Caution: Do NOT operate the purge compressor in the manual mode unless there is water flow through the purge drum! If the purge switch is positioned at MAN without water flow through the drum, refrigerant will be purged from the machine, resulting in excessive refrigerant loss.

Electrical Sequence of Operation

Be sure to refer to the typical wiring schematic provided in Figure 13 when reviewing the step-by-step electrical sequences of operation provided below

Caution: The wiring diagram provided in Figure 13 is only typical and is provided ONLY for general reference; it may not reflect the actual wiring of your unit. For specific electrical connection and schematic information, refer to the wiring diagrams which shipped with the chiller.

Electronic Capacity Control System

The electronic capacity control system used to govern chiller operation consists of six control devices; their functions are reviewed below:

Electronic Starter Overload Relay (A1) - This device monitors the compressor motor starting current, and initiates transition to full voltage when the current draw falls to 85 percent of motor RLA. Once transition is complete, it compares the motor current against a calibrated value of 107 percent of RLA; if the current reaches this value, the overload will trip to disconnect the motor.

Compressor Inlet Vane Actuator (A3) - The actuator end switch (see Line 26, Figure 13) is closed when the compressor inlet vanes are at the full closed position. A3's limit switch (see Line 38) is open whenever the inlet vanes are fully open, while a second A3 limit switch (Line 40) is open when the vanes are fully closed.

Anti-Recycle Timer (S4) - This timer (found on Line 34) limits the compressor to one start every 30 minutes, and also provides the "start" signal to the compressor motor starter (K1).

Oil Pump Timer (S9) - With a total timing cycle of four minutes, this control device allows the oil pump to provide a pre-lube cycle of approximately one minute and twenty seconds; at the end of the pre-lube interval, the anti-recycle timer (S4) energizes and the oil pump timer stops timing until the unit shuts down. At that point, S9's timing cycle resumes and will continue until the four-minute cycle is complete, thereby providing a compressor post-lube period of approximately three and one-half minutes.

Figure 13
Electrical Schematic for CVHE Units w/Electronic Capacity Control

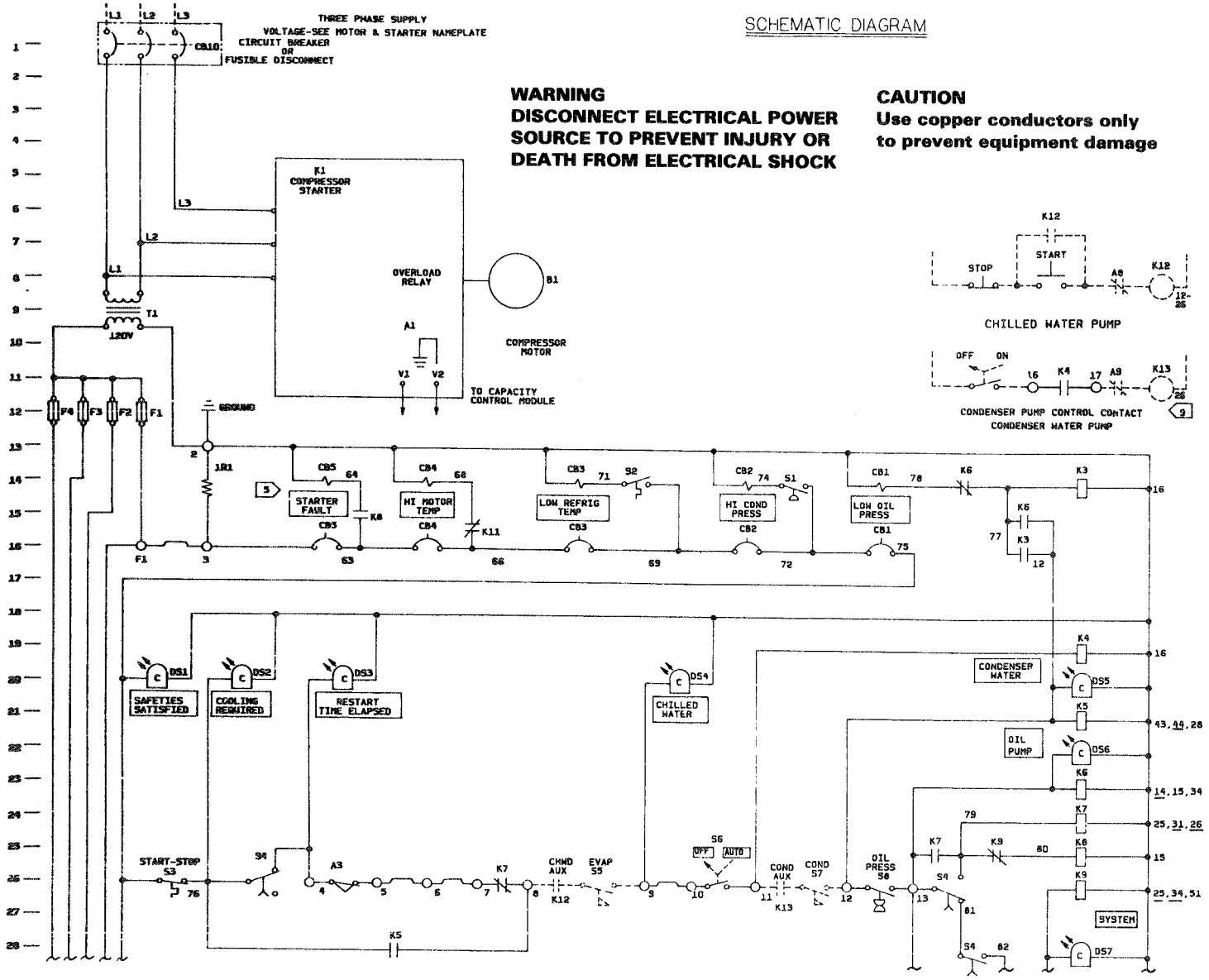

(Continued On Next Page)

Legend

A1	Electronic Starter Overload
A3	Compressor Vane Actuator
A8	Chilled Water Pump Overload (Field-Supplied)
A9	Condenser Water Pump Overload (Field-Supplied)
A12	Free-Cooling Liquid Line Valve Actuator (Optional)
A13	Free-Cooling Gas Line Valve Actuator (Optional)
A14	Hot Gas Bypass Valve Actuator (Optional)
B1	Compressor Motor
B2	Oil Pump Motor
B3	Purge Compressor Motor
B1R1	Motor Temp. Sensor
B1R2	Motor Temp. Sensor
B1R3	Motor Temp. Sensor
C1	Oil Pump Start Capacitor
CB1	Low Oil Pressure Fault
CB2	Hi Condenser Pressure Fault Indicator
CB3	Low Refrig. Temp. Fault Indicator
CB4	Hi Motor Temp. Fault Indicator
CB5	Starter Fault Indicator
CB10	Starter Main Ckt. Breaker
DS1	SAFETIES SATISFIED Indicator Light
DS2	COOLING REQUIRED Indicator Light
DS3	RESTART TIME ELAPSED Indicator Light
DS4	CHILLED WATER Flow Indicator Light
DS5	CONDENSER WATER Flow Indicator Light
DS6	OIL PUMP Indicator Light
DS7	SYSTEM Operating Indicator Light
F1	Control Power Fuse
F2	Oil Pump Fuse
F3	Oil Heater Fuse
F4	Purge Unit Fuse
F8	Oil Pump Motor Fuse
F9	Oil Pump Motor Fuse
HR1	Oil Sump Heater
K1	Compressor Motor Starter
K3	Low Oil Pressure Arming Ckt.
K4	Condenser Pump Control Relay
K5	Start Oil Pump Timer/Jump-Out Start Inhibit Circuit
K6	Oil Pressure Arming Ckt./Start S4 Timer Motor
K7	Prevent Voltage Feedback/De-energize Start Counter/Starter Fault-Arming Ckt.

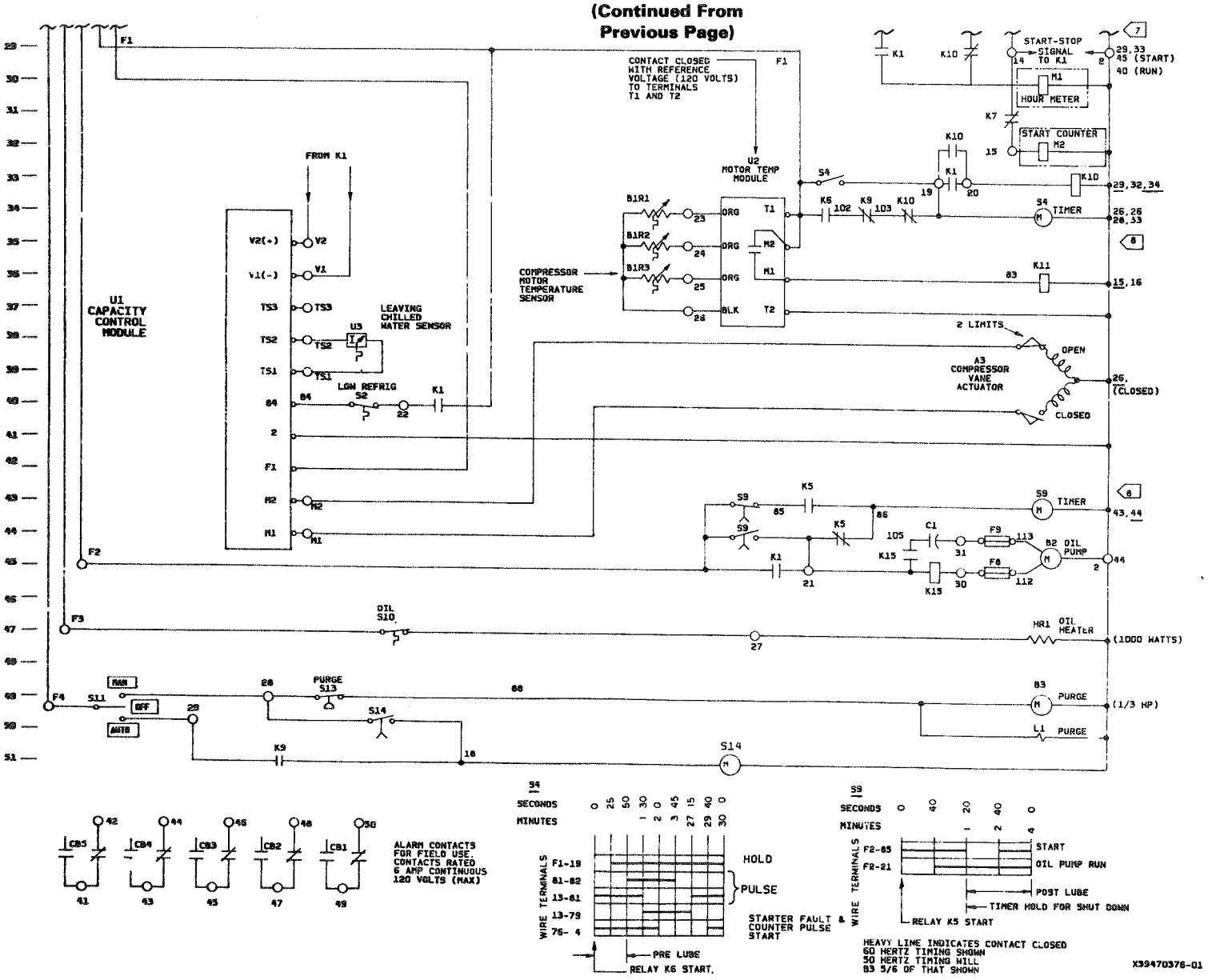

K8 Starter Fault-Trip Ckt.
K9 Starter Fault-Arming Ckt./S4 Timer De-energized Ckt./Automatic Purge Operation
K10 Start Pulse Signal/S4 Timer De-energized Ckt.
K11 Hi Motor Temp. Trip Ckt.
K12 Chilled Water Pump Starter
K13 Condenser Water Pump Starter
K14 Oil Pump (Manual Purge Ckt.)
K15 Oil Pump Starter Relay
K16 Electric Hot Gas Bypass Control Relay (Optional)
L1 Purge Solenoid
L3 Load Solenoid (Pneumatic Option)
L4 Unload Solenoid (Pneumatic Option)
M1 Hour Meter
M2 Start Counter
S HGBP Valve Actuator Limit Switch (Opt.)
S1 Hi Condenser Pressure Switch
S2 Low Refrig. Temp. Switch
S3 Start-Stop Chilled Water Demand Switch
S4 Anti-Recycle Timer
S5 Evaporator Flow Switch
S6 ON/OFF Switch
S7 Condenser Flow Switch
S8 Oil Pressure Switch
S9 Oil Pump Post-Lube Timer
S10 Oil Temp. (Heater) Switch
S11 Purge ON/OFF/AUTO Switch
S12 Guide Vane Linkage Limit Switch (HGBP Opt.)
S13 Purge Hi Pressure Switch
S14 Purge Timer
S15 Proof-of-Closure Switch (Pneumatic Opt.)
S22 Compressor Hi Discharge Temp. Switch (HGBP Opt.)
T1 Control Power Transformer
U1 Electronic Capacity Control Module
U3 Leaving Chilled Water Temp. Sensor
2U3 Return Chilled Water Temp. Sensor

NOTES:

1. UNLESS OTHERWISE NOTED ALL SWITCHES ARE SHOWN AT 25°C (77°F), AT ATMOSPHERIC PRESSURE AT SOX RELATIVE HUMIDITY, WITH ALL UTILITIES TURNED OFF, AND AFTER A NORMAL SHUTDOWN HAS OCCURRED.
2. DASHED LINES INDICATE RECOMMENDED FIELD WIRING BY OTHERS. PHANTOM LINES INDICATE ALTERNATE CIRCUITRY OR AVAILABLE SALES OPTIONS.
3. NUMBERS ALONG THE RIGHT SIDE OF THE SCHEMATIC DESIGNATE THE LOCATION OF THE CONTACTS BY LINE NUMBERS. AN UNDERLINED NUMBER INDICATES A NORMALLY CLOSED CONTACT.
4. MAXIMUM AMBIENT TEMPERATURE 50°C (120°F) AVERAGE AIR TEMPERATURE IN THE IMMEDIATE NEIGHBORHOOD OF THE CONTROL PANEL.
5. CIRCUIT BREAKERS CB1-CB5 EMPLOYED AS FAULT INDICATORS IN THE CONTROL CIRCUIT ARE DESIGNED TO BE SHUNT TRIP VOLTAGE DEVICES (120 VAC AT ±15%) NOT CURRENT SENSITIVE DEVICES AS NORMALLY APPLIED. AUX CONTACT ARE LOCATED ON LINE 56
6. ALL FIELD WIRING MUST BE IN ACCORDANCE WITH THE NATIONAL ELECTRICAL CODE (NEC), STATE AND LOCAL REQUIREMENTS, OTHER COUNTRIES APPLICABLE NATIONAL AND/OR LOCAL REQUIREMENTS SHALL APPLY. EXAMPLE: CANADA-SHALL COMPLY WITH CANADIAN STANDARDS ASSN. (CSA)
7. START-STOP SIGNAL TO K1 120 VOLTS 1.0 AMP INRUSH .5 AMP CONTINUOUS (MAX)
8. FOR TIMING SEQUENCE OF TIMERS S4 & S9 SEE TABLES
9. K4 CONTACT RATED AT 30 AMP INRUSH 6 AMP CONTINUOUS 120 VOLTS (MAX)

Electronic Capacity Control Module (U1) - This device modulates the inlet vane actuator (A3; Line 39) by balancing the CONTROL POINT knob setting against the leaving chilled water temperature sensed by the leaving chilled water temperature sensor (U3; Line 38).

The U1 module also serves as a load limiting device as a result of an input signal received from the electronic overload relay (A1); the circuit between the control power fuse (F1) and Terminal 84 (on U1) must be complete before the module can open the compressor inlet vanes.

Compressor Motor Hi-Temperature Cutout (U2) - The M1-M2 contacts of this device (found on Line 35) close shortly after 115-volt control power is provided to Terminals T1 and T2, and will remain closed unless the temperature of the compressor motor windings exceeds 265 ± 5 F. If the motor winding temperature exceeds this level, the M1-M2 contacts will open to shut down the machine; when the winding temperature drops to 235 F, these contacts will automatically reclose.

The motor temperature sensors B1R1, B1R2, and B1R3 are located on the ends of the motor windings at 2, 6, and 10 o'clock positions. These sensors are not replaceable.

Note: Be sure to refer to the legend provided when reviewing the electrical sequence of operation outlined in the paragraphs which follow.

With the chilled water pump starter (K12; Line 13) energized, and the unit ON/OFF switch (S6; Line 26) set at AUTO, 115-volt control power flows through the string of safety controls and safety lockout contacts (Line 16). If all of the safeties are satisfied, the SAFETIES SATISFIED indicator light (DS1; Line 20) illuminates.

Current then flows to the chilled water demand switch (S3; Line 26), whose temperature-sensing element is located in the return water entering the chiller. When the return water temperature rises above the control point, S3 closes; this illuminates the COOLING REQUIRED indicator light (DS2; Line 20) and "feeds" current to the anti-recycle timer contacts (S4; Line 26). If a minimum of 30 minutes has elapsed since the last compressor start, S4's contacts allow the current to pass; this causes the RESTART TIME ELAPSED indicator light (DS3; Line 26) to illuminate, and current flows to the compressor inlet vane actuator (A3). If the inlet vanes are closed and the compressor is off, current flows through the compressor inlet vane end switch and the contacts of relay K7 to Terminal 8. The CHILLED WATER flow indicator light (DS4; Line 20) will then light, provided that the evaporator flow switch (S5; Line 26) verifies chilled water flow.

Notice that positioning switch S6 (Line 26) at AUTO also allows current to energize the condenser pump control relay (K4; Line 19); K4's contacts (Line 16) then close, energizing the condenser water pump starter (K13). If condenser water flow is proven, current flows through condenser flow switch S7 (Line 26), illuminates the CONDENSER WATER flow indicator light (DS5; Line 20), and energizes relay K5 (Line 21). One set of normally-open K5 contacts (Line 43) closes to energize the oil pump timer (S9). After the 40-second timing period has elapsed, S9's contacts (Line 44) close and oil pump motor B2 (Line 45) energizes.

The oil pump utilizes a capacitor-start/induction-run, single-phase motor; its current-sensitive starter relay (K15; Line 45) is wired in series with the pump motor's run winding, allowing it to switch from start to run. When the oil pump motor first starts, it draws locked rotor current; this high current draw causes relay K15 to close its contacts (Line 45). The start capacitor then energizes, and the motor start winding begins its rotation. Once the motor is fully accelerated, the current draw falls, causing K15's contacts (Line 45) to open and drop out of the start winding. The oil pump motor is now in its run configuration.

Once proper oil pressure is established, oil pressure switch S8 (Line 26) closes and the OIL PUMP indicator light (Line 22) illuminates. Relay K6 (Line 23) then energizes, and one set of its single-pole/double-throw contacts (Lines 14 and 15) switch to energize the low oil pressure arming circuit (K3; Line 14). (This occurs when K3's contacts--in Line 16--subsequently close to energize low oil pressure fault indicator CB1.)

A second set of normally-open K6 contacts (Line 34) closes to energize the anti-recycle timer (S4). Within 25 seconds, the S4 contacts in Line 33 close, while another set of S4 contacts in Line 28 closes 20 seconds later. With S4's contacts closed, the SYSTEM operating indicator light (DS7; Line 28) illuminates and relay K9 (Line 26) energizes. A compressor start is then initiated when compressor motor starter relay K1 energizes; one set of K1 "start" contacts (Line 29) closes to maintain power to the compressor starter, while a second set of "start" contacts (Line 34) closes to energize the start pulse signal relay (K10).

Notice that one set of single-pole/double-throw K10 contacts (Lines 32 and 34) switch immediately to ensure the the K10 relay remains energized for the duration of anti-recycle timer S4's timing period. Another normally-closed set of K10 contacts (Line 29) opens to interrupt the "start" signal to the compressor motor through the S4 contacts in Line 26. **Note:** The original "start" signal sent through the S4 contacts in Line 26 is maintained just long enough to energize the "start" contactor of compressor motor starter K1. If K1 drops out of the circuit for any reason, it will remain de-energized until the anti-recycle timer (S4) completes its timing cycle.)

An additional set of normally-open K1 "start" contacts (Line 45) closes to ensure that the oil pump is energized as long as K1's contacts are closed.

When compressor motor starter K1 "converts" the compressor to the run configuration, K1's normally-open "run" contacts (Line 40) close to supply power to Terminal 84 of the capacity control module (U1). (However, the low refrigerant temperature switch (S2) must be closed for this to occur.) Control module U1 then opens the compressor inlet vanes as needed.

Remember that the "starter fault" safety circuit was armed at the same time that compressor motor starter K1--along with relay K9--was initially energized; a set of normally-closed K9 contacts in Line 25 opened to ensure that relay K8 (i.e., starter fault tripping circuit) remained de-energized. At that point, S4 contacts in Line 26 switched from 13-81 to 13-79 to energize relay K7 (Line 24). Normally-closed K7 contacts in Line 25 then closed, allowing relay K7 to remain energized and completing the arming of the "starter fault" circuit. If compressor motor starter K1 drops out of the circuit for any reason, the K1 contacts in Line 29 will open and relay K9 will de-energize. K9's normally-closed contacts (Line 25) will then reclose to energize the starter fault tripping circuit relay (K8) and cause its normally-open contacts (K8; Line 15) to close. This action trips the starter fault indicator (CB5) and locks the unit off.

When there is no longer a call for cooling--or if a safety opens, compressor starter K1 and relay K5 (i.e., oil pump timer/jump-out start inhibit circuit) are de-energized. A set of S9 contacts (Line 44) ensures that the oil pump timer (S9) and oil pump motor (B2) remain energized for three minutes to provide lubrication during compressor coast-down.

If there is a loss of oil pressure while the compressor is running, oil pressure switch (S8; Line 26) opens; this stops the compressor and de-energizes relay K6 (oil pressure arming circuit/start S4 timer motor; Line 23). Current is then routed from Terminal 12 (Line 26), through the K3 contacts in Line 16 and the normally-closed K6 contacts in Line 14. This trips the low oil pressure fault indicator (CB1), and the compressor is locked out.

Note: Alarm contacts (Line 56) for field connection are factory-wired using a set of auxiliary, normally-closed contacts on each of the control safety lockouts.

Control Options: Pneumatic Capacity Control System

In this control scheme, an analog (proportional) signal from a conventional pneumatic temperature controller (also optional) is fed into the pilot port (labelled "P" in Figure 14) of the pneumatic inlet vane actuator's pilot positioner. Notice that a jumper between Terminals TS1 and TS2 on the capacity control module (U1) is substituted for the electronic leaving chilled water sensor (U3) used in the electronic control scheme described in the preceding section.

When the compressor motor starter assumes the "run" configuration, K1's interlocking contacts close; the continuous circuit between TS1 and TS2 causes the module to transmit a repeated, pulsed loading signal to solenoid valve L3. Unlike the electronic capacity control system, the duration of this pulse is solely the function of motor current in terms of its relationship to the % CURRENT setting of the current limiter. The preselected 10 to 310-second time lapse is observed between successive load pulses.

During the load pulse, the normally-closed (NC) port of solenoid valve L3 opens, permitting the output air pressure from the pilot positioner to be transmitted through the normally-open (NO) and common (C) ports of solenoid valve L4 to the vane actuator. Within the time interval of the load pulse, the pneumatic temperature controller has the authority to open, close or hold the vane position.

Figure 14
CVHE Pneumatic Control Interface

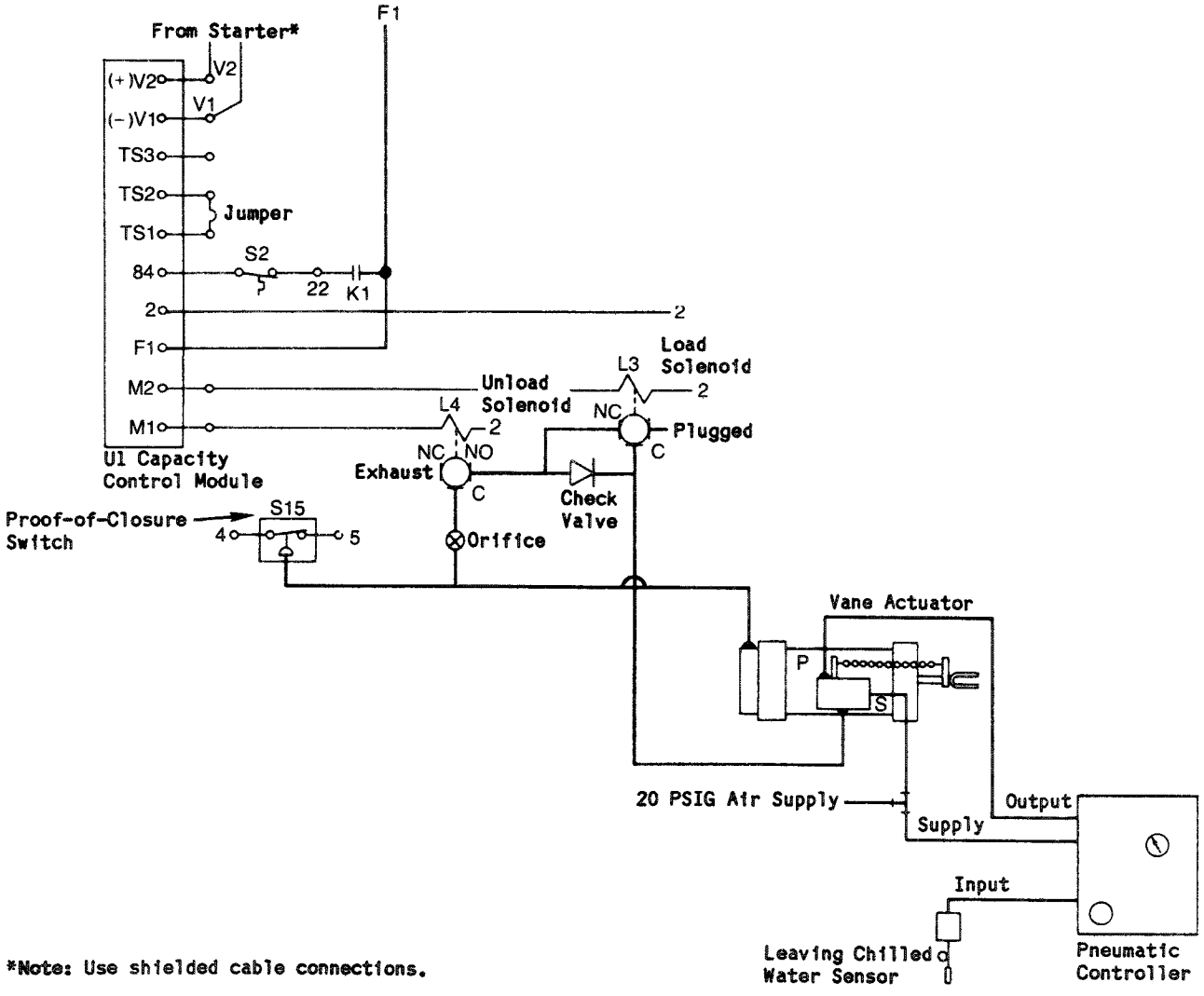

*Note: Use shielded cable connections.

When the system is shut down, opening the K1 contacts--or a low refrigerant temperature condition opens switch S2--control module U1 transmits a continuous unloading signal. This signal closes the normally-open (and opens the normally-closed) ports of valve L4 to exhaust the control air pressure from the actuator and close the vanes.

Load limiting within the pneumatic control system is handled in the same manner as the electronic control scheme: as motor current rises, the duration of the loading pulse decreases. At 100 percent of the % CURRENT setting, the pulse duration drops from 0.25 seconds to zero. At 103 percent, a 0.25-second unloading pulse is initiated, followed by a 10 to 310-second load-delay period; this represents an attempt to return the chiller to 100 percent of the demand limiter setting. Finally, at 105 percent, a continuous unloading pulse is established and is terminated only when the motor current is reduced to 95 percent of the demand limit setting. (Refer to Figure 14; a pressure-relief check valve is connected to the normally-open port of L4 to allow the unit to unload when motor current is between 100 and 103 percent of the % CURRENT setting and the chilled water set-point has been reached. This check valve also enables the pneumatic control to reduce the branch pressure on the actuator when the unit is under current limit and the chilled water setpoint has been reached.)

Notice that control air is supplied to--and exhausted from--the vane actuator through an orifice. This orifice is factory-adjusted to produce the same vane movement rate as that produced by the actuator used in the electronic capacity control system.

Finally, proof-of-closure switch S15, which closes on a drop in pressure, replaces and performs the same function as the end switch of the electric inlet vane actuator (A3; Figure 13 - Line 26).

The remaining circuitry of the pneumatic capacity control system is the same as that used in the electronic control scheme.

Control Options: Sequence Panel

Note: When reviewing the following operational sequence, be sure to refer to the appropriate wiring diagram in the wiring booklet which shipped with the unit. For more comprehensive installation and application information, refer to the submittal information which shipped with the panel.

To ensure that the system operates properly when power is applied, several adjustments must be made to the sequence panel and to the unit controls.

1. On the sequence panel:

a. Select the desired unit operating sequence, and set the sequence switch accordingly.

b. Use the knobs located on the mounting plate within the panel to set the load and unload thresholds.

   Set the load threshold to the percentage of maximum load desired on the lead unit before the lag unit starts; a setting of 90 percent is recommended.

   Set the unload threshold to that percentage of minimum load required with both units operating before the lag unit shuts down. To prevent cycling at this transition point, the setting must be less than half of the load setting; a setting of 40 percent is recommended. As a part of set-up, determine what the minimum current threshold is before adjusting the minimum set-point to insure that the motor will go to 40%.

2. Adjust the controls of the lead (A) and lag (B) units. The power switches (labelled AUTO/OFF on the control panel of each unit) should be set at AUTO, and the temperature control adjustments should be set to the same desired control temperature.

Make sure that the knobs on the temperature controls are properly adjusted. The pointer of each should be aligned with the calibration mark on the dial when in the fully counterclockwise position.

In addition, adjust the current limit potentiometers to the fully clockwise position.

These are the only adjustments required for the successful operation of the system.

When control power is applied to a pair of chillers (piped in parallel) utilizing the sequence panel control option, the operational characteristics of the system are the same as those described in the previous sections. Start-up is controlled by the sequence panel OFF/ON switch; refer to Figure 15 for an illustration of the sequence panel and possible panel applications. When the system switch is positioned at ON, its contacts close to the lead unit, and pilot light No. 1 illuminates. If all of the start sequence circuit interlocks are verified, the lead unit will start.

If the current draw of the lead unit exceeds the setting on the load selector, a 15-minute timer energizes. Once the timing cycle is complete, the second (or lag) unit starts and pilot light No. 2 illuminates. At this point, the lead unit begins to unload and the lag unit loads up. After a period of adjustment, the units stabilize, with each carrying half of the cooling load; any further change in cooling demand will be shared equally.

In some applications, the sequence panel is used in conjunction with a pair of chillers piped in series with one chilled water pump; this changes the master/slave control scheme. When both units are on, the "B" (or lag) unit always operates with its temperature control in its current limit mode (i.e., the yellow light is on); its loading, however, tracks that of the "A" (or lead) unit. If the load decreases, the lag unit will shut down 15 minutes after reaching the setting on the unload selector. The remaining unit adjusts to carry the load.

Should it become necessary to run either or both chillers independently from the sequence panel, adjust the OFF/ON system switch on the sequence panel to the OFF position. Then, when the sequence panel's AUTO/MANUAL switch is set at MANUAL, the units will operate in response to their individual control adjustments.

Note: The sequence panel pilot lights indicate a call for the units' operation; they do NOT confirm unit operation.

Figure 15
Optional Sequence Panel

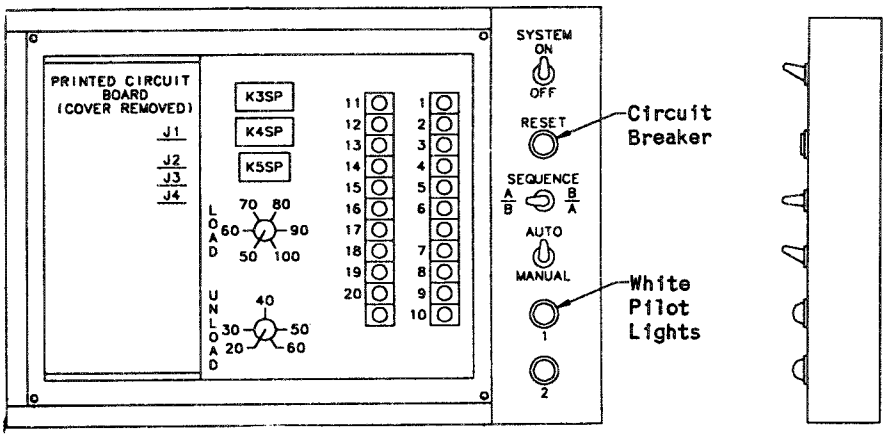

Front View (Shown w/Cover Removed)

Side View

Control Configurations: Sequence System w/Two Units

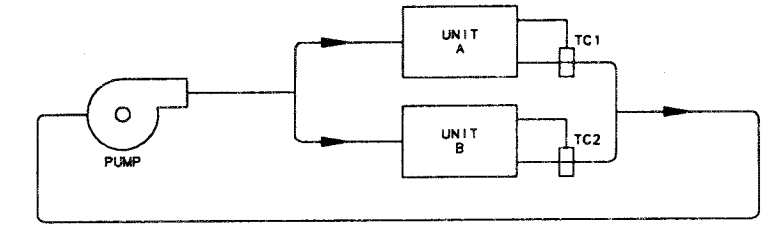

Parallel 1 Pump

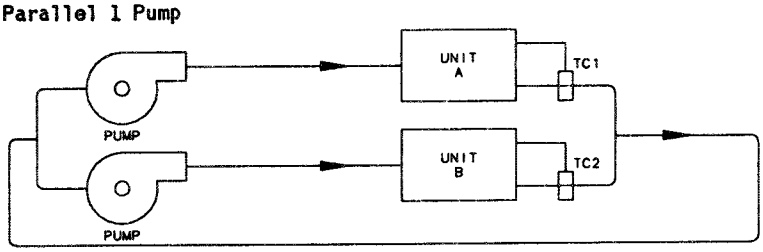

Parallel 2 Pumps

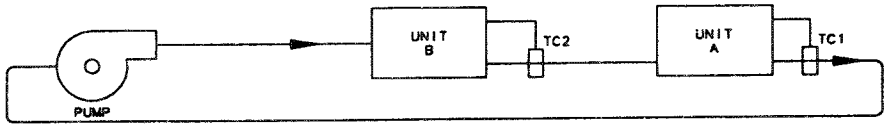

Series

Control Options: Free-Cooling

Free-Cooling, an accessory to CVHE CenTraVacs, adapts the basic chiller so it may function as a simple heat exchanger using refrigerant as the working fluid; however, it does not provide control of the leaving chilled water temperature. When condenser water is available at temperatures lower than the desired chilled liquid temperature, the free-cooling option can provide substantial nominal chiller capacity without operating the compressor, resulting in substantial energy cost savings.

The principle behind the free-cooling option is that refrigerant flows to the area of lowest temperature in the system. When condenser water is available at a temperature lower than the required leaving chilled water temperature, the operator manually stops the compressor and starts the free-cooling cycle by pressing a push button control located in the lower right-hand corner of the unit control panel. See Figure 16. Changeover from the free-cooling cycle to mechanical cooling is accomplished by pressing this same button.

To equip the chiller with the free-cooling option, several components are factory-installed or -supplied: a refrigerant gas line (including an electrically-actuated shutoff valve) installed between the evaporator and condenser; a valved liquid return line (including an electrically-activated shutoff valve) between the condenser sump and the evaporator; a liquid refrigerant storage vessel; additional refrigerant charge; and, a free-cooling selector switch (located on the unit control panel).

When the chiller operator initiates the changeover to the free-cooling cycle, the shutoff valves in the liquid and gas lines open, and a lockout circuit prevents the compressor from energizing. Liquid refrigerant then drains--by gravity--from the storage tank into the evaporator and floods the tube bundle. Since the temperature and pressure of the refrigerant in the evaporator are higher than in the condenser because of the difference in water temperature, the refrigerant in the evaporator vaporizes and flows to the condenser. This gaseous refrigerant then condenses as a result of the effects of the cooling tower water, and flows--again, by gravity--back to the evaporator. Refer to Figure 17 for an illustration of the free-cooling cycle.

The automatic refrigeration cycle described above is sustained as long as a temperature differential exists between the condenser and evaporator liquids. The cooling capacity provided by the free-cooling cycle is determined by the difference in temperature between the evaporator water and the condenser water which, in turn, determines the rate of refrigerant flow between the two shells.

If the system load exceeds the available free-cooling capacity, the operator must manually initiate changeover to the mechanical cooling mode by pressing the free-cooling switch on the unit control panel. The gas and liquid line valves then close and compressor operation begins. Refrigerant gas is drawn out of the evaporator by the compressor, and is then compressed and discharged to the condenser. Most of the condensed refrigerant initially follows the path of least resistance by flowing into the

Figure 16
CVHE Unit Control Panel w/Free-Cooling Option

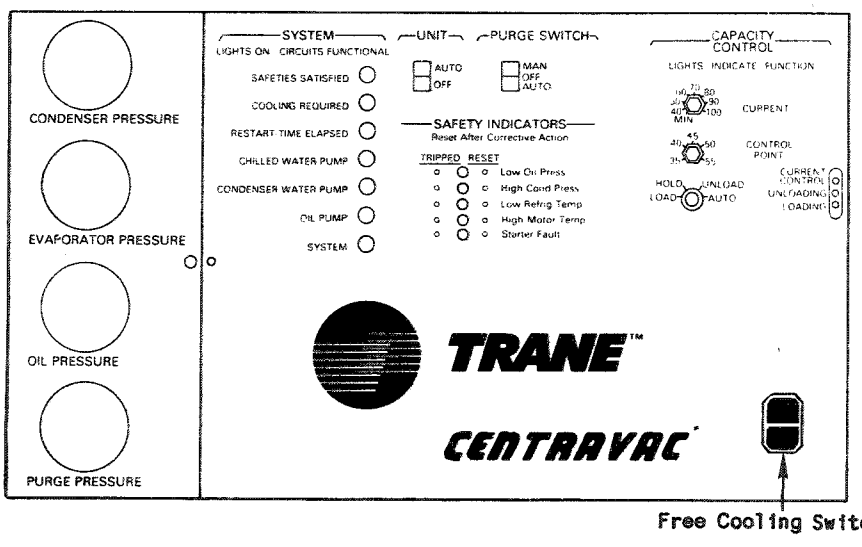

storage tank. The storage tank is vented to the economizer sump through a small bleed line; when the storage tank is full, liquid refrigerant must flow through the bleed line restriction.

Because the pressure drop through the bleed line is greater than that of the orifice flow control device, the liquid refrigerant flows normally from the condenser through the orifice system and into the economizer.

Note: During the changeover from free-cooling to mechanical cooling, the refrigerant transfer process is completed within three minutes. The loading ramp prevents carry-over by loading the machine slowly.

Control Options: Hot Gas Bypass

The hot gas bypass (i.e., HGBP) control system is designed to minimize machine cycling by allowing the CVHE unit control system to operate stably under minimum load conditions. In these situations, the guide vanes are locked at a preset minimum point and the unit capacity control function is performed by the HGBP valve positioner. Circuits are also provided to allow both the guide vanes and the HGBP valve to close for unit shutdown.

There are four control components associated with the hot gas bypass option:

1. Relay K16: This control device is located in the unit control panel (or mounted in a separate box for retrofit applications), and enables the closure of the HGBP valve and guide vanes at unit shutdown.

2. Switch S12: This single-pole/double-throw limit switch is mounted on the guide vane linkage, and operates when the vanes pass through a particular minimum setting.

3. Switch S: Mounted in the HGBP valve actuator, this single-pole/double- throw limit switch operates when the valve just begins to open. Notice that the "close" limit switch mounted in the valve actuator must be set to operate just after (i.e., valve more closed) Switch S operates.

4. Switch S22: This device is designed to shut the unit down if the discharge temperature exceeds 210 F, thereby preventing the unit from running at extremely low loads for extended periods of time.

Note: When reviewing the sequence of operation provided below, be sure to refer to the hot gas bypass schematic and connection diagrams included in the wiring booklet which shipped with the chiller.

At unit start-up, the HGBP control relay (K16) energizes, and load signals from M2 flow to the "open" terminal of the vane actuator. When the vanes open past the preset minimum operating point, the contacts of limit switch S12 switch so that any unload signals from M1 are routed to the vane actuator. From this point, the unit will load and unload normally throughout the range of guide vane positions. (If the vanes do not open past the preset minimum operating point, however, the unit will remain on inlet guide vane control only.)

Figure 17
Free-Cooling Operation
Vs. Compressor Operatio

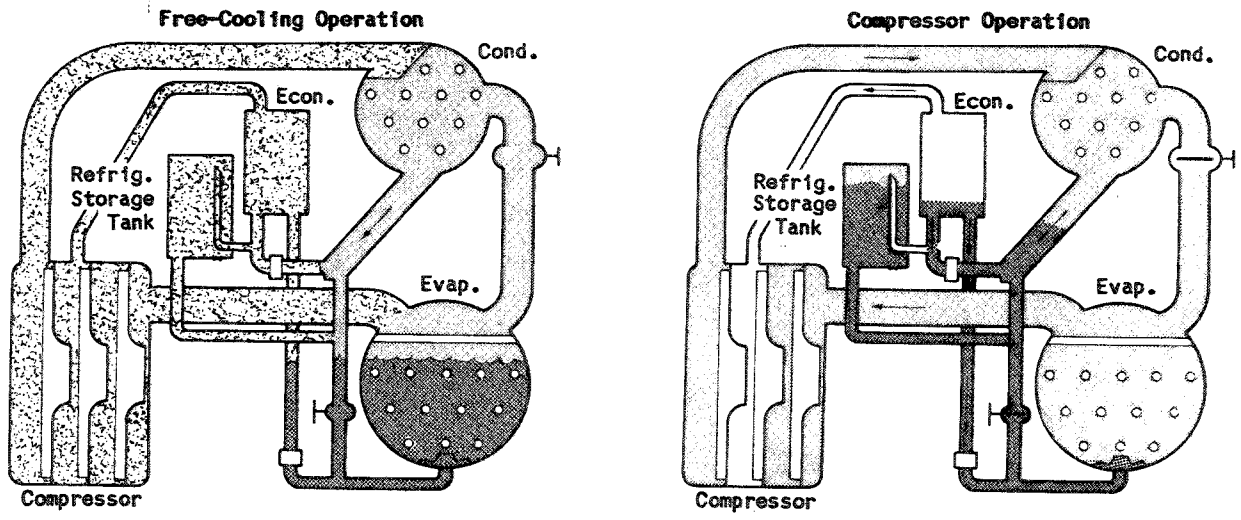

Table 1
Demand-Limit Interface: Input vs. Current

Potentiometer Input	Maximum Current
0 Ohms	100%
200 Ohms	88%
400 Ohms	76%
600 Ohms	64%
800 Ohms	52%
1000 Ohms	40%

When the unit unloads and the guide vanes reach a preset minimum point, Switch S12 energizes and passes unload signals from M1 to the "open" terminal of the HGBP valve actuator. When the HGBP valve opens, Switch S energizes and passes load signals from M2 to the "close" terminal of the HGBP valve actuator. Unit capacity is then controlled by the HGBP valve actuator with the guide vanes held at the minimum position. When the unit again loads, the HGBP valve closes; once it reaches the full-closed position, Switch S energizes and sends additional load signals to the vane actuator.

At unit shutdown, HGBP control relay K16 is de-energized and the unload signal from M1 passes through the normally-closed contacts of K16 to the "close" terminals of the vane and HGBP valve actuators. This operation prepares the unit for restart.

Note: Be sure to contact a qualified service organization for proper adjustment of the HGBP valve actuator limit switches.

Control Options: Demand-Limit Interface

The demand-limit interface control option--whether factory- or field-installed on the unit control panel--is designed to enable the chiller to be demand-limited from an external source. Once the demand-limit module is installed, the CVHE control system can accept a 0 to 1000-ohm potentiometer input (or equivalent). This resistive input limits the maximum current that the compressor motor can draw. Refer to Table 1 to determine the relationship between the potentiometer inputs and the resulting maximum current values. Notice that as the maximum allowable current is decreased, the capacity controller decreases the inlet guide vane opening in an attempt to meet the maximum limit. Current draw with fully closed inlet guide vanes may range from 60 to 30 percent of the rated load amps (RLA), depending on the individual machine amd the operating conditions. Once the vanes are fully closed, any additional signals input to further limit the maximum current will have no effect.

To demonstrate chiller operation during demand-limiting, let's look at the example provided below:

A CVHE unit is drawing 60 percent current, and a 200-ohm potentiometer signal is inputted into the control system. This 200-ohm signal sets the maximum current draw at 88 percent; see Table 1. Since the actual current draw of 60 percent is less than the maximum allowable current draw of 88 percent, the unit will not respond with a capacity reduction at this time.

However, if the load current tries to rise above the maximum allowable current (i.e., 88 percent), demand-limiting will occur. The inlet guide vanes will modulate closed until the actual current draw equals the maximum current allowable.

If the maximum allowable current setting is raised, the inlet guide vanes open slowly, stopping at a position that corresponds to some current draw below the ceiling level.

Note: Make sure that the demand limiter dial on the front of the unit control panel is set at 100 percent. Any demand-limiting initiated with this dial is superimposed onto the external demand-limiting signal (e.g., a dial setting of 75 percent plus a 200-ohm potentiometer input yields a maximum allowable current of 62 percent).

Note: Demand-limiting a centrifugal chiller may cause the machine to temporarily operate in an unstable mode that produces refrigerant gas noise. Since job site conditions vary greatly, it is recommended that the rate of demand-limiting--as well as the maximum amount of demand-limiting--be determined on the job site at start-up.

Control Options: Chilled Water Reset Interface

Note: This control option is not compatible with the unit pneumatic capacity control system.

The chilled water reset interface option consists of a control module which is factory- or field-installed on the outside of the unit control panel. When connected to a remote signal device (i.e., field-supplied and -installed), the interface control module will linearly reset the leaving chilled water control point to a maximum of 10 F above the unit control panel setting. (The reset interface control module is designed to accept signals of 0 to 10 VDC, 4 to 20 maDC, or 0 to 1000 ohms.)

Control Options: Chilled Water Reset

Note: This control option is not compatible with the unit pneumatic capacity control system.

Chilled water reset is designed for those applications where the system operates at part load, and does not require design chilled water temperature

at part load. In these cases, the leaving chilled water temperature setpoint can be reset upward using the chilled water reset option.

Using an additional temperature sensor field-installed in the return chilled water piping, the chilled water reset control option enables the capacity control module to sense the cooling load on the chiller. **Note:** Be sure to select the proper sensor, depending upon the full-load delta "T". As the unit unloads, the control module will raise the leaving water temperature according to one of three available ratios; refer to Figure 18. Each of the reset ratios is defined as the change in entering water temperature vs. the change in leaving water temperature. To select the desired reset ratio, adjust the "dip" switches located on the capacity control module found within the unit control panel. See Figure 18.

Once the proper reset ratio has been selected, the chilled water reset option operates automatically, raising the leaving water temperature as the cooling load decreases. No further adjustment or maintenance is required.

Note: The chilled water reset control can be enabled or disabled with the addition of a single, field-supplied, mercury-wetted relay. By short-circuiting the two wires that connect the sensor to the control panel, the capacity control module overrides the reset signal and returns to the control panel setpoint.

Figure 18
Capacity Control Module
Dip Switch Adjustment
for Chilled Water Reset Option

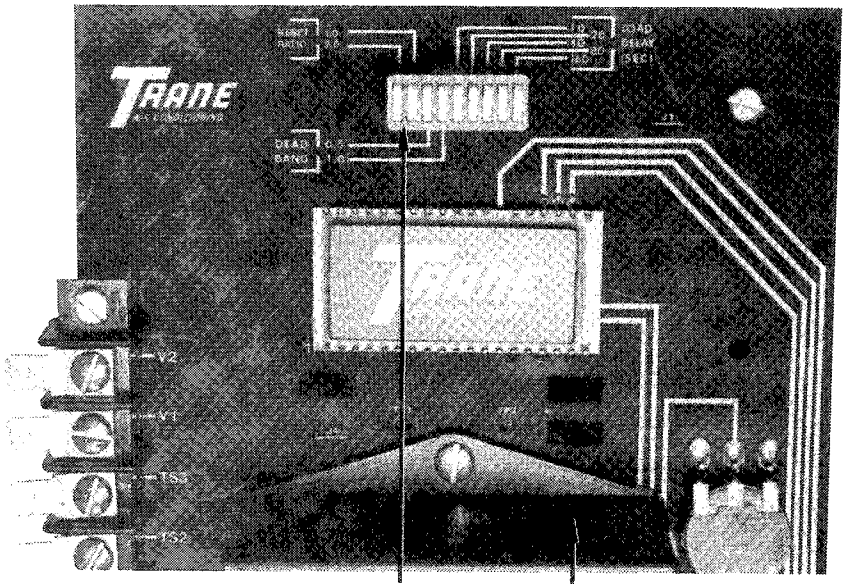

Reset Ration	Dip Switch #1	Dip Switch #2
None	Off	Off
1/2 : 1	On	Off
1 : 1	Off	On
2 : 1	On	On

Notes:
1. These ratios represent the change in entering water temperature vs. the change in leaving water temperature.
2. The actual amount of temperature reset is dependent on 4 parameters: sensor "range", design delta-T, reset ratio, and cooling load.

Automatic Condenser Cleaning System Electrical Sequence of Operation

Before a cycle is initiated, the normal flow light is on as shown in the electrical schematic (Figure 19).

Contact MTR of the 24 HR time control closes at preset times during the day, energizing the single shot timer 1TR. The 1TR contact will close for approximately 30 seconds, energizing the 4-way solenoid valve SOL.

Energizing SOL will reverse the air to the flow diverter actuator (double acting cylinder) causing the flow diverter to move from normal to reverse position. Once the flow diverter plug moves from the normal position, the 2CS contacts (switch A) of the valve position indicator close, turning off the "Normal Flow" light and closing the circuit to the incomplete sequence on-delay relay 2TR, starting the timer.

When the plug reaches the reverse position, the 1CS contacts (switch B of the valve position indicator switch) close, turning the "Reverse Flow" light on and advancing the counter one half count. The circuit to 2TR is opened, resetting it to zero.

After 1TR times out (approximately 30 seconds), it will de-energize, opening the 1TR contact and de-energizing SOL. SOL de-energizing will cause the air to the flow diverter actuator to reverse, and the opposite action just described will occur. The "Reverse Flow" light will go out and the cycle counter will advance another one-half count making one full count. At this point the normal flow light will illuminate.

If diverter transfer time exceeds the time set at the 2TR timer, 2TR will time out and close contacts illuminating the "Incomplete Sequence Alarm". To reset 2TR and turn the "Incomplete Sequence Alarm" light off, push "Alarm Reset". The flow diverter must be in the "Normal" or "Reverse" position to reset.

Figure 19
Automatic Condenser Cleaning System (Option) Electrical Schematic

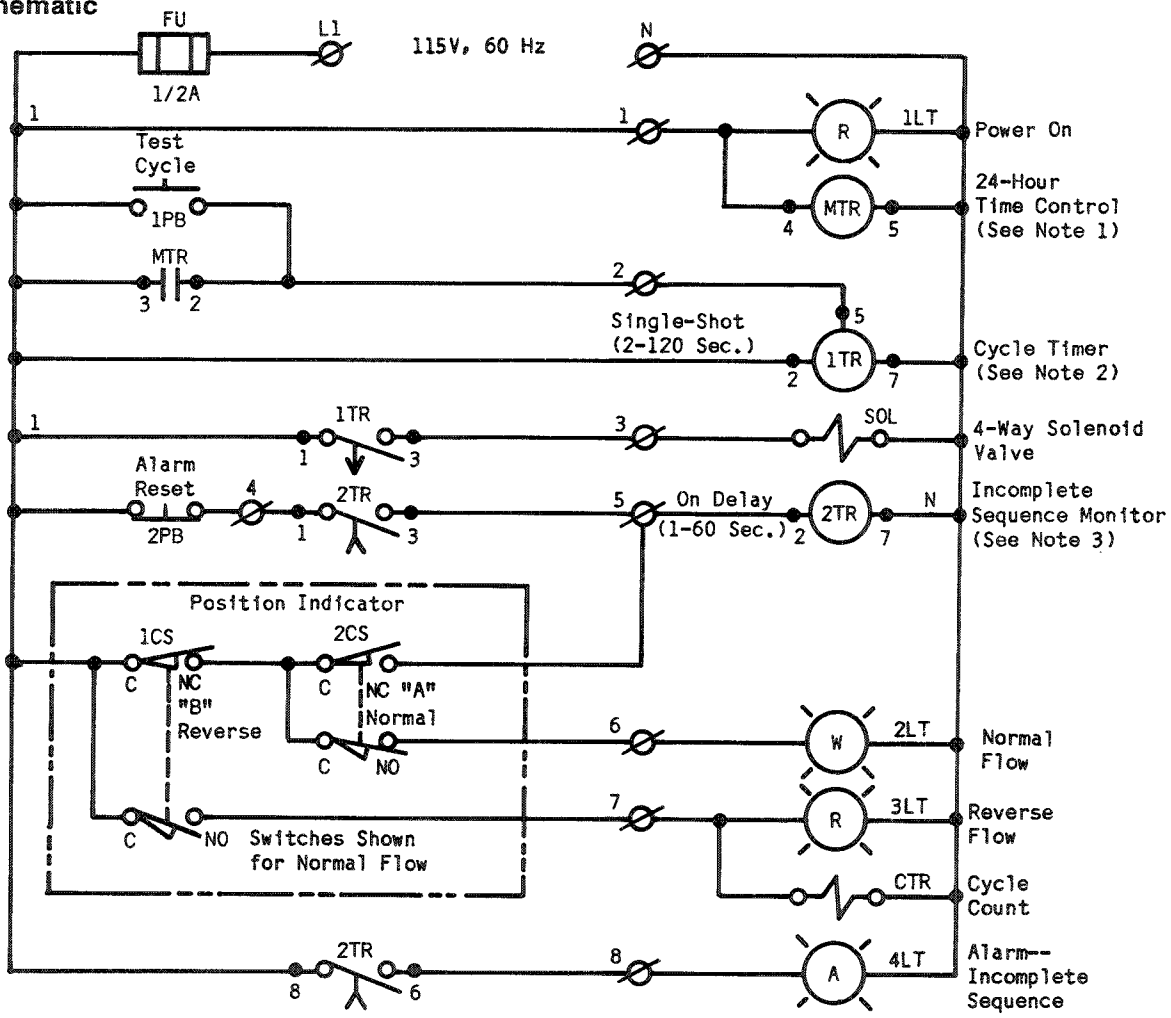

Notes:
1. Turn outer dial clockwise until white pointer lines up with time of day. Depress one tripper at the time of day each cleaning cycle is desired.
2. Set 1TR to 30 seconds.
3. Adjust time on 2TR to actual valve transfer time + 3 sec.
4. O = Terminal block connections.

WARNING
DISCONNECT ELECTRICAL POWER SOURCE TO PREVENT INJURY OR DEATH FROM ELECTRICAL SHOCK

CAUTION
Use copper conductors only to prevent equipment damage

Unit Start-Up /Shutdown Procedures

Daily Unit Start-Up

1. Check the oil tank oil level; the level must be visible in--or above--the lower sight glass. Also, be sure to check the oil tank temperature; normal oil tank temperature before start-up is 140 ± 5 F.

2. Adjust the unit AUTO/OFF switch to the OFF position.

3. Check for chilled water and condenser water flow.

4. If necessary, readjust the current limit control (labelled % CURRENT) to the desired position.

5. Check the position of the function control switch; it should be set at AUTO.

6. If necessary, readjust the chilled water temperature control (labelled CONTROL POINT) to the desired temperature.

7. Verify that the safety indicators are in the reset position. If any have tripped, be sure to diagnose and correct the cause of the trip-out.

8. Recheck the oil temperature; once it reaches 140 ± 5 F, start the unit by adjusting the unit switch to the ON position.

Daily Unit Shutdown

1. Adjust the unit switch to the OFF position.

2. Shut down the chilled water pump if chilled water service is no longer required.

Seasonal Unit Start-Up

1. Close all drain valves, and reinstall the drain plugs in the evaporator and condenser headers.

2. Service the auxiliary equipment according to the start-up/maintenance instructions provided by the respective equipment manufacturers.

3. Chiller Sizes 036 thru 125 Only: Open the manual valves in the oil cooler water circuit.

4. Vent and fill the cooling tower, if used, as well as the condenser and piping.

Caution: If the chiller is equipped with the automatic condenser cleaning system, take care when filling the condenser to prevent any sudden surge of water which may damage the retainer baskets and brushes. Action of the flow diverter should also be disabled at this time.

At this point, all air must be removed from the system (including each pass). Then install the vent plugs in the condenser water boxes.

5. Close the city water valves to the purge condenser.

6. Open all of the valves in the evaporator and purge condenser chilled water circuits.

7. If the evaporator was previously drained, vent and fill the evaporator and chilled water circuit. When all air is removed from the system (including each pass), install the vent plugs in the evaporator water boxes.

8. Lubricate the external vane control linkage.

9. Check the refrigerant in the unit; to do this, the refrigerant must be drawn off and weighed back into the chiller. (If the unit is low on charge, be sure to contact a qualified service organization.)

10. Check the adjustment and operation of each safety and operating control.

11. Close all disconnect switches.

WARNING: Use care when measurements, adjustments, or other service-related operations must be made with the power on to prevent injury or death due to electrical shock or contact with moving parts.

12. Start the purge system.

13. Verify that each of the safety indicators on the unit control panel is in the reset position.

14. Check the oil tank level; the level must be visible in the lower sight glass. Also, be sure to check the oil tank temperature; normal oil tank temperature before start-up is 140 ± 5 F.

15. Verify that the unit AUTO/OFF switch is positioned at OFF; then energize the water pumps. Check for chilled water and condenser water flow.

16. If necessary, set the current limit control (labelled % CURRENT) at its minimum setting.

17. Check the position of the function control switch; it should be set at AUTO.

18. If necessary, adjust the chilled water temperature control (labelled CONTROL POINT) to the desired temperature.

19. Recheck the oil temperature; once it reaches 140 ± 5 F, start the unit by adjusting the unit switch to the ON position.

The system should now operate automatically.

Seasonal Unit Shutdown

1. Stop the system at the chilled water push button station, or stop the chilled water flow by the means devised for this particular application.

2. Open all disconnect switches except the control power disconnect switch.

WARNING: Use care when measurements, adjustments or other service-related operations must be made with the power on to prevent injury or death due to electrical shock or contact with moving parts.

Caution: The control power disconnect MUST remain closed during the entire shutdown period to allow oil sump and separator (if applicable) heater operation. This will prevent refrigerant from condensing in the oil sump.

Caution: During a shutdown of more than 1 or 2 days, the optional automatic condenser cleaning system should be cycled at least once a day. This will prevent any diverter binding problems and possible unit damage.

3. Drain the condenser piping and cooling tower, if used.

4. Remove the drain and vent plugs from the condenser headers to drain the condenser.

5. If the system will be subjected to freezing temperatures, vent and drain the evaporator, oil cooler, and all connecting piping.

6. Once the unit is secured for winter, perform the maintenance procedures described in the "Annual Maintenance" section of this manual.

Note: During shutdown, be sure to operate the purge unit for a 30-minute period every two weeks. This will prevent the accumulation of air and noncondensibles in the machine. To start the purge, position the water valves to circulate city water through the purge condenser; then adjust the purge switch to the manual (MAN) position.

Periodic Maintenance

This section describes basic chiller preventive maintenance procedures, as well as the recommended intervals for the performance of these procedures. Remember that a periodic maintenance program is important to obtain the best possible performance and efficiency from the CenTraVac chiller. Proper maintenance also assures that minor problems are detected and resolved before they become major.

An important aspect of the chiller maintenance program is the regular completion of the CenTraVac Operating Log; refer to the last page of this manual for an example of this log. When filled out accurately by the operator, the completed logs can be reviewed to identify any developing trends in the chiller's operating conditions. If, for example, a gradual increase in condensing pressure is noted during a month's time, the operator can systematically check–then correct–the possible causes of this condition (e.g., fouled condenser tubes, noncondensibles in the system, etc.).

Daily Maintenance and Checks

1. Check the chiller's evaporator, condenser and purge drum pressure, oil sump temperature, and net oil pressure. Compare the readings obtained with the values provided in Table 2.

2. Check the oil level in the chiller oil sump using the two sight glasses provided in the oil sump head. When the unit is operating, the oil level should be visible in the lower sight glass.

Weekly Maintenance

Check the purge drum sight glass for evidence of condensate. (Water condensed in the purge drum floats on the surface of the liquid refrigerant, creating a visible line of separation in the sight glass.)

To remove water from the drum, operate the purge compressor until a positive pressure of 5 to 10 psig is indicated on the purge drum pressure gauge. Then, shut down the purge compressor and open the manual blow-off valve (located on the water connection end of the drum) to release the water and other noncondensibles.

Caution: If frequent purging is required, identify and correct the source of the air or water leak as soon as possible. Moisture contamination caused by leakage can shorten the life expectancy of the machine.

Note: If the unit is operating in the cooling mode, close the manual shutoff valves on the heating condenser and open the valves on the cooling condenser. Reverse this procedure when the unit is operating in the heat-recovery mode. Be sure to purge only from the active condenser.

Table 2
Normal Chiller Operating Characteristics

Operating Characteristic	Normal Reading
Evaporator Pressure	12 to 18" w.c. Hg (vacuum)
Condenser Pressure[1]	2 to 12 psig
Purge Drum Pressure	0 to 22 psig
Oil Sump Temperature:	
Unit Not Running	140 to 145 F
Unit Running	115 to 150 F
Net Oil Pressure[2]	18 to 20 psid

Notes:
1. Condenser pressure is dependent upon the temperature of the condensing water, and should equal the saturation pressure of R-11 at a temperature 5 to 10 F above that of the leaving condenser water at full load.
2. Net oil pressure (i.e., usable oil pressure) is determined by subtracting the oil sump pressure (i.e., evaporator pressure) from the oil pressure gauge reading.
Example: Oil Pressure Gauge = 10 psig, and the evaporator pressure = 18" Hg (vacuum). First, convert 18" Hg to psig (i.e., -18/2.03 = -8.87 psig).

Then, subtract -8.87 psig from 10 psig (i.e., 10 - (-8.87) = 10 + 8.87 = 18.87 psid). In this example, the net oil pressure of 18.87 psid is within the acceptable limits.

If your chiller is equipped with the factory-installed automatic condenser cleaning system, refer to the following weekly maintenance checks:

[ ] The movement of the diverter valve should be observed (the diverter pointer should rotate 90 degrees between "N" and "S"). Proper movement of the valve should insure that the control and air systems are functioning properly and that the correct transfer time is set.

[ ] Inspect the diverter packing during cycling to insure that no water leakage occurs.

[ ] Insure that the proper air pressure is maintained (70 - 100 psig).

[ ] Check cycle counter to insure that the proper number of cycles are registered.

Every Three Months

WARNING: Open and lock the unit disconnect to prevent injury or death due to electrical shock or contact with moving parts.

1. Clean all water strainers in the CenTraVac water piping system.

2. Complete all recommended daily and weekly maintenance procedures. (Refer to the previous sections for details.)

If your chiller is equipped with the optional automatic condenser cleaning system lubricate the diverter journal bearings through the grease fittings provided at both the front (actuator end) and rear journal bearings. Use Keystone Nevastane medium grease or equivalent.

Every Six Months

WARNING: Open and lock the unit disconnect to prevent injury or death due to electrical shock or contact with moving parts.

1. Lubricate the vane control linkage bearings, ball joints, and pivot points; a few drops of light machine oil (e.g., SAE-20) is sufficient. Also, apply one or two drops of oil on the vane operator shaft and spread it into a very light film; this will protect the shaft from moisture and rust.

2. Lubricate the actuator motor bearings by inserting a long nozzle into the lubrication ports on the actuator. See Figure 20. Several drops of SAE-20 oil, or equivalent, is sufficient.

Off-Season Maintenance

During those periods of time when the chiller is not being operated, be sure to operate the purge unit for a 30-minute period every two weeks. This will prevent the accumulation of air and noncondensibles in the machine. Since the machine is not providing chilled water, cool water (i.e., less than 80 F) must be supplied to the purge condenser drum by adjusting the water valves to provide alternate water flow through the purge condenser.

Caution: If frequent purging is required, identify and correct the source of the air or water leak as soon as possible. Moisture contamination caused by leakage can shorten the life expectancy of the machine.

Figure 20
Compressor Inlet Vane Actuator

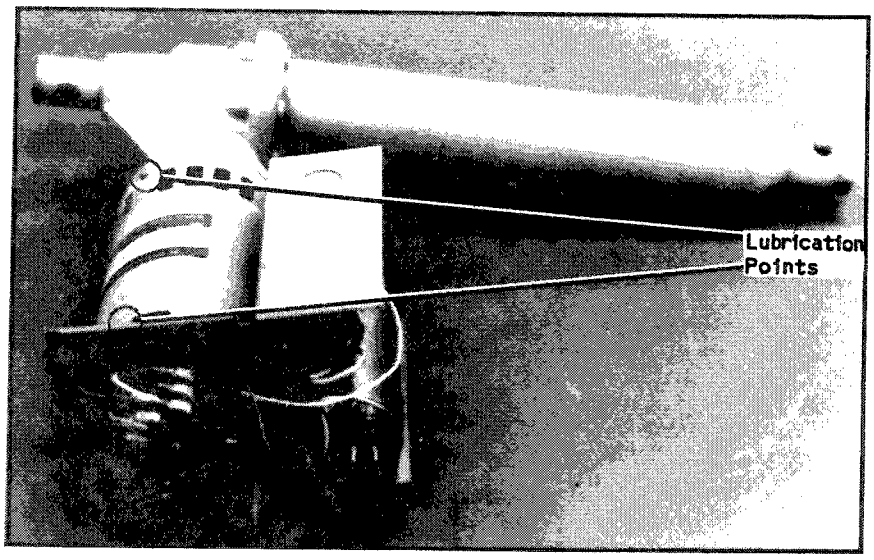

Annual Maintenance

WARNING: Open and lock the unit disconnect to prevent injury or death due to electrical shock or contact with moving parts.

The Trane Company recommends that the chiller be shut down for inspection once each year to check the items listed below; for a more detailed inspection checklist, refer to the "Model CVHE CenTraVac Annual Inspection Checklist and Report" illustrated in Figure 21.

1. Inspect and clean the inside of the purge drum; step-by-step instructions are provided in the "Maintenance Procedures" section of this manual.

2. Change the oil in the oil sump.

Note: If an oil analysis program is being implemented, use the set procedures established with the program. The time between changes can be extended based on the analysis results.

3. Replace the oil system filter. While other methods are commonly practiced in the field, the recommended procedure for removing the oil filter (or element filter in an oil cooler) from a unit under negative pressure requires the use of dry nitrogen to bring the unit up to atmospheric pressure. Once the old filter is replaced and reassembly completed, the unit must be purged.

Note: If the unit is under a positive pressure, the entering and leaving lines at the oil filter (or oil cooler) must be disconnected. Be sure to plug the open end of each line with a flare fitting plug to reduce refrigerant loss during the filter changeout procedure.

4. Inspect the condenser tubes for fouling; clean if necessary.

5. Measure the compressor motor winding resistance to ground; qualified service personnel should conduct this procedure to ensure that the findings are properly interpreted.

6. Contact a qualified service organization to leak-test the chiller; this procedure is especially important if the system requires frequent purging.

Caution: If frequent purging is required, identify and correct the source of the air or water leak as soon as possible. Moisture contamination caused by leakage can shorten the life expectancy of the machine.

Remember that if the system will be off for an extended period of time, the purge unit must be operated for approximately 30 minutes every two weeks to keep the chiller free of air and noncondensibles. Since the machine is not providing chilled water, cool water (i.e., less than 80 F) must be supplied to the purge condenser drum by adjusting the water valves to provide alternate water flow through the purge condenser.

Other Maintenance Recommendations

1. Use a nondestructive tube test to inspect the condenser and evaporator tubes at three-year intervals.

Note: It may be desirable to perform tube tests on these components at more frequent intervals, depending upon chiller application. This is especially true of critical process equipment.

2. Depending upon chiller duty, contact a qualified service organization to determine when to conduct a complete examination of the unit to discern the condition of the compressor and internal components.

Conditions which may dictate shorter intervals between chiller inspections include:

a. chronic air leaks, which can cause acidic conditions in the compressor oil and result in premature bearing wear; and,

b. evaporator or condenser water tube leaks. Water mixed with the compressor oil can result in bearing pitting, corrosion, or excessive wear.

3. Submit a sample of the compressor oil to a qualified laboratory for comprehensive analysis on an annual basis; such an analysis will determine the system moisture content, acid level and wear metal content of the oil, and can be used as a diagnostic tool.

Figure 21
CVHE Annual Inspection Checklist and Report

Model CVHE CenTraVac
Annual Inspection Checklist and Report

1. **Review Unit with Operating Personnel.**

2. **Compressor Motor.**

__Motor Continuity Check __Good __Open
__Check and Tighten Motor Terminals
__Meg Motor __Phase 1 __Phase 2 __Phase 3
__Check Nameplate Amp Rating __Amps

3. **Starter.**

__Check Overload Setting __Trip Point, Amps
__Tighten all Terminals
__Check Condition of Starter
Contacts __Good __Fair __Replace

4. **Oil Sump.**

__Change Oil __Gallons (7 Gallons Required)
(If Oil Analysis, Refer to Program Procedures)
__Check Oil Condition __Good __Fair ___Poor
__Check Oil Temperature Control Setting __°F
__Oil Pump Motor Continuity Test __Good __Ope
__Oil Pump Motor Ground Check __Good __Bad
__Check Motor Terminals, Tighten
__Check Magnetic Starter
__Clean all Strainers
__Change Hi-Density Filter

5. **Control Circuits.**

__Low Temperature Control Calibration
__Setpoint __Trip-Point (Ice Water)
__High Pressure Control Calibration
__Setpoint __Trip-Point (Use Oil-Pumped Dry Nitrogen to Check)
__Oil Pressure Control Calibration
__Cut-Out __Cut In
__Check Adjustment and Operation of Damper Motor

6. **Condenser.**

__Visually Inspect for Scaling in Tubes, Note Findings and Make Recommendations

7. **Leak Test Chiller.**

8. **Refrigerant and Oil Analysis for Acid Content.**
(Attach Copy of Analysis to Next Monthly Inspection Report)

__Sample Refrigerant and Oil for Lab. Analysis

9. **Purge Unit.**

__Check Condition and Level of Float Valve
__Meg Purge Unit Motor __To Ground
__Motor Condition __Clean __Dirty
__Lubricate Motor
__Make Leak Check at Connections
__Check Relief Valve Action
__Check Compressor Efficiency
__Disassemble and Clean Purge Tank and Coil

10. **Cover Logs and Logging System with Operator**

__Review Proper Logging Procedures with Operator

11. **Comments.**

_____
_____
_____

12. **Recommendations.**

_____
_____

Purge Unit Maintenance

Before conducting the purge maintenance procedures described in the following paragraphs, shut down purge unit operation.

WARNING: Before attempting to perform any maintenance on the purge unit, disconnect the electrical power supply to the purge unit heater and purge compressor drive motor. To prevent injury or death due to electrical shock or contact with moving parts, verify that all power switches are locked or safetied in the "OFF" position.

The compressor in the purge unit has been tested and found to have an acceptable leak rate during the first 1500 hours of normal purge operation. This performance has been obtained through the use of rings specifically designed for this application.

Note: Replacement of the compressor or rings with standard parts will result in refrigerant loss at a rate approximately eight times greater than the Trane version.

The rings will have to be replaced at 1500 hour intervals or excessive refrigerant will be lost. Contact a local Trane service technician for ring replacement.

Purge Drum Cleanup

The purge drum should be disassembled annually for cleaning and maintenance. Use the procedure outlined below to remove the purge drum from the chiller.

WARNING: Open and lock unit disconnect to prevent injury or death due to electrical shock or contact with moving parts.

1. Isolate the purge suction line by closing the isolator valve at the condenser.

2. Isolate the refrigerant return line by closing the isolator valve at the evaporator.

3. Close all of the water supply and return valves to the purge drum; then, disconnect the water connections at the drum. Refer to Figure 22 for an illustration of the purge drum.

4. Disconnect the evaporator liquid return line connection at the purge drum.

5. Detach the purge drum gas inlet line.

6. Remove the four purge drum base plate retaining screws.

Figure 22
Purge Unit Components

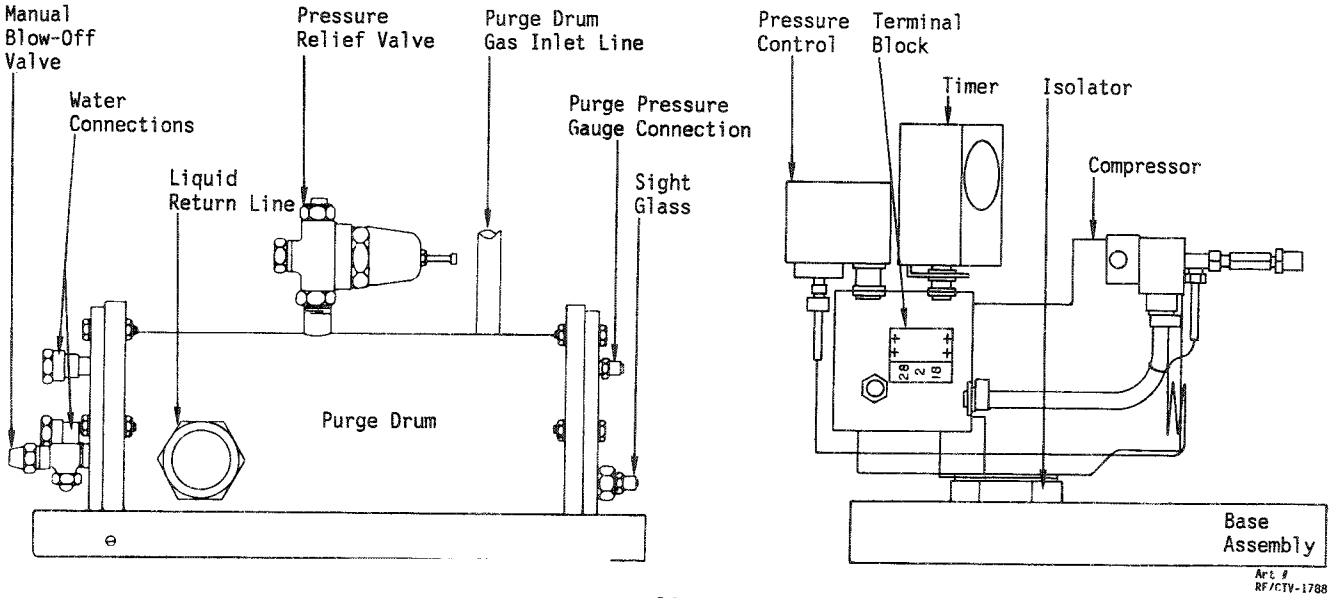

7. Clean the purge drum water coil using the step-by-step instructions provided below:

a. Remove the six end plate retaining screws from the water connection end of the purge drum; see Figure 23.

b. Remove the end plate with attached coil and gasket. Refer to Figure 24.

c. Clean the outside of the water coil with a brush or solvent.

Caution: To prevent damage to the water coil, do NOT use a wire brush to clean the coil surface.

d. Clean the inside of the purge drum with a solvent. (Again, do not use a wire brush or the interior surface of the drum may be damaged.)

e. Clean the small vent hole at the top of the divider plate; this hole must be open. Refer to Figure 25 for vent hole location.

f. Circulate a chemical cleaning solution through the water coil to remove scale from the interior surfaces.

8. Use the procedure outlined below to remove and clean the float valve assembly:

a. Remove the six end plate retaining bolts from the refrigerant connection end of the purge drum.

Figure 23
Purge Unit Assembly

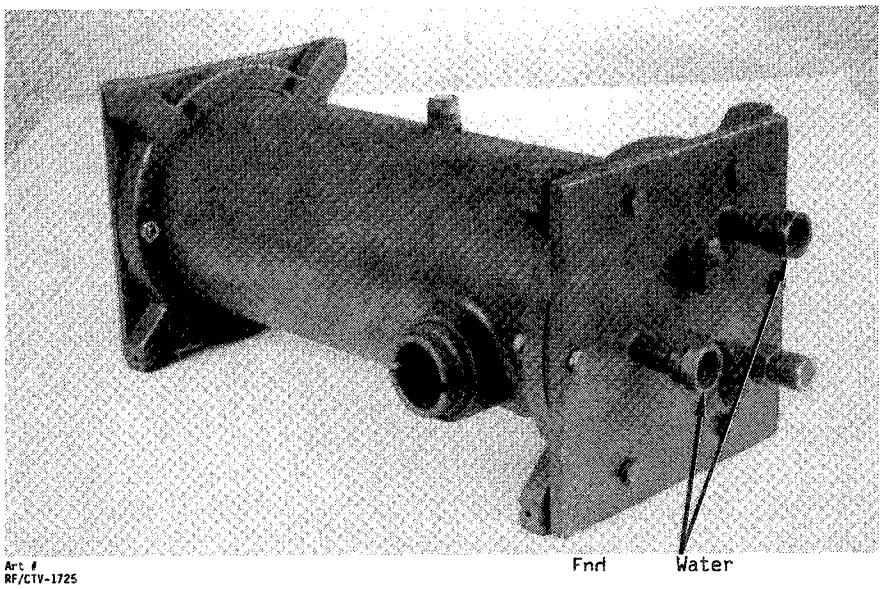

Art #
RF/CTV-1725

Figure 24
Removing Drum End Plate, Including Water Coil and Gasket

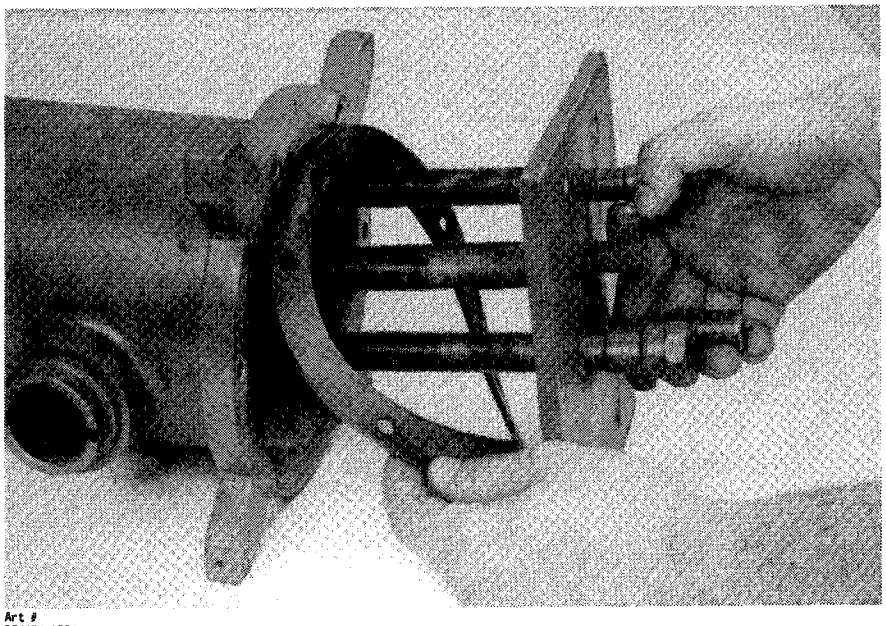

Art #
RF/CTV-1726

b. Remove the end plate and gasket shown in Figure 26.

c. Clean the inside of the purge drum with a solvent; do not use a wire brush or the interior surface of the drum may be damaged.

Be sure to check the small hole at the top of the drum divider plate and the slot at the bottom - both should be open.

d. Remove the cotter pin from the float valve assembly; see Figure 26.

e. Clean or replace the float valve seat shown in Figure 27. (To remove the seat, remove the 1/4-inch angle fitting and the float seat retaining nut.)

f. Examine the viton washer identified in Figure 28; if it is cracked or hardened, replace it.

g. Check the condition of the float; if necessary, it can be detached for replacement by removing the retaining screw.

9. Reassemble the purge drum by reversing the order of disassembly. Be sure to use new gaskets on the end plates, but do not use oil or grease on the gaskets and flanges. Tighten the end plate bolts evently until the gaskets just begin to protrude between the flanges.

10. Pressure test all joints at 30 psig using dry nitrogen and R-12 as a tracer.

Purge Drum Water Elimination

Water condensed in the purge drum floats on the surface of the liquid refrigerant. Normally, a line of separation can be seen through the purge drum sight glass.

To remove water from the drum, operate the purge compressor until a positive pressure of 5 to 10 psig is indicated on purge drum pressure gauge. Then turn off the purge compressor and open the blow-off valve (Figure 22) until all of the water has drained away.

Caution: If frequent purging is required, identify and correct the source of the air or water leak as soon as possible. Moisture contamination caused by leakage can shorten the life expectancy of the machine.

Lubrication

The only components of the CVHE CenTraVac that require periodic lubrication are the bearing surfaces of the external vane linkage assembly, and the flow diverter on the optional automatic condenser cleaning system.

Lubricate the vane shaft bearings and the rod end bearings on the vane linkage with a few drops of light machine oil. For flow diverter lubrication, refer to "Periodic Maintenance".

Figure 25
Interior of Purge Drum (Viewed from Either End)

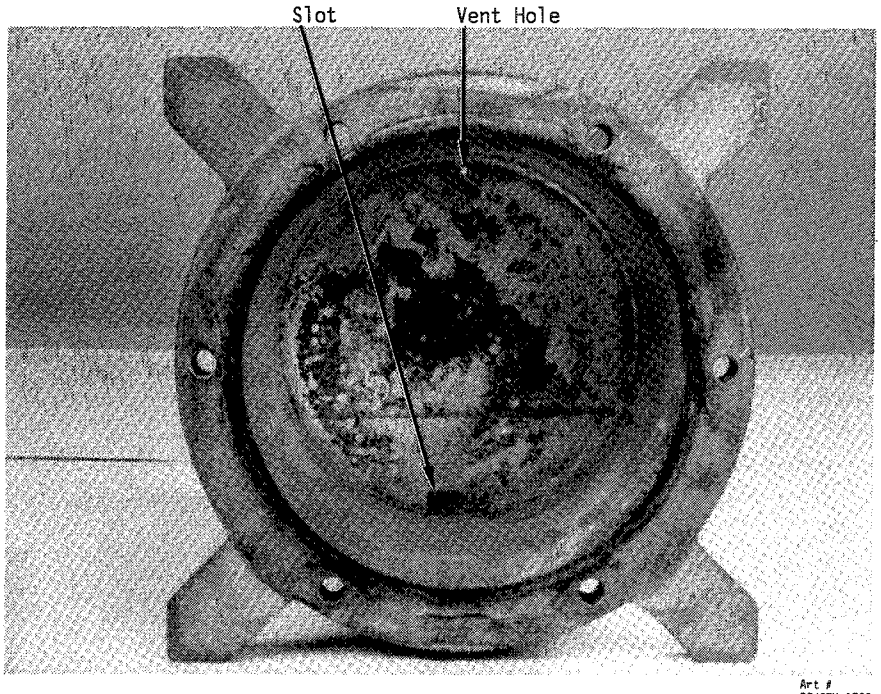

Art #
RF/CTV-1728

Figure 26
Purge Drum Float Assembly

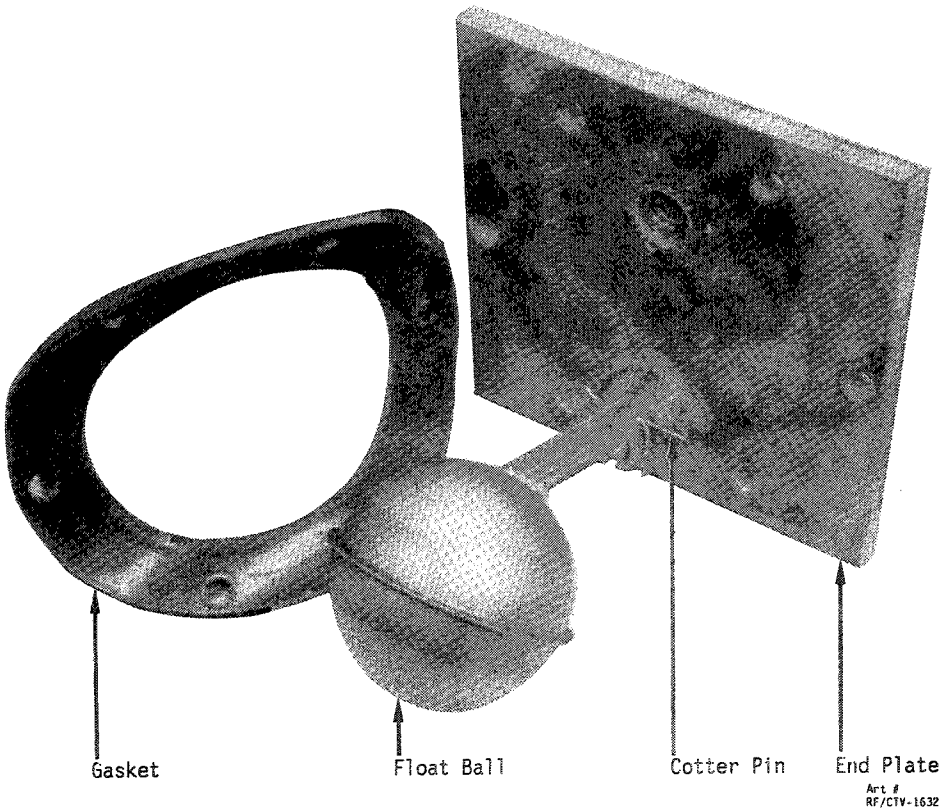

Figure 27
Valve Seat Location

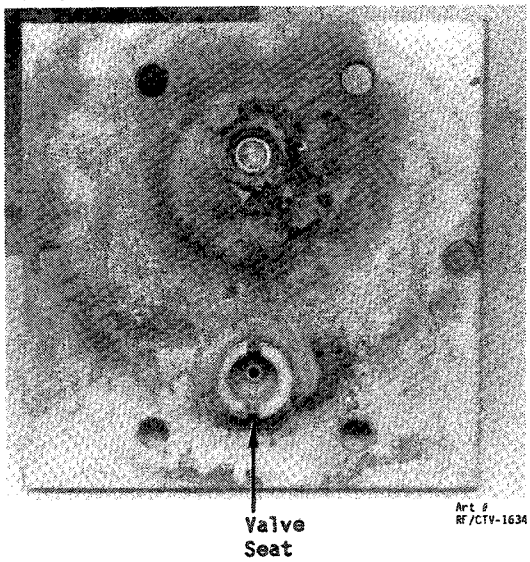

Figure 28
Float Assembly

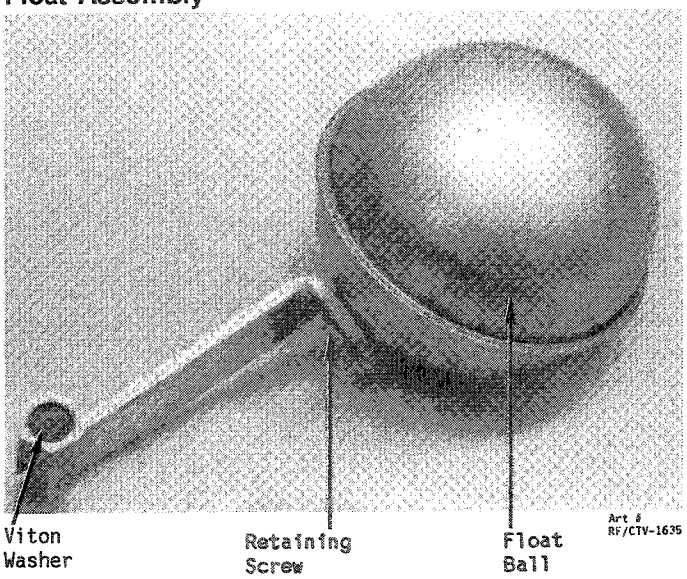

Refrigerant Charge

To determine the refrigerant charge in the chiller, it is necessary to draw off the refrigerant and weigh it back into the machine. If the unit is low on refrigerant, contact a qualified service organization to ensure that the proper amount of refrigerant is added.

Cleaning the Condenser

Caution: Do not use untreated or improperly treated water, or equipment damage may occur.

Condenser tube fouling is indicated when the approach temperature (i.e., the difference between the refrigerant condensing temperature and the leaving water temperature) is higher than predicted. If the annual condenser tube inspection indicates that the tubes are fouled, two cleaning methods--mechanical and chemical--can be used to rid the tubes of this foreign matter.

Use the mechanical cleaning method to remove sludge and loose material from the condenser tubes:

1. Remove the retaining nuts and bolts from the water box covers at each end of the condenser. Use a hoist to lift the covers off the water box. (A threaded connection is provided on each water box cover to allow the insertion of an eyebolt.)

2. Work a round nylon or bristle brush (attached to a rod) in and out of each of the condenser water tubes to loosen the sludge.

3. Thoroughly flush the condenser water tubes with clean water.

Scale deposits are best removed by chemical means. Be sure to consult any large chemical house in the area (i.e., since they will know the chemistry of the water) for a recommended cleaning solution suitable for the job. (Remember that the standard condenser water circuit is composed solely of copper, cast iron and steel.) Refer to Figure 29 for an illustration of a typical chemical cleaning setup.

All of the materials used in the external circulation system, the quantity of the solution, the duration of the cleaning period, and any required safety precautions should be approved by the company furnishing the materials or performing the cleaning. Remember, however, that whenever the chemical tube cleaning method is used, it must be followed up with mechanical tube cleaning. The Trane Company assumes no liability for equipment damage caused by improper cleaning procedures.

Note: Since the evaporator is typically part of the closed circuit, it does not accumulate appreciable amounts of scale or sludge. However, if cleaning is deemed necessary, use the same cleaning methods described above for the condenser tube bundle.

Figure 29
Typical Chemical Cleaning Setup

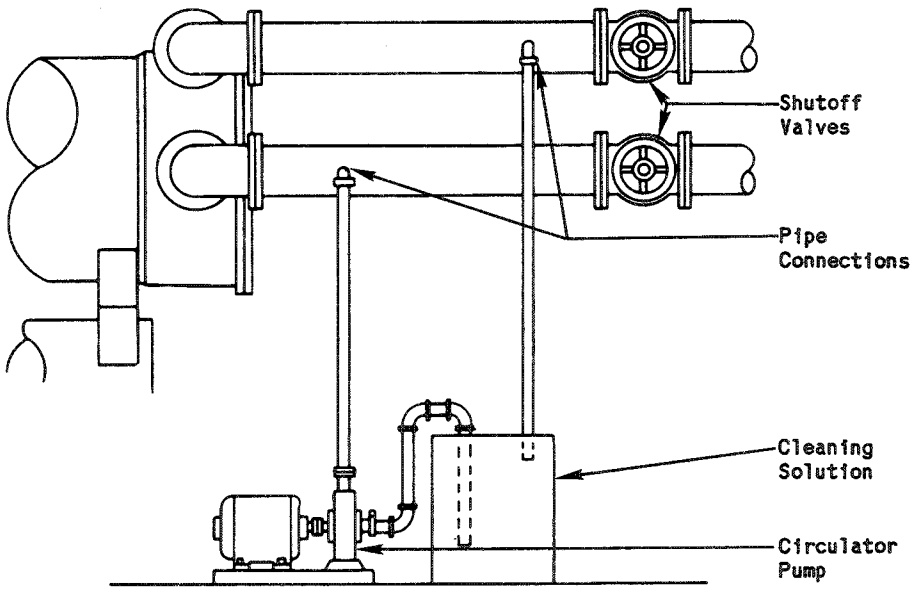

Cleaning the Auxiliaries

If the coils of the purge unit are supplied with water from the same source as that used by the evaporator, they will be subjected to the same type of scaling. When cleaning is required, use the same chemical cleaning method described for the condenser; be sure to thoroughly flush the chemically-cleaned parts with clear water before connecting them to the remainder of the water circuit.

Note: If the auxiliaries are piped into the chilled water circuit only, cleaning is usually not necessary.

Caution: Do not use untreated or improperly treated water, or equipment damage may result.

Compressor Oil

Caution: To prevent the possible burnout of the oil sump heater, be sure to open the control panel disconnect switch before draining the sump.

Approved oils for CVHE CenTraVac chillers are Mobil Whiterex No. 425 and Texaco WF-68; the design oil charge for all units is seven gallons. If these oils cannot be obtained, contact your local Trane representative for recommendations.

Note: An oil transfer pump can be used to change the compressor motor oil incidentally of machine pressure.

Draining the Oil Sump

The saturation pressure of R-11 is less than atmospheric pressure at temperatures below 75 F, and greater than atmospheric pressure at temperatures above 75 F. If the ambient temperature is 75 F or above and the evaporator pressure gauge indicates a positive pressure, open the oil sump charging valve located at the rear of the oil sump and drain the oil into a suitable container.

If the ambient temperature is less than 75 F and the evaporator pressure gauge indicates a negative pressure, the oil must be pumped and drawn from the sump. To do this:

1. Connect a line from an auxiliary oil pump to the oil charging valve located at the rear of the oil sump.

2. Operate the auxiliary oil pump and open the charging valve.

3. After the oil is removed from the sump, close the charging valve.

Note: In lieu of an auxiliary pump, the oil can also be forced from the sump by using dry nitrogen to build a slight positive pressure in the unit.

Filling the Oil Sump

Note: The procedure described below is only applicable if the system is under a vacuum. If the ambient temperature conditions and evaporator pressure gauge reading indicate a positive pressure, pump the oil into the system.

Use the procedure outlined below to fill the oil sump. Be sure to charge the oil directly from the container in which it was shipped to prevent dirt and other foreign matter from entering the sump.

1. Connect a clean piece of clear Tygon vacuum tubing to the oil charging valve.

2. Submerge the open end of the tubing in the container of oil.

3. Open the oil charging valve; if the system is under a vacuum, the oil will be drawn readily from the container.

Caution: To prevent the entry of air into the oil sump make certain that the open end of the tube remains submerged in the oil during the entire charging process. Close the charging valve before raising the tube above the surface of the oil.

4. After the sump is full, close the control panel disconnect switch to energize the oil sump heater.

Control Settings and Adjustments

For your reference, a list of the CVHE controls and their settings is provided in Table 3. For control calibration and checkout procedures, contact a qualified service organization.

Table 3
CVHE Control Settings

Control	Setting
High Pressure Control (S1)[1]	15 psig cutout, 5 psi differential
Low Refrigerant Temp. Control (S2)	Opens as necessary on a fall in refrigerant temperature; adjustable
Chilled Water Demand Control (S3)	As Required
Oil Pressure Control (S8)	Cut-in = 15 psid, Cut-out = 8 psid
Oil Temperature Control (S10)	150 F setpoint, 5 F differential
Purge High Pressure Control (S13)	30 psig cutout, 10 psi differential

Note: If the ASME construction stamp appears on the condenser shell, the HPC cutout point is 25 ± 5 psig.

Trouble Analysis

To use the troubleshooting charts provided on the following pages, use the instructions outlined below:

1. Locate the chart that pertains to the general category of the problem experienced (i.e., Chart A = Unit Start-Up, Chart B = Unit Operation, Chart C = Lubrication System, Chart D = System Temperatures and Pressures, and Chart E = Automatic Condenser Cleaning System Option).

2. After locating the proper chart, determine which of the problem types listed horizontally across the top of the chart is applicable. Notice that the trouble analysis chart for the automatic condenser cleaning system is divided into three columns: "Symptom", "Probable Cause", and "Recommended Action".

3. Use the symptoms listed on the slanted lines to pinpoint the specific problem being experienced. (Legends identifying the control panel lights and circuit breakers are provided on Chart A for your reference.)

4. Trace down the vertical column directly beneath the problem identified in Step 3 to the numbered boxes. The horizontal lines on which the numbered boxes occur indicate the possible causes (left-hand side) and the recommended actions (right-hand side).

The numbers in the boxes indicate the order of probability in which these causes are likely to occur, and the sequence in which the recommended actions should be checked.

Note: These troubleshooting charts are provided solely as a guide for determining the cause of mechanical failure or equipment malfunction. When operational problems do occur, be sure to contact a qualified service organization to ensure proper diagnosis and repair of the unit.

Chart A: Trouble Analysis - Unit Start-Up

Panel Light Legend
DS1 Safeties Satisfied
DS2 Cooling Required
DS3 Restart Time Elapsed
DS4 Chilled Water
DS5 Condenser Water
DS6 Oil Pump
DS7 System

Circuit Breaker Legend
CB-1 Low Oil Pressure
CB-2 Hi Cond. Pressure
CB-3 Low Refrig. Temp.
CB-4 Hi Motor Temp.
CB-5 Starter Fault
CB-6 Hi Oil Temp.

		Unit Will Not Start									
		Compressor Motor Starter Will Not Pull In									
		Oil Pump Will Not Run					Oil Pump Runs				
	Panel Light On	None	DS1 ON	DS2	DS3	DS4	DS4	DS6	DS7	DS7	
POSSIBLE CAUSE	Symptom	No Voltage To F1 Side of DS1 Light	No Voltage to F1 Side of DS2 Light	No Voltage to F1 Side of DS3	No Voltage to F1 Side of DS4	No Voltage to F1 Side of DS6	No Voltage to F1 Side of DS6	No Voltage to F1 Side of DS7	No Voltage to K23-24 Relays in Comp. Motor Starter	Comp. Motor Starter Pulls In, To Transition or Immediate CB-5 Trip	RECOMMENDED ACTION
Main Disconnect Open	2										Close Main Disconnect
No Control Voltage	3										Check Control Circuit Fuse
Safety Tripped	4										Reset Safety Control Circuit Breakers (See Charts C & D For Causes)
Loose Wiring or Connectors	5	2	2	6		2	3	1			Check Wiring
S3 - Start-Stop Thermostat Open		1									No Call For Cooling
S4 Program Timer Open			1								Restart Time Not Elapsed
A3 Vane Actuator end Switch Open				1							Check Vane Position
S10 Low Oil Sump Temp. Thermostat Open				5							Check Oil Sump Temperature
S1 High Cond. Press. Switch Contacts Not Closed				4							Check S1 Switch Contacts
K9 Normally Closed Contacts Open				2							Check Relay Contacts
S5 Evap. Chilled Water Flow Switch Open				3							Check Evap. Water Flow
S6 Switch (S-6) In Off Position					1						Check Switch Position
S8 Oil Pressure Switch Not Closed						1					Check Oil Pressure (Oil Filter, Pressure, Regulator, Oil Pump Defective).
S4 Program Timer Holding Unit Off							1				Check S4 Contacts 13-81 and 81-82
K10 Normally Closed Contact Open.							2				Check S4 Timer. Check For Defective K10 Contacts
Not Energizing					3						Check For Defective K1 Contacts, S9 Contacts, F2-21 Open, or Defective K-5
Oil Pump Motor Defective					2						Meg Oil Pump Motor Contacts
Compressor Motor Starter Defective										1	Contact a Qualified Service Organization
Compressor Motor Defective										2	Contact a Qualified Service Organization
Main Electrical Power Distribution	1									3	CONTACT POWER COMPANY

Chart B: Trouble Analysis - Unit Operation

COMPLAINT

POSSIBLE CAUSE	SYMPTOM: Safety CKT Breakers Open	Unit Runs For A While Then Stops: Demand Switch S-3 Closes and Opens	Unit Runs For A While Then Stops: Starter Overloads Trip Out	Unit Runs For A While Then Stops: No Apparent Symptoms	Unit Runs Without Stopping: Does Not Lower Water Temperature	Unit Runs Without Stopping: Lower Water Temp. Slightly	Unit Surges (Squealing or Buffeting Sound From Compressor): High Condenser Pressure	Unit Surges (Squealing or Buffeting Sound From Compressor): Low Evaporator Pressure	Unit Hunts: Loads and Unloads Continuously	Unit Carries Over: Disch. and Suction Temp. Low	Fluctuating Amps: Ammeter Reading Not Steady	RECOMMENDED ACTION
Unit Shutdown On Safety Controls	1											Refer to "Unit Starting" Chart A
Low Load On System		1									4	Normal Operation, Lower Cut-Out Point and Widen Differential to Reduce Cycling
Chilled Water Demand Switch Faulty or Improperly Set		2						3				Contact a **Qualified Service Organization**
Temp. Controller Faulty or Improperly Set		3			1	2		2	6		1	Contact a **Qualified Service Organization**
Low Water Flow Through Evap. Air In Water Circuit		4							4			Check Water Pumps, Strainers, Valves
Motor Overload Out of Adj.			1									**Contact a Qualified Service Organization**
Low Voltage To Unit			2									Contact Power Company
Current Control Faulty or Improperly Adjusted			3									**Contact a Qualified Service Organization**
Vane Operator Faulty or Out of Adjustment			4									**Contact a Qualified Service Organization**
Compressor Motor Faulty			5									**Contact a Qualified Service Organization**
Interlocks Faulty				1								Check Opr. of Water Pumps, Flow Switches, etc.
Fluttering Flow Switches				3								Check Location of Switches. Bleed Air From Water Circuit
Auxiliary Run Contacts On Starter Faulty					2	4						Clean or Replace
Low Refrigerant Charge					3	5		6	2			**Contact a Qualified Service Organization**
Air In Water Circuit				2	4	6	2	4	5			Vent Air From Water Circuit
Loose Wiring or Connections				4	5	7						Check Continuity of Circuit to Locate - Repair
Oil In Evaporator					6	9				2		Run Unit at Part Load to Bring Oil Back to Sump. Check For Blocked or Loose Oil Lines. Check Distill System
Load Too Great For Unit						1						Check Building for Excessive Heat Load
Current Control Switch Set Too Low					7	3						Raise Setting
Evaporator Tubes Fouled						8						Clean Tubes - Check Water Treatment
High Condenser Pressure							1					See Chart D
Low Evaporator Pressure								1				See Chart D
Overcharge of Refrigerant										1		**Contact a Qualified Service Organization**
Blocked Orifice Plates								5				**Contact a Qualified Service Organization**
System Water Returning to Unit Too Warm										3		Reduce Current Control Setting if Just Starting Unit. Check Bldg. for Excessive Heat Load
Unit Carrying Over									3		2	See Column On "Unit Carries Over"
Unit Surging											3	See Column On "Unit Surges"
Low Press. Override Faulty or Improperly Set									1			**Contact a Qualified Service Organization**

Chart C: Trouble Analysis - Lubrication

POSSIBLE CAUSE	SYMPTOM: CB1 Trips	Net Oil Pressure Above 35 PSIG	Sump Temp. Below 125 F	Sump Temp. Above 160 F	Oil Level Below Lower Sight Glass	Oil Sump Foams Excessively	RECOMMENDED ACTION
	COMPLAINT: Unit Trips on Low Oil Pressure	Oil Pressure Too High	Oil Sump Too Cold	Oil Sump Too Hot	Unit Loses Oil	Excess Refrig. In Oil	
Oil Filter Dirty	1						Change Filter Element
Oil Cold - Refrig. In Oil	2						Check "Oil Sump Too Cold" Column
Oil Press. Control Faulty Or Out of Adjustment	3						**Contact a Qualified Service Organization**
Oil Press. Regulator Faulty or Out of Adjustment	4						**Contact a Qualified Service Organization**
Low Oil Level In Sump	5						See Column on "Unit Loses Oil"
Faulty Oil Pump	6						Replace
Improper Oil	7	1					Change Oil and Use Recommended Oil Only
Faulty Gauge	8	2	5				**Contact a Qualified Service Organization**
Temp. Control Faulty or Out of Adjustment			1				**Contact a Qualified Service Organization**
Faulty Oil Heater			2				Check Operation of Heater
Excessive Refrig. In Oil			3				See Column on "Excess Refrig. In Oil"
Oil Pump Continues to Run When Unit Stops			4		2	3	If Pump Runs More Than **3** Min., Check for Defective K5 Contacts, S-9 Timer, K-1 Contacts
Oil Sump Too Cold					3	2	See "Oil Sump Too Cold" Column
Loose or Blocked Oil Lines					1		Check External Line For Leaks - Contact a **Qualified Service Organization** To Inspect Internal Lines
Oil Sump Vent Open Too Far	10		7				**Contact a Qualified Service Organization**
Oil Sump Vent Not Open Far Enough				2	5	5	**Contact a Qualified Service Organization**

Chart D: Trouble Analysis - System Temperatures and Pressures

POSSIBLE CAUSE	SYMPTOM: CB2 TRIPS	Condenser Excessively Cool	CB3 Trips	Evaporator Excessively Warm	See Chart C	See Chart C	CB4 Trips	RECOMMENDED ACTION
	COMPLAINT: High Cond. Pressure	Low Cond. Pressure	Low Evap. Pressure	High Evap. Pressure	Low Oil Pressure or Temperature	High Oil Pressure or Temperature	Motor Temp. High	
Condenser Dirty	1							See "Cleaning Condenser"
Air In Water Circuit	2		7					Vent Air From Circuit
High Press. Control Faulty or Out of Adjustment	3							**Contact a Qualified Service Organization**
Safety Control Relay Faulty	4							Replace
Loose Wiring or Connections	5							Check Continuity of Circuits - Repair
Temp. Control Faulty or Improperly Set			1					**Contact a Qualified Service Organization**
Vane Operator Faulty or Out of Adjustment			2					**Contact a Qualified Service Organization**
Low Water Flow Through Evaporator			3					Check Water Pumps, Strainers and Valves
Chilled Water Demand Switch Faulty or Improperly Set			4					**Contact a Qualified Service Organization**
Low Refrigerant Charge			5					**Contact a Qualified Service Organization**
Low Press. Control Faulty or Improperly Set			6					**Contact a Qualified Service Organization**
Blocked Orifice Plates			8					**Contact a Qualified Service Organization**
Light Load on Unit		1		1				Normal Operation
Unit Not Lowering Water Temperature				2				See Chart B "Unit Runs Without Stopping"
Blocked Motor Cooling Line							1	Check Motor Cooling Sight Glass For Flow - Clean Strainer Make Sure Service Valves are Open
Motor Temp. Control Faulty							2	Replace
Voltage Imbalance In Power Circuit							3	Contact Power Company to Correct
Compressor Motor Faulty							4	**Contact a Qualified Service Organization**

Chart E: Trouble Analysis: Automatic Condenser Cleaning System (Optional)

Symptom	Probable Cause	Recommended Action
Incomplete Sequence Alarm light on. Normal and reverse lights illuminate properly.	Inadequate air pressure.	Check supply pressure.
	Choppy movement of diverter plug.	Contact your service company to readjust plug.
	Solenoid valve sticking or exhaust restrictor(s) partially plugged.	Clean solenoid valve/ exhaust restrictor(s); check condition of air.
	Exhaust restrictor screw(s) not set properly.	Reset screws for proper transfer time. Be sure to tighten lock nuts.
	Setting of 2TR timer less than actual transfer time.	Re-adjust setting of 2TR timer to reflect actual transfer time.
	Air leak in: a. Air lines/connections b. Actuator cylinder seals.	Isolate and repair leak. Contact service company to install repair kit.
Incomplete Sequence Alarm light on but normal and reverse lights not lit. Diverter in correct position.	Position indicator switch not being depresssed.	Contact service company for adjustments or repair.
	Faulty position indicator switch.	Replace switch.
	Faulty 2TR timer.	Replace timer.
Normal or Reverse lights not on. Diverter in correct position. Incomplete Sequence Alarm light not on.	Lamp(s) faulty.	Check indicator lights; replace bulb(s) if needed.
No panel lights on.	Fuse blown.	Replace fuse; check incoming power.
	No power at panel.	Check power source.
Diverter won't cycle. Cycle count lower than expected.	24 hour time clock malfunctioning.	Check time clock operation; contact service company for repair or replacement.
	1TR timer malfunctioning.	Check timer operation; contact service company for repair or replacement.
	No/low air pressure.	Check supply pressures.
	Diverter plug stuck.	Contact service company to readjust plug.
	Solenoid valve stuck, or exhaust restrictors plugged.	Clean solenoid valve/ exhaust restrictors; check condition of air.
Water leaking from packing area.	Packing gland loose.	Tighten packing gland.
	Packing needs replacement.	Contact service company to replace packing.
Water hammer occurs during diverter cycling.	Transfer time too fast.	Throttle exhaust restrictors to slow diverter transfer time.

CENTRAVAC OPERATING LOG

Unit Designation _____ Unit Serial No. _____ Date _____

Operator _____ Time Started _____ AM _ PM _

STATION	READING	HOUR OR LOGGING TIME							
		1	2	3	4	5	6	7	8
	Voltage								
	Amperage								
	Oil Temp-Sump °F								
	Oil Level								
	Oil Gauge Pressure psig								
	Evap. Gauge Pressure psig								
	Cond. Gauge Pressure psig								
	Purge Drum Pressure (if operating) psig								
	Condenser Water Pressure Difference - psig								
	Condenser Water - In °F								
	Condenser Water - Out °F								
	Refrigerant Liquid Temp. Condenser - °F								
	Chilled Water Pressure Difference - psig								
	Chilled Water In - °F								
	Chilled Water Out - °F								
	Refrigerant Liquid Temperature Evaporator °F								
	% current								

OPERATORS REPORT

ENTER ALL STARTS-STOPS-PERIODIC MAINTENANCE CHECKS, MALFUNCTIONS, ETC.

PERIODIC MAINTENANCE CHECKS

WEEKLY

____ Operate Purge as needed

____ Check Purge drum for water

QUARTERLY

____ Check oil in Purge Comp.

____ Oil Purge comp. motor

___ Check Purge belt tension

____ Clean all water strainers

FOR ANNUAL SERVICE INSPECTION

Contact a Qualified Service Organization

Refer to your Trane Operation & Maintenance Manual for Complete Recommendations and Procedures.

TRANE®
AIR CONDITIONING

FILE INFORMATION
DIVISION TAB — TRANE REFRIGERATION PRODUCTS
PRODUCT TAB — LIQUID CHILLERS — CENTRIFUGAL CenTraVac ®
MODEL TAB — CVHE
LITERATURE ITEM — Wiring

LITERATURE FILE NO.

CVHE-W-1

UNIT WIRING

Since the Trane Company has a policy of continuous product improvement, it reserves the right to change specifications and design without notice. The installation and servicing of the equipment referred to in this booklet should be done by qualified, experienced technicians.

FEBRUARY 1982
Supersedes CVHE-W-1
Dated May 1981

LIQUID CHILLERS - CENTRIFUGAL DIRECT DRIVE CENTRAVAC®

MODELS CVHE 013 THROUGH CVHE 125
COOLING ONLY AND HEAT RECOVERY UNITS

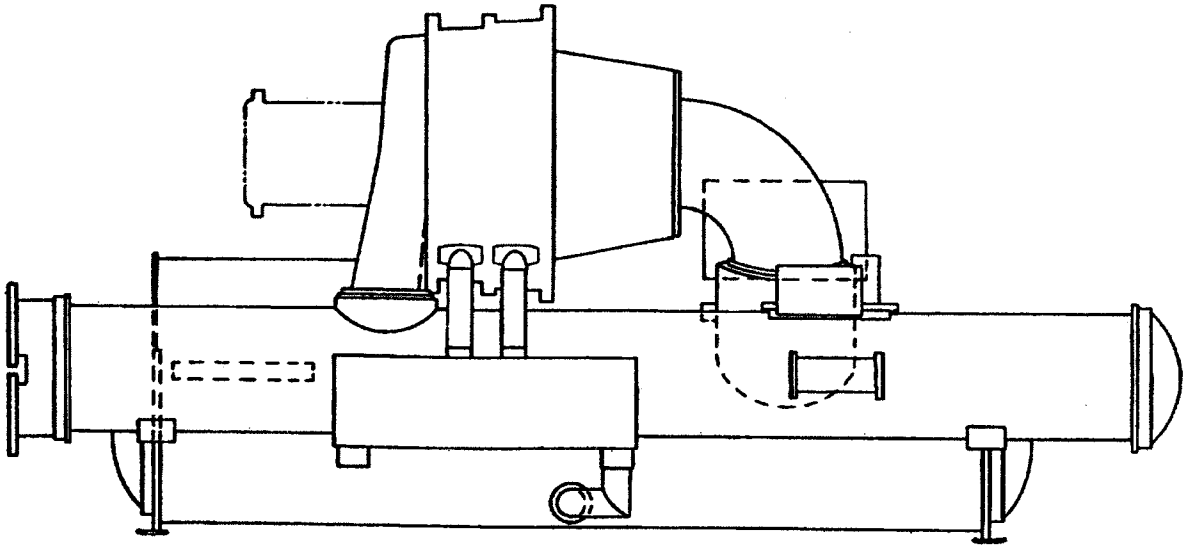

©THE TRANE COMPANY 1982
COMMERCIAL AIR CONDITIONING DIVISION
LA CROSSE, WISCONSIN 54601
PRINTED IN U.S.A.

MODEL NUMBER DESCRIPTION

Trane Model Numbers allow the complete description of a machine and its standard options without referring to the serial number. Although all model number information is not required to determine machine performance, all designators must be filled in to enter an order into the Trane order system. Most standard designators are shown below. Other designators for optional or special features or materials may be provided by the factory.

CV H E 050 F A _ 2 M _ 240 1 D A 1

CENTRAVAC

DIRECT DRIVE

DEVELOPMENT SEQUENCE

COMPRESSOR DESIGNATORS
are listed in Table 13-1, Page 13

NOMINAL VOLTAGE DESIGNATOR

DESIGNATOR	NOMINAL VOLTAGE
A	200 V – 60 HZ – 3 PH
B	208 V – 60 HZ – 3 PH
E	440 V – 60 HZ – 3 PH
F	460 V – 60 HZ – 3 PH
G	480 V – 60 HZ – 3 PH
H	575 V – 60 HZ – 3 PH
J	600 V – 60 HZ – 3 PH
K	2300 V – 60 HZ – 3 PH
L	3400 V – 60 HZ – 3 PH
M	4000 V – 60 HZ – 3 PH
N	4160 V – 60 HZ – 3 PH

UNIT TYPE

DESIGNATOR	UNIT TYPE
A	Cooling-Only
B	Heat Recovery
C	Auxiliary Condenser
D	Free Cooling

***DESIGN SEQUENCE**

ECONOMIZER DESIGNATOR

DESIGNATOR	ECONOMIZER
1	One Economizer
2	Two Economizers
3	One Economizer with Hot Gas Bypass
4	Two Economizers with Hot Gas Bypass

COMPRESSOR MOTOR DESIGNATOR

DESIGNATOR	A	B	C	D	E	F	G	H	J	K	L
Compressor Motor No.	98	105	116	131	142	156	172	184	204	220	256

DESIGNATOR	M	N	P	R	T	U	V	W	X	Y	Z
Compressor Motor No.	284	323	361	405	463	513	588	653	742	953	954

***COMPRESSOR MOTOR VENDOR DESIGNATOR**

IMPELLER DESIGNATOR

DESIGNATOR	235	240	245	250	254	260	266	270	275
Size (in)	23.5	24.0	24.5	25.0	25.5	26.0	26.6	27.0	27.5

EVAPORATOR BUNDLE SIZE DESIGNATOR

DESIGNATOR	BUNDLE SIZE
1	One
2	Two
3	Three
4	Four
5	Five

EVAPORATOR LENGTH DESIGNATOR

DESIGNATOR	EVAPORATOR LENGTH
C	Standard
D	Long

EVAPORATOR TUBE DESIGNATOR

Standard copper tubes are denoted by designator "A". Availability and designators of additional tube materials or wall thicknesses will be provided by the factory upon request.

EVAPORATOR CONNECTION ARRANGEMENT DESIGNATOR

DESIGNATOR	NUMBER OF PASSES	TYPE*	CONNECTION ARRANGEMENT** INLET: RIGHT OR LEFT HAND	INLET: END, FRONT OR REAR	OUTLET: RIGHT OR LEFT HAND	OUTLET: END, FRONT OR REAR
A	1	M	–	F	–	F
B	1	M	–	R	–	R
C	1	M	LH	F	RH	R
C	1	M	RH	R	LH	F
D	1	M	LH	R	RH	F
D	1	M	RH	F	LH	R
J	2	M	LH	F	LH	R
K	2	M	LH	R	LH	F
L	2	M	RH	F	RH	R
M	2	M	RH	R	RH	F
N	3	M	LH	F	RH	R
N	3	M	RH	R	LH	F
P	3	M	RH	F	LH	R
P	3	M	LH	R	RH	F
Y	1	NM	–	E	–	E
Z	2	NM	RH	E	RH	E
1	2	NM	LH	E	LH	E
3	3	NM	–	E	–	E

*Type M = Marine Type NM = Non-Marine Type
**Connection arrangement determined when facing control panel side of unit

C 1 1 D A 1 C 0 0 0 0 0 0

EVAPORATOR WATERSIDE WORKING PRESSURE DESIGNATOR

DESIGNATOR	CONNECTION TYPE	WORKING PRESSURE
A	Flanged	150 PSIG
B	Flanged	300 PSIG
C	Victaulic	150 PSIG
D	Victaulic	300 PSIG

CONDENSER REFRIGERANT SIDE CONSTRUCTION DESIGNATOR

DESIGNATOR	DESCRIPTION
1	Without ASME Code
2	With ASME Code

CONDENSER BUNDLE SIZE DESIGNATOR

DESIGNATOR	BUNDLE SIZE
1	One
2	Two
3	Three
4	Four
5	Five

CONDENSER LENGTH DESIGNATOR

DESIGNATOR	Condenser Length
C	Standard
D	Long

CONDENSER TUBE DESIGNATOR

Standard copper tubes are denoted by designator "A". Availability and designators of additional tube materials or wall thicknesses will be provided by the factory upon request.

CONDENSER CONNECTION ARRANGEMENT DESIGNATOR

DESIGNATOR	NUMBER OF PASSES	TYPE*	CONNECTION ARRANGEMENT*			
			INLET		OUTLET	
			RIGHT OR LEFT HAND	END, FRONT, OR REAR	RIGHT OR LEFT HAND	END, FRONT, OR REAR
A	1	M	–	F	–	F
B	1	M	–	R	–	R
C	1	M	LH	F	RH	R
C	1	M	RH	R	LH	F
D	1	M	LH	R	RH	F
D	1	M	RH	F	LH	R
E	2	M	LH	F	LH	F
F	2	M	LH	R	LH	R
G	2	M	RH	F	RH	F
H	2	M	RH	R	RH	R
J	2	M	LH	F	LH	R
K	2	M	LH	R	LH	F
L	2	M	RH	F	RH	R
M	2	M	RH	R	RH	F
Y	1	NM	–	E	–	E
Z	2	NM	RH	E	RH	E
1	2	NM	LH	E	LH	E

*Type M = Marine Type NM = Non-Marine Type

*Connection arrangement determined when facing control panel side of unit

*factory assigned

CONDENSER WATERSIDE WORKING PRESSURE DESIGNATOR

DESIGNATOR	CONNECTION TYPE	WORKING PRESSURE
A	Flanged	150 PSIG
B	Flanged	300 PSIG
C	Victaulic	150 PSIG
D	Victaulic	300 PSIG

HEAT RECOVERY CONDENSER BUNDLE SIZE DESIGNATOR

DESIGNATOR	BUNDLE SIZE
1	One
2	Two
3	Three
4	Four
5	Five
0	No Heat Recovery Condenser

HEAT RECOVERY CONDENSER LENGTH DESIGNATOR

DESIGNATOR	HEAT RECOVERY CONDENSER LENGTH
C	Standard
D	Long
0	No Heat Recovery Condenser

HEAT RECOVERY CONDENSER TUBE DESIGNATOR

Standard copper tubes are denoted by designator "A". Availability and designators of additional tube materials or wall thicknesses will be provided by the factory upon request. If no heat recovery condenser is provided, this designator should be "0"

HEAT RECOVERY CONDENSER CONNECTION ARRANGEMENT DESIGNATOR

DESIGNATOR	NUMBER OF PASSES	TYPE*	CONNECTION ARRANGEMENT*			
			INLET		OUTLET	
			RIGHT OR LEFT HAND	END, FRONT, OR REAR	RIGHT OR LEFT HAND	END, FRONT, OR REAR
A	1	M	–	F	–	F
B	1	M	–	R	–	R
C	1	M	LH	F	RH	R
C	1	M	RH	R	LH	F
D	1	M	LH	R	RH	F
D	1	M	RH	F	LH	R
E	2	M	LH	F	LH	F
F	2	M	LH	R	LH	R
G	2	M	RH	F	RH	F
H	2	M	RH	R	RH	R
J	2	M	LH	F	LH	R
K	2	M	LH	R	LH	F
L	2	M	RH	F	RH	R
M	2	M	RH	R	RH	F
Y	1	NM	–	E	–	E
Z	2	NM	RH	E	RH	E
1	2	NM	LH	E	LH	E
0	No Heat Recovery Condenser					

*Type M = Marine Type NM = Non-Marine Type

*Connection arrangement determined when facing control panel side of unit

0 0 0 0 0 3 2 G 0 0

STARTER OPTIONS DESIGNATOR

DESIGNATOR	OPTION* TERMINALS	AMMETER	VOLTMETER	CIRCUIT BREAKER	HIGH EMER. SUPPLY CAPACITY CIRCUIT BREAKER	GROUND FAULT PROTECTION
A	X					
B	X	X				
C	X		X			
D	X	X	X			
E				X		
F		X		X		
G			X	X		
H		X	X	X		
J					X	
K		X			X	
L			X		X	
M		X	X		X	
N				X		X
P		X		X		X
Q			X	X		X
R		X	X	X		X
S					X	X
T		X			X	X
U			X		X	X
V		X			X	X
W			X		X	X
Y		X	X		X	X
0	No Unit Mounted Starter					

* "X" indicates the option(s) provided

STARTER DESIGNATOR

DESIGNATOR	DESCRIPTION
0	Without Unit Mounted Starter
1	With Unit Mounted Starter

CONTROL PANEL OPTIONS DESIGNATOR

DESIGNATOR	OPTION* ELECTRIC CONTROL	PNEUMATIC CONTROL	NUMBER OF STARTS COUNTER	ELAPSED TIME METER	U L APPROVAL	C S A APPROVAL
A	X				X	
B	X					X
C	X					
D		X			X	
E		X				X
F		X				
G	X		X	X	X	
H	X		X	X		X
J	X		X	X		
K		X	X	X	X	
L		X	X	X		X
M		X	X	X		

* "X" indicates the option(s) provided

INSULATION AND PACKAGING DESIGNATOR

DESIGNATOR	INSULATION*	PACKAGING* STANDARD	PACKAGING* EXPORT
1	X	X	
2		X	
3	X		X
4			X

* "X" indicates the option(s) provided

ORIFICE DESIGNATOR

The CenTraVac computer selection program output will include the proper orifice designator to be used

AUXILIARY CONDENSER WATERSIDE WORKING PRESSURE DESIGNATOR

DESIGNATOR	CONNECTION TYPE	WORKING PRESSURE
A	Flanged	150 PSIG
B	Flanged	300 PSIG
C	Victaulic	150 PSIG
D	Victaulic	300 PSIG
0	No Auxiliary Condenser	

AUXILIARY CONDENSER CONNECTION ARRANGEMENT DESIGNATOR

DESIGNATOR	NUMBER OF PASSES	TYPE*	CONNECTION ARRANGEMENT* INLET RIGHT OR LEFT HAND	INLET END, FRONT, OR REAR	OUTLET RIGHT OR LEFT HAND	OUTLET END, FRONT OR REAR
A	1	M	—	F	—	F
B	1	M	—	R	—	R
C	1	M	LH	F	RH	R
C	1	M	RH	R	LH	F
D	1	M	LH	R	RH	F
D	1	M	RH	F	LH	R
E	2	M	LH	F	LH	F
F	2	M	LH	R	LH	R
G	2	M	RH	F	RH	F
H	2	M	RH	R	RH	R
J	2	M	LH	F	LH	R
K	2	M	LH	R	LH	F
L	2	M	RH	F	RH	R
M	2	M	RH	R	RH	F
V	1	NM	—	E	—	E
Z	2	NM	RH	E	RH	E
1	2	NM	LH	E	LH	E
0	No Auxiliary Condenser					

*Type M = Marine Type NM = Non-Marine Type
*Connection arrangement determined when facing control panel side of unit

AUXILIARY CONDENSER BUNDLE SIZE DESIGNATOR

DESIGNATOR*	Bundle Size
A	Standard
B	Large
0	No Auxiliary Condenser

* Standard copper tubes are denoted by designators "A" and "B". Availability and designation of additional tube materials or wall thicknesses will be provided by the factory upon request

HEAT RECOVERY CONDENSER WATERSIDE WORKING PRESSURE DESIGNATOR

DESIGNATOR	CONNECTION TYPE	WORKING PRESSURE
A	Flanged	150 PSIG
B	Flanged	300 PSIG
C	Victaulic	150 PSIG
D	Victaulic	300 PSIG
0	No Heat Recovery Condenser	

TABLE 1 — Compressor Motor Electrical Data

UNIT COMPRESSOR DESIGNATION	MOTOR DESIGNATOR	AVAILABLE MOTOR RATING (Kw)	NOMINAL VOLTAGE	200	208	440	460	480	575	600	2300	2400	4000	4160
			VOLTAGE UTILIZATION RANGE	187-220	187-229	414-506	414-506	414-506	540-633	540-660	2185-2530	2185-2640	3774-4370	3744-4576
CVHE 013-020	A	96	Rated Load Amps	314	302	142	136	130	107	103				
			Locked Rotor Amps	2154	2240	995	1040	1085	763	796				
	B	105	Rated Load Amps	342	329	155	148	142	117	112				
			Locked Rotor Amps	2154	2240	995	1040	1085	763	796				
	C	118	Rated Load Amps	379	364	172	164	157	131	126				
			Locked Rotor Amps	2154	2240	995	1040	1085	763	796				
	D	131	Rated Load Amps	419	403	190	182	174	146	140				
			Locked Rotor Amps	2154	2240	995	1040	1085	763	796				
	E	142	Rated Load Amps	464	446	210	201	193	159	152				
			Locked Rotor Amps	2862	2976	1239	1295	1351	958	1000				
	F	155	Rated Load Amps	503	484	228	218	209	173	166				
			Locked Rotor Amps	2862	2976	1239	1295	1351	958	1000				
	G	172	Rated Load Amps	553	532	251	240	230	192	184				
			Locked Rotor Amps	2862	2976	1239	1295	1351	958	1000				
CVHE 022-032	E	142	Rated Load Amps	464	446	203	196	188	159	152				
			Locked Rotor Amps	3014	3135	1349	1410	1471	1045	1090				
	F	155	Rated Load Amps	501	482	224	214	205	173	166				
			Locked Rotor Amps	3014	3135	1349	1410	1471	1045	1090				
	G	172	Rated Load Amps	551	530	248	237	227	192	184				
			Locked Rotor Amps	3014	3135	1349	1410	1471	1045	1090				
	H	184	Rated Load Amps	604	581	272	260	249	206	197				
			Locked Rotor Amps	4003	4163	1679	1755	1831	1272	1327				
	J	204	Rated Load Amps	662	637	299	286	274	228	218				
			Locked Rotor Amps	4003	4163	1679	1755	1831	1272	1327				
	K	230	Rated Load Amps	744	715	337	322	309	257	246				
			Locked Rotor Amps	4003	4163	1679	1755	1831	1272	1327				
	L	256	Rated Load Amps	820	788	373	357	342	286	274				
			Locked Rotor Amps	3880	4035	1720	1798	1876	1261	1316				
CVHE 035-050	J	204	Rated Load Amps	654	629	295	282	270	225	216				
			Locked Rotor Amps	4610	4794	1971	2060	2150	1466	1530				
	K	230	Rated Load Amps	732	704	333	318	305	254	243	63.9	61.2	36.7	35.3
			Locked Rotor Amps	4610	4794	1971	2060	2150	1466	1530	347	362	201	209
	L	256	Rated Load Amps	815	784	370	354	340	283	271	71.1	68.1	40.9	39.3
			Locked Rotor Amps	4610	4794	1971	2060	2150	1466	1530	347	362	201	209
	M	284	Rated Load Amps	916	881	415	397	380	316	303	79.2	75.9	45.6	43.8
			Locked Rotor Amps	4495	4675	2023	2115	2207	1550	1617	376	392	217	226
	N	323	Rated Load Amps	1037	997	469	449	430	359	344	90.1	86.3	51.8	49.8
			Locked Rotor Amps	4495	4675	2023	2115	2207	1550	1617	408	426	237	246
	P	361	Rated Load Amps			525	502	481	402	385	99.4	95.3	57.2	55.0
			Locked Rotor Amps			2023	2115	2207	1550	1617	485	506	281	292
	R	403	Rated Load Amps			580	555	532	445	426	111.8	107.1	64.3	61.8
			Locked Rotor Amps			2541	2657	2773	1954	2039	542	565	314	326

In all cases, the motor to be furnished must have a KW rating equal to or greater than the full load KW determined from the Trane Computer Program. Motor selections must correspond to the available component combinations tabulated in Table 13-1, page 13.

TABLE 2 — Motor Designators

AVAILABLE MOTOR RATINGS (Kw)	CVHE MOTOR DESIGNATOR	AVAILABLE VOLTAGES[1]	AVAILABLE MOTOR RATINGS (Kw)	CVHE MOTOR DESIGNATOR	AVAILABLE VOLTAGES[1]
96	A	X	284	M	Y
105	B	X	323	N	Y
118	C	X	361	P	Z
131	D	X	403	R	Z
142	E	X	453	T	Z
155	F	X	513	U	Z
172	G	X	586	V	Z
184	H	X	653	W	Z
204	J	X	742	X	Z
230	K	Y	853	Y	Z
256	L	Y	954	Z	Z

[1]NOTE: X = 200, 208, 440, 460, 480, 575, 600 volts
Y = 200, 208, 440, 460, 480, 575, 600, 2300, 2400, 4000, 4160 volts
Z = 440, 460, 480, 575, 600, 2300, 2400, 4000, 4160 volts

CENTRAVAC CONTROL SYSTEM

The Model CVHE CenTraVac is capable of continuous capacity modulation from 100% to 10% of full load at design conditions. This is achieved through the electronic control panel which is illustrated in Figure 1.

CONTROL PANEL

All safety and operating controls are housed in the CenTraVac control panel. The panel functions are divided into four categories, as indicated by the external panel layout:

1. Pressure indicating gauges have no operating function. They are used only to provide condenser, evaporator, lubricating oil and purge drum pressures.
2. System sequence status lights perform an important diagnostic function. A series of seven lights shows the progress of the CenTraVac starting sequence. As each of the seven circuit interlocks is verified, its individual pilot light comes on. Therefore, the reason for an aborted start can be determined by observing the pilot lights and determining the point at which the sequence was breached.
3. Five fault trip indicators display the status of each safety cutout control. Circuit interrupters are used to open the circuit instead of relays because they will hold their position in the event of power interruption. Therefore, power failure does not require the manual resetting of all safeties. Additional alarm contacts on each of the fault trip indicators are brought to a terminal strip for external connection.
4. The electronic capacity control system consists of three elements:

   a. Demand limiter
   b. Chilled water temperature control
   c. Manual inlet vane control and status

   The demand limiter control can be set to control at any value between 40 and 100 percent of motor full load current. Motor current is sensed by three current transformers and is processed into a proportional DC voltage by the CenTraVac motor overload. This same DC voltage is monitored by the demand limiter. When the set percentage of full load current is reached, the demand limiter prohibits further opening of the inlet vanes. If the setting is exceeded, the inlet vanes are moved toward the closed position.

   The chilled water temperature control module uses a solid state temperature sensor to sense chilled water temperature. Should this temperature vary from setpoint, an electronic controller sends a pulsed signal to the inlet vane actuator. A combination of proportional and floating control is used to provide high accuracy and low sensitivity (hunting).

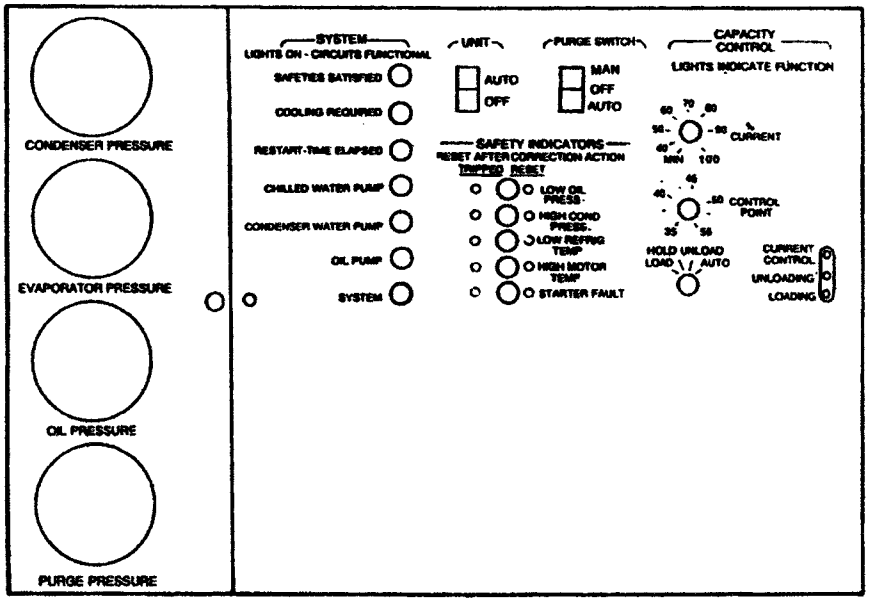

FIGURE 1 - Model CVHB CenTraVac Chiller Control Panel

Electronic Control System
(Refer to Figure 2)

A1 (line 9) is an electronic overload relay. Its purpose is to monitor the current draw of the compressor and to de-energize the compressor starter if the current draw exceeds the setting of A1. (A1 should be set at 105% of FLA.)

A3 (line 39) is the compressor inlet vane actuator electric motor. A3 end switch (line 26) is closed when the inlet vanes are full closed. A3 limit switch (line 38) is open when the inlet vanes are full open. A3 limit switch (line 40) is open when the inlet vanes are full closed.

S4 (line 35) is a multi-program timer. It limits the compressor to one start every 30 minutes and also provides the "start" signal to the compressor starter. S9 (line 43) is the oil pump timer. It keeps the oil pump motor energized for 7 minutes after the compressor starter is de-energized to provide lubrication during compressor coast-down.

U1 (line 37) is the capacity control module. It modules the inlet vane actuator (A3, line 39) in response to leaving water temperature as sensed by sensor U3 (line 38). U1 also serves as a load limiting device thru an input signal from the electronic overload relay. Power must be applied to terminal 84 (line 40) before U1 can open the inlet vanes.

U2 (line 35) is the compressor motor high temperature cut-out. Its M1-M2 contacts will close shortly after 115V is applied to terminals T1 and T2.

Sequence of Operation for Typical Start-Up
(Refer to Figure 2)

Energize the chilled water pump starter K12 (line 13).

Close the circuit breaker CB10 (line 1). Since the contacts of U2 (line 35) do not close instantly, relay K11 (line 36) will not be energized in time to prevent fault trip indicator CB4 (line 16) from tripping. After approximately one second delay, U2 contacts will close energizing K11. Reset CB4. Set switch S6 (line 26) in the "auto" position.

Control power flows thru the safety controls and fault trip indicator contacts (line 16). If all safeties are satisfied, light DS1 (line 20) will light. Power flows on to the chilled water demand switch S3 (line 26) whose temperature sensing element is located in the return water entering the chiller. Upon a rise in return water temperature, S3 closes energizing light DS2 (line 20) and feeding power to timer contact S4. If 30 minutes or more has elapsed since the previous compressor start, timer contact S4 (line 26) feeds power to light DS3 (line 20). Power also flows through compressor inlet vane end switch A3 (if vanes are closed), through relay K7 contacts (if compressor is off) to terminal 8. If chilled water flow is proven, power feeds thorugh flow switch S5 to light DS4 (line 20). Power also feeds through switch S6 energizing relay K4 (line 19). K4 contacts (line 16) close to energize the condenser water pump starter, K13; if condenser water flow is proven, power feeds through flow switch S7 (line 26) to light DS5 (line 20) and also energizes relay K5 (line 21). One set of K5 contacts (line 43) close energizing the oil pump timer S9. A second set of K5 contacts (line 28) close keeping the control circuit complete by jumpering out the start inhibit functions. In 40 seconds timer S9 contacts (line 44) close energizing the oil pump motor B2 (line 45). When oil pressure is established, oil pressure switch S8 (line 26) closes lighting DS6 (line 22) and energizing relay K6 (line 23). One set of K6 SPDT contacts (lines 14 and 15) switch energizing relay K3 (line 14). K3 contacts (line 16) close keeping relay K3 energized and arming the low oil pressure circuit breaker circuit.

A second K6 contact (line 35) closes energizing timer S4 (line 35). In 20 seconds S4 contacts (line 33) close keeping timer S4 energized through its entire timing cycle. 5 seconds later S4 contacts (line 28) close feeding power to light DS7 (line 28 and energizing comrpessor starter K1 (line 29). K1 contacts (line 30) close keeping power on K1. A second set of contact of K1 (line 31) close energizing relay K10 (line 33). K10 contacts (line 31) close keeping K10 energized for the remaining timing cycle of S4. A second K10 contact (line 29) opens removing the "start" signal from the K1 relay circuit. Thus the "start" signal lasts only long enough to energize and close K1 start contactor.

A third K1 start contact (line 45) closes keeping the oil pump motor energized as long as the K1 start contactor remains closed.

When K1 connects the compressor in the run configuration, K1 "run" contacts (line 40) close feeding power to terminal 84 of the capacity control module U1 (line 40) (if refrigerant temperature switch S2 is closed) thus allowing U1 to open the compressor inlet vanes as necessary.

When K1 is initially energized, relay K9 (line 26) is also energized. K9 contacts (line 25) open keeping relay K8 de-energized. This arms the starter fault safety circuit 15 seconds after the initial start pulse is sent to K1. S4 contacts (line 26) switch from 13-81 to 13-79 energizing relay K7 (line 24). K7 contacts (line 26) close keeping K7 energized and completing the arming of the starter fault circuit. If K1 opens for any reason, contacts K1 (line 29) open de-energizing relay K9. K9 contacts (line 26) close energizing relay K8. K8 contacts (line 15) close tripping fault trip indicator CB5 and locking the unit off. When there is no longer a call for cooling or if a safety opens, compressor starter K1 and relay K5 will be de-energized. A contact of timer S9 (line 44) will keep timer S9 and oil pump motor B2 energized for 7 minutes to provide lubrication during compressor coast-down.

If there is a loss of oil pressure while the compressor is running, oil pressure switch S8 (line 26) opens stopping the compressor and de-energizing relay K6 (line 23). Power then feeds from terminal 12 (line 26) through contacts of K3 (line 16) and NC contacts of K6 (line 14) to trip fault trip indicator CB1 locking the compressor off.

Alarm contacts (line 56) are factory wired using NC contacts of the control circuit breakers. NO alarm contacts may be used by moving one wire on each circuit breaker.

FREE COOLING

Free Cooling is an accessory to the Trane Model CVHB CenTraVac Chiller. Free cooling adapts the basic chiller to function as a simple heat exchanger using refrigerant as the working fluid. When condenser water is available at temperatures lower than the desired chilled liquid temperature, Free Cooling can provide up to 45 percent of nominal chiller capacity without operation of the compressor. This feature can result in substantial energy cost savings on many installations.

Operation

Free Cooling operates on the principle that refrigerant flows to the area of lowest temperature in the system. When condenser water is available at a temperature lower than the required leaving chilled water temperature, the operator stops the compressor and starts the Free Cooling cycle by a simple pushbutton control. Changeover back to mechanical cooling is also by simple pushbutton control.

The Free Cooling accessory consists of the following factory-installed or supplied components:

1. A refrigerant gas line, including an electrically actuated shutoff valve, installed between the evaporator and condenser.
2. A valved liquid return line including an electrically actuated shutoff valve, between the condenser sump and evaporator.
3. A liquid refrigerant storage vessel.
4. Added refrigerant charge.
5. Free Cooling changeover controls.

Upon changeover to Free Cooling, the shutoff valve in the liquid and gas lines open and a lockout circuit prevents compressor energization. Liquid refrigerant drains by gravity from the storage tank into the evaporator, flooding the tube bundle. Since the refrigerant temperature and pressure will be higher in the evaporator than in the condenser due to the water temperature difference, the refrigerant vaporized in the evaporator flows to the condenser. The gas then is condensed by the effects of the cooling tower water and flows by gravity back to the evaporator. This automatic refrigeration cycle is sustained as long as a temperature difference exists between the condenser and evaporator liquids.

The difference in temperature between the condenser water and evaporator water determines the rate of refrigerant flow between the two shells and hence the Free Cooling capacity.

If the system load becomes greater than the Free Cooling available capacity, the operator stops Free Cooling operation. The gas and liquid valves close and compressor operation begins. Refrigerant gas is drawn out of the evaporator by the compressor and is compressed and discharged to the condenser. Most of the condensed liquid first takes the path of least resistance by flowing into the storage tank which is vented to the economizer sump through a small bleed line. When the storage tank is full, liquid refrigerant must flow through the bleed line restriction. The pressure drop through the bleed line is greater than that through the orifice flow control device, hence liquid refrigerant flows normally from the condenser through the orifice system and into the economizer.

During changeover to mechanical cooling, the refrigerant transfer process requires less than three minutes. The loading ramp prevents carryover by slowly loading the machine.

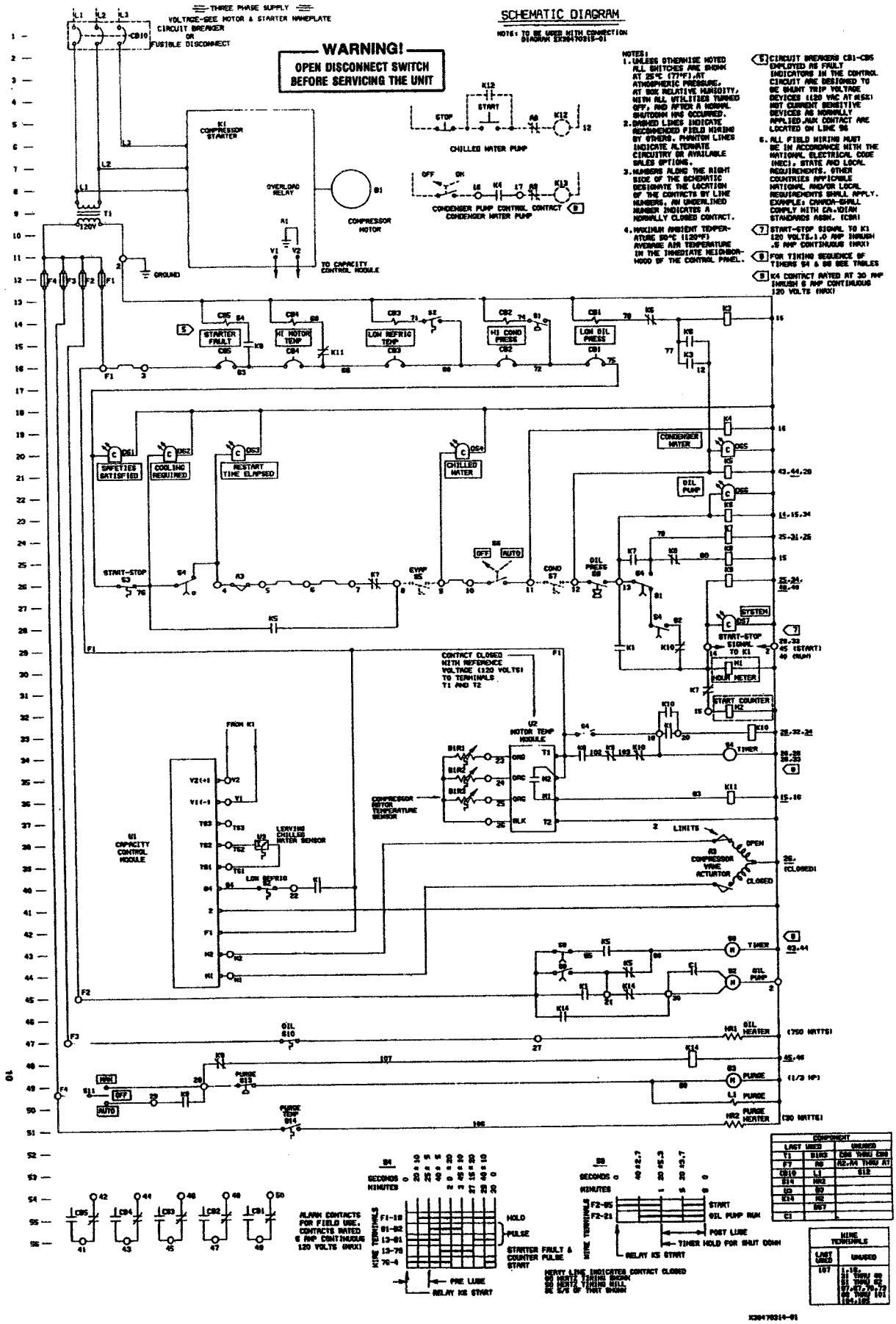

FIGURE 2 - Typical Schematic Diagram, Electric Capacity Control

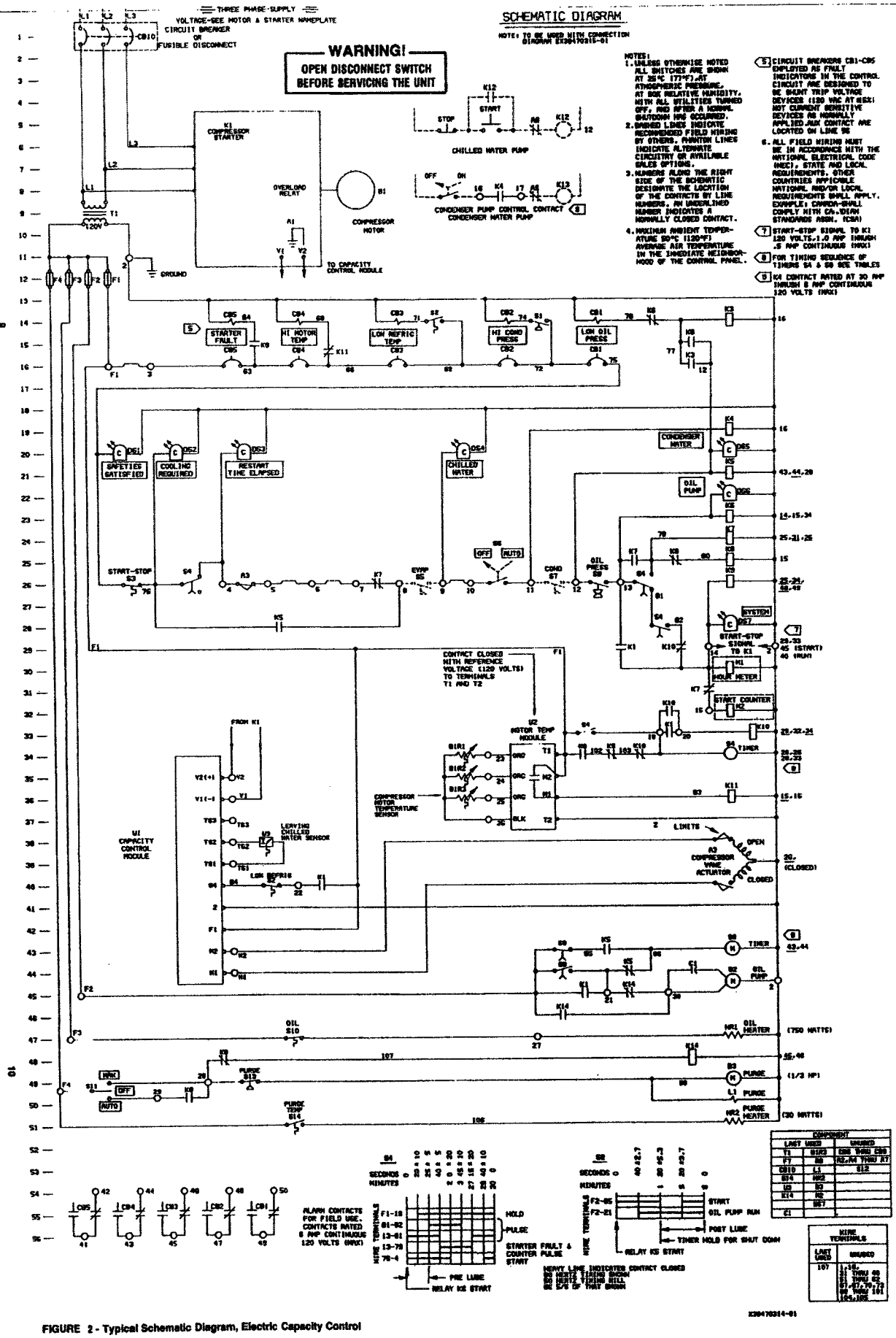

FIGURE 2 - Typical Schematic Diagram, Electric Capacity Control

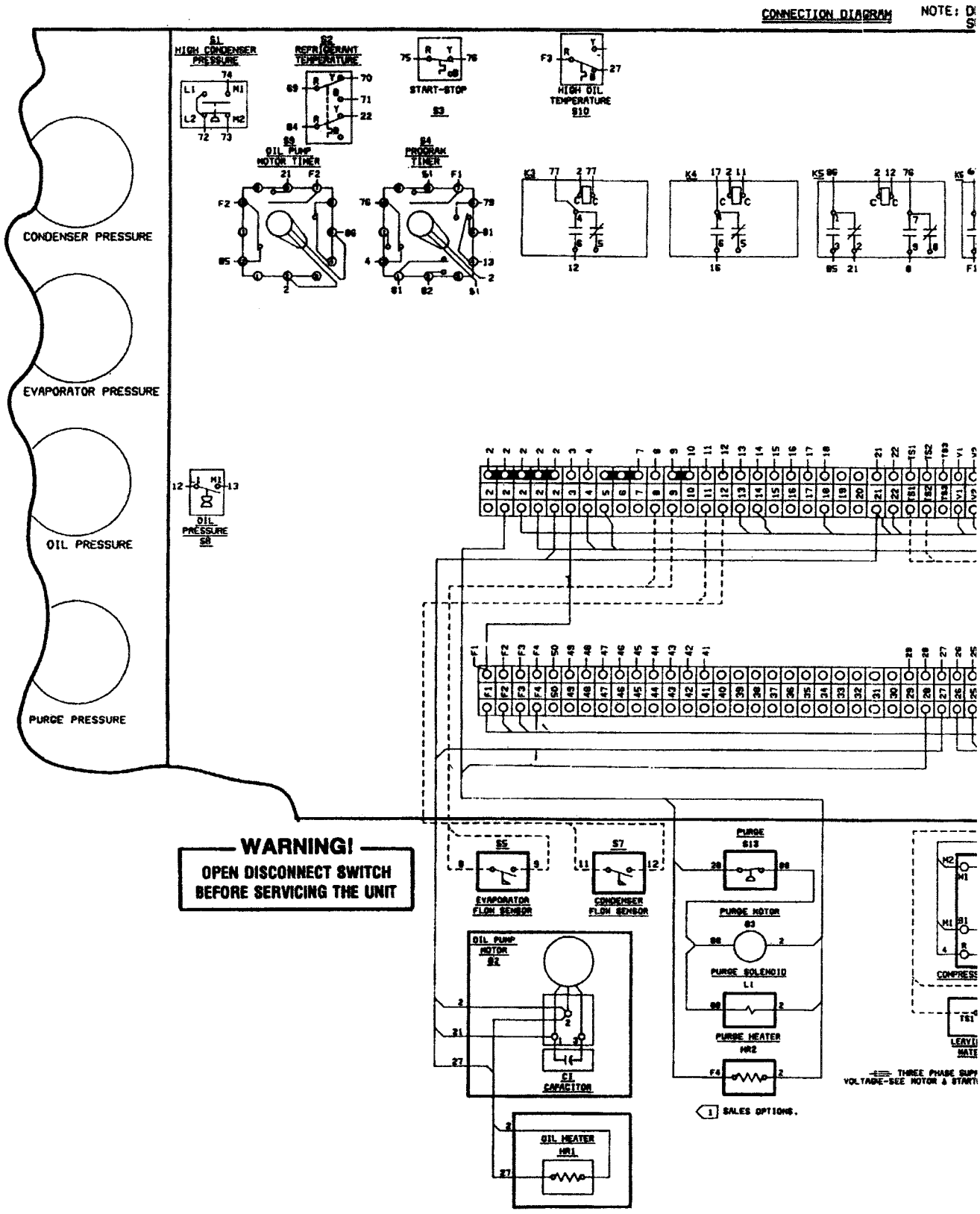

FIGURE 3 - Typical Field Connection Diagram, Electric Capacity Control

N DIAGRAM NOTE: DESIGNED TO BE USED WITH SCHEMATIC SUBMITTAL CVHE-S/W-276

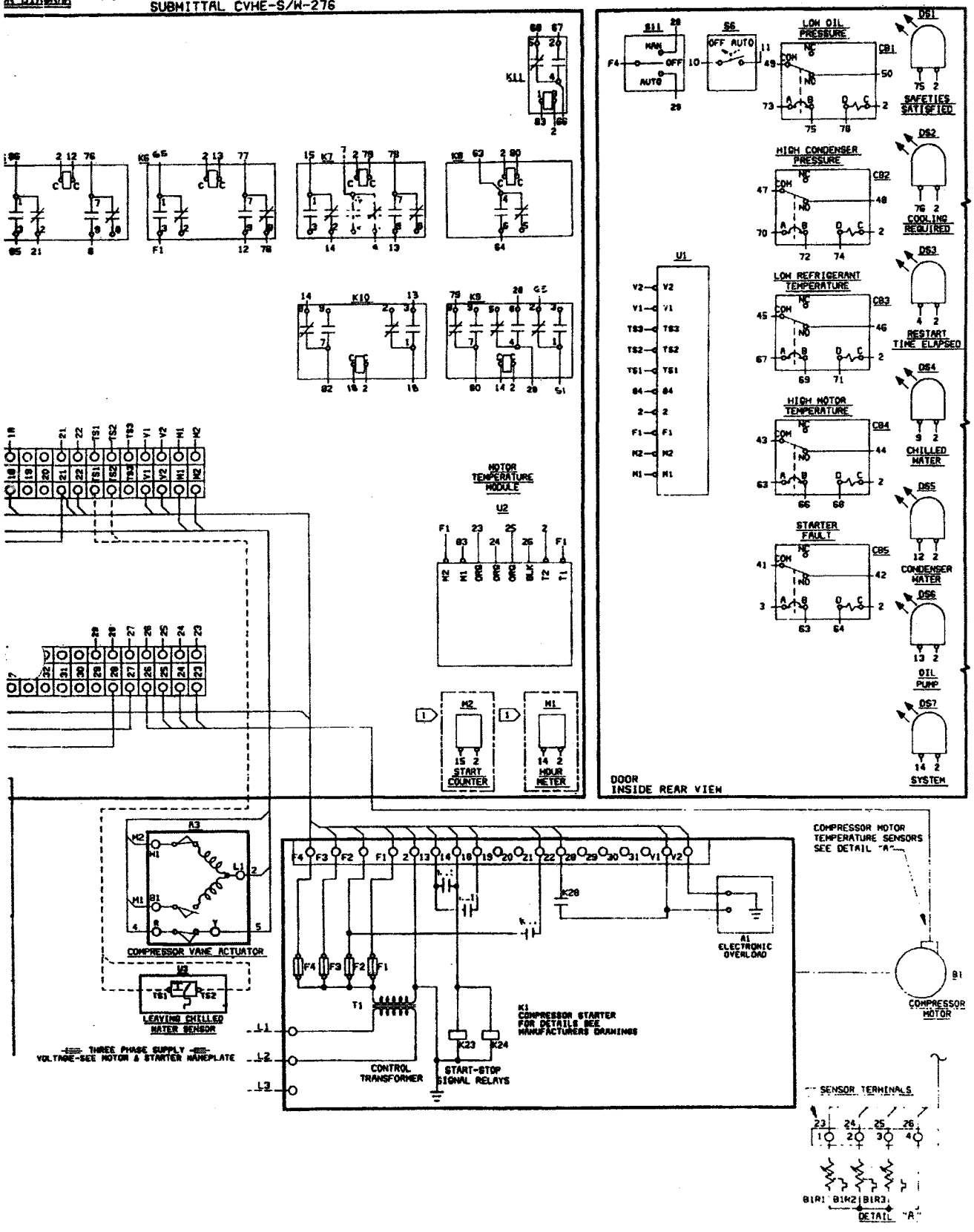

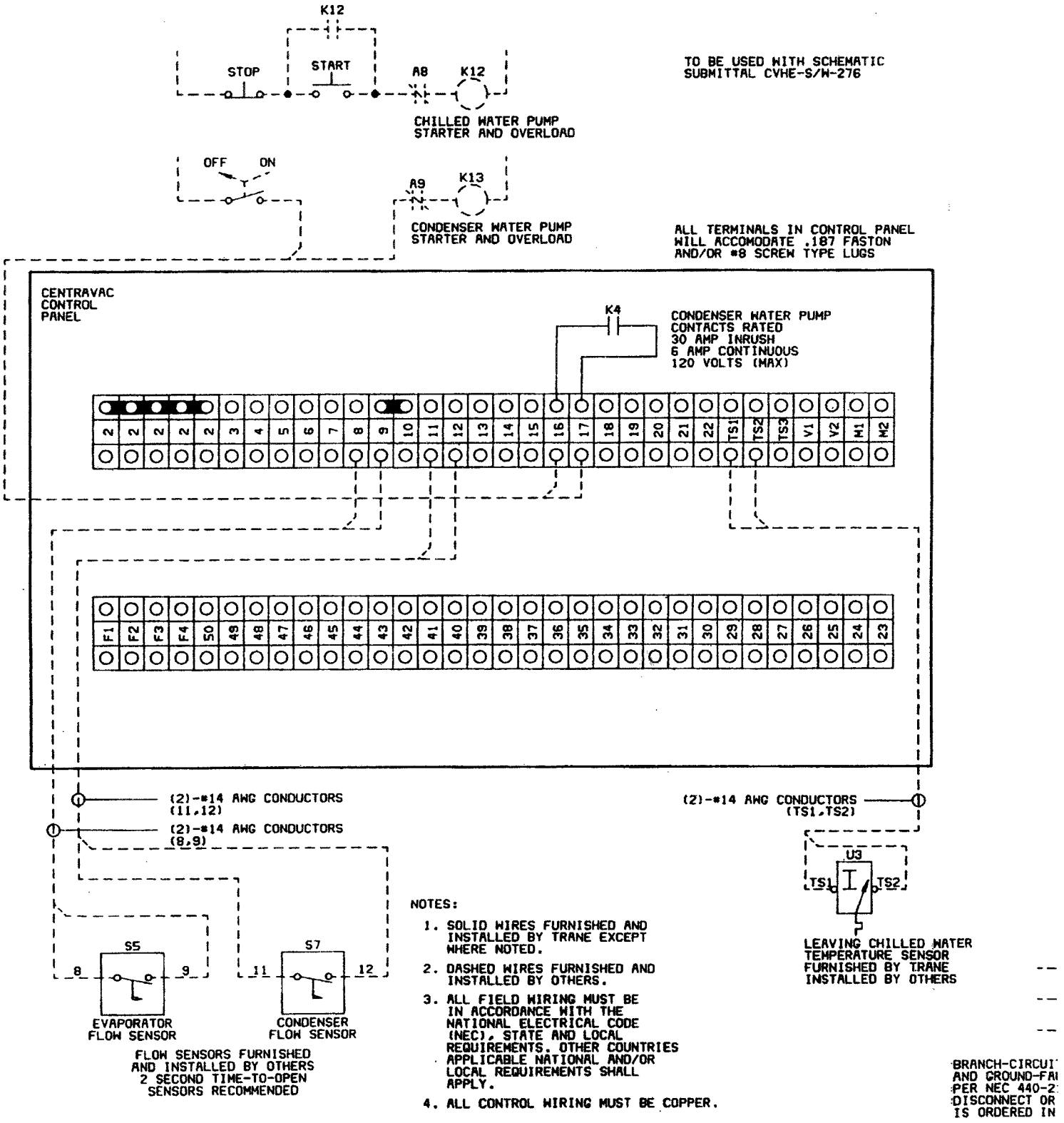

FIGURE 4 - Typical Field Connection Diagram, Electric Capacity Control, Unit Mounted Starter

MIN. WIRE SIZE COPPER 75°C	WIRE SELECTION TABLE (REF. NEC 1981) RATED LOAD CURRENT (NAMEPLATE)				
	SUPPLY LEADS OR MOTOR LEADS FOR ACROSS-THE-LINE OR AUTO-TRANS STARTER			MOTOR LEADS FOR STAR DELTA STARTER	
	1 CONDUIT 3 WIRES	2 CONDUITS 3 WIRES EA	1 CONDUIT 6 WIRES	2 CONDUITS 3 WIRES EA	1 CONDUIT 6 WIRES
8	40	80	64.0	69.2	55.4
6	52	104	83.2	90.0	72.0
4	68	136	108.8	117.6	94.1
3	80	160	128.0	138.4	110.7
2	92	180	147.2	159.2	127.3
1	104	208	166.4	179.9	143.9
0	120	240	192.0	207.6	166.1
00	140	280	224.0	242.2	193.8
000	160	320	256.0	276.8	121.4
0000	184	368	294.4	318.3	254.7
250	204	408	326.4	352.9	282.3
300	228	456	364.8	394.4	315.6
350	248	496	396.8	429.0	343.2
400	268	536	428.8	463.6	370.9
500	304	608	486.4	525.9	420.7
600	336	672	537.6	581.3	465.0

ALL WIRING NOT SHOWN FURNISHED AND INSTALLED BY TRANE

WARNING!

OPEN DISCONNECT SWITCH BEFORE SERVICING THE UNIT

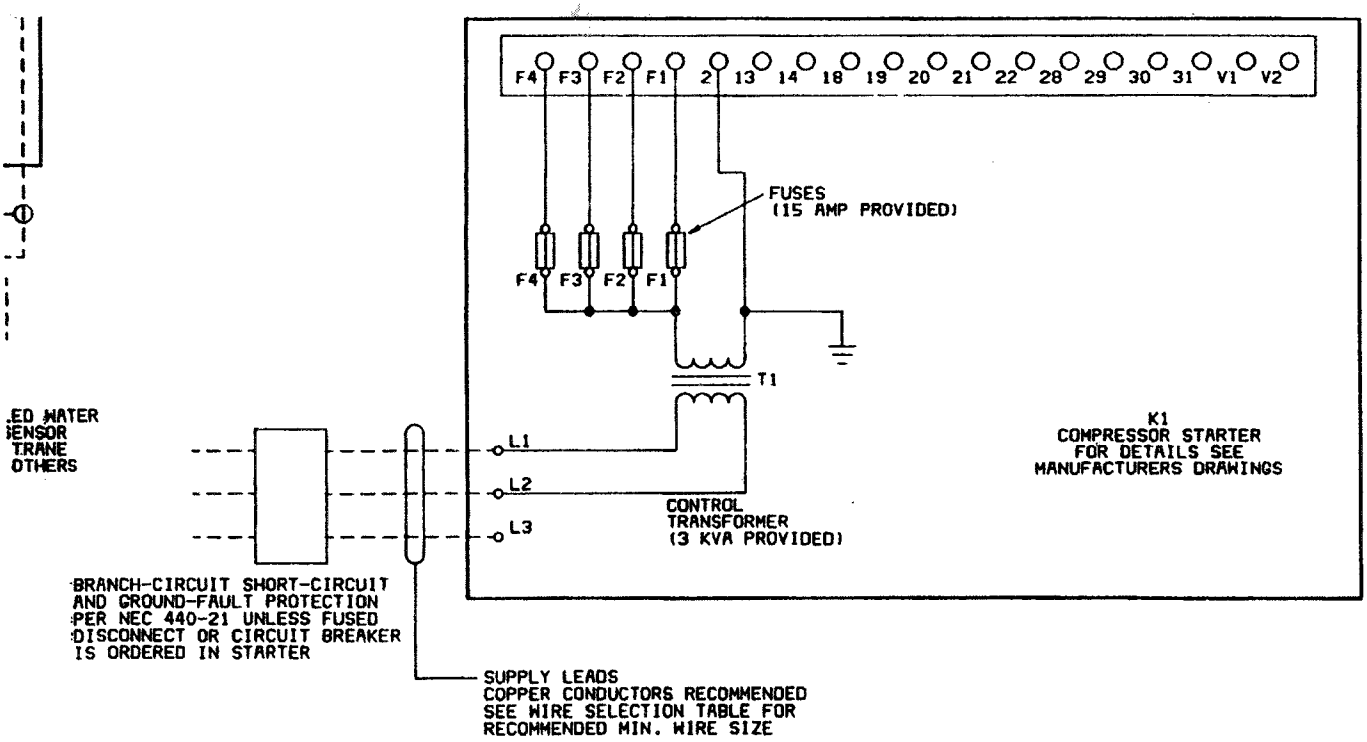

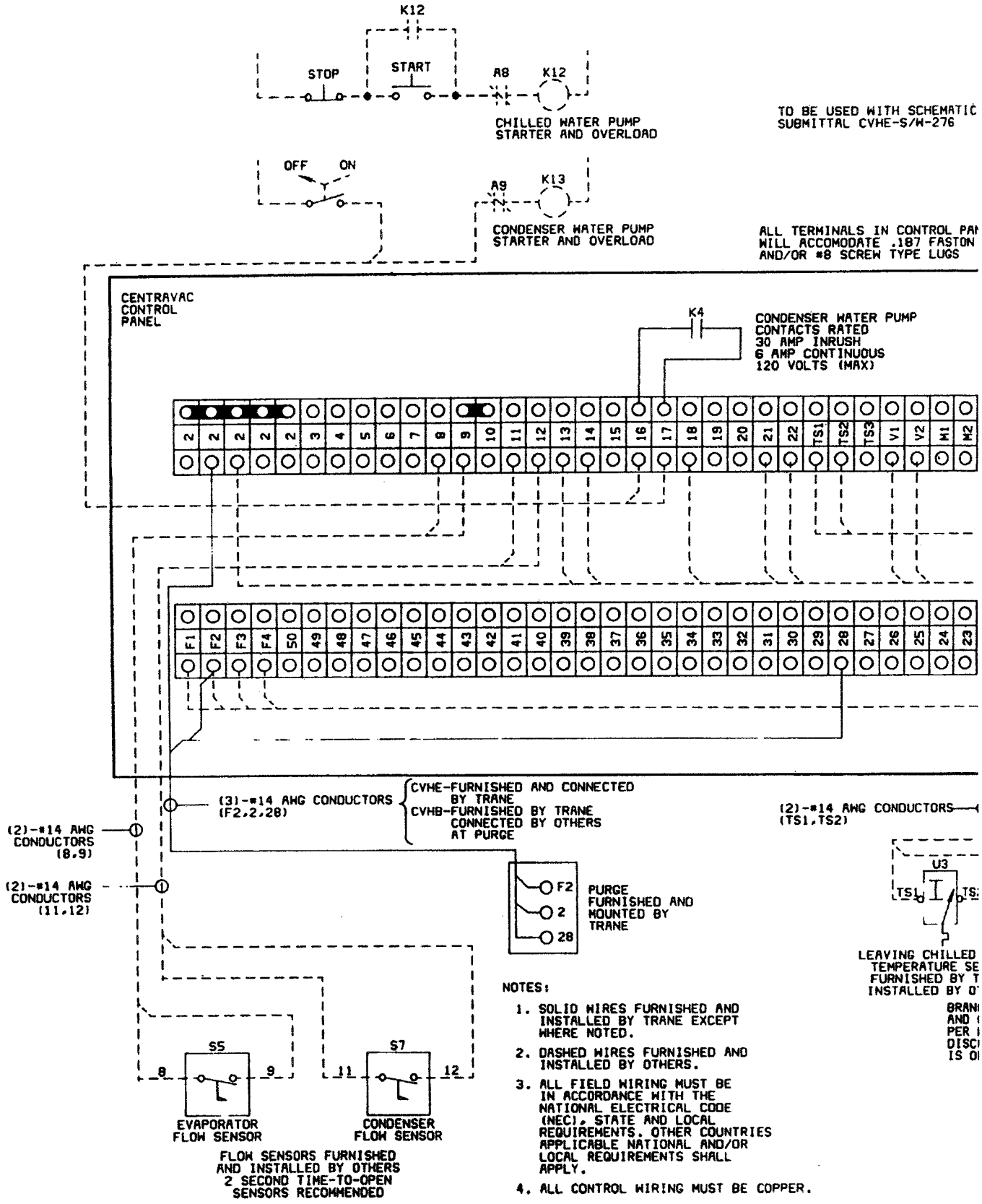

FIGURE 5 - Typical Field Connection Diagram, Electric Capacity Control, Remote Starter

ISED WITH SCHEMATIC
AL CVHE-S/W-276

NALS IN CONTROL PANEL
MODATE .187 FASTON
SCREW TYPE LUGS

WATER PUMP
RATED
RUSH
TINUOUS
(MAX)

WIRE SELECTION TABLE (REF. NEC 1981)					
	RATED LOAD CURRENT (NAMEPLATE)				
MIN. WIRE SIZE COPPER 75°C	SUPPLY LEADS OR MOTOR LEADS FOR ACROSS-THE-LINE, AUTO-TRANS STARTER OR PRIMARY REACTOR STARTER			MOTOR LEADS FOR STAR DELTA STARTER	
	1 CONDUIT 3 WIRES	2 CONDUITS 3 WIRES EA	1 CONDUIT 6 WIRES	2 CONDUITS 3 WIRES EA	1 CONDUIT 6 WIRES
8	40	80	64.0	69.2	55.4
6	52	104	83.2	90.0	72.0
4	68	136	108.8	117.6	94.1
3	80	160	128.0	138.4	110.7
2	92	180	147.2	159.2	127.3
1	104	208	166.4	179.9	143.9
0	120	240	192.0	207.6	166.1
00	140	280	224.0	242.2	193.8
000	160	320	256.0	276.8	121.4
0000	184	368	294.4	318.3	254.7
250	204	408	326.4	352.9	282.3
300	228	456	364.8	394.4	315.6
350	248	496	396.8	429.0	343.2
400	268	536	428.8	463.6	370.9
500	304	608	486.4	525.9	420.7
600	336	672	537.6	581.3	465.0

ALL WIRING NOT SHOWN
FURNISHED AND INSTALLED
BY TRANE

WARNING!
OPEN DISCONNECT SWITCH BEFORE SERVICING THE UNIT

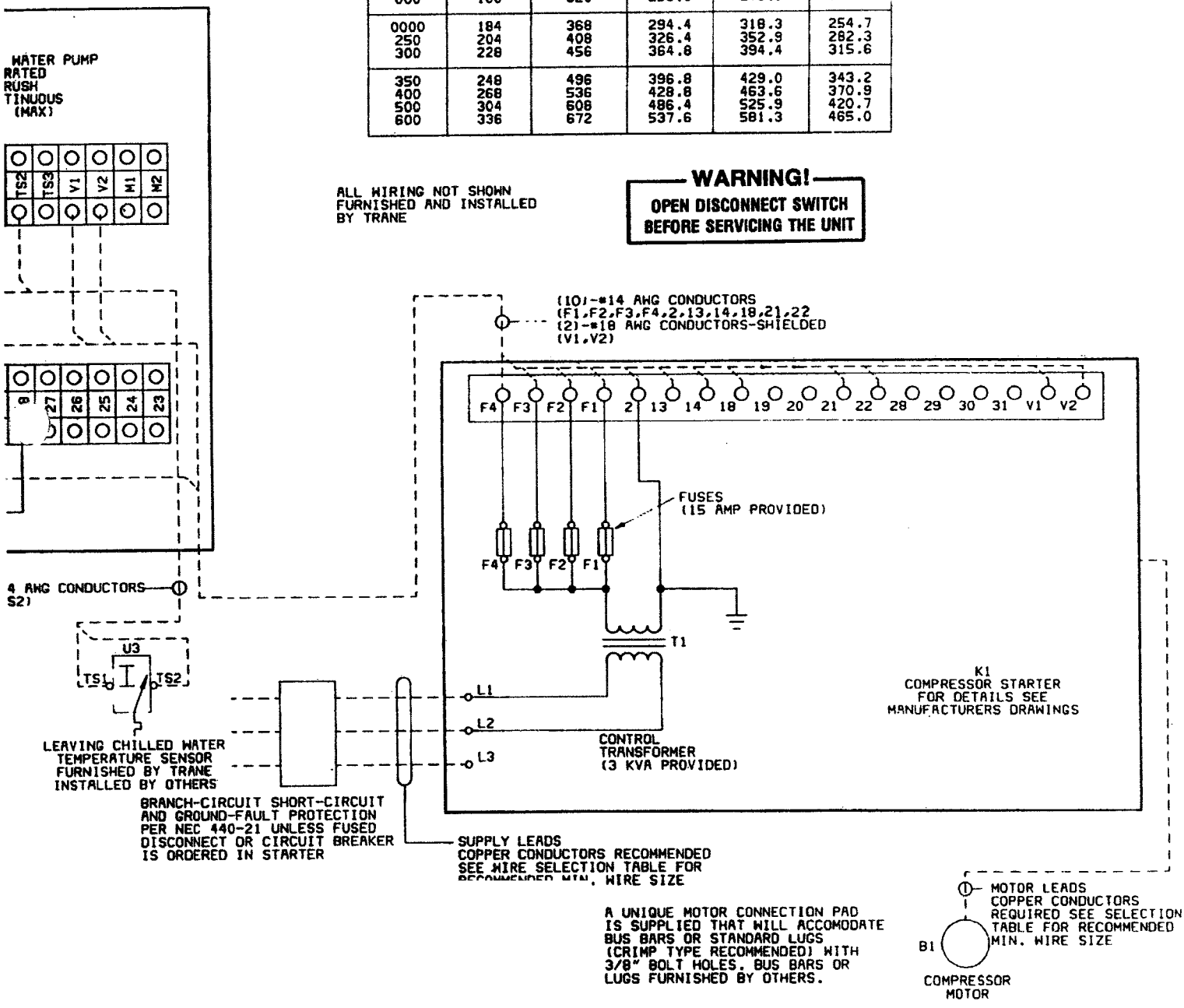

A UNIQUE MOTOR CONNECTION PAD
IS SUPPLIED THAT WILL ACCOMODATE
BUS BARS OR STANDARD LUGS
(CRIMP TYPE RECOMMENDED) WITH
3/8" BOLT HOLES. BUS BARS OR
LUGS FURNISHED BY OTHERS.

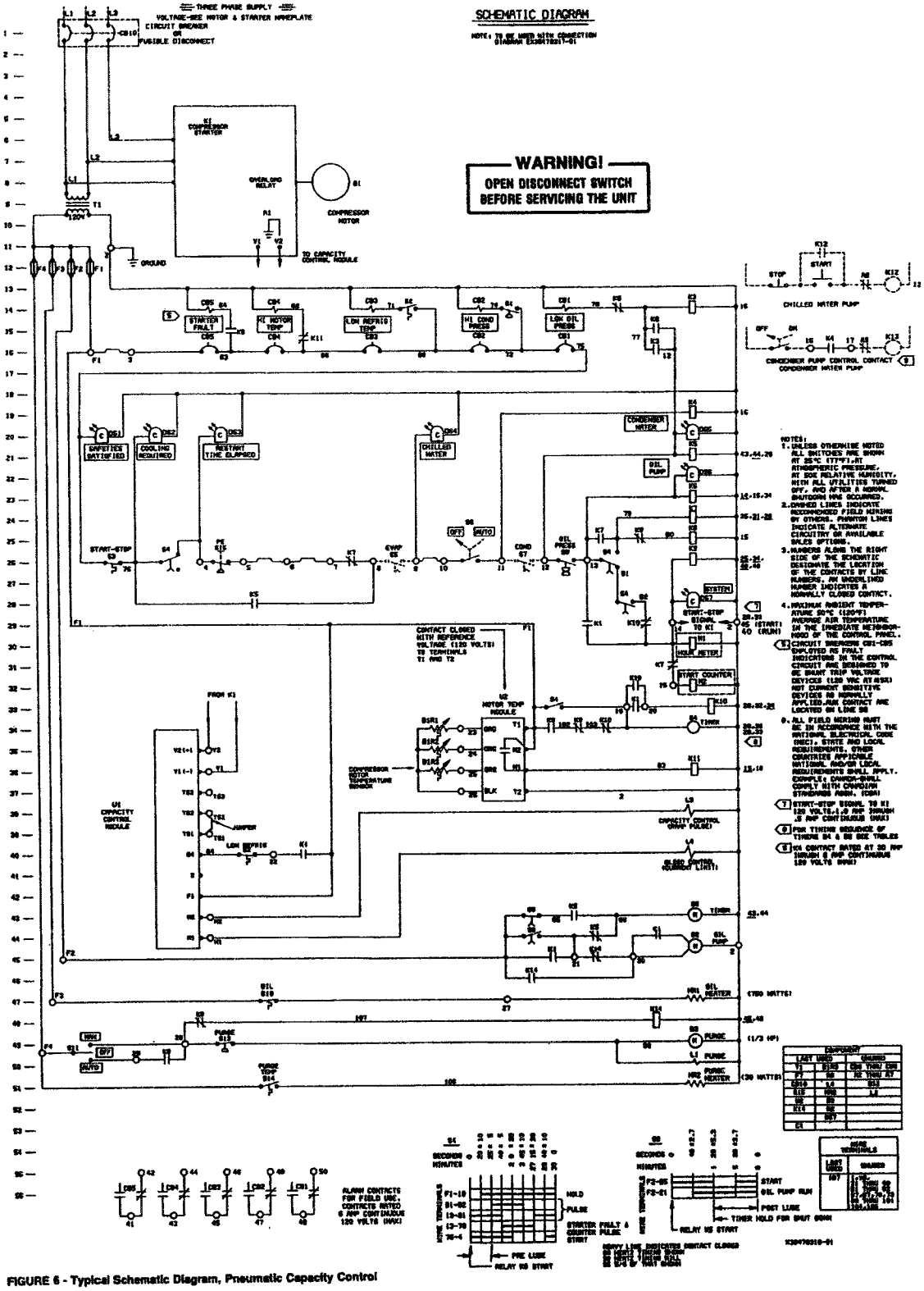

FIGURE 6 - Typical Schematic Diagram, Pneumatic Capacity Control

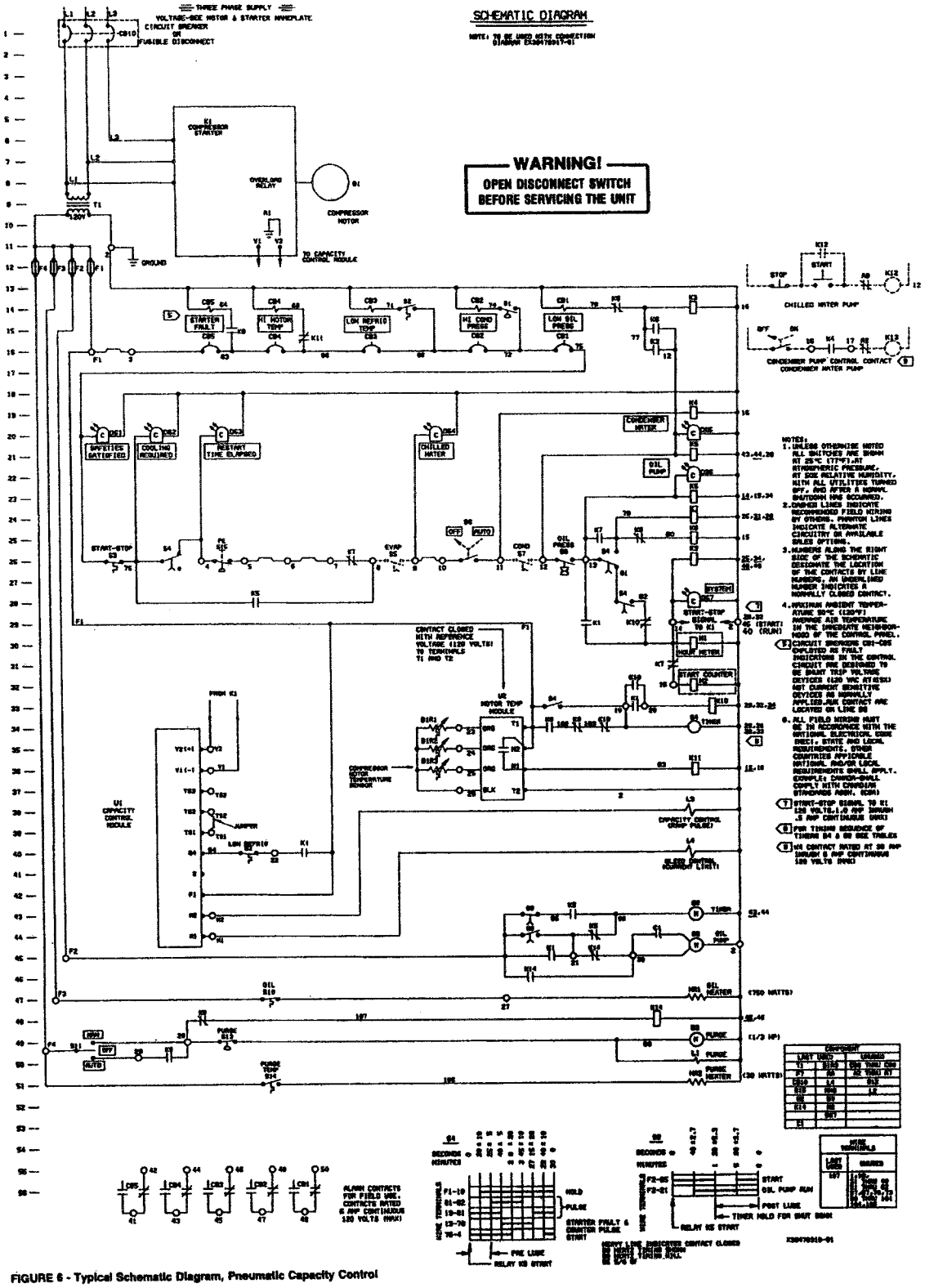

FIGURE 6 - Typical Schematic Diagram, Pneumatic Capacity Control

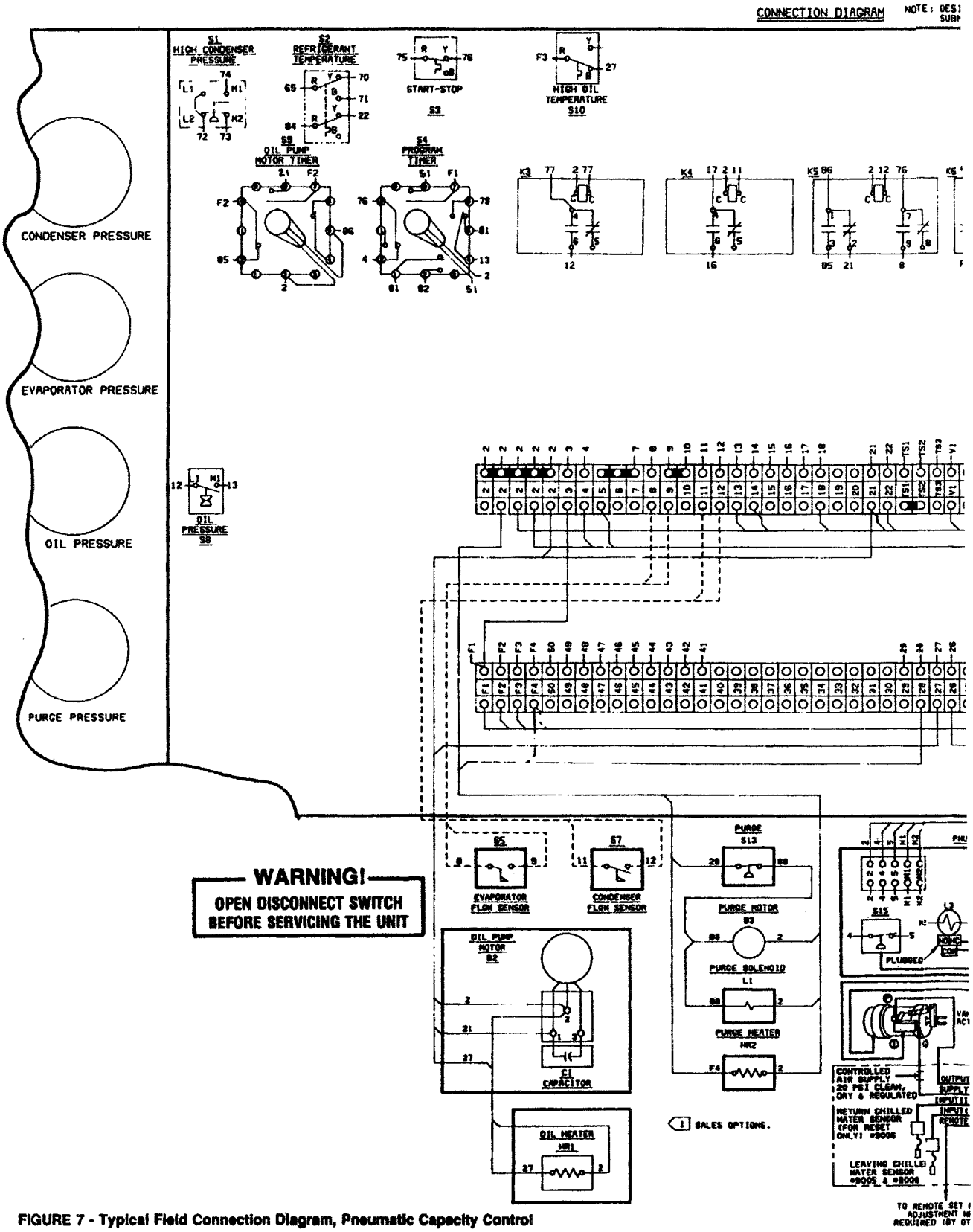

FIGURE 7 - Typical Field Connection Diagram, Pneumatic Capacity Control

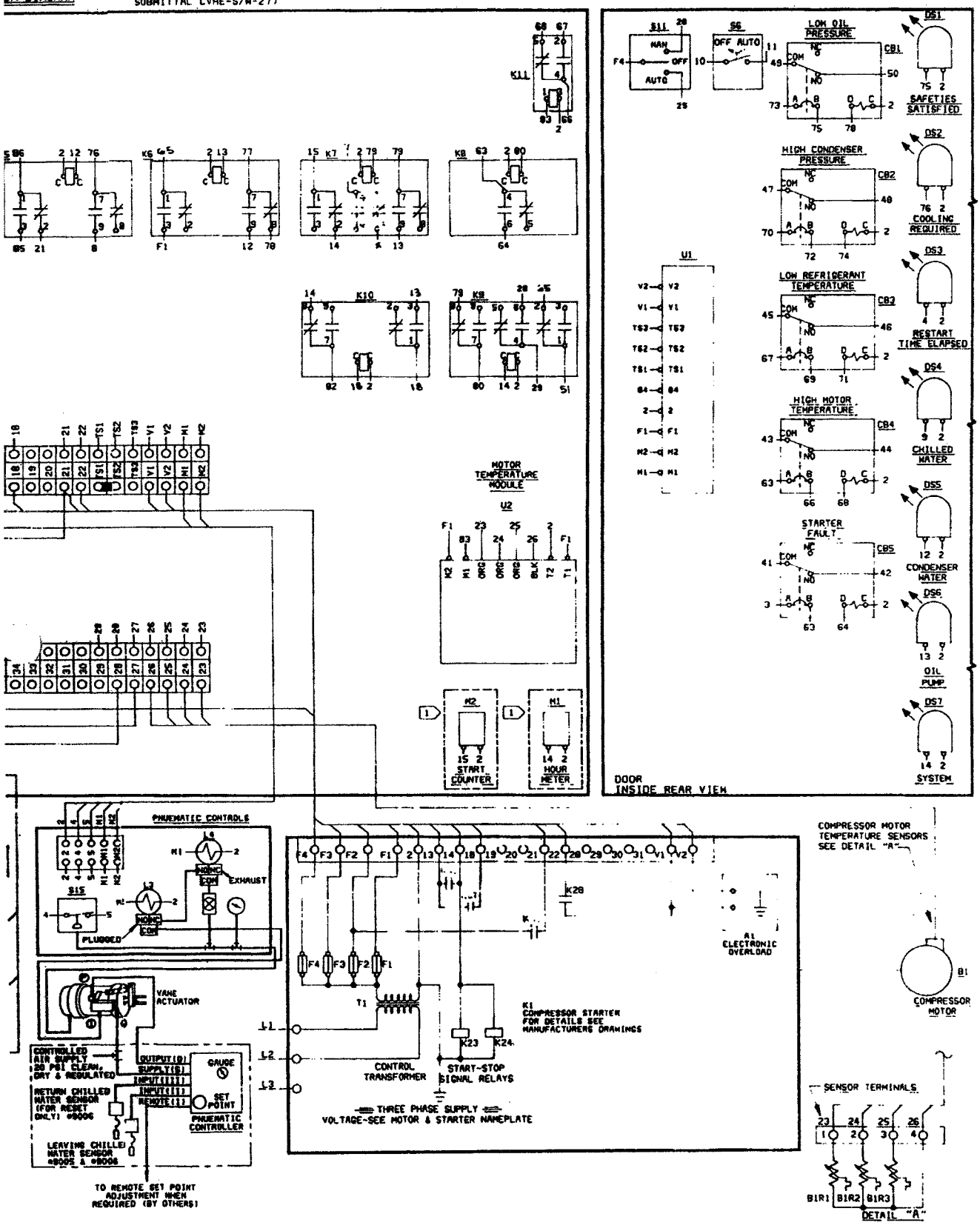
DN DIAGRAM
NOTE: DESIGNED TO BE USED WITH SCHEMATIC SUBMITTAL CVHE-S/M-277
K11
S11
MAN
OFF
AUTO
S6
OFF AUTO
LOW OIL PRESSURE
CB1
DS1
SAFETIES SATISFIED
HIGH CONDENSER PRESSURE
CB2
DS2
COOLING REQUIRED
LOW REFRIGERANT TEMPERATURE
CB3
DS3
RESTART TIME ELAPSED
HIGH MOTOR TEMPERATURE
CB4
DS4
CHILLED WATER
STARTER FAULT
CB5
DS5
CONDENSER WATER
DS6
OIL PUMP
DS7
SYSTEM
U1
MOTOR TEMPERATURE MODULE
U2
M2
START COUNTER
M1
HOUR METER
DOOR
INSIDE REAR VIEW
PNUEMATIC CONTROLS
EXHAUST
PLUGGED
VANE ACTUATOR
CONTROLLED AIR SUPPLY 20 PSI CLEAN, DRY & REGULATED
RETURN CHILLED WATER SENSOR (FOR RESET ONLY) #8006
LEAVING CHILLED WATER SENSOR #8005 & #8006
GAUGE
SET POINT
PNUEMATIC CONTROLLER
TO REMOTE SET POINT ADJUSTMENT WHEN REQUIRED (BY OTHERS)
K28
A1
ELECTRONIC OVERLOAD
T1
CONTROL TRANSFORMER
K23
K24
START-STOP SIGNAL RELAYS
K1
COMPRESSOR STARTER
FOR DETAILS SEE MANUFACTURERS DRAWINGS
THREE PHASE SUPPLY
VOLTAGE-SEE MOTOR & STARTER NAMEPLATE
COMPRESSOR MOTOR TEMPERATURE SENSORS SEE DETAIL "A"
B1
COMPRESSOR MOTOR
SENSOR TERMINALS
B1R1
B1R2
B1R3
DETAIL "A"

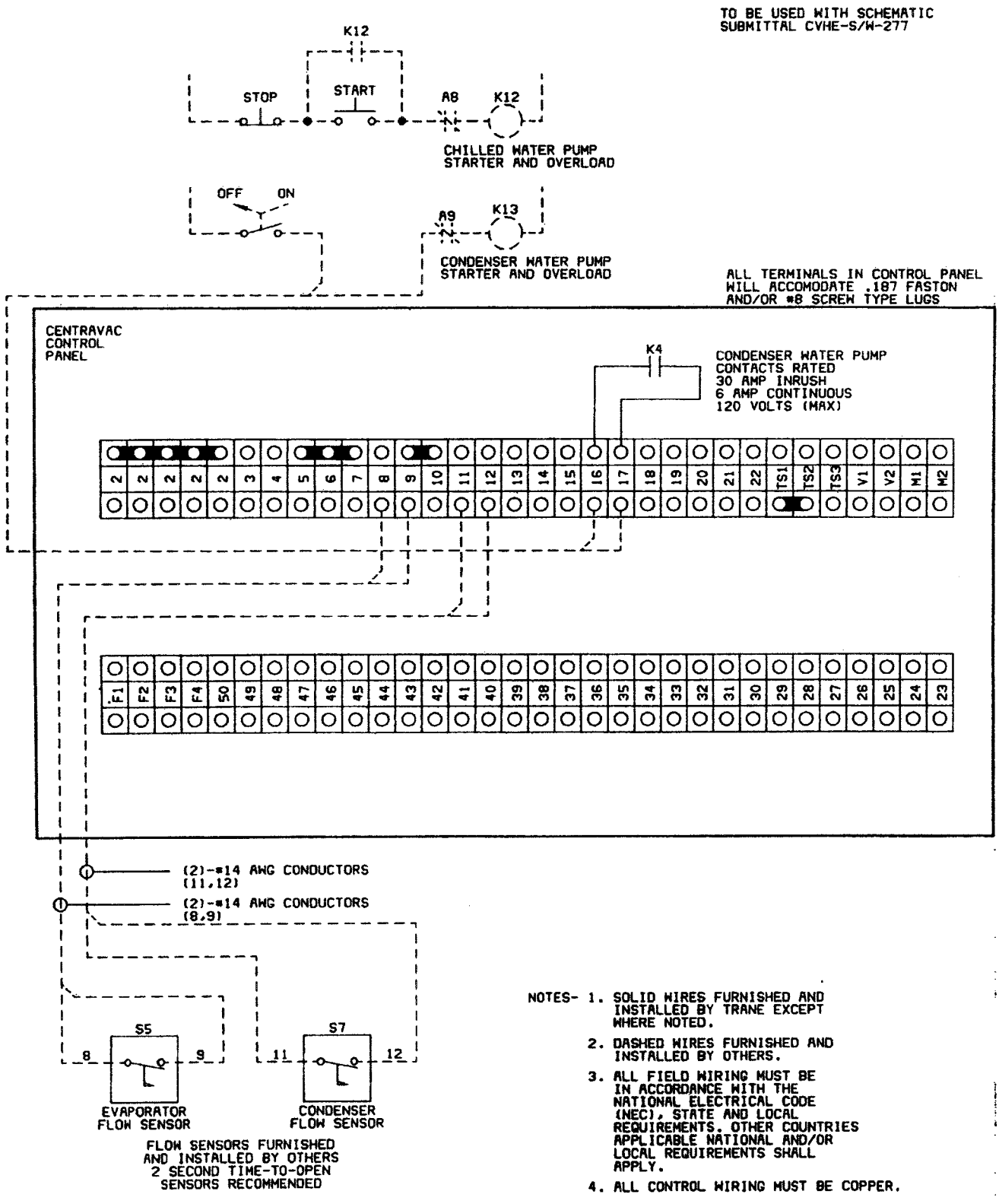

FIGURE 8 - Typical Field Connection Diagram, Pneumatic Capacity Control, Unit Mounted Starter

MIN. WIRE SIZE COPPER 75°C	WIRE SELECTION TABLE (REF. NEC 1981) RATED LOAD CURRENT (NAMEPLATE)				
	SUPPLY LEADS OR MOTOR LEADS FOR ACROSS-THE-LINE OR AUTO-TRANS STARTER			MOTOR LEADS FOR STAR DELTA STARTER	
	1 CONDUIT 3 WIRES	2 CONDUITS 3 WIRES EA	1 CONDUIT 6 WIRES	2 CONDUITS 3 WIRES EA	1 CONDUIT 6 WIRES
8	40	80	64.0	69.2	55.4
6	52	104	83.2	90.0	72.0
4	68	136	108.8	117.6	94.1
3	80	160	128.0	138.4	110.7
2	92	180	147.2	159.2	127.3
1	104	208	166.4	179.9	143.9
0	120	240	192.0	207.6	166.1
00	140	280	224.0	242.2	193.8
000	160	320	256.0	276.8	121.4
0000	184	368	294.4	318.3	254.7
250	204	408	326.4	352.9	282.3
300	228	456	364.8	394.4	315.6
350	248	496	396.8	429.0	343.2
400	268	536	428.8	463.6	370.9
500	304	608	486.4	525.9	420.7
600	336	672	537.6	581.3	465.0

NEL

ALL WIRING NOT SHOWN FURNISHED AND INSTALLED BY TRANE

WARNING!
OPEN DISCONNECT SWITCH BEFORE SERVICING THE UNIT

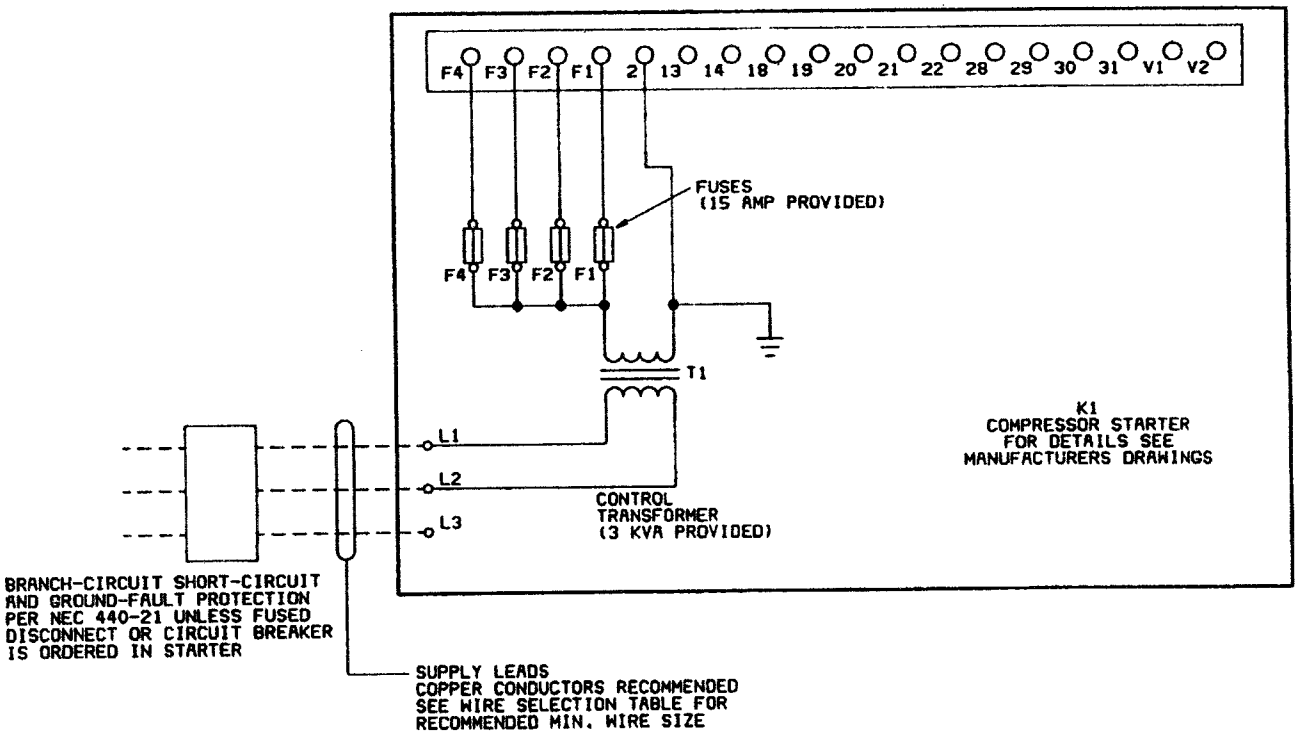

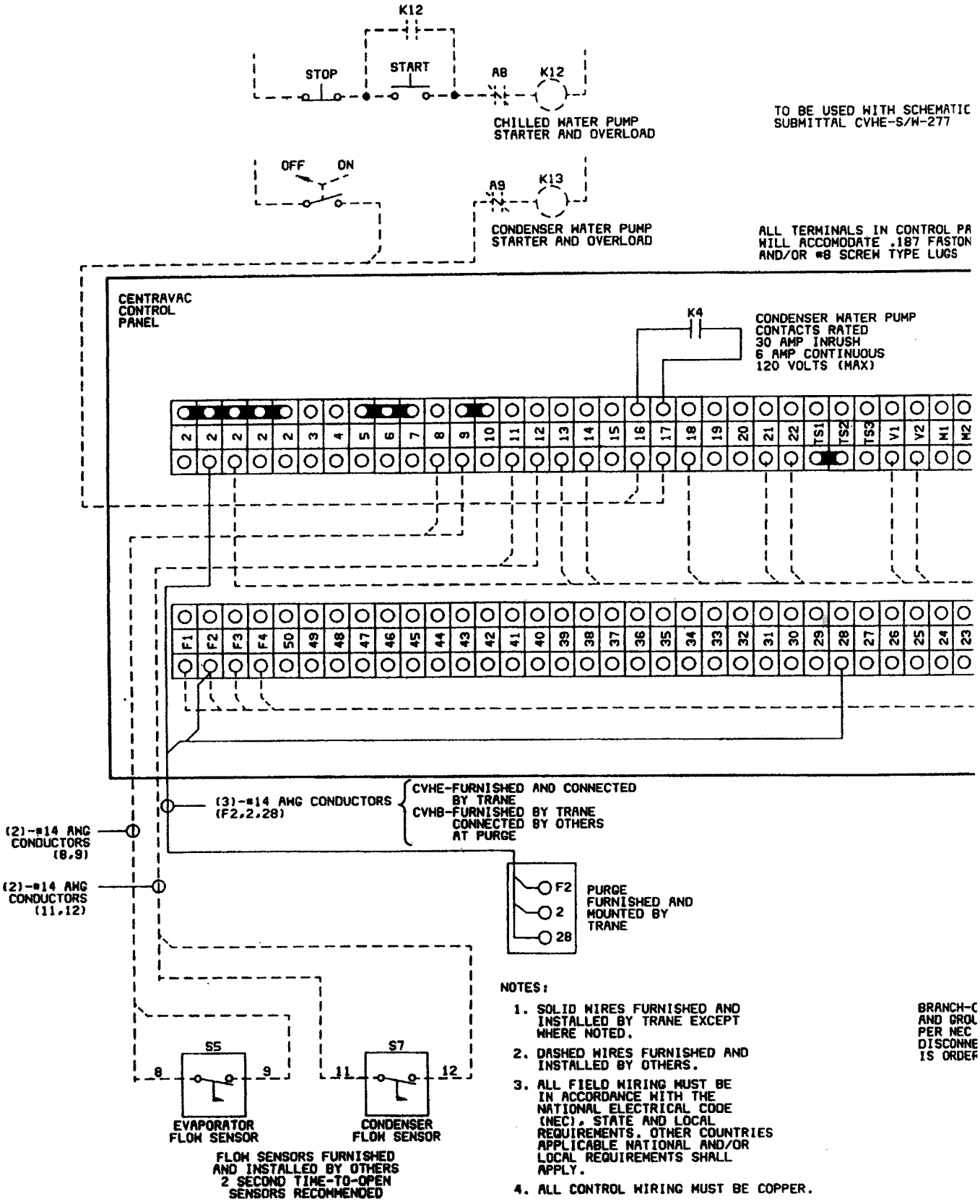

FIGURE 9 - Typical Field Connection Diagram, Pneumatic Capacity Control, Remote Starter

USED WITH SCHEMATIC
TAL CVHE-S/W-277

INALS IN CONTROL PANEL
OMODATE .187 FASTON
8 SCREW TYPE LUGS

R WATER PUMP
RATED
NRUSH
NTINUOUS
S (MAX)

MIN. WIRE SIZE COPPER 75°C	WIRE SELECTION TABLE (REF. NEC 1981) RATED LOAD CURRENT (NAMEPLATE)				
	SUPPLY LEADS OR MOTOR LEADS FOR ACROSS-THE-LINE, AUTO-TRANS STARTER OR PRIMARY REACTOR STARTER			MOTOR LEADS FOR STAR DELTA STARTER	
	1 CONDUIT 3 WIRES	2 CONDUITS 3 WIRES EA	1 CONDUIT 6 WIRES	2 CONDUITS 3 WIRES EA	1 CONDUIT 6 WIRES
8	40	80	64.0	69.2	55.4
6	52	104	83.2	90.0	72.0
4	68	136	108.8	117.6	94.1
3	80	160	128.0	138.4	110.7
2	92	180	147.2	159.2	127.3
1	104	208	166.4	179.9	143.9
0	120	240	192.0	207.6	166.1
00	140	280	224.0	242.2	193.8
000	160	320	256.0	276.8	121.4
0000	184	368	294.4	318.3	254.7
250	204	408	326.4	352.8	282.3
300	228	456	364.8	394.4	315.6
350	248	496	396.8	429.0	343.2
400	268	536	428.8	463.6	370.9
500	304	608	486.4	525.9	420.7
600	336	672	537.6	581.3	465.0

ALL WIRING NOT SHOWN
FURNISHED AND INSTALLED
BY TRANE

WARNING!
OPEN DISCONNECT SWITCH BEFORE SERVICING THE UNIT

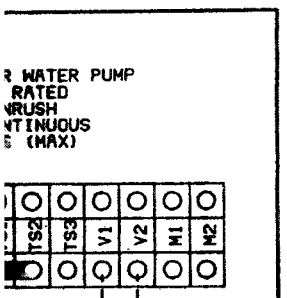

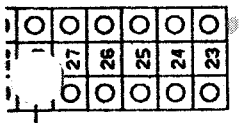

(10)-#14 AWG CONDUCTORS
(F1,F2,F3,F4,2,13,14,18,21,22)
(2)-#18 AWG CONDUCTORS-SHIELDED
(V1,V2)

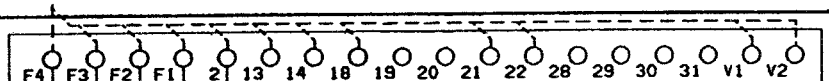

FUSES
(15 AMP PROVIDED)

F4 F3 F2 F1

T1

L1
L2
L3

CONTROL
TRANSFORMER
(3 KVA PROVIDED)

K1
COMPRESSOR STARTER
FOR DETAILS SEE
MANUFACTURERS DRAWINGS

BRANCH-CIRCUIT SHORT-CIRCUIT
AND GROUND-FAULT PROTECTION
PER NEC 440-21 UNLESS FUSED
DISCONNECT OR CIRCUIT BREAKER
IS ORDERED IN STARTER

SUPPLY LEADS
COPPER CONDUCTORS RECOMMENDED
SEE WIRE SELECTION TABLE FOR
RECOMMENDED MIN. WIRE SIZE

A UNIQUE MOTOR CONNECTION PAD
IS SUPPLIED THAT WILL ACCOMODATE
BUS BARS OR STANDARD LUGS
(CRIMP TYPE RECOMMENDED) WITH
3/8" BOLT HOLES. BUS BARS OR
LUGS FURNISHED BY OTHERS.

MOTOR LEADS
COPPER CONDUCTORS
REQUIRED SEE SELECTION
TABLE FOR RECOMMENDED
MIN. WIRE SIZE

B1

COMPRESSOR
MOTOR

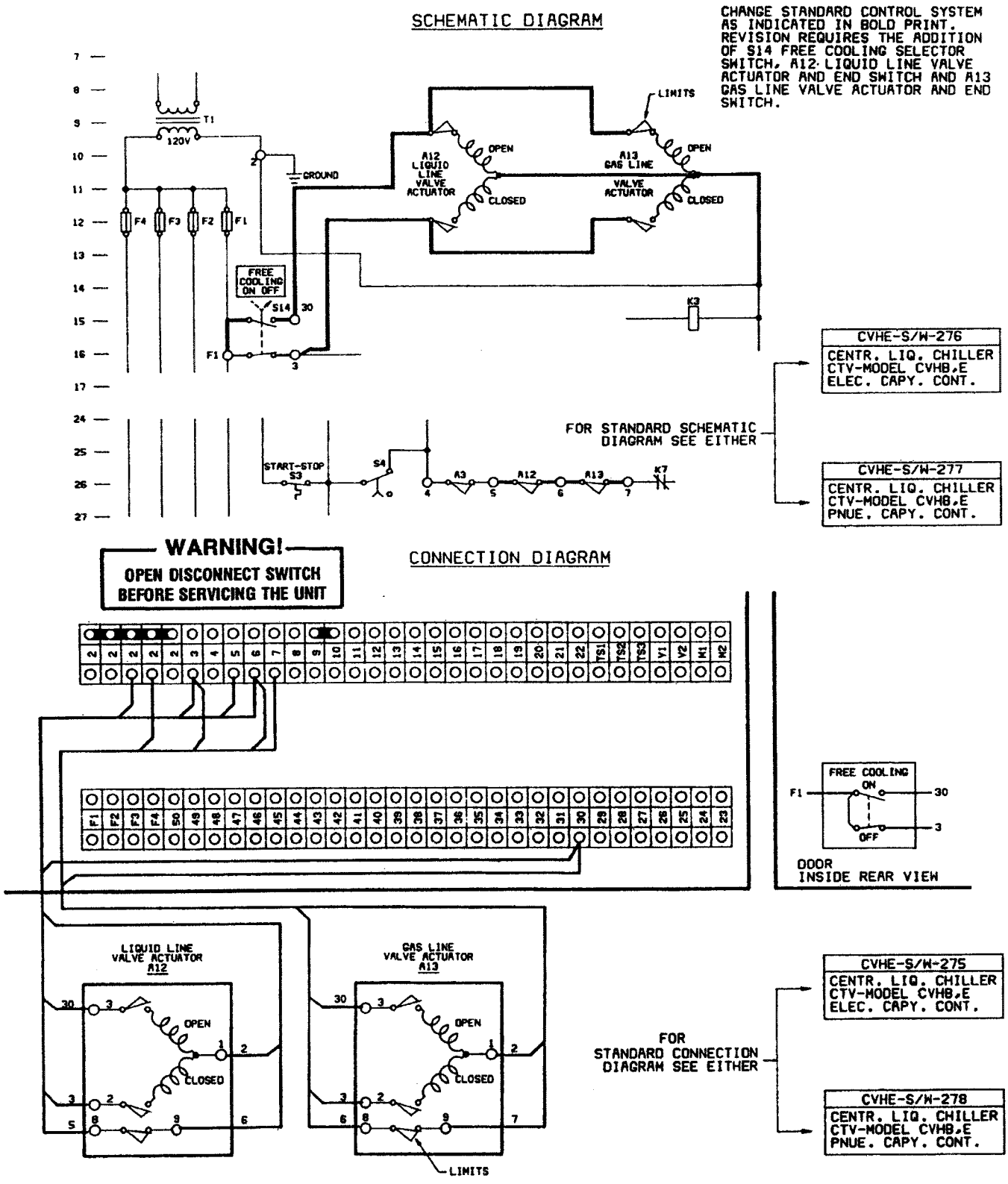

FIGURE 10 - Typical Schematic and Field Connection Diagram For Free Cooling Option

TRANE

Operation Maintenance

CVHE-M-6

Library	**Service Literature**
Product Section	**Refrigeration**
Product	**Centrifugal Liq. Chiller, Water-Cooled**
Model	**60 HZ CVHE, CVHF(Cooling-Only & Heat Recovery)**
Literature Type	**Operation/Maintenance**
Sequence	**6**
Date	**February 1993**
File No.	**SV-RF-CTV-CVHE-M-6-2/93**
Supersedes	

Water-Cooled, Hermetic CenTraVac®

Models CVHE and CVHF

Cooling-Only and Heat-Recovery, Direct-Drive CenTraVacs with UCP695 Control Panels

CVHE 230 thru CVHE-890, 1120, 1250

"1A through 1U" Design Sequences

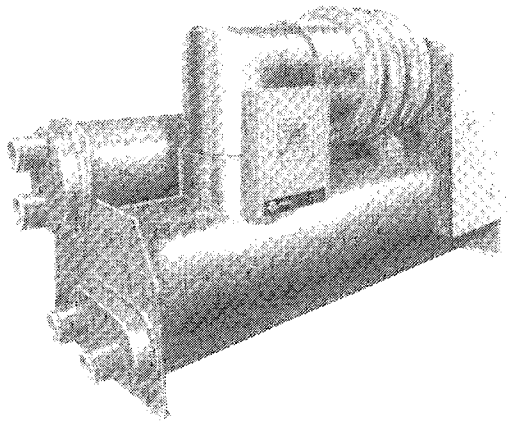

CVHF 650, 770, 910 1060, 1280

"C0" Design Sequence

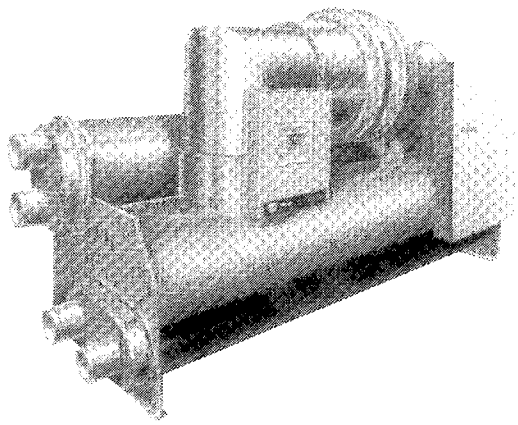

X39470713-01

Since the Trane Company has a policy of continuous product improvement, it reserves the right to change specifications and design without notice. The installation and servicing of the equipment referred to in this booklet should be done by qualified, experienced technicians.

Table of Contents

3 **Product Coding Definition**
3 Introduction
3 Typical Prod. Description Block
3 CVHE Product Coding Explanation

8 **General Information**
8 Literature Change History
8 About this manual
8 Commonly Used Acronyms
8 Warnings and Cautions
9 Unit Nameplate

10 **Mechanical Operation - CVHE**
10 Overview
10 Cooling Only Cycle
13 Compressor Lubrication System - CVHE
13 Motor Cooling System

16 **Mechanical Operation - CVHF**
16 Overview
16 Cooling-Only Cycle
16 Free Cooling, Heat Recovery and Auxiliary Condenser Cycles
19 Compressor Lubrication System - CVHF
19 Motor Cooling System
22 Free Cooling Cycle (Optional) - CVHE/CVHF
23 Heat Recovery Cycle (Optional)
23 Auxiliary Condensers

24 **Chiller Control System**
24 Unit Control Panel
24 Relay Output Module (1U1)
24 Power Supply Output Module (1U2)
25 Micro Module (1U3)
25 Advanced Motor Protection
28 Operator Interface
28 --Chiller Switch
28 --Oil Pump Switch
29 --Purge Switch
29 --Chilled Water Setpoint
29 --Current Limit Setpoint
29 --Vane Control Switch
30 --Free Cooling Switch (Optional)
30 --Unit Status Lights
30 --UCP Display
32 Service Interface
34 --Clear Restart inhibit Push-Button
34 --Control Response Setpoint
34 --Start Differential Setpoint
34 --Condenser Limit Setpoint (Optional)
35 --Evaporator Refrigerant Trip
35 --UCP "Summary Sheet"

36 **Electrical Sequence of Operation**
36 Overview
36 Fuse 1F2 Branch Circuit
36 Chilled and Condenser Water Flow Interlock Circuits
36 Micro Module andWye-Delta-Starter Control circuits
44 Fuse 1F3 Branch Circuit Oil Pump Circuit
44 Vane Actuator Circuit
45 Purge System

46 **Control Options**
46 Free Cooling
46 Hot Gas Bypass
46 --HGBP Relay 1K15
46 --HGBP Transfer Switch 4S4
46 --HGBP Valve Switch 4B5
47 --Discharge Temperature Switch (4S5)
47 Relay Package
48 Bearing Temperature Sensors (4RT8, 4RT9)
48 Sensor Options
57 Serial Communication Interface (SCI)
57 Chilled Water Reset (CWR)
57 --Load-Based CWR
59 --Ambient-Based CWR
60 Remote Generic BAS/CWR Interface

62 **Unit Start-Up Procedures**
62 Daily Unit Start-Up

66 Seasonal Startup

67 **Unit Shutdown Procedures**
67 Daily Unit Shutdown
67 Seasonal Unit Shutdown

68 **Periodic Maintenance**
68 Overview
68 Daily Maintenance and Checks
68 Weekly Maintenance
70 Every 3 Months
70 Every 6 Months
70 Off-Season Maintenance
70 Annual Maintenance
70 Compressor Oil Change on CVHE/CVHF units
70 --Oil Change Procedure
70 --Replacing Oil Filter
70 --Replacement Procedure
72 Other Maintenance Requirements
72 Lubrication
72 Refrigerant Charge
72 Recovery/Recycle Connections
73 Leak Testing
73 Refrigerant Charging

74 **Periodic Maintenance**
74 Cleaning the Condenser
75 Cleaning the Evaporator
75 Control Settings and Adjustments
76 Purge System

77 **Trouble Analysis**
77 UCP695 Control System
77 UCP Summary Sheet

Notice

The Trane Company urges that all HVAC servicers working on Trane equipment, or any manufacturer's products, make every effort to eliminate, if possible, or vigorously reduce the emission of CFC, HCFC, and HFC refrigerants to the atmosphere resulting from installation, operation, routine maintenance, or major service on this equipment. Always act in a responsible manner to conserve refrigerants for continued use even when acceptable alternatives are available.

Conservation and emission-reduction can be accomplished by following recommended Trane service and safety procedures published in Trane general service manuals "CTV-SB-81", "CTV-SB-82" and CFC-Guide 2. Copies of these manuals may be obtained by contacting your local Trane commercial product representative.

 ©American Standard 1993

Product Coding Definition

Introduction

The CVHE 130-1250 and the CVHF 650-1280 is defined using the product definition and selection (PDS) system. This system describes the product offerings in terms of a product coding block which is made up of feature categories and feature codes.

Typical Product Description Block

MODL CVHE	**DSEQ S**
HRTZ 60	**TYPE SNGL**
EVTM IECU	**EVTH 28**
EVWC STD	**EVWP 2**
EVCO FLNG	**EVWA RERE**
CDSZ 080L	**CDBS 800**
CDWT NMAR	**CDPR 150**
CDTY STD	**ORSZ 710**
AGLT NONE	**CNIF MICR**

CVHE/CVHF Product Coding Explanation

The operating components and options for any Model CVHE/ CVHF CenTraVaqc unit can be identified by referring to the alpha-numeric product identification coding block located on the name-plate for the unit. The coding block precisely identifies all characteristics of a unit. Be sure to refer to the service model number when ordering replacement parts or requesting service. An example of a typical product code is given on this page.

Note: Unit-mounted starters are identified by a separate number found on the starter.

NTON 800	**VOLT 4160**
CPKW 650	**CPIM 275**
EVSZ 080L	**EVBS 890**
EVWT NMAR	**EVPR 150**
CDTM IECU	**CDTH 28**
CDWC STD	**CDWP 2**
CDCO FLNG	**CDWA RERE**
PURG HERM	**HGBP W/O**
SRTY RPIR	

MODL
Unit Model

CVHE = CenTraVac Direct Drive Hermetic Development Sequence "E"
CVHF = CenTraVac Direct Drive Hermetic Development Sequence "F"

DSEQ
Design Sequence

S = HCFC123 Gaskets & O Rings

NTON
Unit Nominal Capacity (Tons)

230 = 230 Tons
250 = 250 Tons
280 = 280 Tons
300 = 300 Tons
320 = 320 Tons
360 = 360 Tons
400 = 400 Tons
450 = 450 Tons
500 = 500 Tons
560 = 560 Tons
630 = 630 Tons
650 = 650 Tons
710 = 710 Tons
770 = 770 Tons
800 = 800 Tons
890 = 890 Tons
910 = 910 Tons
1060 = 1060 Tons
1120 = 1120 Tons
1250 = 1250 Tons
1280 = 1250 Tons

VOLT
Unit Voltage

200 = 200/60/3
208 = 208/60/3
230 = 230/60/3
380 = 380/60/50/3
440 = 440/60/3
460 = 460/60/3
480 = 480/60/3
575 = 575/60/3
600 = 600/60/3
2300 = 2300/60/3
2400 = 2400/60/3
3300 = 3300/60/50/3
4000 = 4000/60/3
4160 = 4160/60/3
4800 = 4800/60/3
6600 = 6600/60/3

HRTZ
Unit Hertz

60 = 60 Hertz

TYPE
Unit Type

SNGL = Single Condenser (Cooling Only)
HTRC = Heat Recovery
AUX = Auxiliary Condenser

TYPO
Unit Type

STD = Standard Shells
EXTD = Extended Surface Shells

CPKW
Compressor Motor Kilowatts

96 = 96 KW
106 = 108 KW
131 = 131 KW
142 = 142 KW
154 = 154 KW
171 = 171 KW
187 = 187 KW
204 = 204 KW
231 = 231 KW
257 = 257 KW
287 = 287 KW
323 = 323 KW
361 = 361 KW
403 = 403 KW
453 = 453 KW
512 = 512 KW
588 = 588 KW
653 = 653 KW
361 = 361 KW
745 = 745 KW
856 = 856 KW
957 = 957 KW
1062 = 1062 KW
1228 = 1228 KW

CPIM
Compressor Impeller-Diameter

	3-STAGE			2-STAGE	
220	22.0	22.0	22.0		
222	22.5	22.0	22.0		
223	22.5	22.5	22.0		
225	22.5	22.5	22.5		
227	23.0	22.5	22.5		
228	23.0	23.0	22.5		
230	23.0	23.0	23.0		
232	23.5	23.0	23.0		
233	23.5	23.5	23.0		
235	23.5	23.5	23.5		
237	24.0	23.5	23.5		
238	24.0	24.0	23.5		
240	24.0	24.0	24.0		
242	24.5	24.0	24.0		
243	24.5	24.5	24.0		
245	24.5	24.5	24.5		
247	25.0	24.5	24.5		
248	25.0	25.0	24.5		
250	25.0	25.0	25.0		
252	25.5	25.0	25.0		
253	25.5	25.5	25.0		
255	25.5	25.5	25.5		
257	26.0	25.5	25.5		
258	26.0	26.0	25.5		
260	26.0	26.0	26.0		
262	26.5	26.0	26.0		
263	26.5	26.5	26.0		
265	26.5	26.5	26.5		
267	27.0	26.5	26.5		
268	27.0	27.0	26.5		
270	27.0	27.0	27.0	27.00	27.00
271				27.25	2700
272	27.5	27.0	27.0		
273	27.5	27.5	27.0	27.25	27.25
274				27.50	27.50
275	27.5	27.5	27.5	27.50	27.50
276				27.75	27.75
277	28.0	27.5	27.5		
278	28.0	28.0	27.5	27.75	27.75
279				28.00	27.75
280	28.0	28.0	28.0	28.00	28.00
281				28.50	28.00
282	28.5	28.0	28.0		
283	28.5	28.5			
284				28.50	28.50
285	28.5	28.5	28.5	28.55	28.50
286				28.75	28.50
287	29.0	29.0	28.5	28.75	28.75
288	29.0	29.0	28.5	28.75	28.75
289				29.00	28.75
290	29.0	29.0	29.0	29.00	29.00
291				29.25	29.00
292	29.5	29.0	29.0		
294				29.50	29.50
295	29.5	29.5	29.5	29.50	29.50
296	31.0	30.5	30.5		
297	30.0	29.5	29.5		
298	30.0	30.0	29.5	29.75	29.75
299				30.00	29.75
300	30.0	30.0	30.0	30.00	30.00
301				30.25	30.00
302	30.5	30.0	30.0		
303	30.5	30.5	30.0	30.25	30.25
304				30.50	30.25
305	30.5	30.5	30.5	30.50	30.50
307	31.0	30.5	30.5		
308	31.0	31.0	30.5	30.75	30.75
309				31.00	30.75
310	31.0	31.0	31.0	31.00	31.00
311				31.25	31.00
312	31.5	31.0	31.0		
313	31.5	31.5	31.0	31.25	31.25
314				31.50	31.25
315	31.5	31.5	31.5	31.50	31.50
316				31.75	31.50
317	31.0	31.5	31.5		
318	32.0	32.0	31.5		
319				32.00	31.75
320	32.0	32.0	32.0	32.00	32.00
321				32.25	32.00
322	32.5	32.0	32.0		
323	32.5	32.5	32.0	32.25	32.25
324				32.50	32.50
325	32.5	32.5	32.5	32.50	32.50
326				32.75	32.50
327	33.0	32.5	32.5		
328	33.0	33.0	32.5	32.75	32.75
329				33.00	32.50
330	33.0	33.0	33.0	33.00	33.00

EVTM
Evaporator Tube Material
IECU = Internally Enhanced CU -1"
SBCU = Smooth Bore CU
SB91 = Smooth Bore CU/NI 90/10
TECU = Internally Enhanced CU - 3/4"

EVTH
Evaporator Tube Wall Thickness
28 = .028 Wall Thickness
35 = .035 Wall Thickness

EVSZ
Evaporator Shell Size
032S = 300 Ton Short Shell
032L = 300 Ton Long Shell
050S = 500 Ton Short Shell
050L = 500 Ton Long Shell
80S = 800 Ton Long Shell
080L = 800 Ton Long Shell
125L = 1250 Ton Long Shell
140E = 1400 Extended Length Shell
142M = 1400 Ton Medium Shell
142M = 1400 Ton Medium Shell
142L = 1400 Ton Long Shell
210M = 2100 Ton Medium Shell
210L = 2100 Ton Long Shell

EVBS
Evaporator Tube Bundle Size
200 = 200 Nominal Tons
220 = 220 Nominal Tons
230 = 230 Nominal Tons
250 = 250 Nominal Tons
280 = 280 Nominal Tons
320 = 320 Nominal Tons
350 = 350 Nominal Tons
360 = 360 Nominal Tons
400 = 400 Nominal Tons
450 = 450 Nominal Tons
500 = 500 Nominal Tons
550 = 550 Nominal Tons
560 = 560 Nominal Tons
630 = 630 Nominal Tons
710 = 710 Nominal Tons
800 = 800 Nominal Tons
900 = 900 Nominal Tons
985 = 985 Nominal Tons
1000 = 1000 Nominal Tons
1080 = 1080 Nominal Tons
1120 = 1120 Nominal Tons
1225 = 1225 Nominal Tons
1250 = 1250 Nominal Tons
1400 = 1400 Nominal Tons
1425 = 1425 Nominal Tons
1450 = 1450 Nominal Tons
1610 = 1610 Nominal Tons
1765 = 1765 Nominal Tons
1900 = 1900 Nominal Tons
2100 = 2100 Nominal Tons

EVWC
Evaporator Waterbox Construction
STD = Standard Welded
ASME = ASME Welded - Water-Side

EVWP
Evaporator Water Passes
1 = One Pass
2 = Two Pass
3 = Three Pass

EVWT
Evaporator Waterbox Type
MAR = Marine
NMAR = Non-Marine

EVPR
Evaporator Waterside Pressure
150 = 150 PSIG
300 = 300 PSIG

EVCO
Evaporator Waterbox Connection
VICT = Victaulic
FLNG = Flanged

EVWA
Evaporator Waterbox Arrangement
FRNT = In Front/Out Front
REAR = In Rear/Out Rear
LFRR = In LH Front/Out RH Rear
RRLF = In RH Rear/Out LH Front
LRRF = In Rear/Out RH Front
RFLR = In Front/Out LH Rear
LFLR = In LH Front/Out LH Rear
LRLF = In LH Rear/Out LH Front
RFRR = In RH Front/Out RH Rear
RRRF = In RH Rear/Out RH Front
END = In One End/Out the Other
RERE = In RH End/Out RH End
LELE = In LH End/Out LH End

CDTM
Condenser Tube Material
IECU = Internally Enhanced CU-1"
SBCU = Smooth Bore CU
SB91 = Smooth Bore CU/NI 90/10
SB73 = Smooth Bore CU/NI 70/30
SBT1 = Smooth Bore Titanium
TECU = Internally Enhanced CU-3/4"

CDTH
Condenser Tube Thickness
28 = .028 Wall Thickness
35 = .035 Wall Thickness
42 = .042 Wall Thickness
49 = .049 Wall Thickness

CDSZ
Condenser Shell Size
032S = 320 Ton Short Shell
032L = 320 Ton Long Shell
050S = 500 Ton Short Shell
050L = 500 Ton Long Shell
080S = 800 Ton Short Shell
080L = 800 Ton Long Shell
125L = 1250 Ton Long Shell
140L = 1400 Ton Long Shell
142S = 1400 Ton Short Shell
142L = 1400 Ton Long Shell
210S = 2100 Ton Short Shell
210L = 2100 Ton Long Shell

CDBS
Condenser Tube Bundle Size
200 = 200 Nominal Tons
220 = 220 Nominal Tons
230 = 230 Nominal Tons
250 = 250 Nominal Tons
280 = 280 Nominal Tons
320 = 320 Nominal Tons
350 = 350 Nominal Tons
360 = 360 Nominal Tons
400 = 400 Nominal Tons
450 = 450 Nominal Tons
500 = 500 Nominal Tons
550 = 550 Nominal Tons
560 = 560 Nominal Tons
630 = 630 Nominal Tons
710 = 710 Nominal Tons
800 = 800 Nominal Tons
890 = 890 Nominal Tons
900 = 900 Nominal Tons
985 = 985 Nominal Tons
1000 = 1000 Nominal Tons
1080 = 1080 Nominal Tons
1120 = 1120 Nominal Tons
1225 = 1225 Nominal Tons
1250 = 1250 Nominal Tons
1400 = 1400 Nominal Tons
1425 = 1425 Nominal Tons
1610 = 1610 Nominal Tons
1765 = 1765 Nominal Tons
1900 = 1900 Nominal Tons
2100 = 2100 Nominal Tons

CDWC
Condenser Water Box Construction
STD = Standard Welded
ASME = ASME Welded - Water-Side

CDWP
Condenser Water Passes
2 = 2 Pass
3 = 3 Pass

CDWT
Condenser Waterbox Type
MAR = Marine
NMAR = Non-Marine

CDPR
Condenser Water Side Pressure
150 = 150 PSIG
300 = 300 PSIG

CDCO
Condenser Waterbox Connection
VICT = Victaulic
FLNG = Flanged

CDWA
Condenser Waterbox Arrangement
LFLF = In LH Front/Out LF Front
LRLR = In LH Rear/Out LH Rear
RFRF = In RH Front/Out RH Front
RRRR = In RH Rear/Out RH Rear
LFLR = In LH Front/Out LH Rear
LRLF = In LH Rear/Out LH Front
RFRR = In RH Front/Out RH Rear
RRRF = In RH Rear/Out RH Front
RERE = In RH End/Out RH End
LELE = In LH End/Out LH End

CDTY
Condenser Construction - Refrigerant Side
STD = Standard Welded
ASME = ASME Welded

TSTY
Tube Sheet Construction
STD = Standard Welded
ASME = ASME Welded

CHTM
Heat Rec. Condenser Tube Material
IECU = Internal Enhance CU -1"
SBCU = Smooth Bore CU
SB91 = Smooth Bore CU/NI 90/10
SB73 = Smooth Bore CU/NI 70/30
SBT1 = Smooth Bore Titanium
TECU = Internally Enhanced CU-3/4"

CHTH
Heat Rec. Condenser Tube Wall Thickness
28 = .028 Wall Thickness
35 = .035 Wall Thickness
42 = .042 WallThickness
49 = .049 WallThickness

CHSZ
Heat Rec. Condenser Shell Size
032S = 320 Ton Short Shell
032L = 320 Ton Long Shell
050S = 500 Ton Short Shell
050L = 500 Ton Long Shell
080S = 800 Ton Short Shell
080L = 800 Ton Long Shell
125L = 1250 Ton Long Shell
140L = 1400 Ton Long Shell

CHBS
Heat Rec. Condenser Tube Bundle Size
200 = 200 Nominal Tons
230 = 230 Nominal Tons
250 = 250 Nominal Tons
280 = 280 Nominal Tons
320 = 320 Nominal Tons
360 = 360 Nominal Tons
400 = 400 Nominal Tons
450 = 450 Nominal Tons
500 = 500 Nominal Tons
560 = 560 Nominal Tons
630 = 630 Nominal Tons
710 = 710 Nominal Tons
800 = 800 Nominal Tons
900 = 900 Nominal Tons
1000 = 1000 Nominal Tons
1120 = 1120 Nominal Tons
1250 = 1250 Nominal Tons

1400 = 1400 Nominal Tons

CHWC
Heat Rec. Condenser Waterbox Construction
STD = Standard Welded
ASME = ASME Welded - Water Side

CHWP
Heat Rec. Condenser Water Passes
2 = 2 Pass
3 = 3 Pass

CHWT
Heat Rec. Condenser Waterbox Type
MAR = Marine
NMAR = Non-Marine

CHPR
Heat Rec. Condenser Waterbox Side Pressure
150 = 150 PSIG
300 = 300 PSIG

CHCO
Heat Rec. Condenser Waterbox Connections
VICT = Victaulic
FLNG = Flanged

CHWA
Heat Rec. Condenser Waterbox Arrangement
LFLF = In LH Front/Out LF Front
LRLR = In LH Rear/Out LH Rear
RFRF = In RH Front/Out RH Front
RRRR = In RH Rear/Out RH Front
LFLR = In LH Front/Out LH Rear
LRLF = In LH Rear/Out LH Front
RFRR = In RH Front/Out RH Rear
RRRF = In RH Rear/Out RH Front
RERE = In RH End/Out RH End
LELE = In LH End/Out LH End

CABS
Auxiliary Condenser Nominal Tonnage
80 = 80 Nominal Tons
130 = 130 Nominal Tons

CAWC
Auxiliary Condenser Waterbox Construction
STD = Standard Welded
ASME = ASME Welded - Water Side

CATM
Auxiliary Condenser Tube Material
IECU = Internal Enhance CU -1"
SBCU = Smooth Bore CU
SB91 = Smooth Bore CU/NI 90/10
SB73 = Smooth Bore CU/NI 70/30
SBT1 = Smooth Bore Titanium
TECU = Internally Enhanced CU -3/4"

CATH
Auxiliary Condenser Tube Wall Thickness
28 = .028 Wall Thickness
35 = .035 Wall Thickness
42 = .042 Wall Thickness

CACO
Auxiliary Condenser Waterbox Connection
VICT = Victaulic
FLNG = Flanged

CAPR
Auxiliary Condenser Water Side Pressure
150 = 150 PSIG
300 = 300 PSIG

CAWT
Auxiliary Condenser Waterbox Type
MAR = Marine
NMAR = Non-Marine

CAWA
Auxiliary Condenser Waterbox Arrangement
LFLF = In LH Front/Out LF Front
LRLR = In LH Rear/Out LH Rear
RFRF = In RH Front/Out RH Front
RRRR = In RH Rear/Out RH Rear
LFLR = In LH Front/Out LH Rear
LRLF = In LH Rear/Out LH Front
RFRR = In RH Front/Out RH Rear
RRRF = In RH Rear/Out RH Front
RERE = In RH End/Out RH End
LELE = In LH End/Out LH End

ECTY
Economiser Orifice Type
WEOR = Welded
REOR = Bolted Removable

ORSZ
Orifice Size
130 = Orifice Size
140 = Orifice Size
160 = Orifice Size
180 = Orifice Size
200 = Orifice Size
230 = Orifice Size
250 = Orifice Size
280 = Orifice Size
320 = Orifice Size
360 = Orifice Size
375 = Orifice Size
400 = Orifice Size
415 = Orifice Size
450 = Orifice Size
460 = Orifice Size
500 = Orifice Size
510 = Orifice Size
560 = Orifice Size
585 = Orifice Size
630 = Orifice Size
650 = Orifice Size
710 = Orifice Size
790 = Orifice Size
800 = Orifice Size
880 = Orifice Size
900 = Orifice Size
990 = Orifice Size
1000 = Orifice Size
1100 = Orifice Size
1120 = Orifice Size
1250 = Orifice Size
1265 = Orifice Size
1400 = Orifice Size
1540 = Orifice Size
1600 = Orifice Size
1660 = Orifice Size
1800 = Orifice Size
1810 = Orifice Size
1970 = Orifice Size
2150 = Orifice Size

PURGE
Purge Unit
PURE = Purifier Unit

SPKG
Shipping Package
DOM = Domestic
EXP = Export
FULL = Export

OPTI
Unit Options
CLCT = Condenser Limit Control
BRTS = Bearing Temperature Sensor
EVWS = Evaporator Water Sensor
TRMP = Tracer Monitoring Package
ALRP = Relay Package
CDWS = Condenser Water Sensor
CRTS = Condenser Refrigerant Temp Sensor
ELLG = Evap Liquid Level Gage
NZEP = Near Zero Emission Purge
ISLS = Spring Isolator
INSL = Insulation Package
CPDW = Compressor Doweling
TMEW = Thermometer 10 Inch Ext Well
TMSW = Thermometer 10 Inch Std Well
T5RT = TR5 Timer
FRCL = Free Cooling

HGBP
Hot GasBy-Pass
With = With
W/O = Without

AGLT
Agency Listing
NONE = No Agency Listings
UL = Underwriter Laboratory
CSA = Canadian Standard Assoc.

CNIF
Control Interface
MICR = Standard Micro Processor
CWR = Chilled Water Reset
SCI = Serial Communications Interface
GBAS = Generic BAS Interface for Chilled Water Reset

SRTY
Starter Type
USTR = Unit Mounted Star-Delta
RSTR = Remote Mounted Star-Delta
RXL = Remote Mounted X-Line
RATR = Remote Mounted Auto Transformer
RPIR = Remote Mounted Primary Reactor
CSTR = Customer Supplied Star-Delta
CXL = Customer Supplied X-Line - Full V
CATR = Customer Supplied Autotransformer
CPIR = Customer Supplied Primary Reactor

SRRL
Starter (Nameplate) RLA

PNCO
Starter Panel Connection
TERM = Terminal Block
DISC = Disconnect Switch (Noan-Fused)
CB = Circuit Breaker
CBIC = Circuit Breaker - High Interupting Capcity
CBCL = Circuit Breaker - Current Limiting
ISSW = Isolation Switch
ISLB = Load Break Switch

SRPO
Electrical Protection
SPLA = Surge Protection Plus Lighting Arrestors
UVR = Undervolt Relay with Rest
AUVR = Adjustable Undervoltage Relay Reset Overvoltage Relay
OVR = Overvoltage Relay
GRDF = Ground Fault

SRPO
Starter Options
CLCA = California Code
CSA = Canadian Standards Assoc.
CTRV = Control Meter (Volt)
CTRA = Control Meter (AMP)
IQD = I.Q. Data
IQDP = I.Q. Data Plus
NEMA = NEMA 12
SRIT = Starter Interlocks
PLIT = Pilot Lights
TDRC = Transducer Current
TDRV = Transducer Volt
TDRW = Transducer Watt
UL = Underwriters Laborator
WTTM = Wattmeter
WHM = Watt Hour Meter
WHMD = Watt Hour Meter with Demand Register
WHMP = Watt Hour Meter with Pulse Initiator
WHMB = Watt Hour Meter with both Demand Register & Pulse Initiator

SRFC
Starter Power-Factor Correction Capacitors
10 = 10 KVAR
15 = 15 KVAR
20 = 20 KVAR
25 = 25 KVAR
30 = 30 KVAR
35 = 35 KVAR
40 = 40 KVAR
45 = 45 KVAR
50 = 50 KVAR
60 = 60 KVAR
70 = 70 KVAR
75 = 75 KVAR
80 = 80 KVAR
90 = 90 KVAR
100 = 100 KVAR
120 = 120 KVAR
125 = 125 KVAR
150 = 150 KVAR
200 = 200 KVAR

ACCY
Unit Accessory
ISLS = Isolator Spring
FS1 = (1) Flow Switch 150 PSI NEMA 1
2FS1 = (2) Flow Switchs 150 PSI NEMA 1
3FS1 = (3) Flow Switches 150 PSI NEMA 1
FS2 = (1) Flow Switch 300 PSI NEMA 1
2FS2 = (2) Flow Switches 300 PSI NEMA 1
3FS2 = (3) Flow Switches 300 PSI NEMA 1
FS3 = (1) Flow Switch 150 PSI Vaporproof
2FS3 = (2) Flow Switches 150 PSI Vaporproof
3FS3 = (3) Flow Switches 150 PSI Vaporproof
FS4 = (1) Flow Switch 300 PSI Vaporproof
2FS4 = (2) Flow Switches 300 PSI Vaporproof
3FS4 (3) Flow Switches 300 PSI Vaporproof
TME = (1) Thermometer 10 In Extended Well
2TME = (2) Thermometers 10 In Extended Well
3TME = (3) Thermometers 10 In
TMS = (1) Thermometer 10 In Standard Well
2TMS = (2) Thermometers 10 In Standard Well
3TMS = (3) Thermometers 10 In Standard Well
T5R = (1) T5R Timer
2T5R = (2) T5R Timers
3T5R = (3) T5R Timers
OR01 - OR28 = Extra Set of Orifice Plates (OR01 thru OR28)
OR30 - OR47 = Extra Set of Orifice Plates (OR30 thru OR47)

General Information

Literature Change History CVHE-M-6 (February 1993)

Original issue of manual; describes proper operation and maintenance of 60 Hz. CVHE units of "1A " through "1U " design sequences with UCP695 micro-computer-based control systems and CVHF 650 and 1280 "C0 " design sequences with UCP695 micro-computer-based control systems.

About this Manual

This booklet describes the operation and maintenance of 60 Hz. Model CVHE and CVHF CenTraVac chillers equipped with micro-computer-based control systems, whether standard (cooling) or heating-recovery. By carefully reviewing this information and following the instructions given, the owner/operator can successfully operate and maintain a CVHE or CVHF unit.

Diagnostic information is provided at the end of this manual to allow the operator to identify a number of system malfunctions, should any develop. (If mechanical problems do occur, however, contact a qualified service organization to ensure proper diagnosis and repair of the unit.)

Commonly Used Acronyms

For convenience, a number of acronyms are used throughout this manual. These acronyms are listed alphabetically below, along with the "translation" of each:

AMB = Outdoor Ambient Temperature
ASME = American Society of Mechanical Engineers
BAS = Building Automation System

CWR = Chilled Water Reset
DTFL = Design Delta-T at Full Load (i.e., the difference between entering and leaving chilled water temperatures)

ENT = Entering Chilled Water Temperature
FC = Free Cooling
HGBP = Hot Gas Bypass

HVAC = Heating, Ventilating, and Air Conditioning
IE = Internally-Enhanced Tubes
LVG = Leaving Chilled Water Temperature

PCWS = Front Panel Chilled Water Setpoint
PSID = Pounds-per-Square-Inch (differential pressure)
PSIG = Pounds-per-Square-Inch (gauge pressure)

SCI = Serial Communication Interface
SCP = Model CVMA System Control Panel (i.e., used to control up to 3 CenTraVacs with UCPs)
UCP = Microcomputer-based, UCP695 Chiller Control Panel for CenTraVacs

Warnings and Cautions

Notice that warnings and cautions appear at appropriate intervals throughout this manual. Warnings are provided to alert installing contractors to potential hazards that could result in personal injury or death, while cautions are designed to alert personnel to conditions that could result in equipment damage.

Your personal safety and the proper installation of this machine depend upon the strict observance of these precautions.

Unit Nameplate

The CVHE or CVHF unit nameplate is located on the left side of the unit control panel (UCP). A typical unit nameplate is illustrated in Figure 1. The following information is provided on the unit nameplate.

- Service model and size descriptor.
- Unit serial number
- Identifies unit electrical requirements
- List correct operating charges of CFC-11 or HCFC-123
- Lists unit test pressures and maximum operating pressures.
- Identifies unit Installation and Operation and Maintenance manual
- Product description block (identifies all unit components and unit "design sequence" (used to order literature and make other inquiries about the unit).
- Lists drawing numbers for unit wiring diagrams.

Figure 1
Typical Unit Nameplate

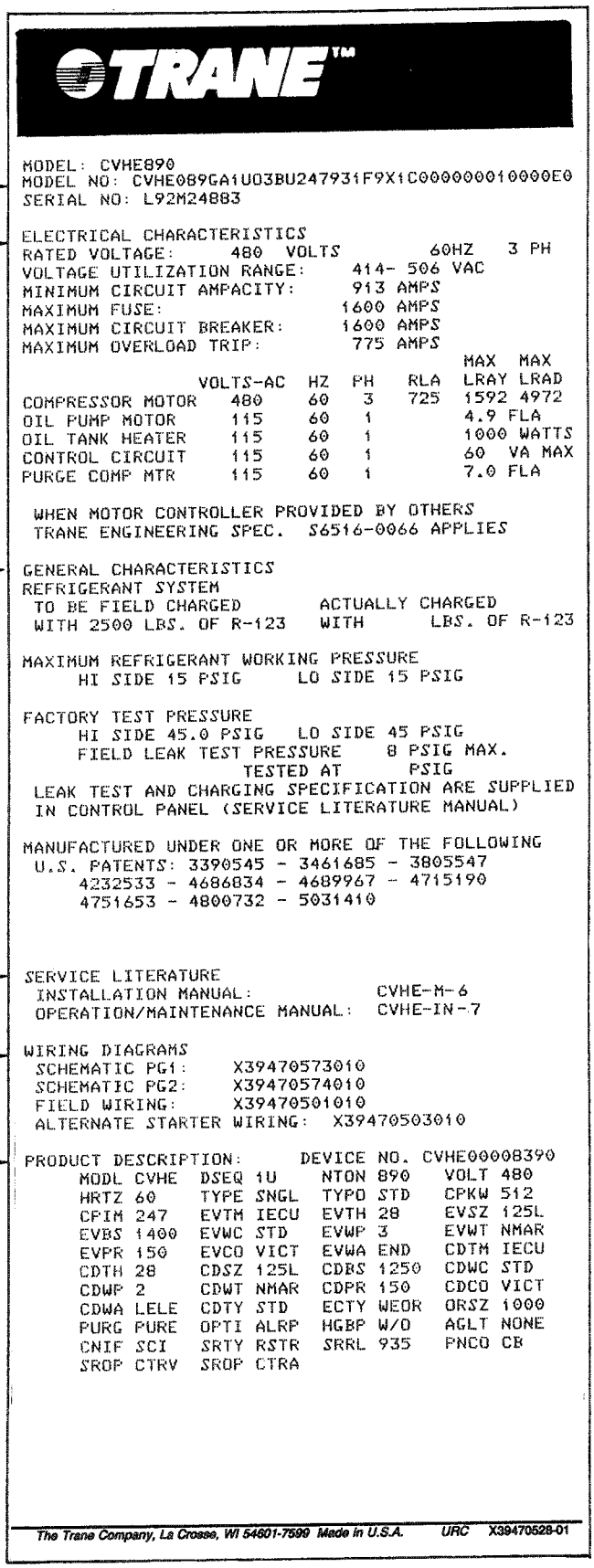

Unit Model and Size Descriptor

Unit and Motor Electrical Data

Unit Refrigerant Charge Information

Unit Service Literature

Wiring Diagram Number

Product Description Block

Mechanical Operation - CVHE

Overview

Each CVHE unit is comprised of 5 basic components: (1) the evaporator, (2) 3-stage compressor for the CVHE unit (3) water-cooled condenser, (4) 2-stage economizer, and (5) related interconnecting piping. A heat-recovery or auxiliary condenser can be factory-added to the basic unit assembly to provide a heat-recovery cycle.

Figure 2 illustrates a typical CVHE chiller.

Following are discussions of the unit's cooling-only and heat-recovery modes of operation. A pressure/enthalpy diagram (shown in Figure 3) is provided to further illustrate unit operation.

Cooling-Only Cycle.

When the CVHE is functioning in the cooling mode, liquid refrigerant is distributed along the length of the evaporator and sprayed through small holes in a distributor (i.e., running the entire length of the shell) to uniformly coat each evaporator tube. Here, the liquid refrigerant absorbs enough heat from the system water circulating through the evaporator tubes to vaporize.

The gaseous refrigerant is then drawn through the eliminators (which remove droplets of liquid refrigerant from the gas) and first-stage variable inlet guide vanes, and into the first stage impeller.

Note: Inlet guide vanes are designed to modulate the flow of gaseous refrigerant to meet system capacity requirements; they also prerotate the gas, allowing it to enter the impeller at an optimal angle that maximizes efficiency at all load conditions.

Compressed gas from the first-stage impeller flows through the fixed, second-stage inlet vanes and into the second-stage impeller. Here, the refrigerant gas is again compressed, and then discharged through the third-stage variable guide vanes and into the third-stage impeller.

Once the gas is compressed a third time, it is discharged into the condenser. Baffles within the condenser shell distribute the compressed refrigerant gas evenly across the condenser tube bundle. Cooling tower water circulated through the condenser tubes absorbs heat from the refrigerant, causing it to condense. The liquid refrigerant then passes through orifice plate "A" and into the economizer.

The economizer reduces the energy requirements of the refrigeration cycle by eliminating the need to pass all gaseous refrigerant through 3 stages of compression. See Figure 4. Notice that some of the liquid refrigerant flashes to a gas because of the pressure drop created by the orifice plates, thus further cooling the liquid refrigerant. This flash gas is then drawn directly from the first (Chamber A) and second (Chamber B) stages of the economizer into the third- and second-stage impellers of the compressor, respectively.

Any remaining liquid refrigerant flows through another orifice plate "C" to the evaporator.

Figure 2
Typical CVHE Unit Assemblies

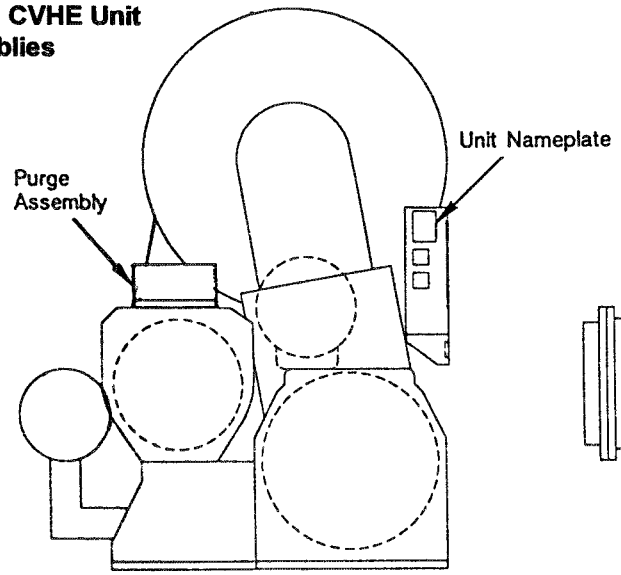

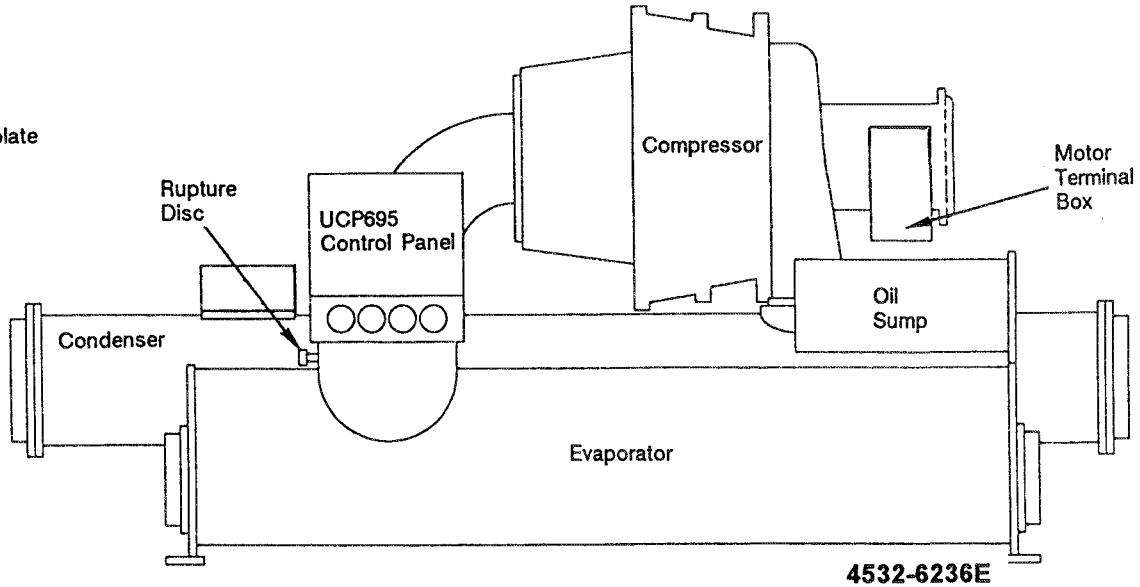

4532-6236E
4533-8504

CVHE Unit w/Auxiliary or Heat-Recovery Condenser

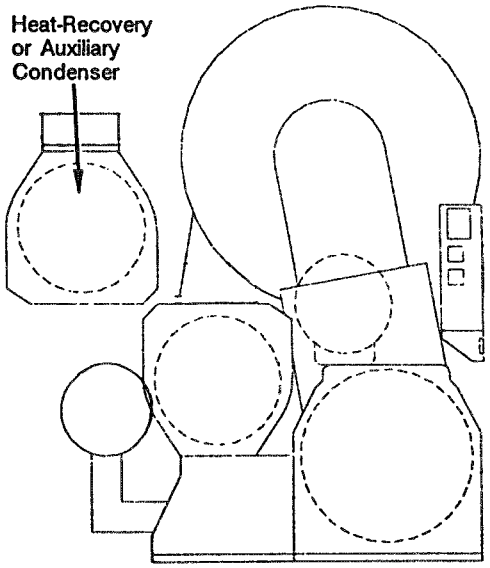

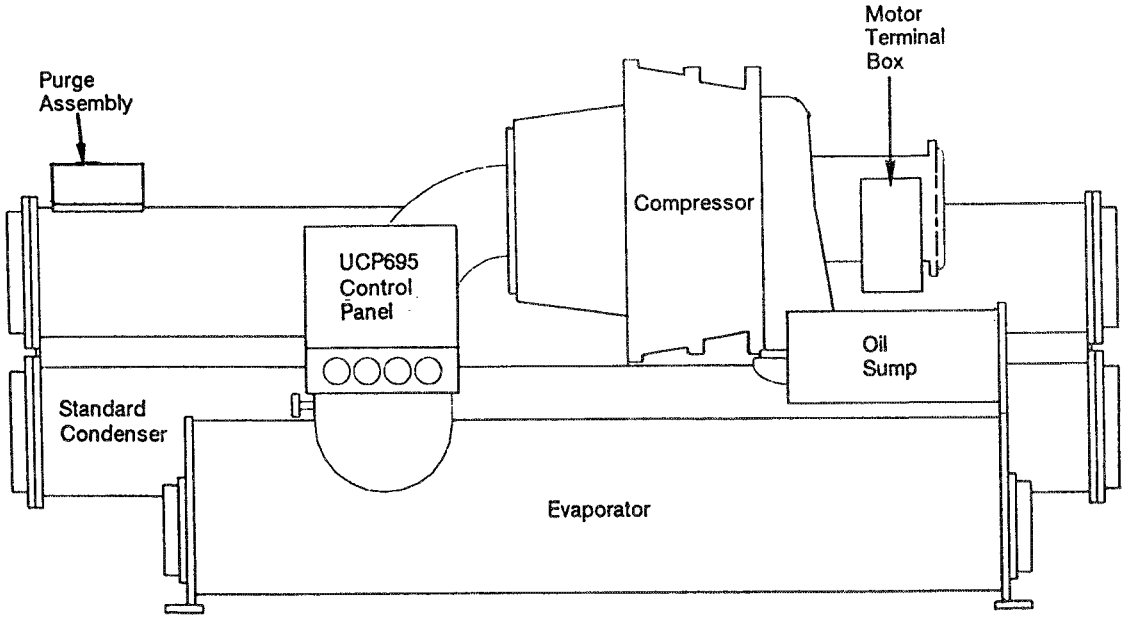

4532-6238E
4533-8504

Figure 3
Pressure/Enthalpy Curve

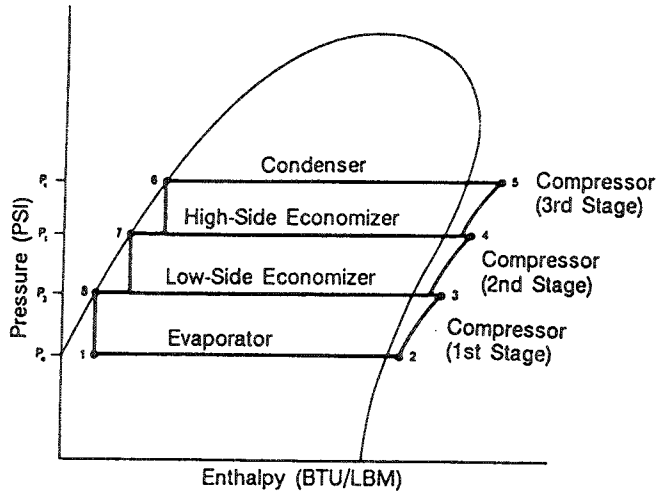

Figure 4
2-Stage Economizer

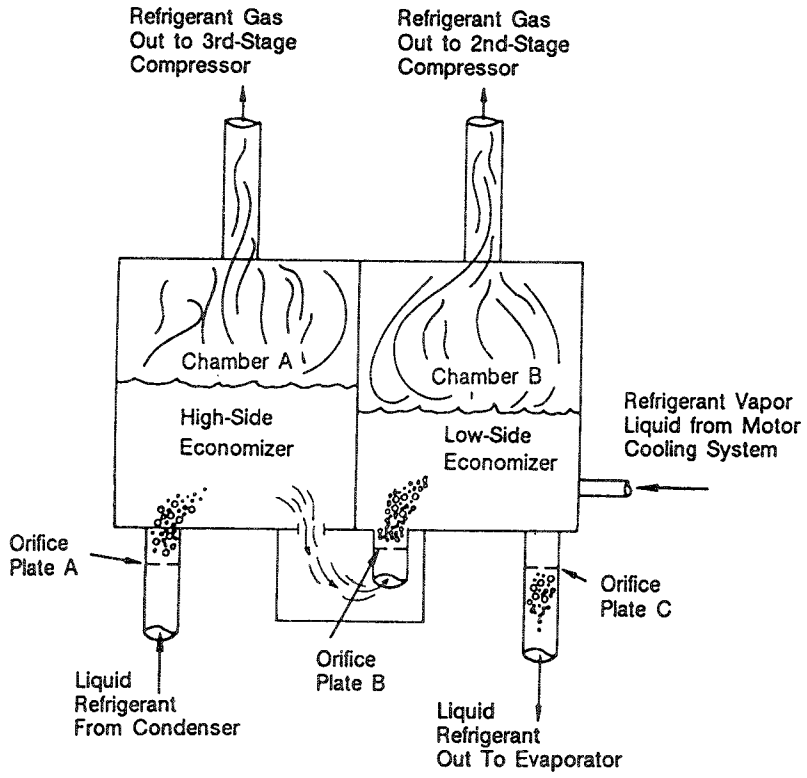

Compressor Lubrication System - CVHE

A schematic diagram of the compressor lubrication system is illustrated in Figure 5; this system supplies oil to the compressor motor bearings.

Oil is pumped from the oil tank (i.e. by a pump and motor located within the tank) through an oil pressure-regulating valve designed to maintain a net oil pressure of 12 to 18 psid. It is then filtered and sent to the compressor motor bearings. On later design CVHE and CVHF models, the oil filter assembly is equipped with refrigeration valves to isolate the filter during filter replacement.

From the bearings, the oil drains back to the oil tank through return lines.

WARNING:
Use caution while working on certain areas of the unit. Surface temperatures may exceed 150°F on the compressor discharge, oil tank (heater), oil filter, and oil lubrication lines.

To ensure proper lubrication and prevent refrigerant from condensing in the oil tank, a 1000-watt heater is secured to the oil tank exterior. Operating in response to a signal from the UCP, this heater energizes as needed to maintain 140° to 145 °F (60-63 C) when the chiller is not running. When the chiller is operating, the temperature of the oil tank is typically 115° to 160° F (46-72 C).

Refer to Figure 5; notice that the oil tank is vented between the compressor inlet vanes and the first-stage impeller suction cover. During normal system operation, motor barrel pressure is greater than that of the oil tank. Therefore, any gaseous refrigerant that enters the motor bearing cavities is drawn toward the oil tank where it is removed by the vent line.

A dual eductor system is used to reclaim oil from the suction cover and from the evaporator, and deposits it back into the oil tank. These eductors use high pressure condenser gas to draw the oil from the suction cover and evaporator back to the eductors, from the eductors the oil is discharged to the top of the oil tank.

Note: CVHEs utilize a time delay relay and solenoid valve that temporarily close the oil sump vent line during the chiller start sequence. This prevents the loss of oil pressure that can occur during start-up by isolating the oil sump from the low-pressure cavity at the opposite end of the sump vent line.

Liquid refrigerant is used to cool the oil supply to the inboard motor bearing on larger units (500-1250). Oil entering the oil cooler assembly from the oil tank (via the regulating valve and filter) flows into a coil inside the cooler shell. See Figure 6. As the oil passes through this coil, it is cooled by a mixture of gaseous and liquid refrigerant that surround the coil exterior.

Once the cooled oil leaves the cooler shell, it flows directly to the inboard motor bearing, and eventually returns to the oil tank.

The oil cooler is piped into the return circuit of the motor cooling system. Part of the refrigerant that is used to cool the compressor motor passes through the oil cooler shell on its way to the economizer.

Motor Cooling System

CVHE compressor motors are cooled with liquid refrigerant; see Figure 5 for a schematic illustration of this pressurized system.

Liquid refrigerant flows from the condenser sump to the bottom of the compressor motor, Figure 7, where it enters the motor chamber through a control orifice. As the liquid refrigerant touches the warmer motor components, a portion of it flashes to a gas and cools the motor. This "flash" gas, along with any excess liquid refrigerant, then drains to the second-stage of the economizer.

Because of the positive pressure differential between the condenser and economizer, proper refrigerant flow through the motor is maintained at all load conditions.

Figure 5 - CVHE
Compressor Lubrication and
Motor-Cooling Systems

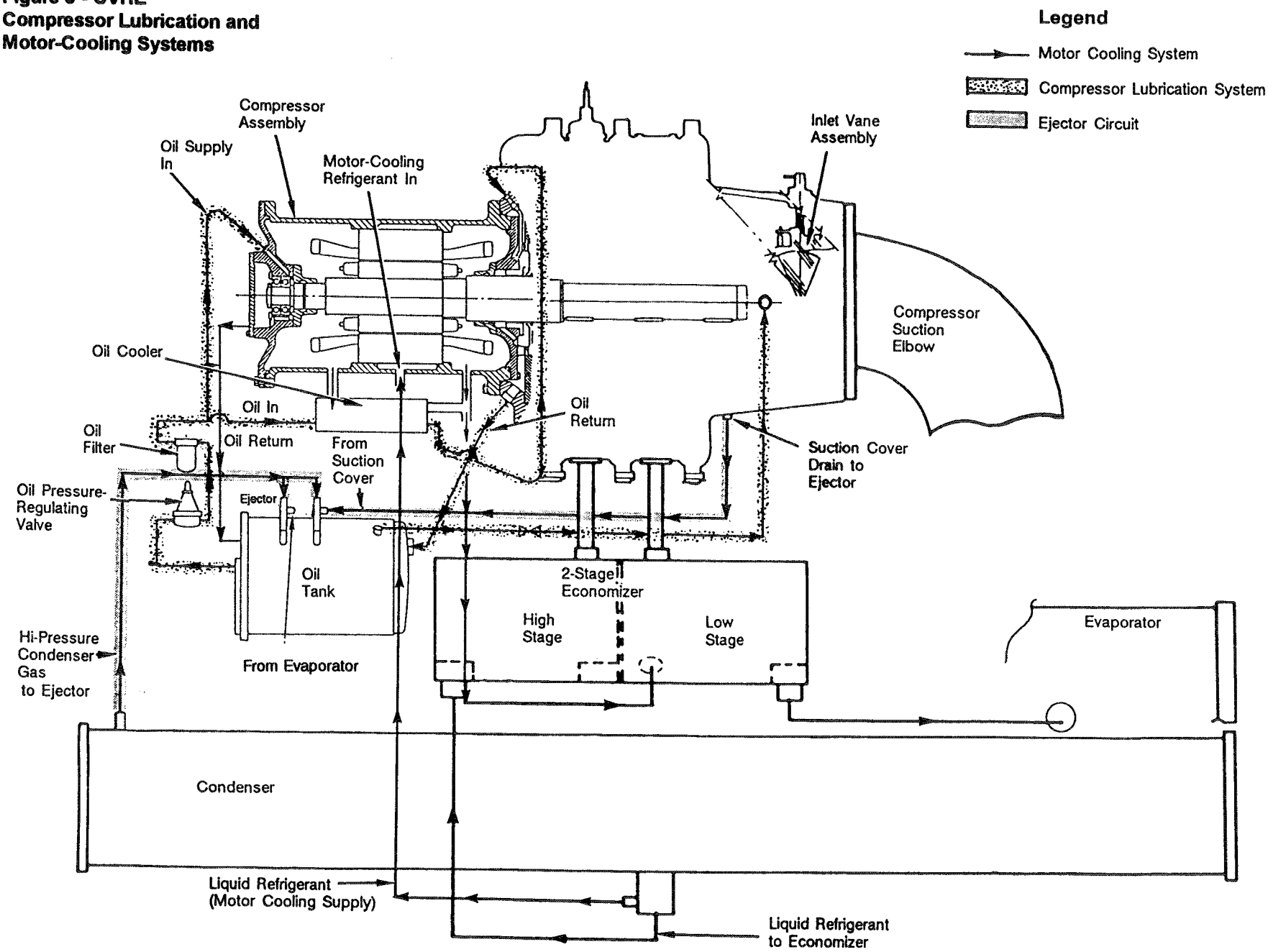

Figure 6
CVHE/CVHF Oil Cooler Assembly

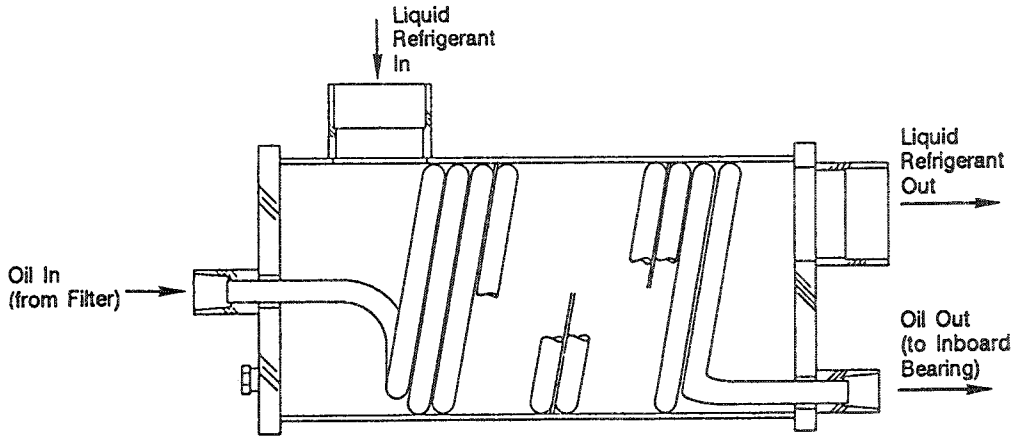

4532-2900-41

Figure 7
CVHE Motor Cooling System

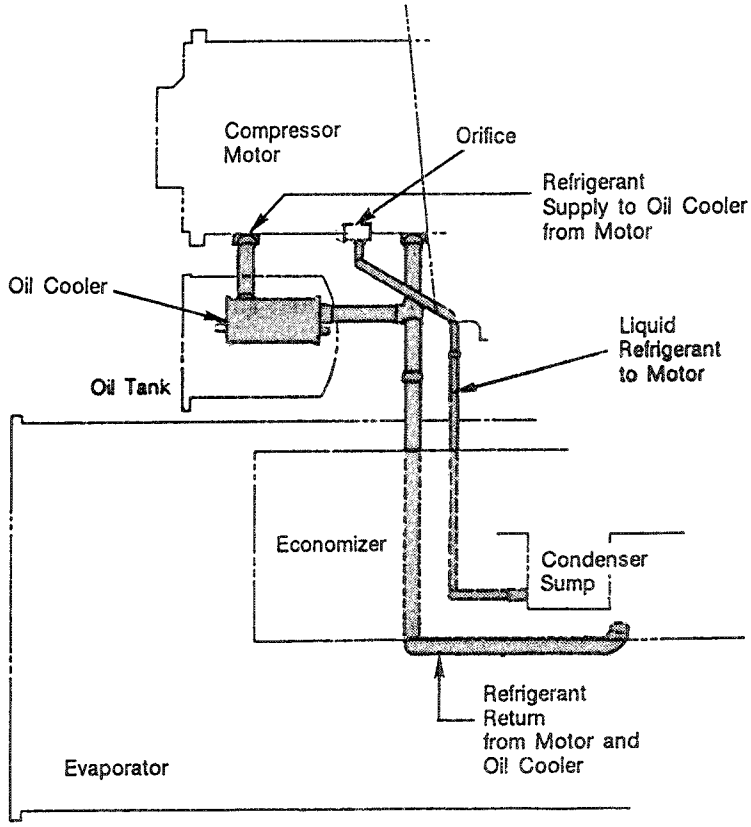

4533-0798

Mechanical Operation - CVHF

Overview

The following description applies to the Trane Model CVHF centrifugal chiller only. Refer to the appropriate operation manual for refrigeration cycle descriptions of other models.

Each CVHF unit is composed of 5 basic components:

-- the evaporator;
-- 2-stage compressor ;
-- water-Cooled condenser;
-- single-stage economizer, and;
-- related interconnecting piping.

A heat-recovery or auxiliary condenser can be factory-added to the basic unit assembly to provide a heat-recovery cycle.

Figure 8 illustrates the general component layout of a typical CVHF chiller.

CVHF cooling-only and heat re-recovery modes of operation are described in the following sections. A pressure/enthalpy diagram (shown in Figure 9) is provided to further illustrate unit operation.

Cooling-Only Cycle

When the CVHF is functioning in the cooling mode, liquid refrigerant is distributed along the length of the evaporator and sprayed through small holes in a distributor (i.e., running the entire length of the shell) to uniformly coat each evaporator tube. Here, the liquid refrigerant absorbs enough heat from the system water circulating through the evaporator tubes to vaporize.

The gaseous refrigerant is then drawn through the eliminators (which remove droplets of liquid refrigerant from the gas), first-stage variable inlet guide vanes, and into the first-stage impeller.

Note: Inlet guide vanes are designed to modulate the flow of gaseous refrigerant to meet system capacity requirements; they also prerotate the gas allowing it to enter the impeller at an optimal angle that maximizes efficiency at all load conditions.

Compressed gas from the first-stage impeller is discharged through the second-stage variable guide vanes and into the second-stage impeller. Here, the refrigerant gas is again compressed, and then discharged into the condenser.

Baffles within the condenser shell distribute the compressed refrigerant gas evenly across the condenser tube bundle. Cooling tower water, circulated through the condenser tubes, absorbs heat from the refrigerant, causing it to condense. The liquid refrigerant then flows out of the bottom of the condenser, passing through an orifice plate and into the economizer.

The economizer reduces the energy requirements of the refrigeration cycle by eliminating the need to pass all gaseous refrigerant though both stages of compression. See Figure 10. Notice that some of the liquid refrigerant flashes to a gas because of the pressure drop created by the orifice plate, thus further cooling the liquid refrigerant. This flash gas is then drawn directly from the economizer into the second-stage impellers of the compressor. The remaining liquid refrigerant flows out of the economizer, passes through another orifice plate and into the evaporator.

Free Cooling, heat Recovery and Auxiliary Condenser Cycles

Refer to the CVHF section of Mechanical Operation.

Figure 8
General Component Identification - Trane CVHF

End View

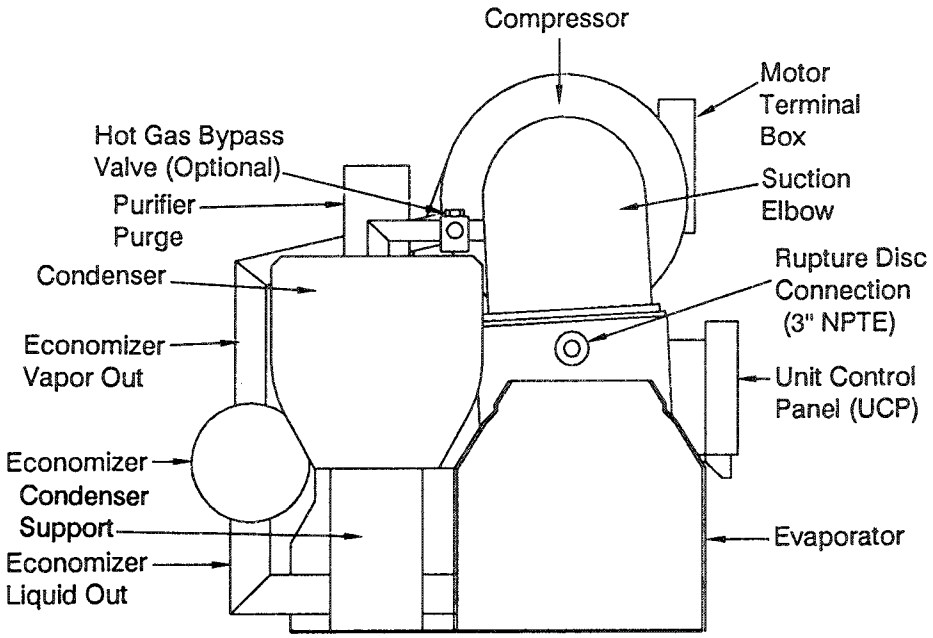

Front View

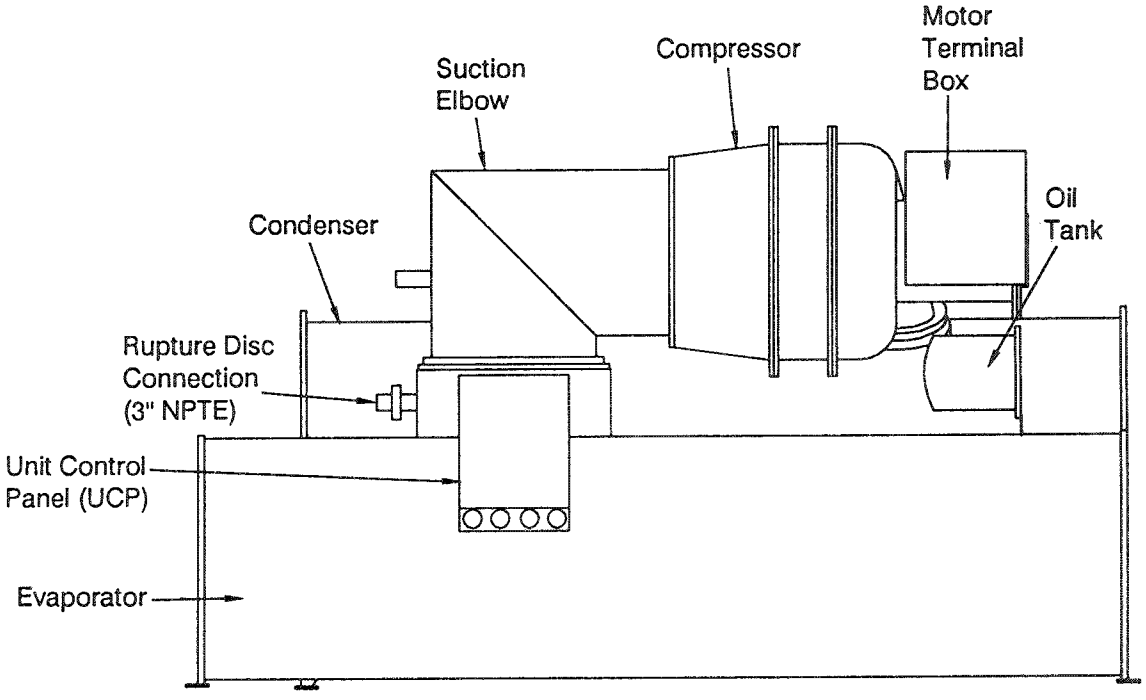

Figure 9
CVHF Pressure/Enthalpy Curve

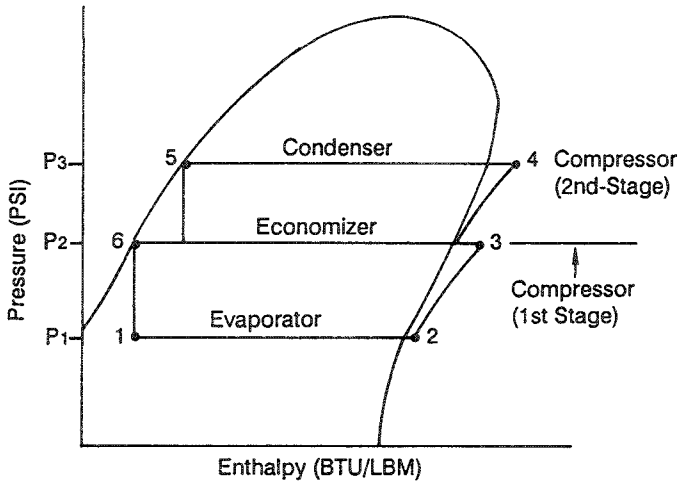

Figure 10
CVHF Economizer Operation

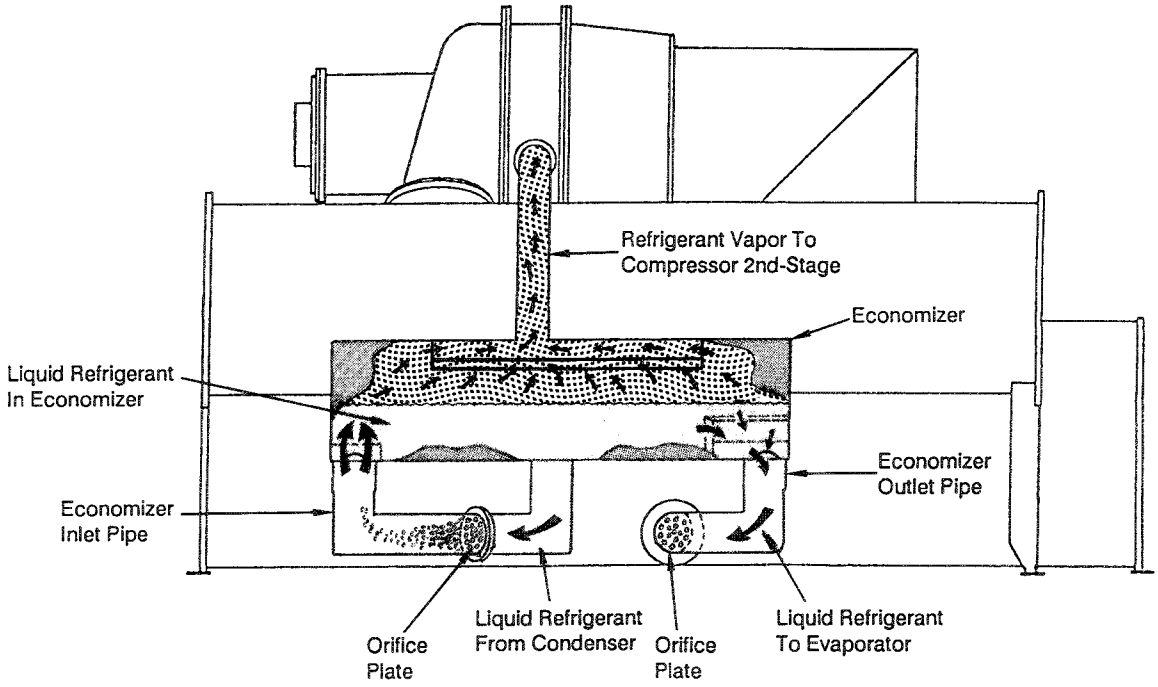

Compressor Lubrication System - CVHF

The CVHF compressor lubrication system, which supplies oil to the compressor motor bearings, is illustrated in Figure 11.

Oil is pumped from the oil tank (i.e., by a pump and motor located within the tank) through an oil pressure-regulating valve designed to maintain a net oil pressure of 12 to 18 psid. It is then filtered and sent to the compressor motor bearings. The oil filter assembly is equipped with refrigeration valves to isolate the filter during filter replacement.

From the bearings, the oil drains back to the oil tank through return lines.

To ensure proper lubrication and prevent refrigerant from condensing in the oil tank, a 1000-watt heater is secured to the oil tank exterior. Operating in response to a signal from the UCP, this heater energizes as needed to maintain an oil tank temperature of 140 to 145 F (60-63 C) when the chiller is not running. When the chiller is operating, the temperature of the oil tank is typical 115 to 160 F (46-72 C).

WARNING:

Use caution while working on certain areas of the unit. Surface temperatures may exceed 150° F on the compressor discharge, oil tank (heater), oil filter, and oil lubrication lines.

The oil tank is vented between the compressor inlet vanes and the first-stage impeller suction cover. During normal system operation, motor barrel pressure is greater than that of the oil tank. Therefore any gaseous refrigerant that enters the motor bearing cavities is drawn toward the oil tank where it is removed by the vent line.

A dual eductor system is used to reclaim oil from the suction cover and from the evaporator, and deposits it back into the oil tank. These eductors use high pressure condenser gas to draw the oil from the suction cover and evaporator back to the eductors, from the eductors the oil is discharged to the top of the oil tank.

Note: CVHFs utilize a time delay relay and solenoid valve that temporarily close the oil sump vent line during the chiller start sequence. This prevents the loss of oil pressure that can occur during start-up by isolating the oil sump from the low-pressure cavity at the opposite end of the sump vent line.

Liquid refrigerant is used to cool the oil supply to the inboard motor bearing. Oil entering the oil cooler assembly from the oil tank (via the regulating valve and filter) flows into a coil inside the cooler shell. As the oil passes through this coil, it is cooled by a mixture of gaseous and liquid refrigerant that surround the coil exterior. Once the cooled oil leaves the cooler shell, it flows directly to the inboard motor bearing, and eventually returns to the oil tank.

The refrigerant-side of the oil cooler is piped into the return circuit of the motor cooling system. Part of the refrigerant that is used to cool the compressor motor passes through the oil cooler shell on its way to the economizer.

Motor Cooling System

CVHF compressor motors are cooled with liquid refrigerant. This pressurized cooling system is illustrated in Figure 12.

Liquid refrigerant flows from the condenser sump to the bottom of the compressor motor where it enters the motor chamber through a control orifice. When the liquid refrigerant contacts the warmer motor components, a portion of it flashes to a gas and cools the motor. This "flash" gas, along with any excess liquid refrigerant, then drains to the evaporator sump.

Because of the positive pressure differential between the condenser and evaporator, proper refrigerant flow through the motor is maintained at all load conditions.

Figure 11
CVHF Motor Lubrication

Left End View

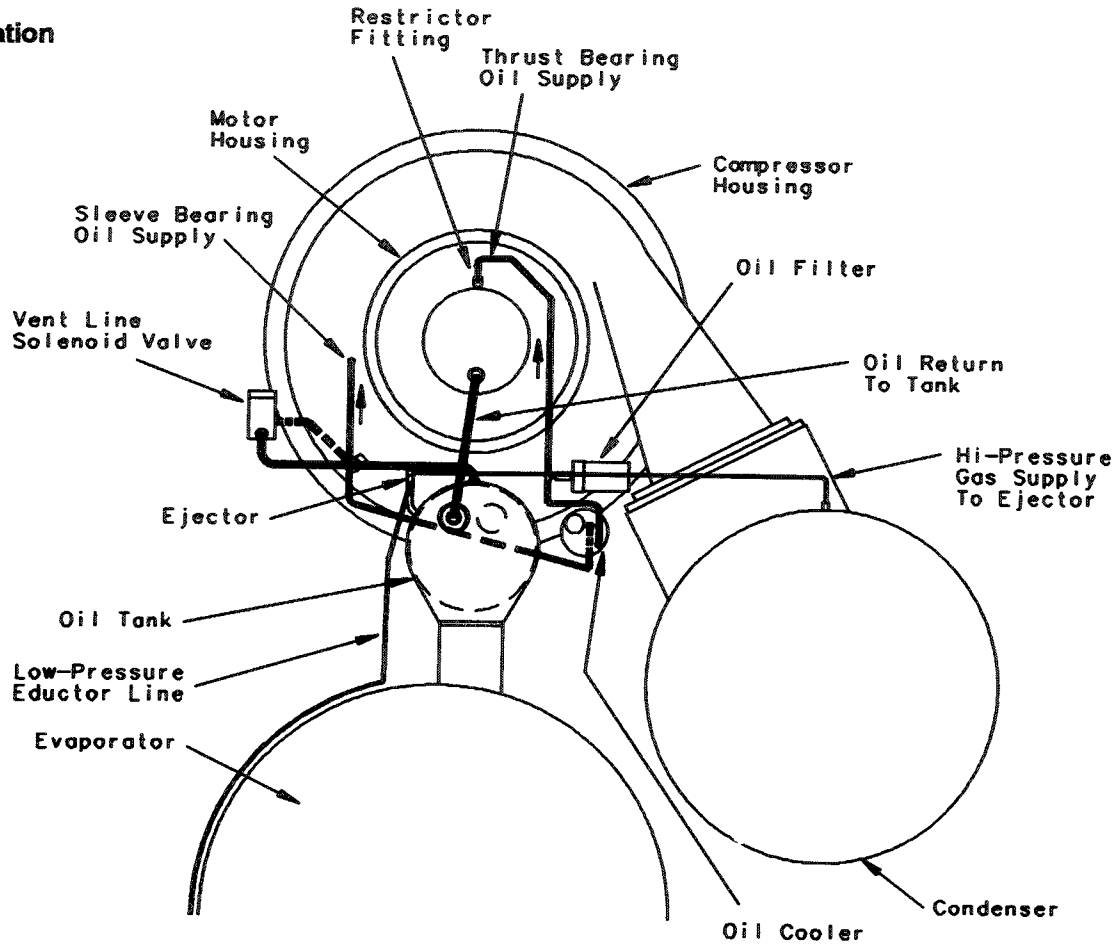

Back View

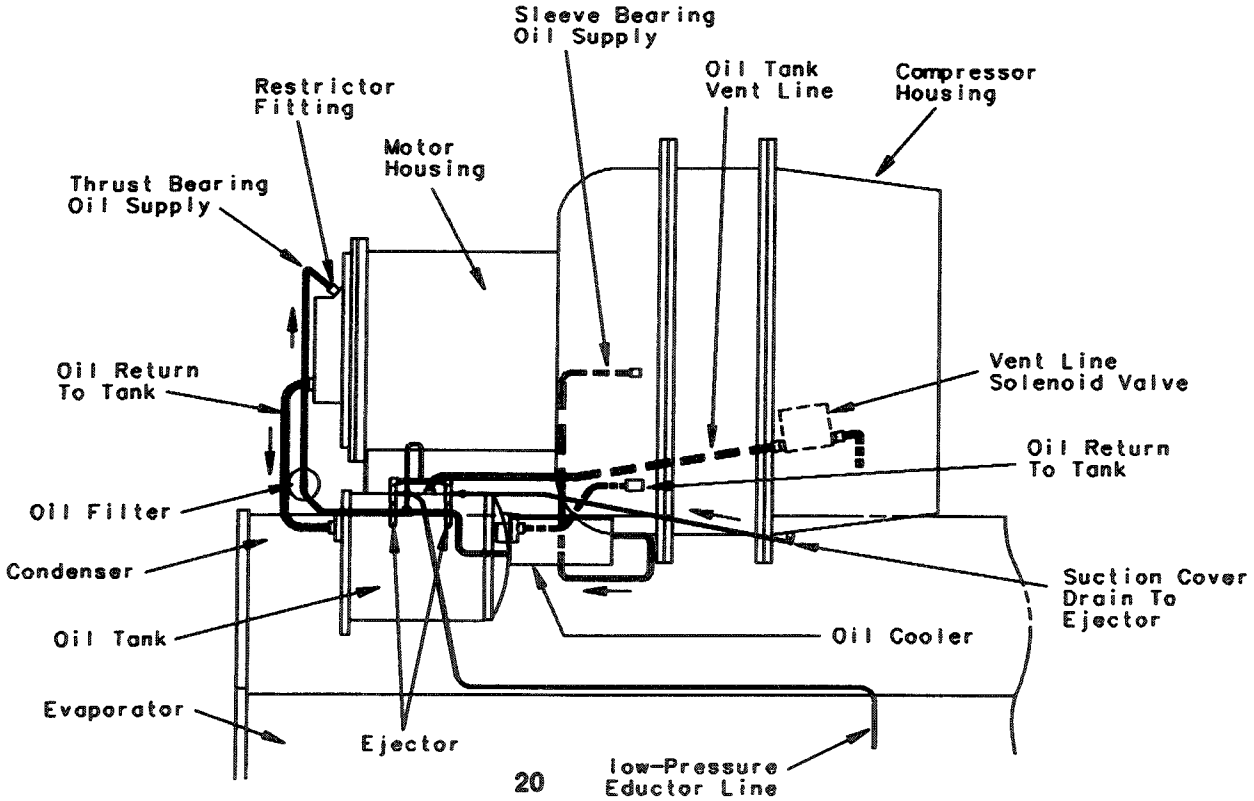

Figure 12
CVHF Motor Cooling System

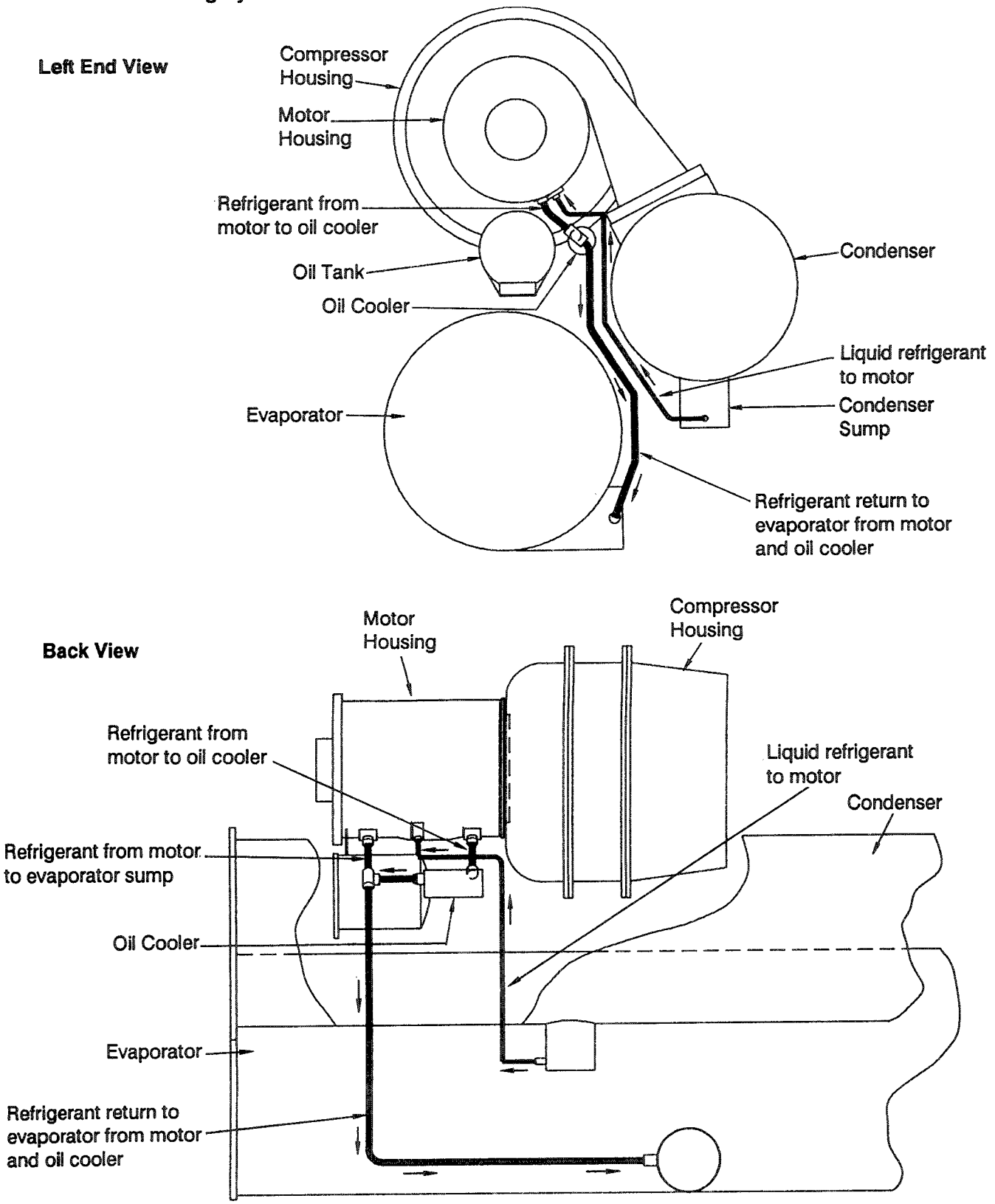

Free Cooling Cycle (Optional)- CVHE/CVHF

Based on the principle that refrigerant migrates to the coldest area in the system, the free cooling option adapts the basic chiller to function as a simple heat exchanger. However, it does not provide control of the leaving chilled water temperature.

If condenser water is available at a temperature lower than the required leaving chilled water temperature, the operator manually stops the compressor and starts the free cooling cycle by moving the free cooling switch to the "On" position. This optional switch on the unit control panel is illustrated in the "Chiller Control System" manual.

Several components must be factory-supplied or -installed to equip the unit for free cooling operation:

– a refrigerant gas line, including an electrically-actuated shutoff valve, between the evaporator and condenser;

– a valved liquid return line, including an electrically-actuated shutoff valve, between the condenser sump and the evaporator;

– a liquid refrigerant storage vessel;

– additional refrigerant; and,

– a free cooling selector switch on the unit control panel.

When the chiller operator initiates changeover to the free cooling mode, the shutoff valves in the liquid and gas lines open; UCP (i.e., unit control panel) control logic prevents the compressor from energizing. Liquid refrigerant then drains (by gravity) from the storage tank into the evaporator and floods the tube bundle. See Figure 4.

Since the temperature and pressure of the refrigerant in the evaporator are higher than in the condenser (i.e., because of the difference in water temperature), the refrigerant in the evaporator vaporizes and travels to the condenser. Cooling tower water causes the refrigerant to condense, and it flows (again, by gravity) back to the evaporator.

This compulsory refrigeration cycle is sustained as long as a temperature differential exists between condenser and evaporator water. The actual cooling capacity provided by the free cooling cycle is determined by the difference between these temperatures which, in turn, determines the rate of refrigerant flow between the evaporator and condenser shells.

If the system load exceeds the available free cooling capacity, the operator must manually initiate changeover to the mechanical cooling mode by adjusting the free cooling switch to the "Off" position. The gas and liquid line valves then close and compressor operation begins. Refrigerant gas is drawn out of the evaporator by the compressor, where it is then compressed and discharged to the condenser.

Most of the condensed refrigerant initially follows the path of least resistance by flowing into the storage tank. This tank is vented to the economizer sump through a small bleed line; when the storage tank is full, liquid refrigerant must flow through the bleed line restriction. Because the pressure

drop through the bleed line is greater than that of the orifice flow control device, the liquid refrigerant flows normally from the condenser through the orifice system and into the economizer.

Note: During changeover from free cooling to mechanical cooling, the refrigerant transfer process is completed within 3 minutes. The micro-computer-based control system prevents carry-over by not allowing the unit to load for a period of two minutes.

Heat Recovery Cycle (Optional)

"Heat recovery" is designed to salvage the heat that is normally rejected to the atmosphere through the cooling tower, and put it to beneficial use.

For example, a high-rise office building may require simultaneous heating and cooling during the winter months. With the addition of a heat recovery cycle, heat removed from the building cooling load can be transferred to areas of the building that require heat. (Keep in mind that the heat recovery cycle is only possible if a cooling load exists to act as a heat source.)

To provide a heat recovery cycle, a heat-recovery condenser is added to the unit; see Figure 2. Though physically identical to the standard cooling condenser, the heat-recovery condenser is piped into a heating circuit rather than to the cooling tower.

During the heat recovery cycle, the unit operates just as it does in the "cooling only" mode except that the cooling load heat is rejected to the heating water circuit rather than to the cooling tower water circuit.

When hot water is required, the heating water circuit pumps energize. Water circulated through the heat-recovery (or auxiliary) condenser tube bundle by the pumps absorbs cooling-load from the compressed refrigerant gas discharged by the compressor. The heated water is then used to satisfy heating requirements.

Auxiliary Condensers

Unlike the heat-recovery condenser (which is designed to satisfy comfort heating requirements), the auxiliary condenser serves a preheat function only, and is used in those applications where hot water is needed for use in kitchens, lavatories, etc. While the operation of the auxiliary condenser is physically identical to that of the heat-recovery condenser, it is comparatively smaller in size, and its heating capacity is not controlled.

Trane does not recommend operating the auxiliary condenser alone because of its small size.

Chiller Control System

Unit Control Panel

CVHE and CVHF safety and operating controls are housed in the UCP 695 unit control panel. (Panel layout is illustrated in Figure 13.)

Based on control function, the UCP695 panel can be partitioned into 2 major "sections":

1. The "microcomputer-based" controls, which include the relay output module (1U1), power supply output module (1U2) and micro module (1U3); and,

2. The electromechanical control devices (e.g., pressure switches, gauges, counters.)

Major components within each of these control groups are described below.

Relay Output Module (1U1)

Consisting of terminal strip 1TB1, this module allows control of the following electrical circuits using relay contact closures:

-- vanes open;
-- vanes close;
-- condenser water pump;
-- purge;
-- "head relief" request ;
-- alarm relay ; and,
-- free cooling and auxiliary free cooling relays (optional).

Connection points of standard and optional UCP (i.e., Unit Control Panel) output signals are indicated on the typical electrical schematic provided in the Eiectrical Sequence of Operation section of this manual.

Power Supply Output Module (1U2)

Like 1U1, power supply output module 1U2 also uses relay contact closures to enable UCP control of the following electrical circuits on 1TB2:

-- reset relay;
-- stop relay;
-- overload relay;
-- compressor start relay;
-- transition relay; and,
-- oil heater and oil pump relays.

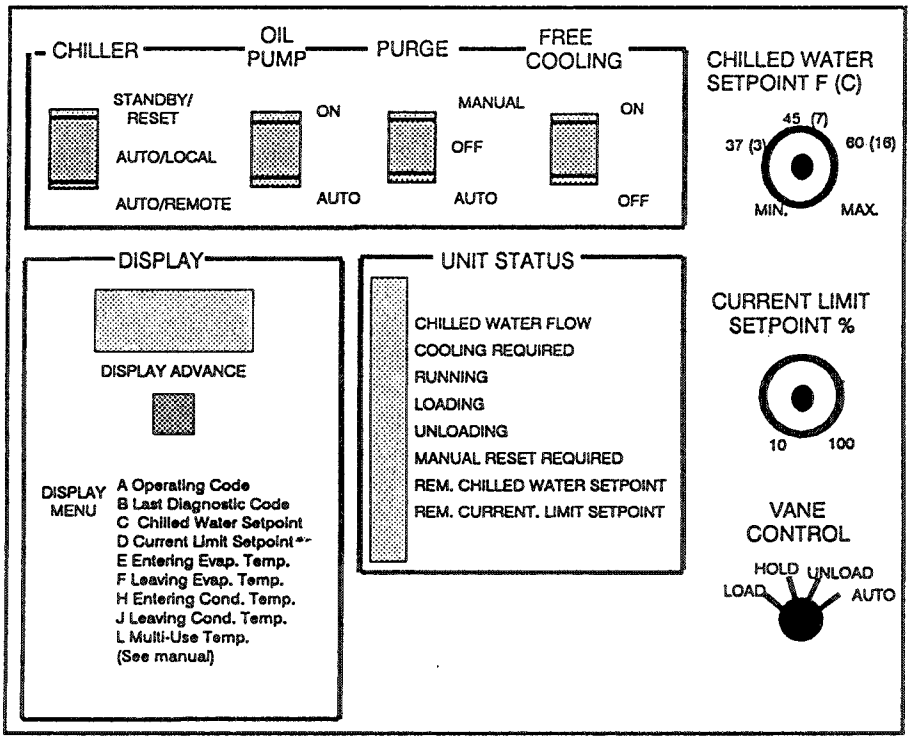

Figure 13
UCP695 Control Panel Layout - CVHE/CVHF

Micro Module (1U3)

Consisting of terminal strips 1TB6, 1TB3 and 1TB4, the input portion of this module "accepts" signals from a variety of standard sensor sources:

-- leaving chilled water and evaporator refrigerant temperature sensors;
-- chilled water and condenser water flow interlock circuits;
-- "vane actuator closed" limit switch;
-- differential oil pressure switch;
-- 3-phase current signals from the auxiliary current transformers;
-- oil and motor winding temperature sensors.

(Figure 14 illustrates the relative locations of the sensors that provide 1U3 with temperature inputs.) Figure 15 shows assembly of Temperature Sensor.

Based on these inputs, micro module 1U3:

a. executes the start and stop sequence;
b. Controls chilled water temperature in response to the setpoint by modulating the position of the inlet guide vanes;

c. Monitor's key chiller operating parameters and "acts" to prevent the chiller from reaching and shutting down on an operating limit;

d. Provide compressor/motor protection.

The human (operator) interface portion of micro module 1U3 is composed of a display window, a display advance pushbutton, status indicator lights, and a series of control knobs and switches. These devices enable the operator to establish chiller control settings, and monitor chiller operating and diagnostic conditions.

Additional information on these components is provided later in this section under "Operator Interface: and "Service Interface".

In addition to the standard micro module features just described, 2 mutually exclusive control options are also available at the micro module level:

1. **Serial Communications Interface Link (SCI). (Optional)** The SCI provides an intelligent interface with a Trane SCP (System Control Panel), allowing the chiller to accept set points and commands from a remote location, and communicate condition and diagnostic information to the SCP.

2. **Chilled Water Reset (CWR). (Optional)** CWR enables the UCP to reset the chilled water setpoint based on load (i.e., evaporator return water temperature) or ambient temperature. (See the Control Options section for further information.)

Electromechanical Controls

Other control devices installed in the unit control panel (but separate from the microcomputer-based controls) are described below.

See Table 1 for control cut-in and cutout points. (Unit time delays and nominal fault time-out periods are also included therefore fore your reference.)

Condenser high Pressure Cutout Switch (1S1)
This 2-position, normally closed switch monitors the pressure in the condenser. (See Table 1 for control set points.)

Differential Oil Pressure Switch (1S2) Connected between the down stream side of the oil filter and the oil sump, this SPST, normally open switch closes when the pressure differential reaches the point indicated in Table 1.

Hour Meter (1M1)
Mounted on the left-hand side of the control panel enclosure, the non-resettable hour counter accumulates running hours from the time of initial unit start-up. It displays a maximum value of 99999.9 hours before returning to zero.

Start Counter (1M2)
Accumulating compressor motor starts from the time of initial unit start-up, this nonresettable counter displays a maximum value of 99999 compressor starts before staring over. Like the hour meter, it is mounted on the left-hand side of the control panel enclosure.

Pressure Gauges
Four pressure gauge dials are mounted across the lower front of the unit control panel. These dials enable the operator to monitor oil sump (low), oil supply (high), evaporator and condenser pressures.

Advanced Motor Protection

This control package provides the UCP with the features needed to protect the compressor motor from momentary power losses, phase imbalance, phase reversals, and surge (i.e., see note below) by initiating a unit shutdown whenever one of these situations occurs.

Diagnostic codes for each of these conditions appear at the display window to enable the operator to identify which particular electrical abnormally occurred.

Note: The UCP will allow the chiller to operate under "surge" conditions (operating code A 78) for 15 minutes before shutting it down on latching diagnostic b dA.

Figure 14
Micro Module (1U3)
Temperature Sensor Locations

1. For sensor installation instructions, see the installation manual that shipped with the unit. (Sensor electrical connections are shown on the electrical schematic in Figure 15; see Lines 61 through 81.)

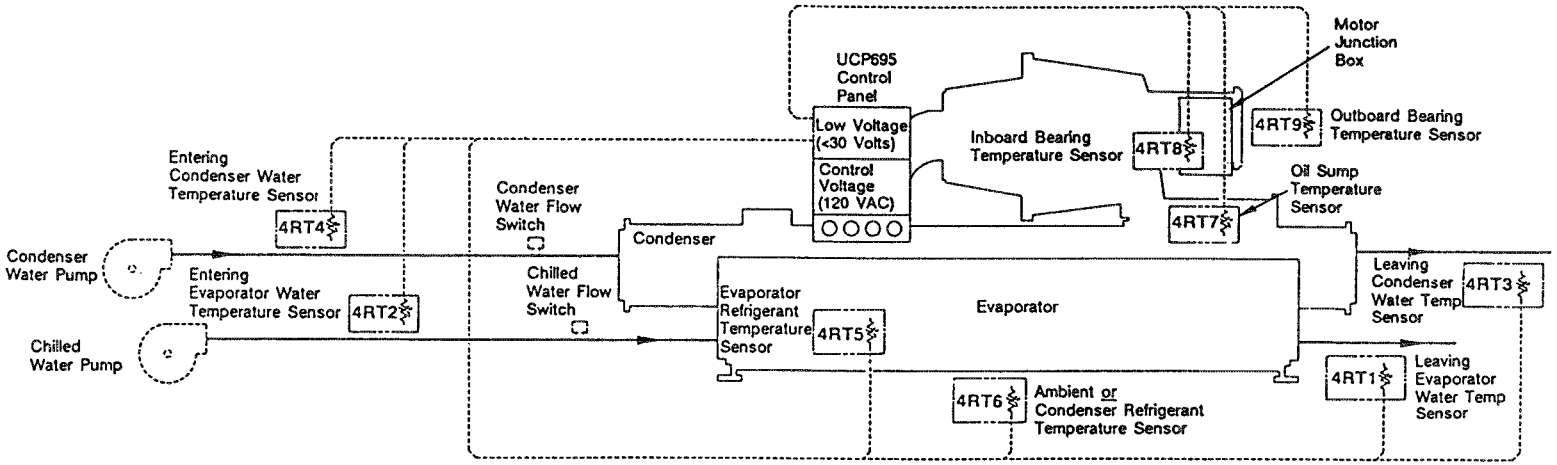

X39470473E

Figure 15
Temperature Sensor Assembly

Temperature Sensor

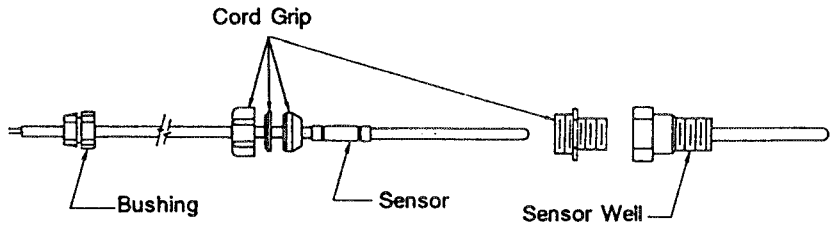

4533-1710E
X13790057

Table 1
Unit Time Delays and Safety Control Cutout Settings

Operating Controls: "Timers"	Timing Interval	System Reset	Operating Code (1)
Prelube (2)	15 seconds	n/a	A 72
Restart Inhibit (3):			
Winding Temp. <165 F (74 C)	2 minutes	n/a	A 70
Winding Temp. ≥ 165 F	15 minutes	n/a	A 70
Since Last Start	30 minutes	n/a	A 70
Post-Lube	2 minutes	n/a	A 79
Free-Cool/Vane Open Inhibit (4)	3 minutes	n/a	A 9
Purifier Purge: (purge switch @ AUTO)	Controlled by purge timer (6)	manual (7)	n/a
Sump Vent Line Interval (8)	100 seconds	n/a	n/a
Safety Controls: Fault Time-Outs	**Timing Interval**	**System Reset**	**Diagnostic Code (1)**
Oil Pressure Overdue (2)	33 seconds	manual	b F2
Transition Complete Overdue	2 seconds	manual	b FO
Transition-from-Start Complete	Max. accel. timer setting	manual	b EE
Condenser Water Flow Overdue	3 minutes	manual	b dC
No Evaporator Water Flow	2 seconds max. w/o flutter	auto	b Ed
Vane Closure Overdue	3 minutes	manual	b FA
Free-Cool Valve Closure Overdue	3 minutes	manual	b F9
Surge	15 minutes	manual	b dA
Safety Controls: Unit Cutouts	**Control "Trip" Point**	**System Reset**	**Diagnostic Code (1)**
Winding Temp. Run Inhibit	265 ± 15 F* 130 ± 9 C*	manual	b E7
Low Oil Temp. Run Inhibit	100± 2 F 38+ 1C	auto	b F3
High Oil Temp. Run Inhibit	180± 2 F 83+ 1C	manual	b F4
High Bearing Temp. Run Inhibit (Optional)	180± 2 F 83+ 1C	manual	b EA, Eb
Lvg. Water Temp. Low Limit (Std. Range)	35± 1 F 2+ .5 C	auto	n/a
Differential Oil Pressure Switch — Closes	11.5 - 15 psid	manual	b E8
Differential Oil Pressure Switch — Opens	9+ 1 psid		
High Pressure Cutout Switch — Std. Units	15± 1 psig	manual	b F5
High Pressure Cutout Switch — ASME Units	25+ 1 psig (9)		
Oilless Purge "Extend Run" Press. Switch — Closes	20 psig	n/a	n/a
Oilless Purge "Extend Run" Press. Switch — Opens	25 psig		

Notes:
1. See tables 3 and 4 for complete code listing.
2. Since prelube timing can begin at any point during 33- second "oil pressure overdue" interval, actual elapsed time to "establish oil pressure" and "prelube" can be anywhere from 15 to 48 seconds.
3. The 165 F inhibit applies only when unit is first powered-up, or if chiller switch is turned from STANDBY/RESET to AUTO/ LOCAL or to AUTO/REMOTE. Otherwise, 30 minutes must elapse between compressor starts.
4. Operating code **A 9** will appear on operator display only when free cooling valve limit switches have opened.
5. See "Electrical Sequence of Operation" . Refer to Purifier Purge Operation Manual for details.
6. Reset at 3S6 or 6S6 on purge panel.
7. This timer closes sump vent line during prelube and during unit start sequence.
8. Fixed differential of 3-6 psid for switch closure on a rise in differential oil pressure.

Operator Interface

Monitoring devices and all chiller control components requiring adjustment for normal chiller, operations are accessible without opening the unit control panel door. These components that area part of micro module 1U3 are illustrated in Figure 13 and discussed below.

Chiller Switch

Located above the "Display" block on the UCP, this 3-position switch enables the owner/operator to define chiller control:

Standby/Reset. When power is applied to the unit with the chiller switch set at "Standby/Reset", the UCP is activated but unit operation is prohibited; operating code A 0 appears on the display.

This switch position can be used by all the operator or service technician to clear a latching diagnostic (i.e., fault that requires manual reset), or to shut down the unit.

Auto/Local. This switch position allows the chiller to run automatically, using the operational setpoints set at the unit.

Auto/Remote. With the chiller switch in this position, the unit runs automatically using the setpoints established at a remote device and communicated to the chiller with the optional serial communication-interface (SCI).

If no setpoints are sent by the remote controller, the UCP uses the operational setpoints set at the unit control panel.

Note: When the unit is equipped with the SCI option, a remote device can place the unit in the "Standby/Reset" mode even though the chiller switch is positioned at "Auto/Remote". However, a latching diagnostic condition at the unit cannot be cleared from a remote device.

Oil Pump Switch

A 2-position oil pump switch is located to the right of the chiller switch, above the display window. Switch position functions are described below:

On. This switch position provides continuous operation of the oil pump, even when the chiller switch is positioned at "Standby/Reset".

Note: The "On" switch position is designed for use by service personnel only; do not leave it in this position! Compressor start-up will not occur if the oil pump switch is set at "On" (i.e., latching diagnostic b E8 will flash alternately with operating code A 72 on the UCP's display).

Auto. Oil pump operation is controlled by the UCP, ensuring oil flow when the compressor is running. This is the normal switch operating position.

Purge Switch

Located next to the oil pump switch (see Figure 14), the purge switch enables the owner/operator to select 1 of 3 purge operational modes.

Manual. This switch position provides continuous operation of the purge compressor regardless of centrifugal compressor operation, or the position of the chiller switch.

Off. Purge operation will not occur when the purge switch is set at this position.

WARNING: To prevent injury or death due to electrical shock, open unit disconnect switch before servicing to ensure purge unit is de-energized.

Auto. This is the normal switch operating position. With this switch set at AUTO, the purge will run when the CenTraVac is in powered cooling operation.

If the chiller switch is set at STANDBY/RESET and the purge switch is set at AUTO, the purge unit is also shut down.

Note: On those CVHE/CVHF units equipped with more than one condenser, purge only from the active condenser. Use the manual valves provided to isolate the inactive condenser.

Chilled Water Setpoint

Used to set the leaving chilled water temperature, this manually adjustable potentiometer is located at the right-hand side of the window in the control panel door. See Figure 13, notice that dial settings range from "Min" to "Max", with intermediate To view the front panel chilled water setpoint, adjust the vane control switch to "Hold" and press the "Display Advance" push-button until the " I" code prefix appears on the display. The integer value (in increments of 1F or 1 C) immediately to the right of " I" is the UCP's chilled water setpoint.

Remember that the standard chiller operating range is 37 F to 60 F. (3 to 60.8 C) while the temperature range for extended operation is 20 F to 70 F (-6 to 22 C.)

Note: To view the active chilled water setpoint, check the entry for code prefix "C" of the operator's menu. When the chiller switch is set at "Auto/Remote" and the "Remote Chilled Water Setpoint" status light is lit, the "C" value displayed was entered at a remote system control panel (SCP).

Current Limit Setpoint

Located directly below the chilled water setpoint control, this manually adjustable potentiometer is used to register the desired current limit setpoint. Dial settings range from 40% to 100% of the compressor rated-load-amps. (RLA) value.

To view the front panel current limit setpoint, adjust the van control switch to "Hold" and press the "Display Advance" push-button until the "-" code prefix appears. The integer value (indicated in increments of 1T) at the immediate right of "-" is the UCP's current limit setpoint.

Note: To check the active current limit setpoint, locate the entry displayed for code prefix "d" in the operator's menu. Whenever the chiller switch is set at "Auto/ Remote" and the "Remote Current Limit Setpoint: status light is lit, the "d" value displayed was entered at a remote SCP.

Vane Control Switch

A 4-position, compressor inlet guide vane control switch is located beneath the current limit setpoint control. Each switch position is described below.

Load. As long as the vane control switch remains in this position, the "vanes open" (1U1Q7) relay is continuously energized and automatic vane control is suspended during the "Normal Run" mode (A 74).

Manual loading does not take precedence over the current limit (A 75), condenser limit (A 76) or evaporator limit (A 77) modes of operation.

Hold. With the vane control switch set at "Hold', both the "vanes open: (1U1Q7) and "vanes close" (1U1Q8) relays are de-energized, so the inlet guide vanes remain at their present position. In other words, automatic vane control is suspended when the chiller is operating in the "Normal Run" mode (A 74).

However, keep in mind that a current limit (A 75) condenser limit (A 76), or evaporator limit (A 77) operating mode will override the manual "Hold" setting.

Note: Positioning the vane control switch remains in this position, the "vanes close" relay (1U1Q8) is continuously energized; automatic vane control is suspended regardless of the chiller's operating mode.

Auto. Inlet guide vane position is automatically controlled by the UCP when the vane control switch is set at this normal operating position.

Free Cooling Switch (Optional)

Free cooling enables the chiller to function as a simple heat exchanger, using refrigerant as the working fluid; however, it does not provide control of the leaving chilled water temperature.

When condenser water is available at temperatures lower than the desired chilled water temperature, the free cooling option provides "average selection" chiller capacity without operating the compressor.

A 2-position free cooling switch, located next to the purge switch, allows the operator to select from 1 to 2 operating positions:

On. Placing the free cooling switch in this position forces the chiller to enter the free cooling mode (A 9) ; the compressor shuts down if the unit is operating in the powered cooling mode.

Note: Operating code A 9 appears on the display once the free cooling valves are open. (The unit cannot return to the powered cooling mode until these valves are closed.) Remember, too, that when the UCP is equipped with the SCI option, a remote device can "turnoff" free cooling opera operation while the free cooling switch is set at "On".

Off. This setting enables normal chiller operation within the parameters established for the powered cooling mode.

Unit Status Lights

A series of 8 status indicator lights are located directly below the purge switch. These blue lights along with the operating and diagnostic information found on the display allow the operator to monitor chiller operations. The purpose of each status indicator light is described below.

Chilled Water Flow
Illumination of this light indicates that chilled water flow switch 5S2 is closed.

Cooling Required. This light only illuminates when the UCP proves chilled water flow and detects a cooling requirement (i.e., leaving chilled water temperature exceeds the chilled water setpoint by a value greater than the differential-to-start criteria).

Running. Illumination of this status light indicates that:

-- the unit is running (or is in one of the "run" modes);
-- the chiller switch is set at "Auto/Local" or "Auto/Remote"; and,
-- the start sequence (or , "transition") is complete.

It also remains lit through the chiller's post-lube cycle after the compressor shuts down.

Loading. When this light glows, the UCP is loading the unit (i.e., the vane actuator is driving the vanes open).

Unloading. When this light is on, the UCP is unloading the unit (i.e., the vane actuator is driving the vanes closed).

Note: It is normal for the "Loading" and "Unloading" status lights to flash on and off in short pulses.

Manual Reset Required. Illumination of this light indicates that the UCP detected a "latching diagnostic condition, and shut down the chiller. Operation cannot resume until the UCP is manually reset (i.e., chiller switch is adjusted to "Standby/Reset", then back to "Auto/Local" or "Auto/Remote").

Remote Chilled Water Setpoint. When this light is on, the UCP is ignoring its front panel setpoint, and is using the chilled water setpoint:

-- determined by the optional chilled water reset module, or;

-- entered at a remote source (e.g., an SCP699 system control panel, or a Trane BAS).

If remote communications are severed, the UCP "defaults" to the control value of its chilled water setpoint potentiometer.

Remote Current Limit Setpoint. Illumination of this light indicates that the UCP is using a current limit setpoint communicated from a remote source (e.g., SCP or Trane BAS) , and is ignoring its from panel setpoint.

Again, if remote communications are interrupted, the UCP "defaults" to the control value set with the current limit setpoint potentiometer.

UCP Display

The UCP's display consists of a blue, 4-digit vacuum fluorescent display and a "Display Advance" push-button; both are located to the left of the unit status indicator lights. See Figure 13.

The first letter of the 4-character display identifies the type of data shown in the display window; a list of these indicator codes, along with their meanings, is provided in Table 2. An abbreviated version of this list also appears on the face of the UCP, directly below the "Display Advance" pushbutton. The two remaining alphanumeric characters of the display indicate

characters of the display indicate unit operating mode, diagnostic condition, setpoints or actual temperatures as defined by the code prefix. Refer again to Table 2, as well as to Tables 3 and 4.

Note: If the UCP detects a diagnostic condition, it alternately flashes the appropriate diagnostic code and unit operating mode (at the time of unit shutdown) on the display.

Codes prefixed by a "C" or "d" are followed by the corresponding setpoint value (chilled water or current limit, respectively) presently used to control the chiller. If the chiller switch is set at "Auto/Local", the setpoint values displayed are those set manually at the UCP695 control panel.

however, when the chiller switch is set at "Auto/Remote" and the applicable status indicator lights are on, the displayed setpoint values were established at a remote device (e.g., an SCP699 or Trane BAS).

"E", "F", "H" and "J" code prefixes are followed by an actual measurement of a system parameter (e.g., entering evaporator water temperature). (Code prefixes "E", "H" and "J" represent sensor options: if these sensors are not installed a bar (--) appears on the display.)

Table 2
Display Menus

Operator's Menu		Servicemans's Menu (1, 2)	
Code Prefix	**Parameter Description**	**Code Prefix**	**Parameter Description (and Display Range)**
A	Operating Mode (see Table 16)	A	Operating Mode (see Table 16)
b	Last Diagnostic (see Table 17)	b	Last Diagnostic (see Table 17)
C	Active Chilled Water Setpoint: Std. Range = 37-60 F (3-16 C) Extd. Range = 20-70 F (-6-22 C)	t	Panel Chilled Water Setpoint (---, 20-70 F, ---)(---, -6-22 C, ---)
d	Active Current Limit Setpoint (40% thru 100% RLA)	—	Panel Current Limit Setpoint (---, 40% thru 100% RLA, ---)
E	Entering Evap. Water Temp. (Opt.) (---, 12-91 F, ---)(---, -11-33 C, ---)	_	Evaporator Refrigerant Temp. (3) (b Ad, -4-42 F, ---)(b Ad, -20-6 C, ---)
F	Leaving Evap. Water Temperature (b Ab, 12-91 F, ---)(b Ab, -11-33 C, ---)	L	Control Response Setpoint (1 thru 237)
H	Entering Cond. Water Temp. (Opt.) (---, 28-142 F, ---)(---, -2-62 C, ---)	O	Start Differential Setpoint (2-10 F) ((-17 thru -12 C)
J	Leaving Cond. Water Temp. (Opt.) (---, 28-142 F, ---)(---, -2-62 C, ---)	P	Condenser Limit Setpoint (80-120% HPC)
L	Multi-Use Temperature (4) (---, -5-135 F, ---)	U	Evap. Refg. Trip Setpoint (b A3) Std. Range = 29-34 F (-1 thru 1 C) Extd. Range = 0-34 F (-18 thru 1 C)

Notes:
1. To redefine the "operator's menu" to the "serviceman's menu" turn vane control switch to HOLD.
2. For additional information on any item listed in the "serviceman's menu", contact a qualified service organization.
3. Actual measured evaporator refrigerant temperature.
4. Examples of "Multi-Use Temp." applications are: Cond. Lvg. Refg. Temp.; CWR Ambient Temp.; CWR Temp. from Analog Input.

Figure 16 (Continued)

Adjusting the vane control knob to the "Hold" position redefines the display code prefixes to indicate the "local" (or front panel) chilled water and current limit spiniest, actual evaporator refrigerant temperature, and settings for control response, start differential condenser limit and evaporator refrigerant "trip" point as shown in Table 2.

Important! Do not leave selector knob in "Hold", control of leaving chilled water temperature will be suspended. Only "safeties" are functional!

Note: While in the "serviceman's menu", the integer values displayed for the panel chilled water, condenser limit and evaporator refrigerant trip setpoints represent the entire adjustment range for these potentiometers. Unless the chiller is specifically designed for "extended range" operation, the UCP will adhere to the operating parameters established for "standard range" chillers.

Use the "Display Advance" push-button to scroll from one menu entry to the next. Remember that a blank display marks the end of the "operator's menu"; to return to the top of the menu, simply press this push-button once.

Important! Advancing past the "Last Diagnostic Code" entry in either menu automatically clears, the code registered there from the UCP's memory!

Service Interface

Following is a brief description of UCP control components that can only accessed by opening the control panel door. Each of these divides, as illustrated in "Control Options, is set at initial unit start-up by a qualified service technician.

WARNING: To prevent injury or death due to electrical shock, always open unit disconnect switch before opening control panel door.

CAUTION: To ensure proper chiller operation, never tamper with any UCP controls located behind the panel door without first consulting a qualified Trane service technician.

Table 3
Codes for Unit Operating Modes

3-Character Code	Operating Mode Description
Blank	Power Off
A 0	Standby/Reset
A 1	Auto (Local or Remote)
A 9	Free Cooling
A 70	Restart Inhibit
A 71	Establish Cond. Water Flow
A 72	Start
A 74	Run: Normal
A 75	Run: Current Limit (1)
A 76	Run: Condenser Limit (2)
A 77	Run: Evaporator Limit (3)
A 78	Run: Surge Condition
A 79	Post-Lube
A 88	Reset
A100	External Inhibit (Remote Start/Stop)

Notes:
1. As current limit setpoint is approached, 1U3 restricts further opening of the inlet guide vanes.
2. As condenser limit setpoint is reached, 1U3 restricts additional compressor loading to avoid shutdown on high condenser pres- sure (b F5) and initiates "head relief request" (i.e., optional relay).
3. 1U3 restricts further opening of the inlet guide vanes to avoid unit shutdown on low evaporator refrigerant temperature (b Fb).
4. 1U3 limits compressor loading and initiates "head relief request" (i.e., optional relay) when unit enters a surge condition. An automatic unit shutdown occurs if unit remains in surge for 15 minutes (b dA).

Table 4
Diagnostic Codes

Diag. Code	Diagnostic Explanation	Reset Type	Diag. Code	Diagnostic Explanation	Reset Type
b A3	Evaporator Refrig. Temp. Range	Manual	b E7	High Motor Temperature	Manual
b A4	Motor Temperature Sensor #1	Manual	b E8	Differential Oil Pressure Switch	Manual
b A5	Max. Acceleration Time Range	Manual	b E9	Stop Relay	Manual
b A7	Motor Temperature Sensor #2	Manual	b EA	High Inboard Brg. Temp. (Sen. #1)	Manual
b A8	Motor Temperature Sensor #3	Manual	b Eb	High Outbrd. Brg. Temp. (Sen. #2)	Manual
b A9	Oil Temperature Sensor	Manual	b EC	Running Overload	Manual
b Ab	Leaving Water Temp. Sensor	Manual	b Ed	Chilled Water Flow	Auto
b AC	Cond. Refrig. Pressure Sensor (3)	Manual	b EE	Max. Acceleration Time Exceeded	Manual
b Ad	Evap. Refrig. Temperature Sensor	Manual	b F0	Transition	Manual
b AE	Ambient Temperature Sensor (3)	Manual	b F1	Running External Interlock (3)	Manual
b AF	Bearing Sensor #1 (Inboard) (3)	Manual	b F2	Low Oil Pressure	Manual
b b0	Bearing Sensor #2 (Outboard) (3)	Manual	b F3	Low Oil Temperature	Auto
b d9	Extended Power Loss	Auto	b F4	High Oil Temperature	Manual
b dA	Surge	Manual	b F5	High Condenser Refrig. Pressure	Manual
b dC	Condenser Water Flow Overdue	Manual	b F7	Condenser Water Flow	Auto
b dE	Condenser Pressure Start Inhibit	Manual	b F8	Improper Unit Identification	Manual
b E2	Momentary Power Loss	Auto	b F9	Free-Cooling Valves	Manual
b E3	Phase Imbalance	Manual	b FA	Actuator	Manual
b E4	Phase Loss	Manual	b Fb	Low Evaporator Refrig. Temp.	Manual
b E5	Phase Reversal	Manual	b FF	Unit Control Module	Manual

Notes:
1. Check the "Manual Reset Required" status indicator light to determine if manual reset is necessary.
2. It is not possible to clear a latching diagnostic condition (i.e., one requiring manual system reset) at the unit from a higher-level device (e.g., an SCP699 or Trane BAS).
3. Optional feature.

Clear Restart Inhibit Push-button

By pressing this pushbutton switch (i.e., located to the right of the "Chilled Water Setpoint" potentiometer), the service technician can clear the restart inhibit timer.

CAUTION: The "Clear Restart Inhibit" button is for use only by a qualified service technician. Using this button more than once in 30 minutes may seriously damage the motor.

Control Response Setpoint

(To be set/calibrated by qualified Trane service technician only). Located to the left of the display window, this manually adjustable potentiometer can be set at any position between 1 and 237. (The units used to delimit these settings are arbitrary.)

The control response setting directly affects the vane controller's speed of response to changes in cooling requirements; the lower the control response setting, the slower the response time of the vane controller.

To view the actual control response setting, position the vane control switch at "Hold" and press the "Display Advance" push-button until code prefix" -" appears.

Start Differential Setpoint

(To be set by qualified Trane service technician only). With an adjustment range of 2-10 F (1- 6 C), this manually adjustable potentiometer establishes the number of degrees that the leaving chilled water temperature must rise above setpoint before the unit will start. (It also determines the actual compressor "stop" point; see "Fuse 1F2 Branch Circuit" under Electrical Sequence of Operation for further explanation.)

To display the actual start differential in the display window, position the vane control switch at "Hold" and press the "Display Advance" push-button until code prefix "I I" appears.

Condenser Limit Setpoint (% hpc; Option)

(To be set by qualified Trane service technician only). Optional condenser limit control provides a means for maintaining chiller operation while high head pressure conditions exist.

Notice that the condenser limit potentiometer can be set at any point from 80% to 120% of the rated high pressure control trip point. for standard units with an HPC cutout is 20 to 30 psig.

Once established, the UCP compares this value with condenser refrigerant (head) pressure. As the head pressure approaches the condenser limit setpoint, the UCP either slows/prohibits van opening, or initiates a regulated van closure.

Remember that the condenser high pressure cutout switch (1S1) remains active, and will shut down unit operation on latching diagnostic b F5 (i.e., "high condenser refrigerant pressure") if its trip point is exceeded view the actual condenser limit setpoint on the UCP's display, adjust the vane control knob to "Hold" and press the "Display Advance" push-button until " -" code prefix appears.

Evaporator Refrigerant Trip Setpoint

(To be set by qualified Trane service technician only). With a standard adjustment range of 29 to 34 F (-2 C to 1C), this manually adjustable potentiometer is used to establish the chiller's low refrigerant temperature trip point. An optional "extended range" is also available which provides an adjustment range of 0 to 34 F (1 to 18 C.)

To view the actual control setting, adjust the vane control knob to "Hold" and press the "Display Advance" push-button until the "-" code prefix appears.

Note: Attempting to adjust the evaporator refrigerant trip point below the minimum range value results in a latching diagnostic. (Diagnostic code b A3 will flash alternately on the display with the operating code at the time the minimum range value was violated.)

CAUTION: to assure proper chiller operation, adjustment of this control must always be service technician.

UCP "Summary Sheet"

A summary of UCP operating and diagnostic codes, display menus, timing functions, control cutout points and terminal strip connections along with an illustration of micro module 1U3 is provided of this manual.

Electrical Sequence Of Operation

Overview

This section will acquaint the operation with the control logic governing CVHE /CVHF chillers equipped with UCP695-based control systems. Be sure to refer to the typical wiring schematic shown in Figure 16 when reviewing these step-by-step electrical sequences of operation. Available starter electrical configurations are illustrated by Figure 17.

Note: The typical wiring diagrams in Figures 16 and 17 are representative of standard CVHE/ CVHF units and are provided only for general reference. They may not reflect the actual wiring of your unit. For specific electrical schematic and connection information, always refer to the wiring diagrams that shipped with the chiller.

With the supply power disconnect switch or circuit breaker (2CB1) closed, 120-volt control power is provided through control power transformer 2T4 and a 30-amp starter panel fuse (2F4) to terminal 1TB5-1 in the UCP control panel. From this point, control voltage flows to:

Fuse 1F2, supplying power to micro module 1U3 and the starter control, oil heater, and power supply transformer (1T1) circuits.

Fuse 1F3, supplying power to the oil pump and inlet vane actuator circuits; and,

Fuse 1F4, supplying power to the purge control system. Although these 3 branch circuits energize simultaneously, the functions occurring in each circuit are described separately in the following paragraphs.

Fuse 1F2 Branch Circuit

120-Volt control power passing through fuse 1F2 travels to 5 separate subcircuits:

1. Low-voltage power is provided to micro module 1U3, relay output modul9e 1U1 and power supply output mode 1U2 through fuse 1F5 and power supply transformer 1T1.

2. Oil tank heater 4HR1 may be energized via the normally-open K6 contacts of power supply output module 1U2. (The status of these contacts open or closed is based on input from oil sump temperature sensor 4RT7.)

Note: UCP control logic is designed to energize the oil tank heater as required to maintain a sump temperature of 140° F to 145° F (60 C to 63 C) when the chiller is not running. Micro module 1U3 also monitors sensor 4R7 while the chiller is operating, and will shut down the unit on latching diagnostic b F4 if oil sump temperature reaches 180°F (83 C).

3. Condenser water flow interlock circuit.

4. Chilled water flow interlock circuit.

5. Starter control circuit.

Chilled and Condenser Water Flow Interlock Circuits

Control voltage passing through fuse 1F2 also energizes the chilled and condenser water flow interlock circuits. Closure of flow switches 5S2 and 5S3 along with the auxiliary contacts of water pump contactors 5K1 and 5K2 in the interlock circuits energizes the chilled and condenser water pump relays (1K16, 1K17). Notice that chilled water pump relay 1K16's normally-open, "proof-of-flow" contacts are connected between Terminals 1TB5-12 and 1TB5-13 in the high-voltage section of the UCP control panel. (See Line 41 in Figure 16.)

Closure of the normally-open set of 1K17 contacts (Figure 16, Line 89) is the UCP's "proof-of-flow" signal for the condenser water circuit. Notice that this set of contacts is located in a low voltage (< 80V) input circuit connected to Terminals 1TB3-22 and 1TB3-23 on micro module 1U3.

Micro Module and "Wye-Delta" Starter Control Circuits

While branch circuit fuse 1F2's micro module and "wye-delta"-type starter control subcircuits are separate, their functions are closely coordinated and are discussed together in the following paragraphs.

120-Volt control power enters power supply output module 1U2 at Terminal 1TB2-9. (See Line 16 of Figure 16.) Logic circuits within micro module 1U3 determine the "net" contact status (open or closed) of reset relay K1, stop relay K2 and overload relay K3 based on input signals sent to 1U3 and its timers.

Individual access to the K1, K2 and K3 relays is not possible; however, the "net state" of all 3 relays is available between Terminals 8 and 9 on terminal block 1TB2. When the "net state" of the K1, K2 and K3 contacts along with condenser high pressure switch 1S1 is closed,

Figure 16
Typical Electrical Schematic CVHE/ CVHF w/Unit-Mounted Star Delta Closed Transition Starter

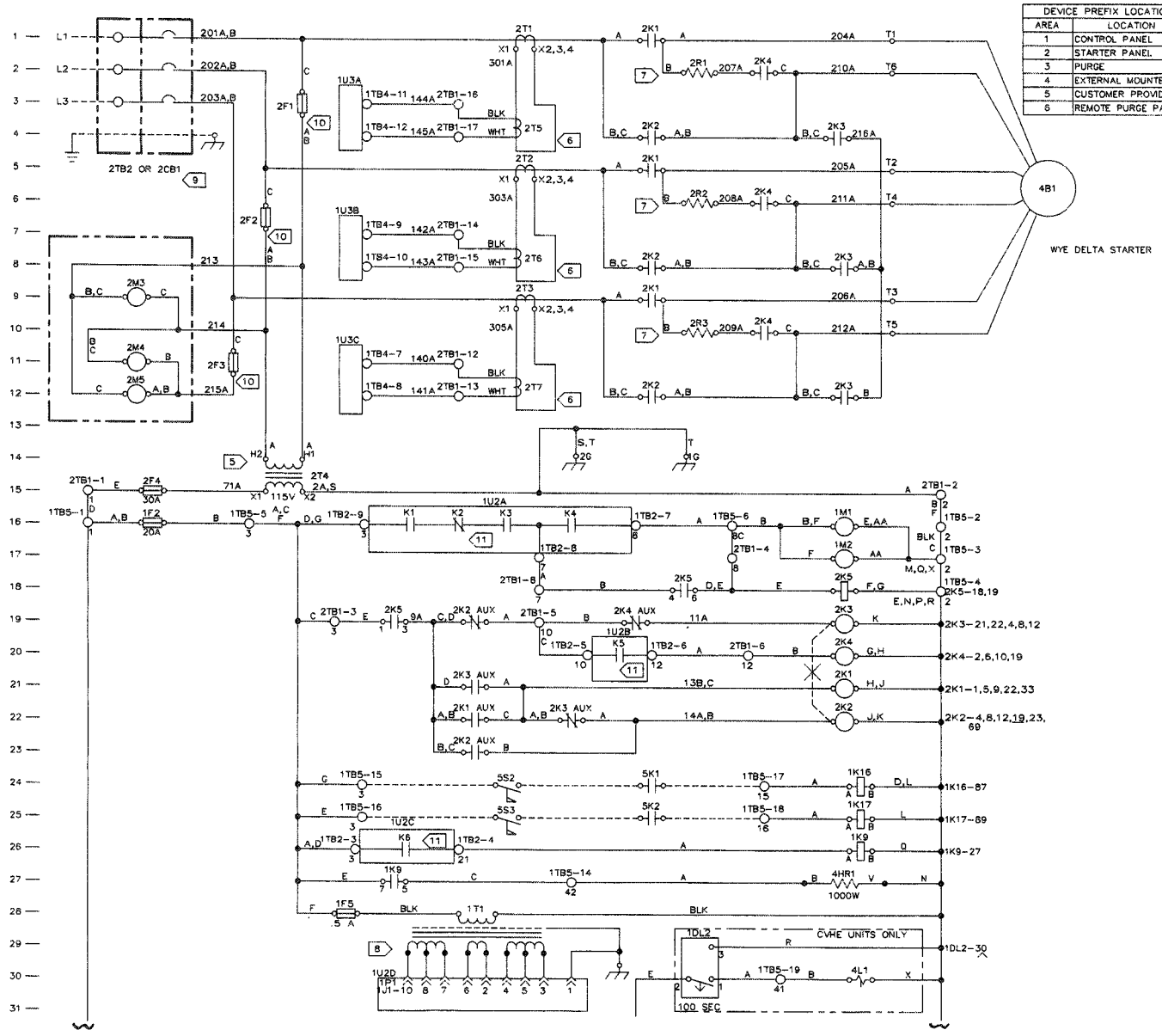

DEVICE PREFIX LOCATION CODE	
AREA	LOCATION
1	CONTROL PANEL
2	STARTER PANEL
3	PURGE
4	EXTERNAL MOUNTED
5	CUSTOMER PROVIDED
6	REMOTE PURGE PANEL

LEGEND		
DEVICE DESIGNATION	DESCRIPTION	LINE NUMBER
1C1	CAPACITOR, OIL PUMP	32
1DL2	VENT LINE INTERV. TIMER	29
1F1	FUSE, OIL PUMP	33
1F2-5	BRANCH CIRCUIT FUSE	16,35, 28,42
1J1-4/1P1-4	POST HEADER POWER SUPPLY	30,85,94
1K8	OIL PUMP STARTER RELAY	33
1K9	OIL TANK HTR RELAY	26
1K16	CWD WTR PUMP RELAY	24
1K17	COND WTR PUMP RELAY	25
1M1	HOUR METER	16
1M2	START METER	17
1R1	RESISTOR PRESS TRANSDUCER	75
1S1	COND. HIGH PRESS SWITCH	95
1S2	OIL PRESS SWITCH	65
1T1	POWER SUPPLY TRANSFORMER	28
1TB1	TERM BLOCK REL OUTPUT	
1TB2	TERM BLOCK POWER SPLY	
1TB3	TERM BLOCK MICRO-MOD INPUT	
1TB4	TERM BLOCK MICRO-MOD INPUT	
1TB5	TERM BLOCK CONTROL PANEL	
1TB6	TERM BLOCK MICRO-MOD INPUT	65,66
1U1A-C	RELAY OUTPUT MODULE	SHEET 2
1U1K3	HEAD RELIEF RELAY	88
1U1K4	ALARM RELAY	85
1U1K6	COND WATER PUMP RELAY	82
1U1Q7	VANES OPEN (TRIAC)	35
1U1Q8	VANES CLOSED (TRIAC)	36
1U2A-F	POWER SUPPLY OUTPUT MOD	SHEET 2
1U2K1	RESET RELAY	16
1U2K2	STOP RELAY	16
1U2K3	OVERLOAD RELAY	16
1U2K4	COMPR.START RELAY	16
1U2K5	COMPR.TRANSITION RELAY	20
1U2K6	OIL HEATER RELAY	26
1U2K7	OIL PUMP RELAY	32
1U3A-D	MICRO MODULE	SHEET 2
1U4	BAS CHILLED WTR RESET	94
2CB1	STARTER CIRCUIT BREAKER	1,2,3
2F1,2,3	PRIMARY STARTER FUSE	3,6,11
2K1	START CONTACTOR	21
2K2	RUN CONTACTOR	22
2K3	SHORTING CONTACTOR	19
2K4	TRANSITION CONTACTOR	20
2K5	PILOT RELAY	18
2M3,4,5	VOLT METER	9,11,12
2M6,7,8	AMPMETER	56,58,60
2R1-9	TRANSITION RESISTOR	2,6,10
2T1-3	CURRENT TRANSFORMERS	1,5,9
2T4	CONTROL POWER TRANSFORMER	14
2T5,6,7	CURRENT TRANSFORMERS	4,7,11
2TB1	CONTROL TERMINAL BLOCK	
2TB2	LINE TERMINAL BLOCK	1,2,3
3B5	CONDENSING UNIT	52
3B6	PUMPOUT COMPRESSOR	49
(6)3DL2	TIME DELAY RELAY	44
(6)3DS1	CONDENSER RUN LIGHT	53
(6)3DS2	FAULT INDICATION LIGHT	46
(6)3DS3	BYPASS LIGHT	47
(6)3K4	CONTROL RELAYS	45
3L1 & 3	SOLENOID VALVES	50,51
(6)3M1	MINUTE METER	48
(6)3S4	SERVICE SWITCH	51
(6)3S5	BYPASS SWITCH	45
(6)3S6	TIMER RESET SWITCH	44
3S15	TEMPERATURE SWITCH	49

Figure 16
(Continued from previous page)

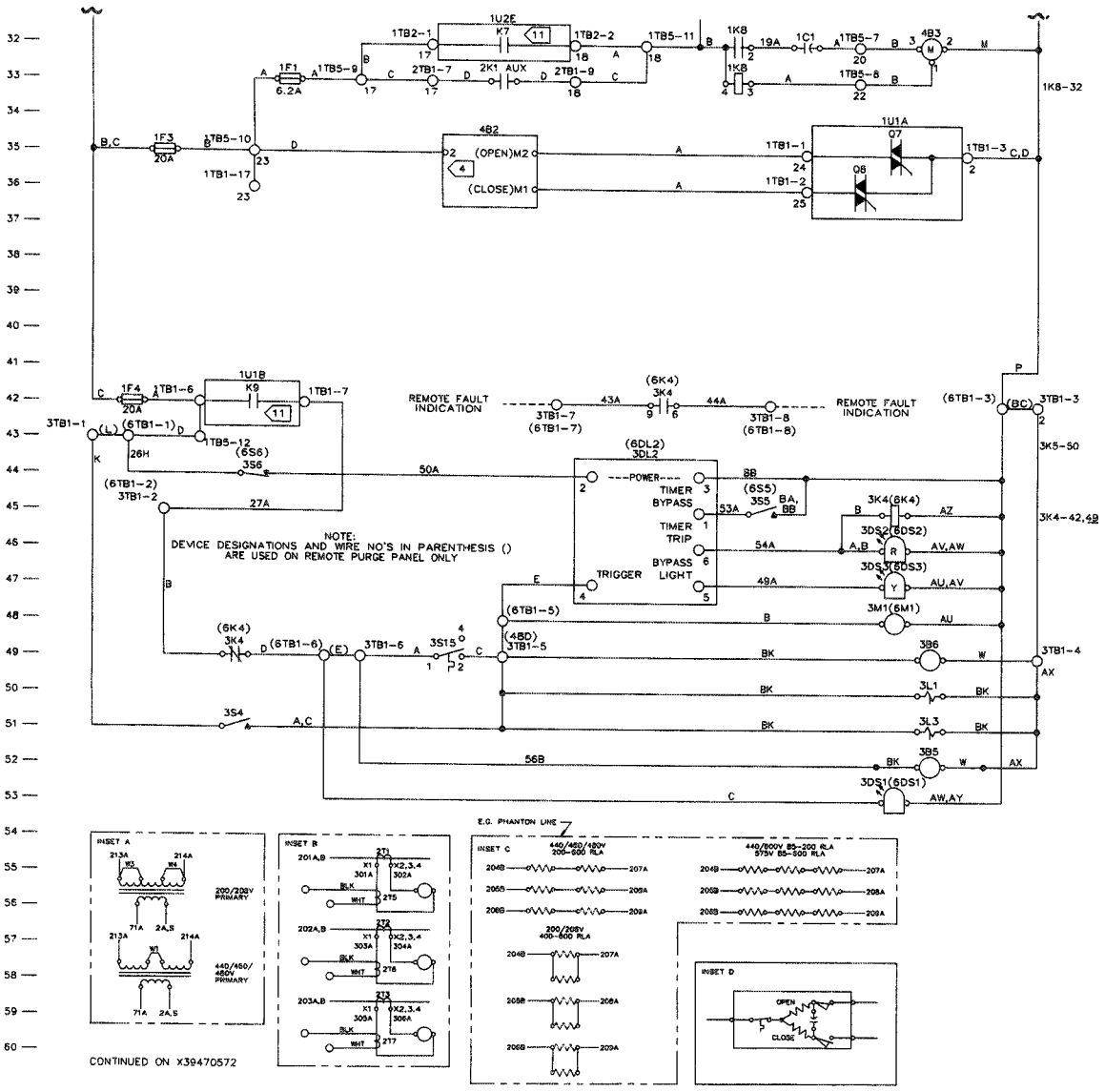

3TB1	PURGE TERMINAL BLOCK	
(6TB1)	(REMOTE PANEL TERM. BLOCK)	
4B1	COMPRESSOR MOTOR	5
4B1R2,3,4	MOTOR WINDING TEMP SENSOR	69,71,73
4B2	VANE ACTUATOR MOTOR	35
4B3	OIL PUMP MOTOR	32
4HR1	OIL TANK HEATER	27
4L1	VENT LINE SOLENOID	30
4RT1-9	THERMISTOR	69-80
5DS1	ALARM INDICATION	85
5K1	CHWD WATER PUMP CONT. AUX	N/A
5K2	COND WATER PUMP CONT. AUX	82
5K3	ALARM RELAY	84
5K4	HEAD RELIEF REQUEST CONT.	88
5S2	CHWD WATER FLOW SWITCH	24
5S3	COND WATER FLOW SWITCH	25
5S4	INTERLOCK SWITCH	67

NOTES:

1. SOLID LINES INDICATE TRANE WIRING. DASHED LINES INDICATE FIELD WIRING. PHANTOM LINES INDICATE OPTIONAL FEATURES OR ALTERNATE CIRCUITRY.
2. UNLESS OTHERWISE NOTED, ALL SWITCHES ARE SHOWN AT 25°C (77°F), AT ATMOSPHERIC PRESSURE, AT 50% RELATIVE HUMIDITY, WITH ALL UTILITIES TURNED OFF AND AFTER A NORMAL SHUTDOWN HAS OCCURED.
3. NUMBERS ALONG THE RIGHT SIDE OF THE SCHEMATIC DESIGNATE THE LOCATION OF THE CONTACTS BY LINE NUMBER. AN UNDERLINED NUMBER INDICATES A NORMALLY CLOSED CONTACT. AN OPEN ARROWHEAD BELOW THE LINE NUMBER POINTING UPWARD INDICATES A TIMED CONTACT WHICH BEGINS TIMING WHEN ENERGIZED.

4. SEE INSET D FOR TYPICAL INTERNAL WIRING OF ACTUATOR.
5. SEE INSET A FOR OTHER VOLTAGES. 575/600 VOLT PRIMARY SHOWN.
6. SEE INSET B FOR OPTIONAL AMPMETERS.
7. SEE INSET C FOR OTHER VOLTAGES. RESISTORS SHOWN FOR 200/208V AND 200-400 RLA.
8. SEE SERVICE MANUAL FOR INDIVIDUAL SECONDARY VOLTAGES.
9. THREE PHASE POWER SUPPLY VOLTAGE SEE UNIT NAMEPLATE.
10. 20A FOR 208V; 10A FOR 440/460/480V; OR 8A FOR 575/600V.
11. RELAY COILS NOT SHOWN. CONTACTS ARE CONTROLLED BY THE LOGIC OF THE MICRO-MODULE (1U3). SEE SEQUENCE OF OPERATION LINES 102 - 115 NEXT PAGE.

⚠ WARNING

DISCONNECT ELECTRIC POWER SUPPLY BEFORE SERVICING TO PREVENT INJURY OR DEATH DUE TO ELECTRICAL SHOCK.

AVERTISSEMENT

DEBRANCHER DU CIRCUIT D'ALIMENTATION ELECTRIQUE AVANT L'ENTRETIEN POUR ÉVITER BLESSURE OU MORT PAR ELECTROCUTION.

⚠ CAUTION

USE COPPER CONDUCTORS ONLY TO PREVENT EQUIPMENT DAMAGE. UNIT TERMINALS ARE NOT DESIGNED TO ACCEPT ANY OTHER WIRING.

ATTENTION

UTILISER SEULEMENT DES CONDUCTEURS EN CUIVRE POUR EVITER D'ENDOMMAGER L'EQUIPMENT. LES BORNES NE SONT PAS PREVUES POUR AUTRES TYPES DE FILS CONDUCTEURS.

X39470571A

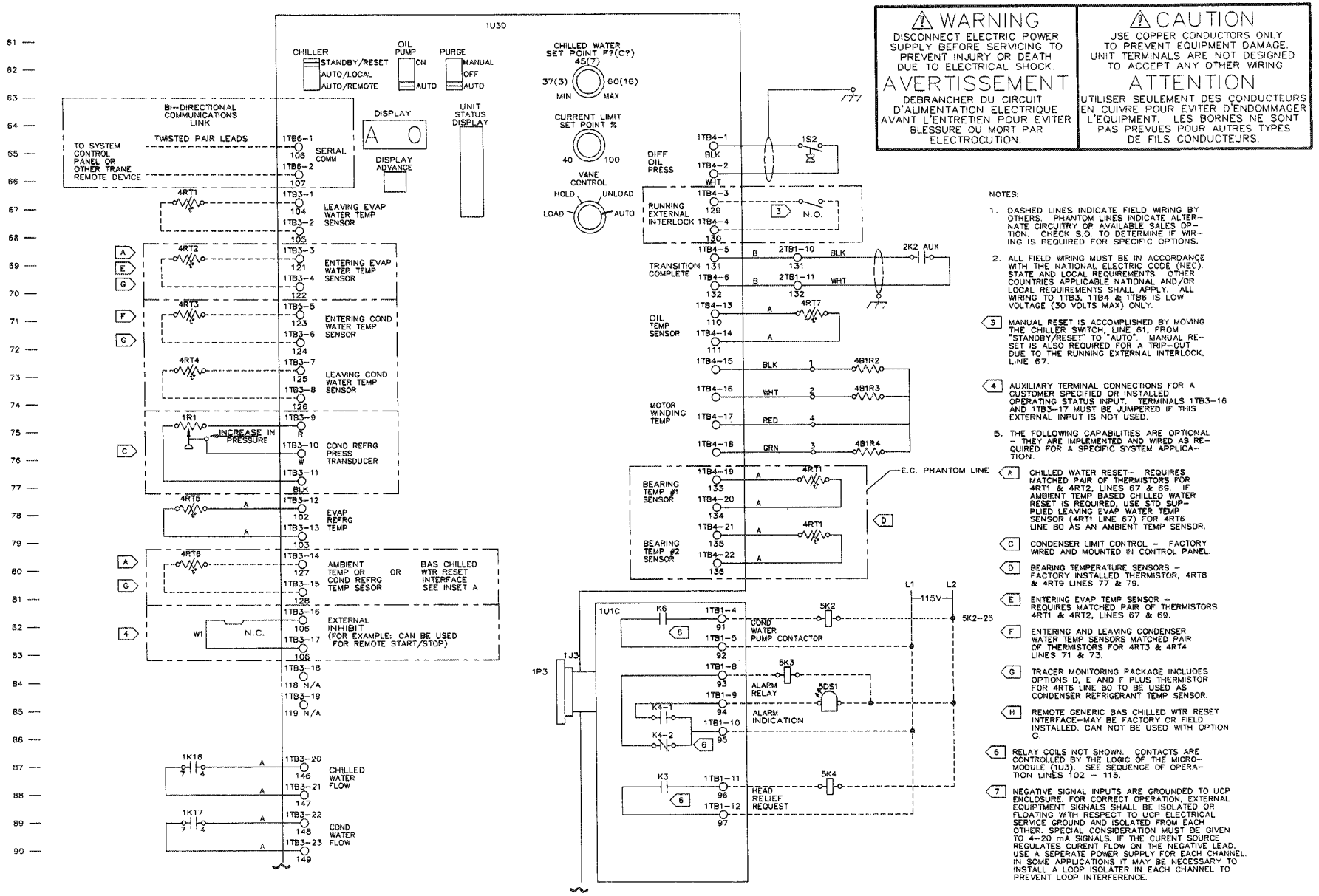

⚠ WARNING

DISCONNECT ELECTRIC POWER SUPPLY BEFORE SERVICING TO PREVENT INJURY OR DEATH DUE TO ELECTRICAL SHOCK.

AVERTISSEMENT

DEBRANCHER DU CIRCUIT D'ALIMENTATION ELECTRIQUE AVANT L'ENTRETIEN POUR EVITER BLESSURE OU MORT PAR ELECTROCUTION.

⚠ CAUTION

USE COPPER CONDUCTORS ONLY TO PREVENT EQUIPMENT DAMAGE. UNIT TERMINALS ARE NOT DESIGNED TO ACCEPT ANY OTHER WIRING

ATTENTION

UTILISER SEULEMENT DES CONDUCTEURS EN CUIVRE POUR EVITER D'ENDOMMAGER L'EQUIPMENT. LES BORNES NE SONT PAS PREVUES POUR AUTRES TYPES DE FILS CONDUCTEURS.

NOTES:

1. DASHED LINES INDICATE FIELD WIRING BY OTHERS. PHANTOM LINES INDICATE ALTERNATE CIRCUITRY OR AVAILABLE SALES OPTION. CHECK S.O. TO DETERMINE IF WIRING IS REQUIRED FOR SPECIFIC OPTIONS.
2. ALL FIELD WIRING MUST BE IN ACCORDANCE WITH THE NATIONAL ELECTRIC CODE (NEC). STATE AND LOCAL REQUIREMENTS. OTHER COUNTRIES APPLICABLE NATIONAL AND/OR LOCAL REQUIREMENTS SHALL APPLY. ALL WIRING TO 1TB3, 1TB4 & 1TB6 IS LOW VOLTAGE (30 VOLTS MAX) ONLY.

[3] MANUAL RESET IS ACCOMPLISHED BY MOVING THE CHILLER SWITCH, LINE 61, FROM "STANDBY/RESET" TO "AUTO". MANUAL RESET IS ALSO REQUIRED FOR A TRIP-OUT DUE TO THE RUNNING EXTERNAL INTERLOCK, LINE 67.

[4] AUXILIARY TERMINAL CONNECTIONS FOR A CUSTOMER SPECIFIED OR INSTALLED OPERATING STATUS INPUT. TERMINALS 1TB3-16 AND 1TB3-17 MUST BE JUMPERED IF THIS EXTERNAL INPUT IS NOT USED.

5. THE FOLLOWING CAPABILITIES ARE OPTIONAL - THEY ARE IMPLEMENTED AND WIRED AS REQUIRED FOR A SPECIFIC SYSTEM APPLICATION.

[A] CHILLED WATER RESET- REQUIRES MATCHED PAIR OF THERMISTORS FOR 4RT1 & 4RT2, LINES 67 & 69. IF AMBIENT TEMP BASED CHILLED WATER RESET IS REQUIRED, USE STD SUPPLIED LEAVING EVAP WATER TEMP SENSOR (4RT1 LINE 67) FOR 4RT6 LINE 80 AS AN AMBIENT TEMP SENSOR.

[C] CONDENSER LIMIT CONTROL - FACTORY WIRED AND MOUNTED IN CONTROL PANEL.

[D] BEARING TEMPERATURE SENSORS - FACTORY INSTALLED THERMISTOR, 4RT8 & 4RT9 LINES 77 & 79.

[E] ENTERING EVAP TEMP SENSOR - REQUIRES MATCHED PAIR OF THERMISTORS 4RT1 & 4RT2, LINES 67 & 69.

[F] ENTERING AND LEAVING CONDENSER WATER TEMP SENSORS MATCHED PAIR OF THERMISTORS FOR 4RT3 & 4RT4 LINES 71 & 73.

[G] TRACER MONITORING PACKAGE INCLUDES OPTIONS D, E AND F PLUS THERMISTOR FOR 4RT6 LINE 80 TO BE USED AS CONDENSER REFRIGERANT TEMP SENSOR.

[H] REMOTE GENERIC BAS CHILLED WTR RESET INTERFACE--MAY BE FACTORY OR FIELD INSTALLED. CAN NOT BE USED WITH OPTION G.

[6] RELAY COILS NOT SHOWN. CONTACTS ARE CONTROLLED BY THE LOGIC OF THE MICRO-MODULE (1U3). SEE SEQUENCE OF OPERATION LINES 102 - 115.

[7] NEGATIVE SIGNAL INPUTS ARE GROUNDED TO UCP ENCLOSURE. FOR CORRECT OPERATION, EXTERNAL EQUIPMENT SIGNALS SHALL BE ISOLATED OR FLOATING WITH RESPECT TO UCP ELECTRICAL SERVICE GROUND AND ISOLATED FROM EACH OTHER. SPECIAL CONSIDERATION MUST BE GIVEN TO 4-20 mA SIGNALS. IF THE CURRENT SOURCE REGULATES CURRENT FLOW ON THE NEGATIVE LEAD, USE A SEPERATE POWER SUPPLY FOR EACH CHANNEL. IN SOME APPLICATIONS IT MAY BE NECESSARY TO INSTALL A LOOP ISOLATER IN EACH CHANNEL TO PREVENT LOOP INTERFERENCE.

Figure 16
(Concluded)

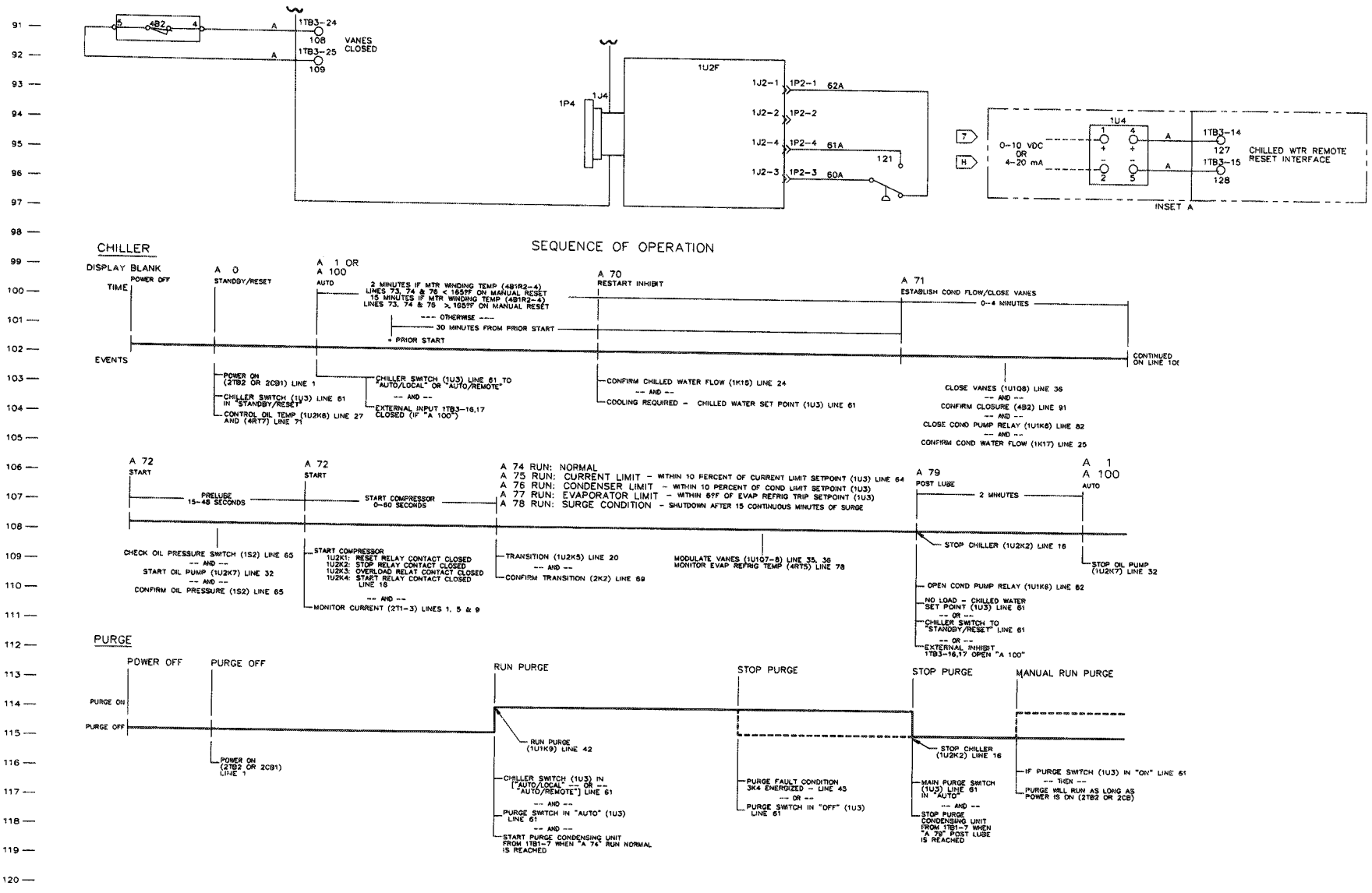

X39470572C

Figure 17
Available Starter Configurations

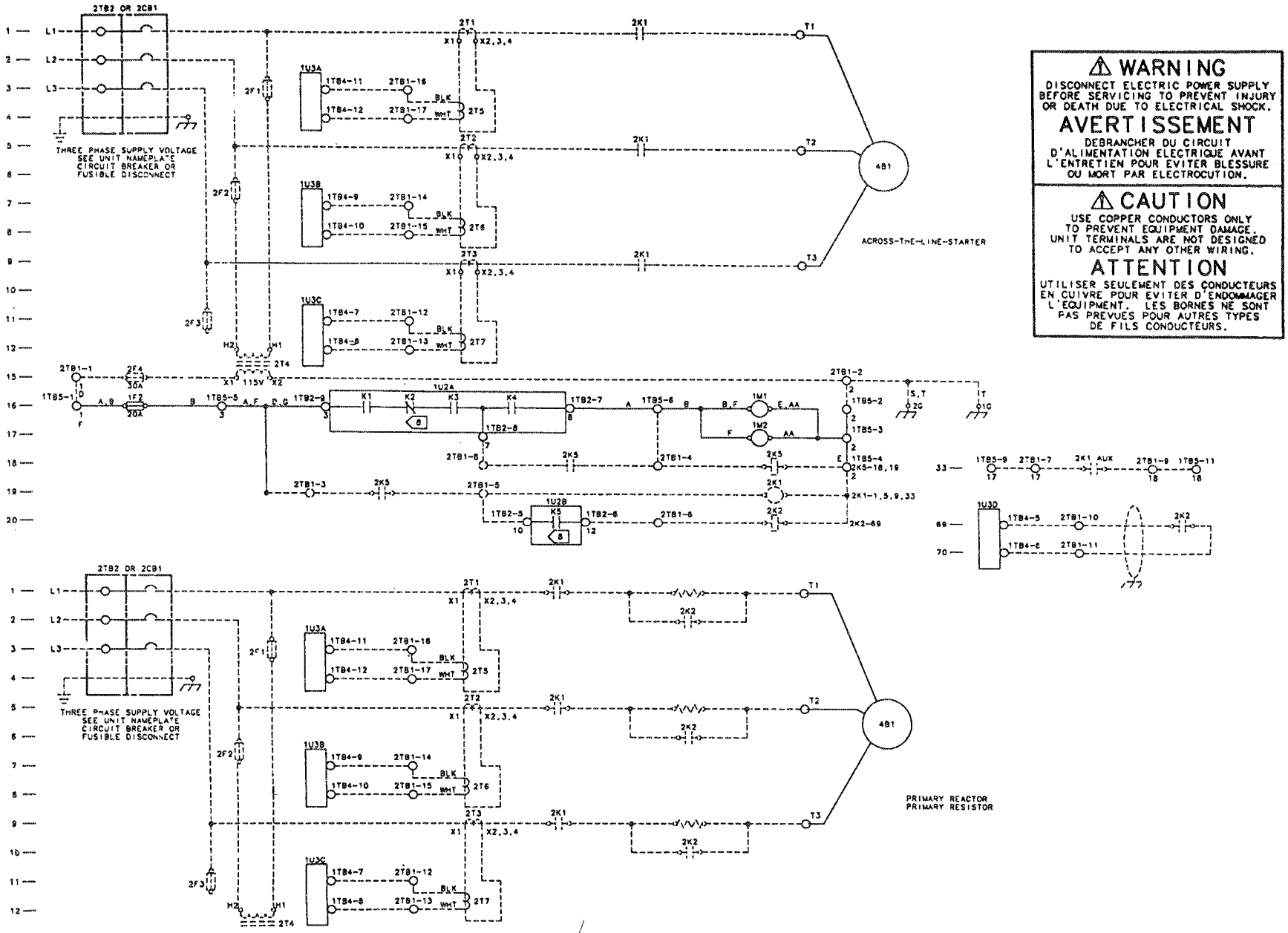

⚠ WARNING
DISCONNECT ELECTRIC POWER SUPPLY BEFORE SERVICING TO PREVENT INJURY OR DEATH DUE TO ELECTRICAL SHOCK.

AVERTISSEMENT
DEBRANCHER DU CIRCUIT D'ALIMENTATION ELECTRIQUE AVANT L'ENTRETIEN POUR EVITER BLESSURE OU MORT PAR ELECTROCUTION.

⚠ CAUTION
USE COPPER CONDUCTORS ONLY TO PREVENT EQUIPMENT DAMAGE. UNIT TERMINALS ARE NOT DESIGNED TO ACCEPT ANY OTHER WIRING.

ATTENTION
UTILISER SEULEMENT DES CONDUCTEURS EN CUIVRE POUR EVITER D'ENDOMMAGER L'EQUIPMENT. LES BORNES NE SONT PAS PREVUES POUR AUTRES TYPES DE FILS CONDUCTEURS.

Figure 17 (Concluded)

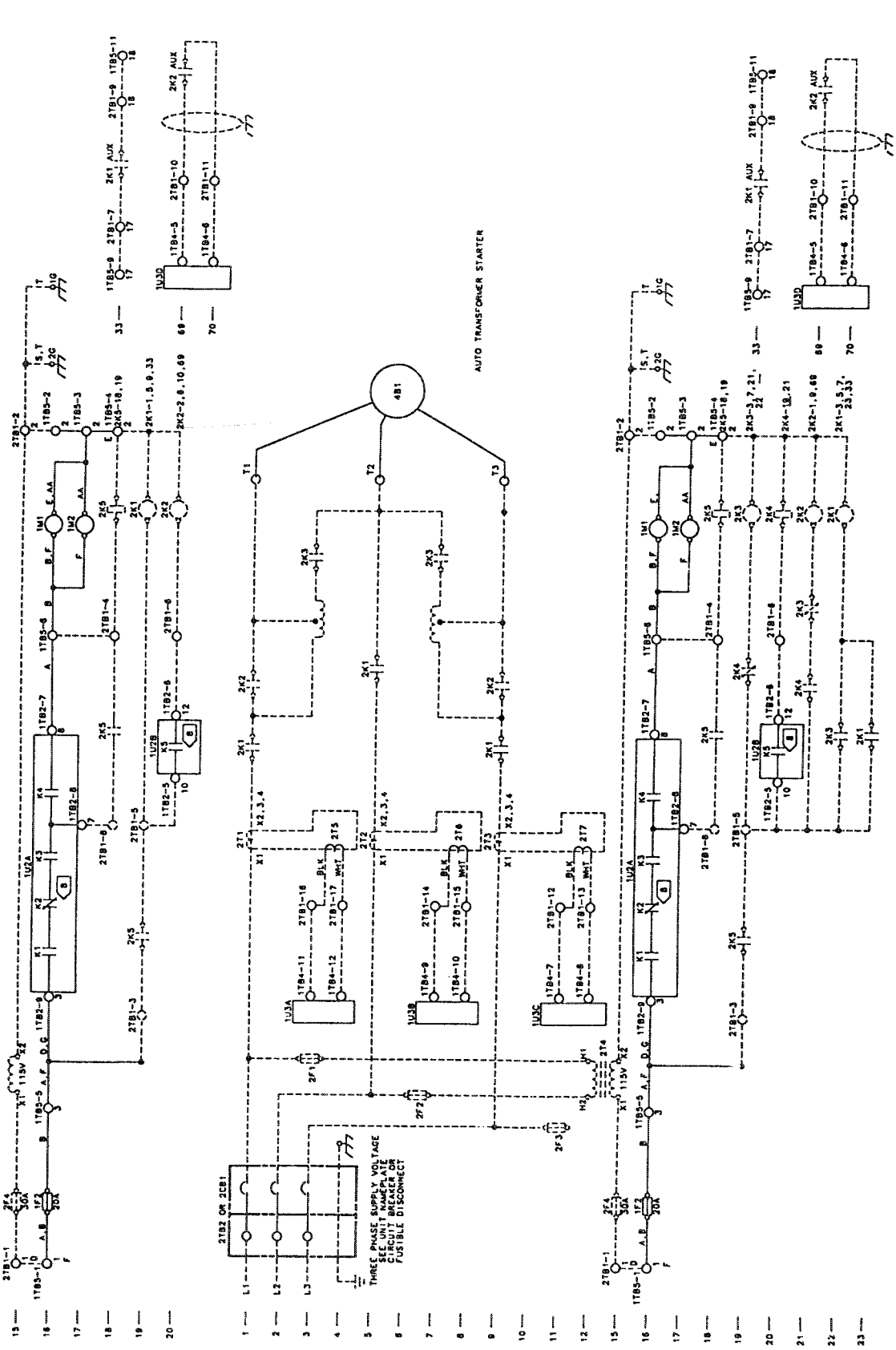

X39470503C

If cooling is required and all of the conditions required for start-up are met, micro module 1U3 sends a signal to power supply output module 1U2 to close the K4 contacts. This allows control voltage to flow to hour meter 1M1 and start counter 1M2; at the same time, a "start" signal is sent to pilot relay 2k5.

Notice that pilot relay 2K5 has 2 sets of normally-open contacts. The first set (Line 18; Figure 16) closes to lock the pilot relay into the control circuit around the K4 contacts.

Closure of the second set of 2K5 contacts (Line 19) allows control voltage to flow through the normally-closed auxiliary contacts of run contactor 2K2 (2M) and transition contactor 2K4 (1A) to the coil of shorting contactor 2K3 (S).

When shorting contactor 2K3 energizes, its normally-open, auxiliary contacts (Line 21) close; this allows control voltage to flow to the coil of start contactor 2K1.

With 2K1 now energized, its normally-open, auxiliary contacts (Line 22) close; this locks start contactor 2K1 into the control circuit around the auxiliary 2K3 contacts in Line 21 (Figure 16). Power is now supplied to the "wye" ("star") windings of compressor motor 4B1 through start contactors 2K1 and 2K3,

As the compressor accelerates, motor current draw decreases. When current draw drops to 85% of RLA, micro module 1U3 sends a signal to power supply output module 1U2 to close the normally-open contacts of compressor transition relay K5.

This energizes the coil of transition contactor 2K4 and causes its normally-closed set of auxiliary contacts (Line 19) to open.

With the circuit to shorting contactor 2K3 now open, 2K3 de-energizes and its normally-closed., auxiliary contacts (Line 22) reclose to allow control power to reach the coil of run contactor 2K2. Once the auxiliary set of normally-open 2K2 contacts in Line 23 closes, run contactor 2K2 is locked into the control circuit around the auxiliary, normally- open 2K3 and 2K1 contacts (Lines 21 and 22).

A normally-closed set of auxiliary 2K2 contacts also opens in Line 19 to interrupt control voltage to transition contactor 2K4.

Now that the "delta" motor windings are energized, compressor 4B1 is operating in its normal "run" mode; it will continue to do so until the "net state" of the k1, K2 and K3 contacts (Line 16) is open . Once this "open" condition occurs, voltage to pilot relay 2K5 is lost and its contacts reopen.

Any of the following events will result in a "net state" of "open" for contacts K1, K2 and K3, and stop compressor operation:

1. Adjusting the chiller switch to "Standby/Reset";

2. UCP detection of a latching or non-latching diagnostic condition; or,

3. Satisfaction of the cooling requirement (i.e., building load drops to the point where machine operation is no longer practical).

Determination of an actual compressor "stop" point based on satisfaction of cooling demand hinges on the start differential setpoint. the relationship between this setpoint and the UCP's "shutdown" criteria is illustrated in Table 5.

Table 5
CVHE/CVHF
Compressor "Stop" Points

Chiller Delta-T ° F	Rec. Start Differential Setpoint ° F	Chiller Shutdown Point (Degree below Setpoint) ° F
4 or less	2.0	2.0
5 or 6	3.0	2.0
7 or 8	4.0	2.0
9 or 10	5.0	2.0
11 or 12	6.0	2.0
13 or 14	7.0	2.0
15 or 16	8.0	2.0
17 or 18	9.0	2.0
19 or more	10.0	2.0

Note: "Chiller shutdown point" refers to actual leaving chilled water temperature with [illegible] the chilled water setpoing (CWS).

Fuse 1F3 Branch Circuit Oil Pump Circuit

120-Volt control power from control power transformer 2T4 flows through branch circuit fuse 1F3 and Terminal 1TB5-10 to a 6.2 amp fuse (1F1). Fuse 1F1 protects the oil pump motor (4B3) from overamperage conditions.

Current passing through fuse 1F1 reaches 2 normally-open, parallel sets of contacts those of oil pump relay K7 and start contactor 2K1. K7's are located on power supply output module 1U2, but contact status open or closed is governed by micro module 1U3.

Note: While the K7 contacts are automatically closed by 1U3 as a part of the start sequence, they can also be closed manually by adjusting the oil pump switch from "Auto" to "On".

With the K7 contacts closed, vent-line interval timer 1DL2 energizes and closes its set of normally-open contacts for 90 seconds. During this period, closure of vent-line solenoid valve 4L1 isolates the oil sump from the compressor to prevent loss of oil pressure. When the 90-second interval expires, 1DL2's contacts reopen and solenoid valve 4L1 de-energizes to reopen the oil sump vent line.

Closure of the K7 contacts also allows current to pass through the coil of oil pump starter relay 1K8 to the "run" windings of oil pump motor 4B3.

When motor 4B3 first starts, current draw is high; this causes current-sensing relay 1K8 to close its normally-open contacts (Line 31; Figure 16) and "pull in" of pump capacitor 1C1. With this circuit complete, current now flows to the "start" windings of the oil pump motor.

As the pump motor accelerates, its amp draw eventually falls below the "capacitor-enable" threshold of relay 1K8. Once this occurs, 1K8 reopens its normally-open contacts, and power is supplied only to the "run" windings of motor 4B3.

The normally-open, auxiliary 2K1 contacts (Line 33) that parallel those of oil pump relay K7 (Line 32) are located on start contactor 2K1. As soon as 2K1 energizes, these auxiliary contacts close. Notice that completion of this circuit assures that voltage is provided to the oil pump motor as long as the compressor motor is operating.

Oil pump operation ceases when both the K7 (Line 32 and auxiliary 2K1 (Line 33) contacts open.

Vane Actuator Circuit

Control power passing through branch circuit fuse 1F3 and Terminal 1TB5-10 not only energizes the oil pump circuit, but also provides power to the inlet vane actuator circuit. See Figure 16, notice that current enters van actuator motor 4B2 at Terminal 2. (Inset D of this schematic indicates typical, internal actuator wiring.)

Voltage entering the actuator at Terminal 2 passes through a thermal overload protection device to the "open" and "close" sets of actuator motor windings. A capacitor is connected to the opposite ends of these windings to provide the capacitance needed to start and run the vane actuator motor.

Current flowing from the "open" motor winding passes through an end switch and out of the actuator at Terminal M2, while current flowing through the "close" motor winding passes through another end switch and out of the actuator at Terminal M1.

CAUTION: To prevent actuator damage resulting from overheated motor windings, actuator motor end switches must be adjusted to open the motor circuits before the actuator drive arm reaches the end of its travel.

Control of the inlet vane actuator is achieved via 2 Triac switches (Q7, vanes open; Q8, vanes closed) located in relay output module 1U1. Functionally, Q7 and Q8 each operate like a simple set of contacts.

While the operation of both Triacs is automatically governed by micro module 1U3, manual control is possible by positioning the vane control switch at "Load", "Hold" or "Unload".

Note: Manual loading or holding does not take precedence over the current limit (A 75), condenser limit (A 76) or evaporator limit (A 77) modes of operation.

Purge System

Because some sections of the chiller's-refrigeration system operate at less-than-atmospheric pressure, the possibility exists that air and moisture may leak into the system. If allowed to accumulate, these non-condensibles become trapped in the condenser; this increases condensing pressure and compressor power requirements, and reduces the chiller's efficiency and cooling capacity.

The Trane Purifier Purge is the only purge system available for the CVHE/CVHF chiller. The purge is designed to remove non-condensible gasses and water from the refrigeration system. Purifier Purge unit operation, maintenance and troubleshooting is covered by a separate operation and maintenance manual (PRG-OM-4).

Control Options

Note: The typical wiring diagrams show in Figures 18 and 19 are provided only as a general reference. They may reflect the actual wiring of your unit. For specific electrical schematic and connection information, always refer to the wiring diagrams that shipped with the chiller.

Free Cooling

As described in Mechanical Operation, this control option adapts the basic chiller to function as a simple heat exchanger without controlling leaving water temperature.

Free cooling must be initiated manually by adjusting the free cooling switch (Figure 13) to the "On" position. When this is done (and the compressor is running), the UCP issues a "stop" signal and the chiller enters post-lube (operating code A 79).

Note: As soon as post-lube is initiated, the compressor motor and condenser water pump starters de-energize; oil pump operation continues until the 2-minute post-lube cycle expires.

Once post-lube is complete, operating code A 1 appears on the display and micro module 1U3 sends a "close" signal to inlet guide vane actuator 4B2. (Latching diagnostic b FA occurs if vane closure is not established within 3 minutes.)

If the vanes close within 3 minutes, a "start" signal is sent to the condenser water pump; condenser flow switch 5S3 must then close within 3 minutes, or the UCP will shut down chiller operation on latching diagnostic b dC.

See Figure 18 for typical schematics of the free cooling electrical circuits. When the inlet guide vanes are closed and condenser water flow is established, the UCP energizes 4 sets of K1 free cooling relay contacts (Lines 36 through 39) and a set of K2 free cooling relay contacts (Line 90) in relay output module 1U1.

Note: The normally-open K2 contacts (Line 90) provide the owner with the electrical access needed to control auxiliary equipment during the free cooling cycle (e.g., water flow through the cooling tower during the free cooling mode). Actual use of the K2 contacts may vary with any given chiller application.

Two sets of normally closed K1 contacts (Lines 36 and 38) now open while the 2 normally open sets of K1 contacts (Lines 37 and 39) close. This completes the "open" circuits of the free cooling liquid (4B12) and gas (4B23) -line valve actuators. Remember that both valves must open within 3 minutes, or unit operation is locked out on latching diagnostic b F9.

Operating A 9 (free cooling) appears on the display when the UCP verifies that the free cooling valves are open.

Note: UCP control logic prevents the compressor from starting when the chiller is operating in the free cooling mode. Manual control of the inlet guide vanes (via the vane control switch) is also disabled at this time.

Once the chiller functioning in the free cooling mode, powered e cooling switch is adjusted to "Off" and the UCP verifies that the free cooling valves are closed.

Hot Gas Bypass

The hot gas bypass (HGBP) control option is designed to minimize machine cycling by allowing the chiller to operate stably under minimum load conditions. In these situations, the inlet guide vanes are "locked" at a preset minimum position, and unit capacity is governed by the HGBP valve actuator.

Control circuitry (see Figure 19) is designed to allow both the inlet guide vanes and the HGBP valve to close for unit shutdown.

Four control components are associated with the hot gas bypass option:

HGBP Relay 1K15. Located in the UCP695 panel (Figure 13), this relay enables the HGBP valve and inlet guide vanes to close at unit shutdown.

HGBP Transfer Switch 4S4. This single-pole/double-throw (SPDT) limit switch is mounted on the actuator shaft (near the first-stage inlet guide vane linkage), and operates when the vanes pass through a particular minimum setting. It is field adjustable for optimum performance.

HGBP Valve Switch 4B5. Mounted on the hot gas bypass valve actuator, this SPDT limit switch operates when the valve just begins to open. Notice that the "close" limit switch mounted on the HGBP valve actuator (4B5) must be set to operate just after damper end switch 4S4 operates.

Discharge Temperature Switch 4S5. This device is designed to shut down the unit on latching diagnostic b F1 if the discharge temperature exceeds 210 F; (99 C) this prevents the chiller from running at extremely low loads for extended periods of time.

As soon as the power supply disconnect switch or circuit breaker 2CB1 is closed, 120-volt control power is supplied to the HGBP circuit through branch circuit fuse 1F3. Notice that this circuit includes both vane actuator motor 4B2 and HGBP valve 4B5.

Before the compressor "start" signal is sent, micro module 1U3 issues a "vane close" signal by closing Triac switch 1U1Q8. This, in turn, causes both the inlet vane (4B2) and HGBP valve (4B5) actuators to drive closed via the normally closed contacts of HGBP relay 1K15.

Once the inlet guide vanes are closed and the remainder of the start sequence is complete, the auxiliary contacts of start contactor 2K1 (Line 32) close and HGBP relay 1K15 energizes.

Machine start-up is usually followed by a series of "vanes open" signals issued by the UCP through successive closures of Triac switch 1U1Q7. (See "Fuse 1F3 Branch Circuit" in Electrical Sequence of Operation for an explanation of vane actuator operation.) Notice that the "vanes open" signal passes through HGBP valve motor end switch 4B45 (Line 36); this end switch remains closed as long as the HGBP valve is closed.

Continued loading eventually causes Transfer Switch 4S4 to change position so that it closes between vane actuator 4B2's M1 Terminal (Line 34) and Terminal 1TB7-3 (Line 37). Vane actuator 4B2 is now connected "directly" to Triac switches 1U1Q7 and 1UQ8 through 4S4; therefore, any additional loading or unloading dictated by the UCP is performed by 4B2 acting independently of HGBP valve actuator 4B5.

As the unit unloads and the inlet guide vanes again reach the preset minimum position, transfer switch 4S4 closes between Terminal 2 on 4B5 and Terminal 1TB7-3. This completes the HGBP valve actuator's "open" circuit so that any unload signals from the UCP will now drive the HGBP valve open. As soon as this occurs and the HGBP valve opens 4B5's end switch (Line 36) reverses its position and completes the "close" circuit of the HGBP valve actuator.

See Figure 18. Any load signals generated by the UCP must now pass through the "close" circuit of valve actuator 4B5 (Terminals 1-to-3) and through 4B5's end switch (Line 36 to "vanes open" switch 1U1Q7. In this manner, unit capacity is controlled by the HGBP valve actuator, with the inlet guide vanes held at their minimum position.

Once the UCP determines that additional cooling capacity is required, it issues a load signal that causes valve actuator 4B5 to drive the HGBP valve closed.

When the valve reaches the full-closed position, 4B5's end switch (Line 36) returns to its original position and inlet guide vane control is restored to valve actuator 4B2.

If the inlet guide vanes do not open past the minimum position (at start-up) before an unload signal is sent, the unit will use the HGBP valve actuator to control vane movement.

Note: Contact a qualified service technician for proper adjustment of the end switches on HGBP valve actuator 485 and HGBP transfer switch 4S4.

Relay Package

On modules prior to 1991 this UCP control option consists of the addition of 2 relays built into relay output module 1U1; alarm relay K4 and "head-relief request" relay K3. After February 1991 all 1U1 modules have the additional relays and are not an option.

Alarm Relay 1U1K4 activates whenever the UCP detects a latching diagnostic condition (i.e., one that requires manual reset), and provides the electrical access needed for field-installation of a customer-supplied alarm.

See Lines 84 through 87 in Figure 16. Notice that the customer-provided alarm relay (5K3) can either be field-connected between Terminals 1TB1-9 and 1TB1-10 for normally open contacts, or between Terminals 1TB1-8 and 1TB1-10 for normally closed contacts.

'Head-relief" request relay 1U1K3 is designed to be used in conjunction with the UCP's standard surge protection feature, as well as with the condenser limit control option. Its' normally open relay contacts (Figure 16, Line 88) are field-accessible at Terminals 1TB1-11 and -12, and can be used to control or signal for a reduction in entering condenser water temperature.

Designed to prevent high refrigerant pressure trip-outs during critical periods of chiller operation, this UCP option consists of: (1) the manually adjustable condenser limit potentionmeter on micro module 1U3; (2) pressure transducer 1R1; and (3) the associated inter-connecting piping and wiring.

The UCP monitors the condenser pressure registered by pressure transducer 1R1, and then com-press this value to the manually adjusted setting of the condenser limit potentiometer.

Based on these inputs, the UCP modulates inlet guide vane posi-tion accordingly to keep the chiller on-line as long as possible (as the high pressure safety limit is approached).

Note: If the optional relay package option is installed, the head relief request relay may also energize to signal further corrective action (e.g., lowering entering condenser water temperature).

Keep in mind that the UCP's condenser limit control option supplements the protection already provided by condenser high pressure cutout switch 1S1.

Bearing Temperature Sensors (4RT8, 4RT9)

When this UCP control option is specified, temperature sensors 4RT8 and 4RT9 are factory-installed in the oil return lines of the inboard and outboard compressor motor bearings.

If the temperature registered by either of these sensors reaches or exceeds 180 F (83 C), the UCP shuts down chiller operation on latching diagnostic B EA (high bearing temperature at "Sensor # 1"), or b EA (high bearing tem-perature at "Sensor # 1"), or b EB (high bearing temperature at "Sensor # 2".

Note: 4RT8 is designated as "Sensor # 1". Its sensing element is installed in a well in the inboard bearing oil return line, and the leads are connected to Terminals 1TB4-19 and -20 on micro module 1U3. Designated as "Sensor # 2," 4RT9's sensing element is installed in a well in the oil return line of the outboard bearing; the sensor leads are connected to Terminals 1TB4-21 and -22. (Alternatively, these sensors may be epoxied to the underside of the oil return lines.)

Sensor Options

Along with the factory-installed bearing temperature sensors just described, the following Sensors are available to add at any time.

Entering Evaporator Water (4RT2). Sensor 4RT2 is installed in the water piping entering the evaporator, and is connected between Terminals 1TB3-3 and 1TB3-4 on micro module 1U3.

Entering (4RT3) and Leaving (4RT4) Condenser Water. Sensor 4RT3 is connected between Terminals 1TB3-5 and -6, and registers the temperature of the water entering the condenser. Field-installed in the water piping leaving the condenser, sensor 4RT4 is connected to Terminals 1TB3-7 and -8.

Condenser Refrigerant (4RT6). Sensor 4RT6's sensing element is epoxied to the refrigerant line located between the condenser and condenser/economizer flange, and the sensor leads must be field-connected to Terminals 1TB3-14 and 1TB3-15 on micro module 1U3. Required if controlled by SCP. Read-out is only enabled at a Tracer.

Figure 18
Typical Electrical Schematic
60 Hz. CVHE/CVHF w/Free Cooling and
Unit Mounted Starter

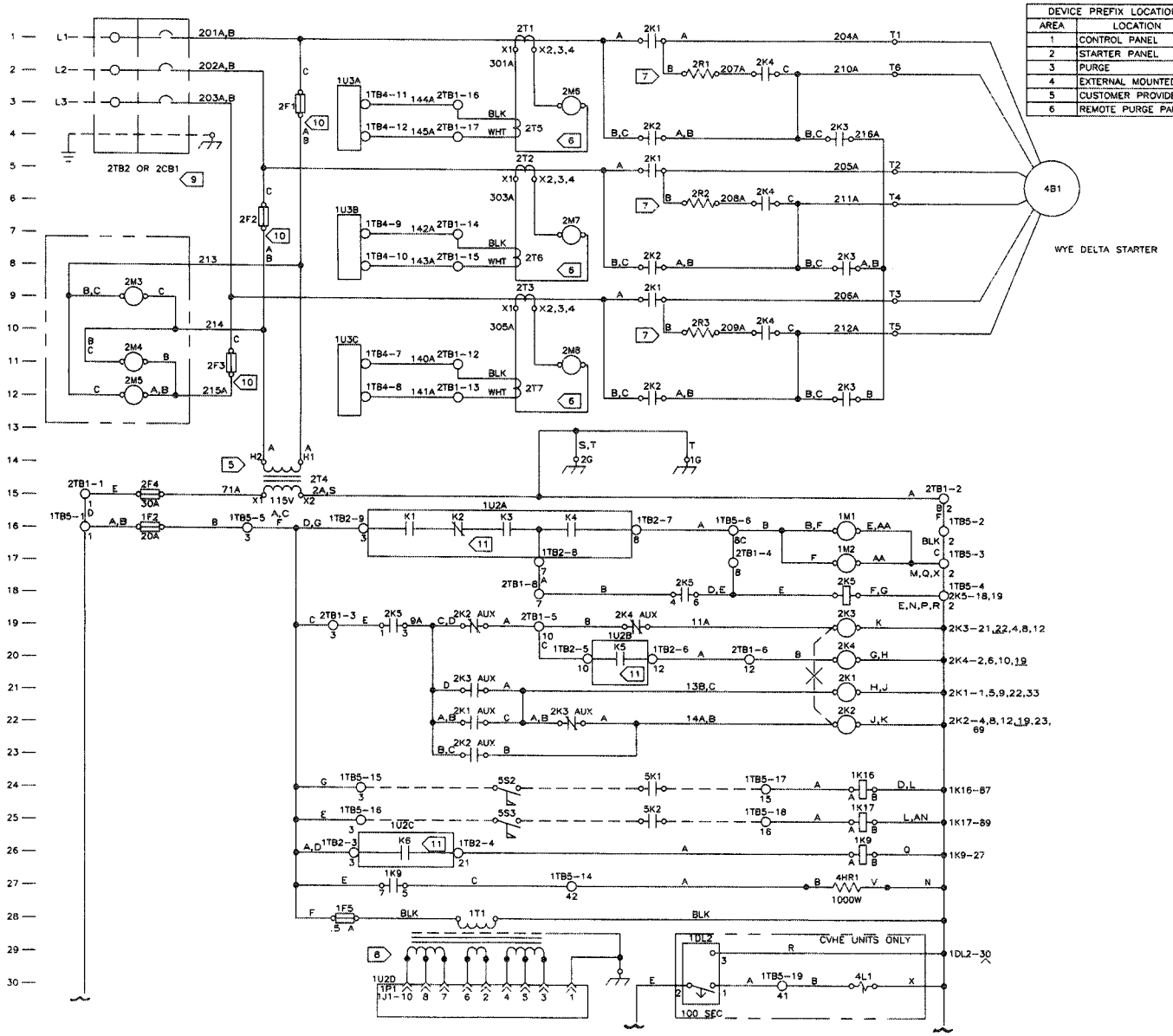

DEVICE PREFIX LOCATION CODE	
AREA	LOCATION
1	CONTROL PANEL
2	STARTER PANEL
3	PURGE
4	EXTERNAL MOUNTED
5	CUSTOMER PROVIDED
6	REMOTE PURGE PANEL

LEGEND		
DEVICE DESIGNATION	DESCRIPTION	LINE NUMBER
1C1	CAPACITOR, OIL PUMP	32
1DL2	VENT LINE INTERV. TIMER	29
1F1	FUSE, OIL PUMP	33
1F2-5	BRANCH CIRCUIT FUSE	16,35, 28,42
1J1-4/1P1-4	POST HEADER POWER SUPPLY	30,85,94
1K8	OIL PUMP STARTER RELAY	33
1K9	OIL TANK HTR RELAY	26
1K16	CWD WTR PUMP RELAY	24
1K17	COND WTR PUMP RELAY	25
1K18	FREE COOLING RELAY	40
1M1	HOUR METER	16
1M2	START METER	17
1R1	RESISTOR PRESS TRANSDUCER	75
1S1	COND. HIGH PRESS SWITCH	95
1S2	OIL PRESS SWITCH	65
1T1	POWER SUPPLY TRANSFORMER	28
1TB1	TERM BLOCK REL OUTPUT	
1TB2	TERM BLOCK POWER SPLY	
1TB3	TERM BLOCK MICRO-MOD INPUT	
1TB4	TERM BLOCK MICRO-MOD INPUT	
1TB5	TERM BLOCK CONTROL PANEL	
1TB6	TERM BLOCK MICRO-MOD INPUT	65,66
1U1A-D	RELAY OUTPUT MODULE	SHEET 2
1U1DK1	FREE COOLING OUTPUT RELAY	41
1U1K3	HEAD RELIEF RELAY	88
1U1K4	ALARM RELAY	85
1U1K6	COND WATER PUMP RELAY	82
1U1Q7	VANES OPEN (TRIAC)	35
1U1Q8	VANES CLOSED (TRIAC)	36
1U2A-F	POWER SUPPLY OUTPUT MOD	SHEET 2
1U2K1	RESET RELAY	16
1U2K2	STOP RELAY	16
1U2K3	OVERLOAD RELAY	16
1U2K4	COMPR.START RELAY	16
1U2K5	COMPR.TRANSITION RELAY	20
1U2K6	OIL HEATER RELAY	26
1U2K7	OIL PUMP RELAY	32
1U3A-D	MICRO MODULE	SHEET 2
1U4	BAS CHILLED WTR RESET	94
2CB1	STARTER CIRCUIT BREAKER	1,2,3
2F1,2,3	PRIMARY STARTER FUSE	3,6,11
2K1	START CONTACTOR	21
2K2	RUN CONTACTOR	22
2K3	SHORTING CONTACTOR	19
2K4	TRANSITION CONTACTOR	20
2K5	PILOT RELAY	18
2M3,4,5	VOLT METER	9,11,12
2M6,7,8	AMPMETER	56,58,60
2R1-9	TRANSITION RESISTOR	2,6,10
2R10,11	SURGE ARRESTER	1,10
2T1-3	CURRENT TRANSFORMERS	1,5,9
2T4	CONTROL POWER TRANSFORMER	14
2T5,6,7	CURRENT TRANSFORMERS	4,7,11
2TB1	CONTROL TERMINAL BLOCK	
2TB2	LINE TERMINAL BLOCK	1,2,3
3B5	CONDENSING UNIT	52
3B6	PUMPOUT COMPRESSOR	49
(6)3DL2	TIME DELAY RELAY	44
(6)3DS1	CONDENSER RUN LIGHT	53
(6)3DS2	FAULT INDICATION LIGHT	46
(6)3DS3	BYPASS LIGHT	47
(6)3K4	CONTROL RELAYS	45
3L1 & 3	SOLENOID VALVES	50,51
(6)3M1	MINUTE METER	48
(6)3S4	SERVICE SWITCH	51
(6)3S5	BYPASS SWITCH	45
(6)3S6	TIMER RESET SWITCH	44

Figure 18
(Continued from previous page)

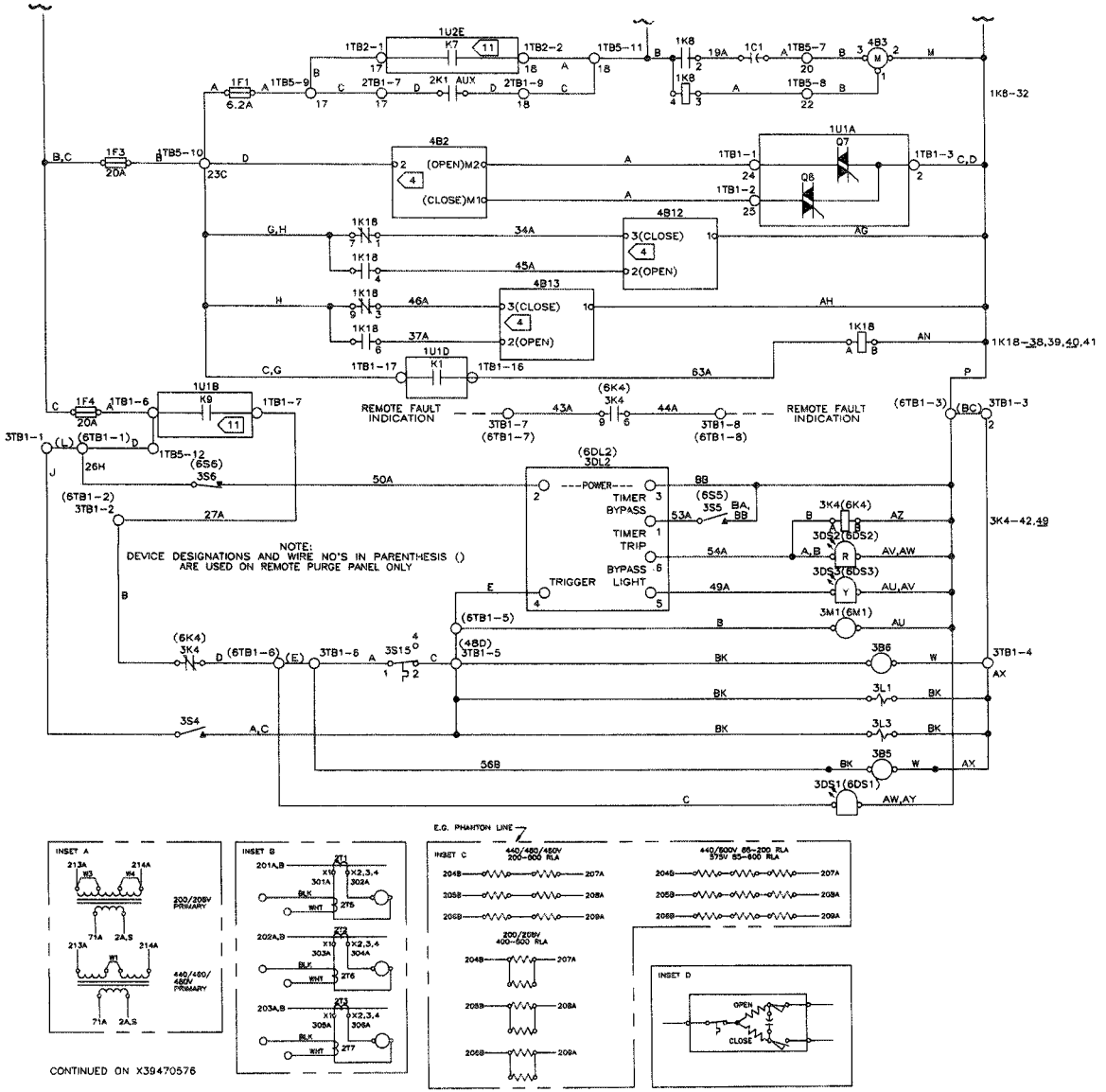

3S15	TEMPERATURE SWITCH	49
3TB1	PURGE TERMINAL BLOCK	
(6TB1)	(REMOTE PANEL TERM. BLOCK)	
4B1	COMPRESSOR MOTOR	5
4B1R2,3,4	MOTOR WINDING TEMP SENSOR	69,71,73
4B2	VANE ACTUATOR MOTOR	35
4B3	OIL PUMP MOTOR	32
4B12	LIQUID LINE VALVE	37
4B13	GAS LINE VALVE	39
4HR1	OIL TANK HEATER	27
4L1	VENT LINE SOLENOID	30
4RT1-9	THERMISTOR	69-80
5DS1	ALARM INDICATION	85
5K1	CHWD WATER PUMP CONT. AUX	N/A
5K2	COND WATER PUMP CONT. AUX	82
5K3	ALARM RELAY	84
5K4	HEAD RELIEF REQUEST CONT.	88
5S2	CHWD WATER FLOW SWITCH	24
5S3	COND WATER FLOW SWITCH	25
5S4	INTERLOCK SWITCH	87

NOTES:
1. SOLID LINES INDICATE TRANE WIRING. DASHED LINES INDICATE FIELD WIRING. PHANTOM LINES INDICATE OPTIONAL FEATURES OR ALTERNATE CIRCUITRY.
2. UNLESS OTHERWISE NOTED, ALL SWITCHES ARE SHOWN AT 25?C (77?F), AT ATMOSPHERIC PRESSURE, AT 50% RELATIVE HUMIDITY, WITH ALL UTILITIES TURNED OFF AND AFTER A NORMAL SHUTDOWN HAS OCCURED.
3. NUMBERS ALONG THE RIGHT SIDE OF THE SCHEMATIC DESIGNATE THE LOCATION OF THE CONTACTS BY LINE NUMBER. AN UNDERLINED NUMBER INDICATES A NORMALLY CLOSED CONTACT. AN OPEN ARROWHEAD BELOW THE LINE NUMBER POINTING UPWARD INDICATES A TIMED CONTACT WHICH BEGINS TIMING WHEN ENERGIZED.

4. SEE INSET D FOR TYPICAL INTERNAL WIRING OF ACTUATOR.
5. SEE INSET A FOR OTHER VOLTAGES. 575/600 VOLT PRIMARY SHOWN.
6. SEE INSET B FOR OPTIONAL AMPMETERS.
7. SEE INSET C FOR OTHER VOLTAGES. RESISTORS SHOWN FOR 200/208V AND 200-400 RLA.
8. SEE SERVICE MANUAL FOR INDIVIDUAL SECONDARY VOLTAGES.
9. THREE PHASE POWER SUPPLY VOLTAGE SEE UNIT NAMEPLATE.
10. 20A FOR 208V; 10A FOR 440/460/480V; OR 8A FOR 575/600V.
11. RELAY COILS NOT SHOWN. CONTACTS ARE CONTROLLED BY THE LOGIC OF THE MICRO-MODULE (1U3). SEE SEQUENCE OF OPERATION LINES 102 - 115 NEXT PAGE.

⚠ WARNING

DISCONNECT ELECTRIC POWER SUPPLY BEFORE SERVICING TO PREVENT INJURY OR DEATH DUE TO ELECTRICAL SHOCK.

AVERTISSEMENT

DEBRANCHER DU CIRCUIT D'ALIMENTATION ELECTRIQUE AVANT L'ENTRETIEN POUR EVITER BLESSURE OU MORT PAR ELECTROCUTION.

⚠ CAUTION

USE COPPER CONDUCTORS ONLY TO PREVENT EQUIPMENT DAMAGE. UNIT TERMINALS ARE NOT DESIGNED TO ACCEPT ANY OTHER WIRING.

ATTENTION

UTILISER SEULEMENT DES CONDUCTEURS EN CUIVRE POUR EVITER D'ENDOMMAGER L'EQUIPMENT. LES BORNES NE SONT PAS PREVUES POUR AUTRES TYPES DE FILS CONDUCTEURS.

X39470575B

Figure 18
(Continued)

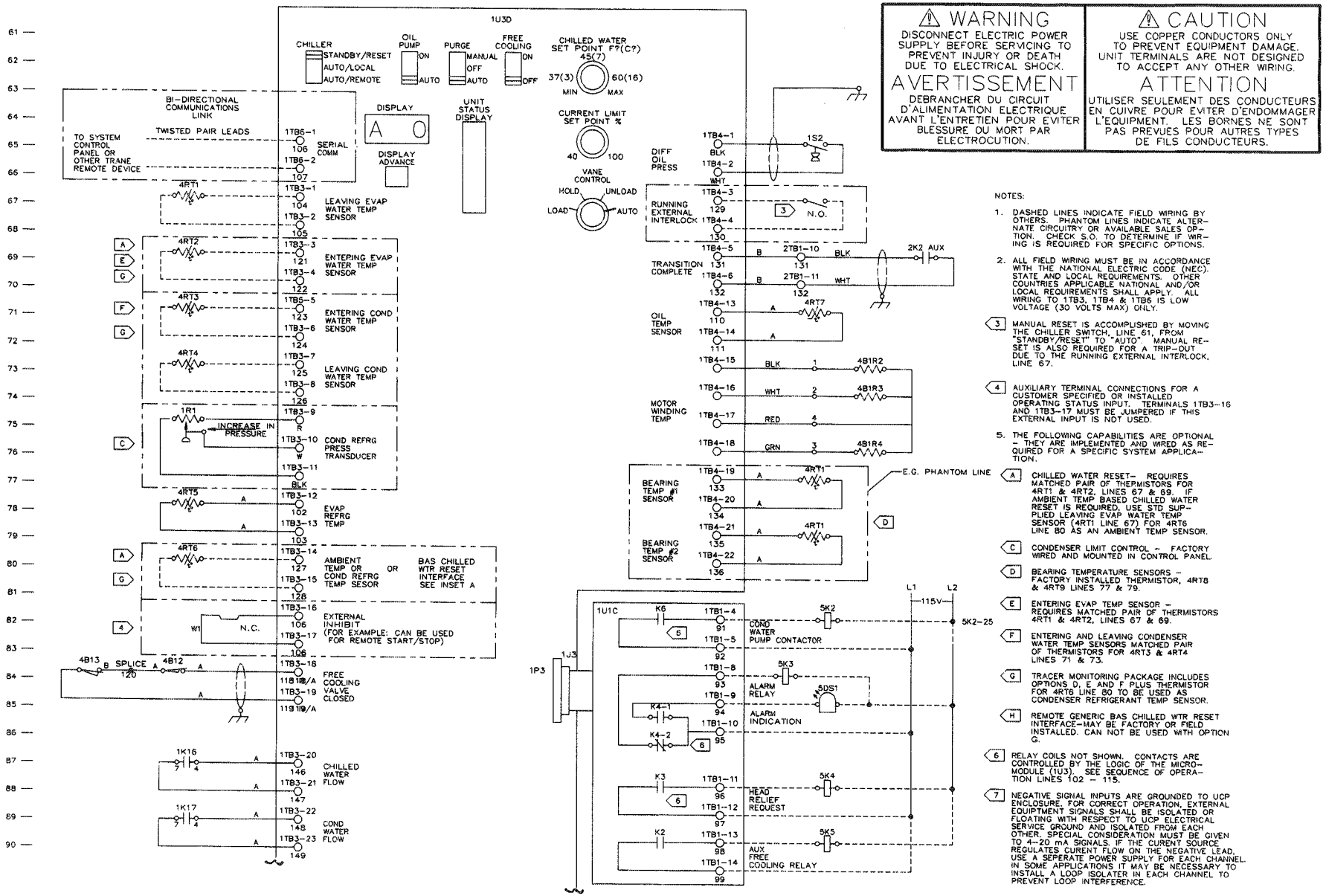

Figure 18
(Concluded)

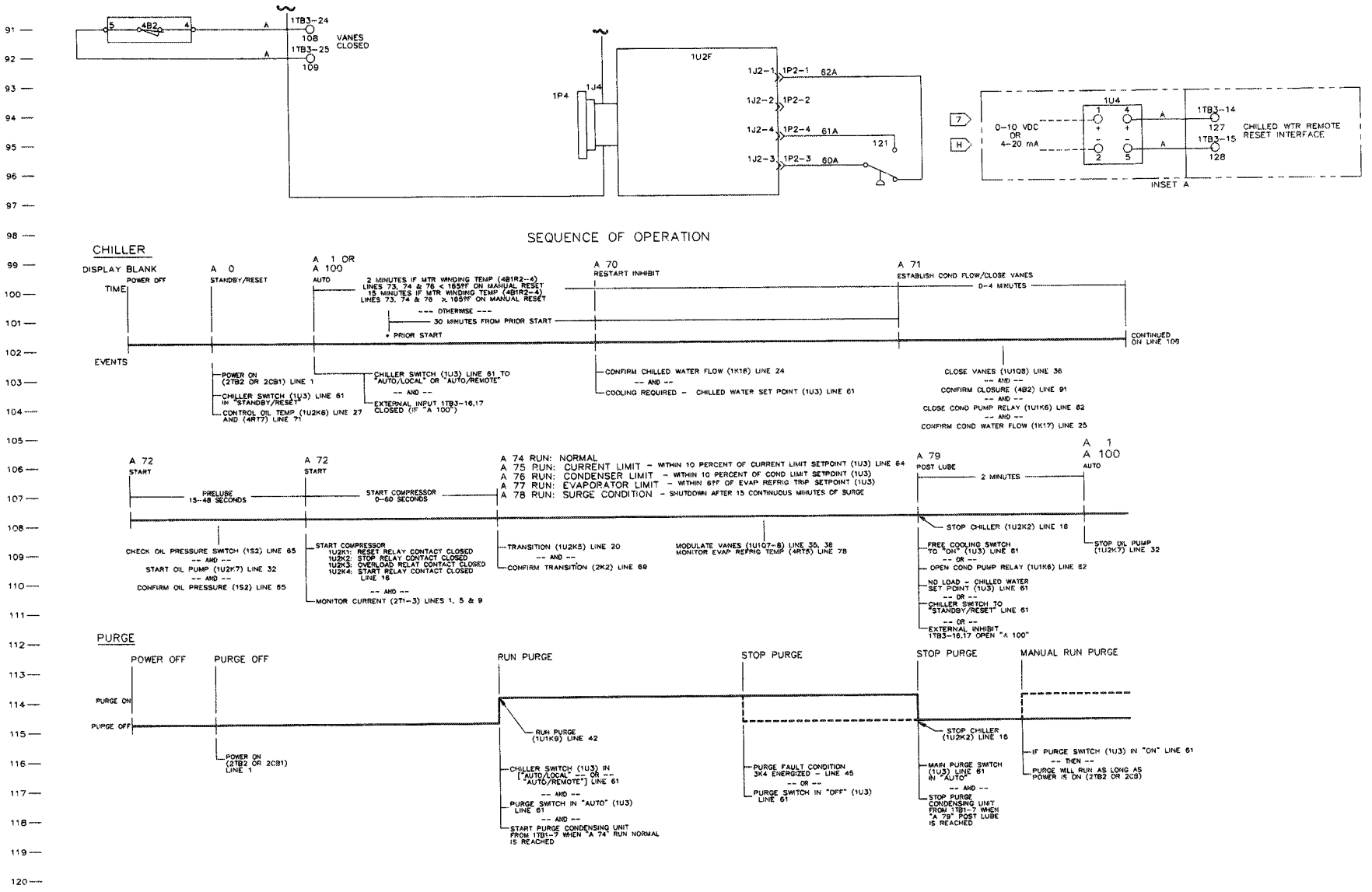

X39470576D

Figure 19
Typical Electrical Schematic for 60 Hz CVHE/CVHF w/Hot Gas Bypass and Unit-Mounted Starter

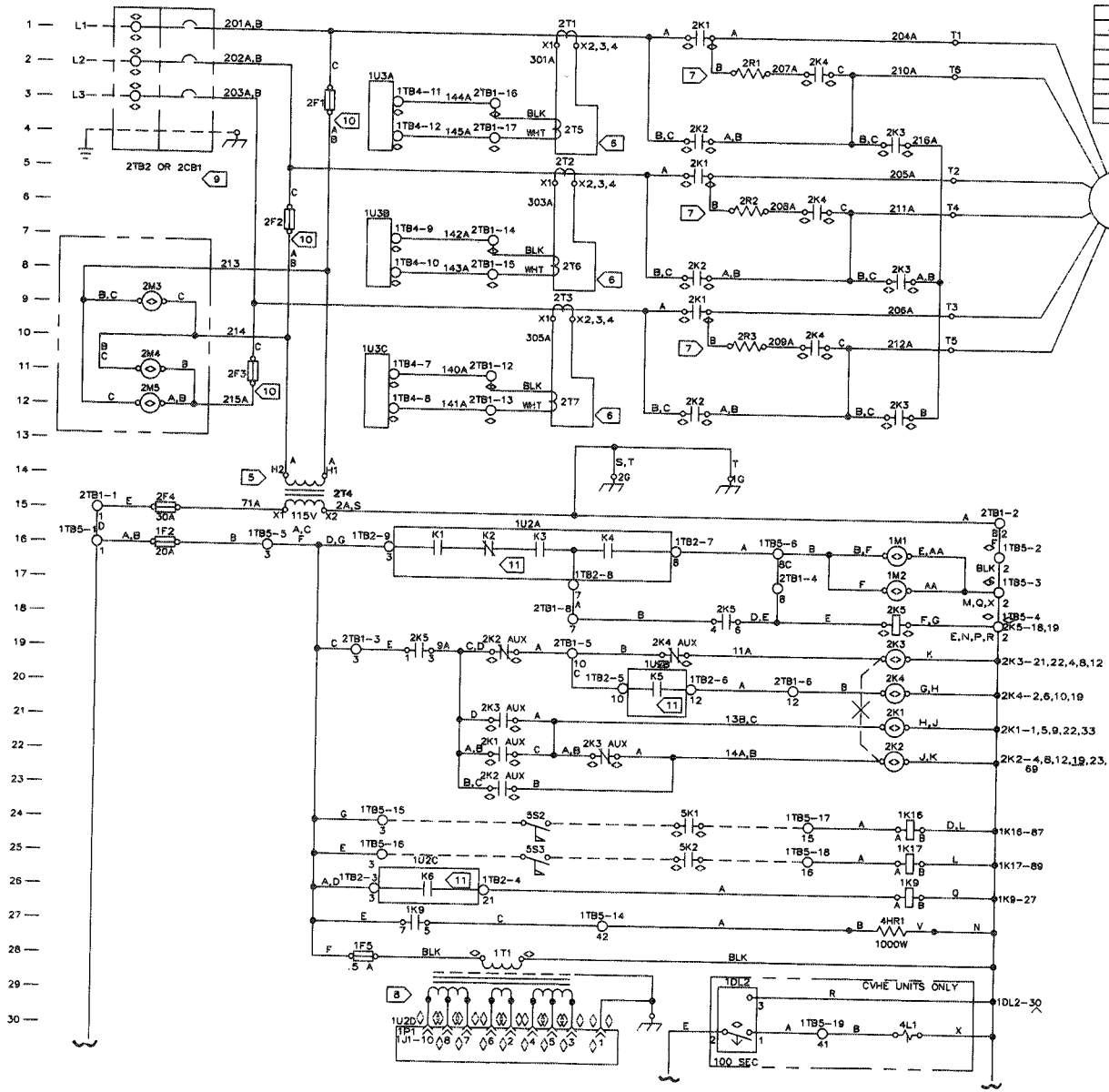

DEVICE PREFIX LOCATION CODE	
AREA	LOCATION
1	CONTROL PANEL
2	STARTER PANEL
3	PURGE
4	EXTERNAL MOUNTED
5	CUSTOMER PROVIDED
6	REMOTE PURGE PANEL

LEGEND		
DEVICE DESIGNATION	DESCRIPTION	LINE NUMBER
1C1	CAPACITOR, OIL PUMP	32
1DL2	VENT LINE INTERV. TIMER	29
1F1	FUSE, OIL PUMP	33
1F2-5	BRANCH CIRCUIT FUSE	16,35, 28,42
1J1-4/1P1-4	POST HEADER POWER SUPPLY	30,85,94
1K8	OIL PUMP STARTER RELAY	33
1K9	OIL TANK HTR RELAY	26
1K15	CONTROL RELAY H.G.B.P.	34
1K16	CWD WTR PUMP RELAY	24
1K17	COND WTR PUMP RELAY	25
1M1	HOUR METER	16
1M2	START METER	17
1R1	RESISTOR PRESS TRANSDUCER	75
1S1	COND. HIGH PRESS SWITCH	95
1S2	OIL PRESS SWITCH	65
1T1	POWER SUPPLY TRANSFORMER	28
1TB1	TERM BLOCK REL OUTPUT	
1TB2	TERM BLOCK POWER SPLY	
1TB3	TERM BLOCK MICRO-MOD INPUT	
1TB4	TERM BLOCK MICRO-MOD INPUT	
1TB5	TERM BLOCK CONTROL PANEL	
1TB6	TERM BLOCK MICRO-MOD INPUT	55,66
1TB7	TERM BLOCK H.G.P.B.	◇
1U1A-C	RELAY OUTPUT MODULE	SHEET 2
1U1K3	HEAD RELIEF RELAY	88
1U1K4	ALARM RELAY	85
1U1K5	COND WATER PUMP RELAY	82
1U1Q7	VANES OPEN (TRIAC)	35
1U1Q8	VANES CLOSED (TRIAC)	36
1U2A-F	POWER SUPPLY OUTPUT MOD	SHEET 2
1U2K1	RESET RELAY	16
1U2K2	STOP RELAY	16
1U2K3	OVERLOAD RELAY	16
1U2K4	COMPR.START RELAY	16
1U2K5	COMPR.TRANSITION RELAY	20
1U2K6	OIL HEATER RELAY	26
1U2K7	OIL PUMP RELAY	32
1U3A-D	MICRO MODULE	SHEET 2
1U4	BAS CHILLED WTR RESET	94
2CB1	STARTER CIRCUIT BREAKER	1,2,3
2F1,2,3	PRIMARY STARTER FUSE	3,6,11
2K1	START CONTACTOR	21
2K2	RUN CONTACTOR	22
2K3	SHORTING CONTACTOR	19
2K4	TRANSITION CONTACTOR	20
2K5	PILOT RELAY	18
2M3,4,5	VOLT METER	9,11,12
2M6,7,8	AMPMETER	56,58,60
2R1-9	TRANSITION RESISTOR	2,6,10
2T1-3	CURRENT TRANSFORMERS	1,5,9
2T4	CONTROL POWER TRANSFORMER	14
2T5,6,7	CURRENT TRANSFORMERS	4,7,11
2TB1	CONTROL TERMINAL BLOCK	
2TB2	LINE TERMINAL BLOCK	1,2,3
3B5	CONDENSING UNIT	52
3B6	PUMPOUT COMPRESSOR	49
(6)3DL2	TIME DELAY RELAY	44
(6)3DS1	CONDENSER RUN LIGHT	53
(6)3DS2	FAULT INDICATION LIGHT	46
(6)3DS3	BYPASS LIGHT	47
(6)3K4	CONTROL RELAYS	45
3L1 & 3	SOLENOID VALVES	50,51
(6)3M1	MINUTE METER	48
(6)3S4	SERVICE SWITCH	51
(6)3S5	BYPASS SWITCH	45
(6)3S6	TIMER RESET SWITCH	44
3S15	TEMPERATURE SWITCH	49

Figure 19
(Continued from previous page)

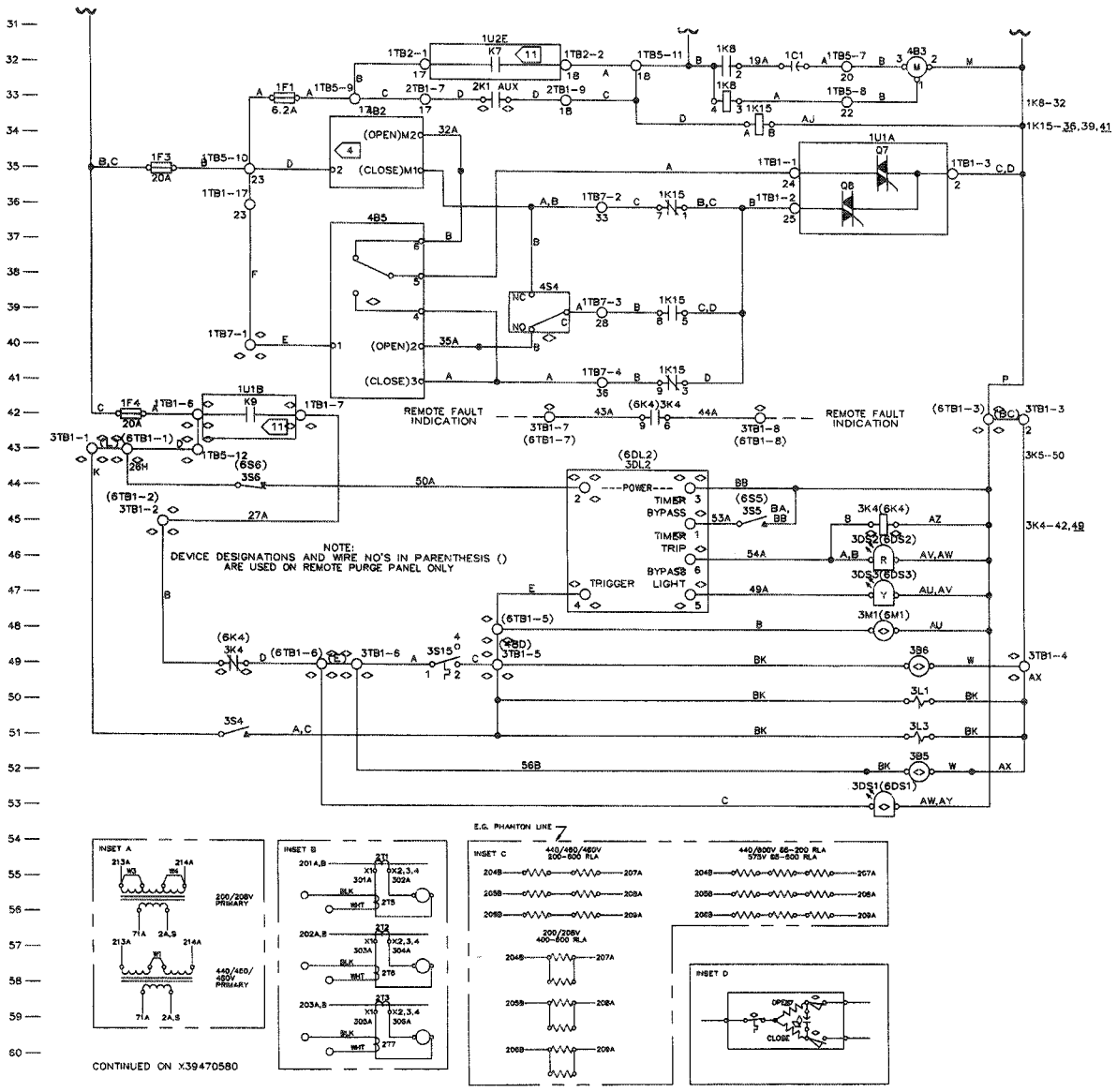

3TB1	PURGE TERMINAL BLOCK	
(6TB1)	(REMOTE PANEL TERM. BLOCK)	
4B1	COMPRESSOR MOTOR	5
4B1R2,3,4	MOTOR WINDING TEMP SENSOR	69,71,73
4B2	VANE ACTUATOR MOTOR	35
4B3	OIL PUMP MOTOR	32
4B5	HOT GAS BY-PASS VALVE	37
4HR1	OIL TANK HEATER	27
4L1	VENT LINE SOLENOID	30
4RT1-9	THERMISTOR	69-80
4S4	HGBP TRANSFER SWITCH	39
4S5	DISCHARGE TEMP. SWITCH	67
5DS1	ALARM INDICATION	85
5K1	CHWD WATER PUMP CONT. AUX	N/A
5K2	COND WATER PUMP CONT. AUX	82
5K3	ALARM RELAY	84
5K4	HEAD RELIEF REQUEST CONT.	88
5S2	CHWD WATER FLOW SWITCH	24
5S3	COND WATER FLOW SWITCH	25
5S4	INTERLOCK SWITCH	67

NOTES:

1. SOLID LINES INDICATE TRANE WIRING. DASHED LINES INDICATE FIELD WIRING. PHANTOM LINES INDICATE OPTIONAL FEATURES OR ALTERNATE CIRCUITRY.
2. UNLESS OTHERWISE NOTED, ALL SWITCHES ARE SHOWN AT 25°C (77°F), AT ATMOSPHERIC PRESSURE, AT 50% RELATIVE HUMIDITY, WITH ALL UTILITIES TURNED OFF AND AFTER A NORMAL SHUTDOWN HAS OCCURED.
3. NUMBERS ALONG THE RIGHT SIDE OF THE SCHEMATIC DESIGNATE THE LOCATION OF THE CONTACTS BY LINE NUMBER. AN UNDERLINED NUMBER INDICATES A NORMALLY CLOSED CONTACT. AN OPEN ARROWHEAD BELOW THE LINE NUMBER POINTING UPWARD INDICATES A TIMED CONTACT WHICH BEGINS TIMING WHEN ENERGIZED.

4. SEE INSET D FOR TYPICAL INTERNAL WIRING OF ACTUATOR.
5. SEE INSET A FOR OTHER VOLTAGES. 575/600 VOLT PRIMARY SHOWN.
6. SEE INSET B FOR OPTIONAL AMPMETERS.
7. SEE INSET C FOR OTHER VOLTAGES. RESISTORS SHOWN FOR 200/208V AND 200-400 RLA.
8. SEE SERVICE MANUAL FOR INDIVIDUAL SECONDARY VOLTAGES.
9. THREE PHASE POWER SUPPLY VOLTAGE SEE UNIT NAMEPLATE.
10. 20A FOR 208V; 10A FOR 440/460/480V; OR 8A FOR 575/600V.
11. RELAY COILS NOT SHOWN. CONTACTS ARE CONTROLLED BY THE LOGIC OF THE MICRO-MODULE (1U3). SEE SEQUENCE OF OPERATION LINES 102 - 115 NEXT PAGE.

⚠ WARNING

DISCONNECT ELECTRIC POWER SUPPLY BEFORE SERVICING TO PREVENT INJURY OR DEATH DUE TO ELECTRICAL SHOCK.

AVERTISSEMENT

DEBRANCHER DU CIRCUIT D'ALIMENTATION ELECTRIQUE AVANT L'ENTRETIEN POUR EVITER BLESSURE OU MORT PAR ELECTROCUTION.

⚠ CAUTION

USE COPPER CONDUCTORS ONLY TO PREVENT EQUIPMENT DAMAGE. UNIT TERMINALS ARE NOT DESIGNED TO ACCEPT ANY OTHER WIRING.

ATTENTION

UTILISER SEULEMENT DES CONDUCTEURS EN CUIVRE POUR EVITER D'ENDOMMAGER L'EQUIPMENT. LES BORNES NE SONT PAS PREVUES POUR AUTRES TYPES DE FILS CONDUCTEURS.

X39470579B

Figure 19 (Continued)

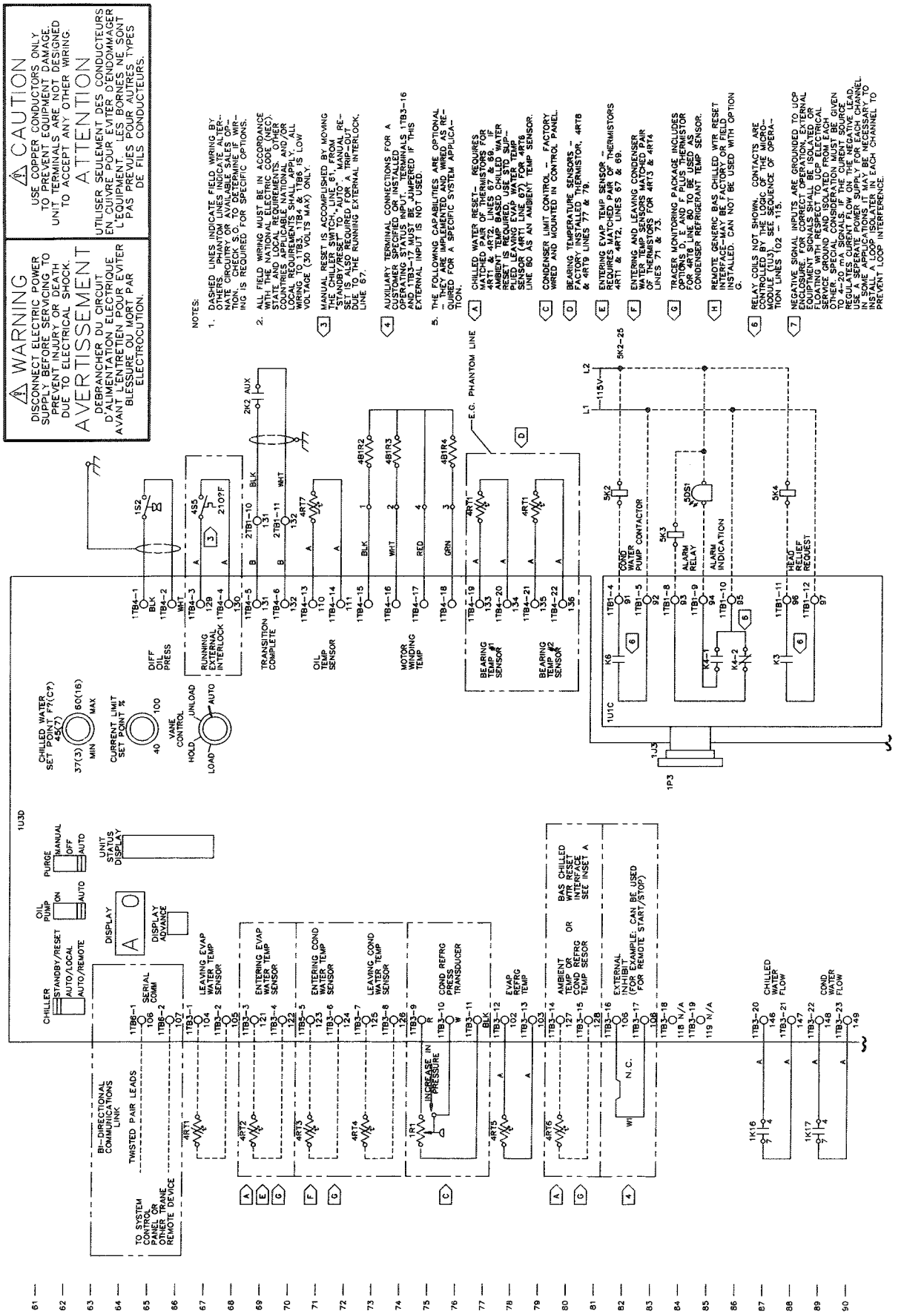

Figure 19
(Concluded)

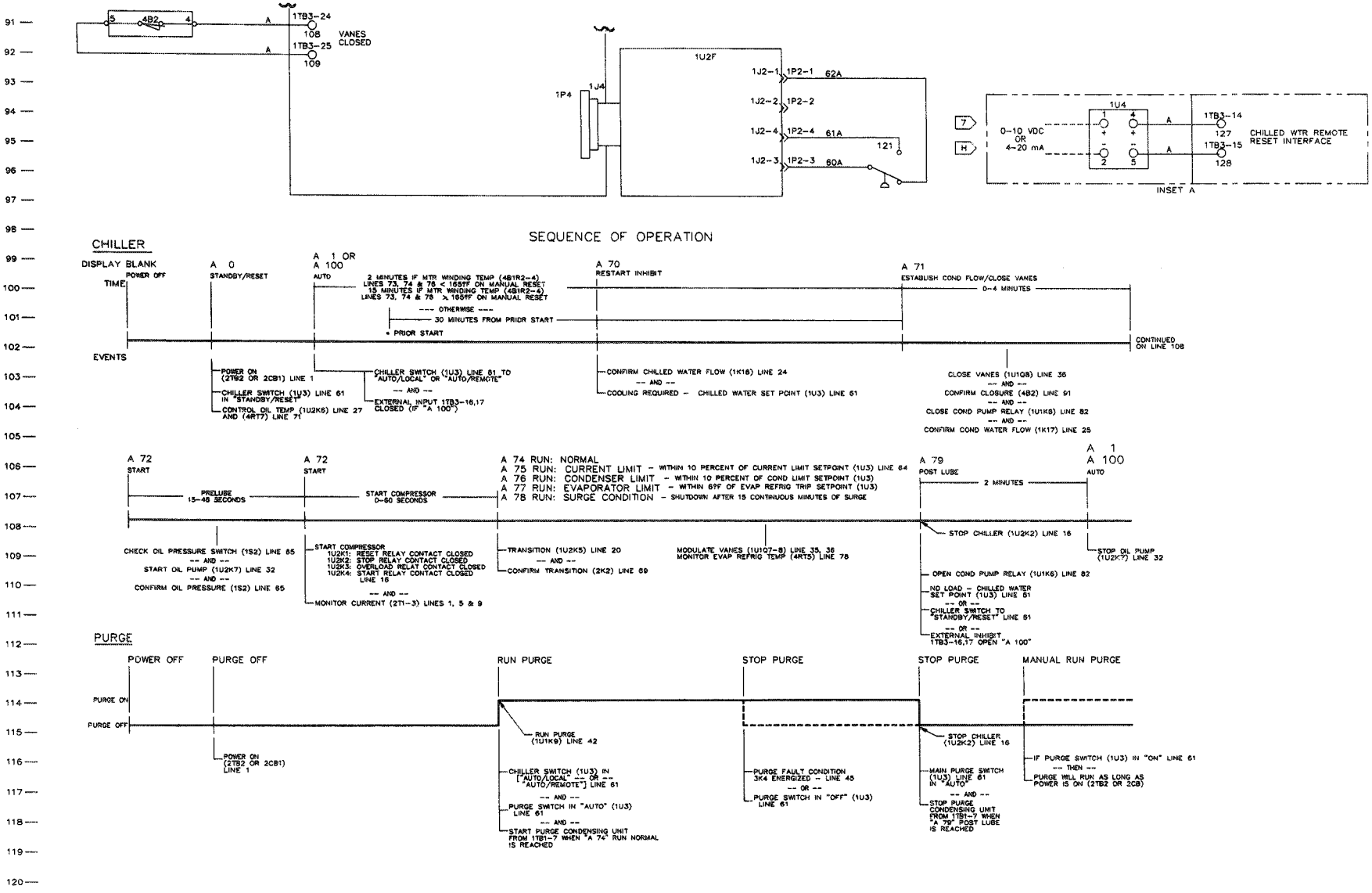

X39470580C

Serial Communication Interface (SCI)

This UCP control option allows micro module 1U3 to exchange information (e.g., operating parameters, setpoints and commands) with an SCP699 System Control Panel. Figure 20 illustrates how such a communication control network might appear. Notice that twisted-pair connectors are used to establish the communication link between the unit(s) and the SCP.

Additional information about this control option is provided in the installation manual and operator's guide that ships with the SCP699 System Control Panel.

Note: The SCI and chilled water reset (CWR) options are mutually exclusive; that is, a CVHE/CVHF unit cannot be equipped with both SCI and CWR.

Chilled Water Reset (CWR)

Chilled water reset is designed for those applications where the design chilled water temperature is not required at part load. In these cases, the leaving chilled water temperature setpoint can be reset upward using the chilled water reset option.

Optional chilled water reset (CWR) consists of a factory-installed module in the unit control panel and a field-installed temperature sensor. Sensor location is dependent on whether "load" or "ambient" chilled water setpoint rest is desired:

If "load" CWR is selected, the CWAR sensor is field-installed in the return chilled water piping, and connected to Terminals 1TB3-3 and -4 of micro module 1U3.

With selection of "ambient" CWR, the sensor is connected to 1U3 terminals 1TB3-14 and -15, and is typically field-installed just inside the building's fresh air intake duct, or on the north exterior wall of the building. In either case, shelter the sensor from direct sunlight and the elements.

Operator selection of the type of chilled water reset desired for a given application is accomplished at the unit control panel. To access the chilled water reset controls, open the control panel door; the CWR reset type, action and reference knobs are located at the far left of micro module 1U3. See Figure 21.

WARNING: To prevent injury or death due to electrocution, use care when performing control set-ups, adjustments or other service-related operations with power on.

Notice that the conversion tables needed to determine CWR control settings (i.e., Tables A and B) are provided on the face of the micro module, at the immediate right of the current limit setpoint potentiometer. (Both tables are also shown in Figure 21) for your convenience.

Note: There are several important points to consider when using the UCP's optional chilled water reset (CWR) function:

a. To enable the CWR module, be sure to set the chiller switch at "Auto/Remote". (Notice that the "Remote Chilled Water Setpoint" status indicator light is illuminated when the CWR function is active.

b. Once the CWR module sends micro module 1U3 a new chilled water setpoint, it will not issue another setpoint change until the actual leaving chilled water temperature is within 1 F(-17 C) of setpoint for 75 seconds.

c. As long as the chiller switch is set at"Auto/Remote", the CWR function remains active even while the unit is idle!

Load-Based CWR

1. Reset Type Knob: Set at "Evap. Delta-T".

2. **Reset Reference Knob:** Set at the design delta-T (DTFL) for the unit. Use Table B (Figure 20) to convert the unit DTFL to a letter code ("A" through "H").

Note: In those instances where the DTFL value falls between the values listed, always use the next lower value.

Example: Chiller A is designed to operate with an entering chilled water temperature (CWT) of 56 F (14 C), and a leaving chilled water temperature of 44 F (8 C).

a. **Determine Chiller A's design Delta-T.**

DTFL = Design Ent. CWT - Design Lvg.
CWT
DTFL = 56 F - 44 F (14 C - 8 C)
DTFL = 12 F (-11 C)

b. **Convert Chiller A's DTFL to a letter code.** Locate 12 F (-11 C) DTFL in Table B under "Evap. Delta-T"; 12 F (-11 C) DTFL = "E".

c. Adjust the reset reference knob to control setting "E".

Figure 20
Serial Communication Interface (SCI; Typical Network

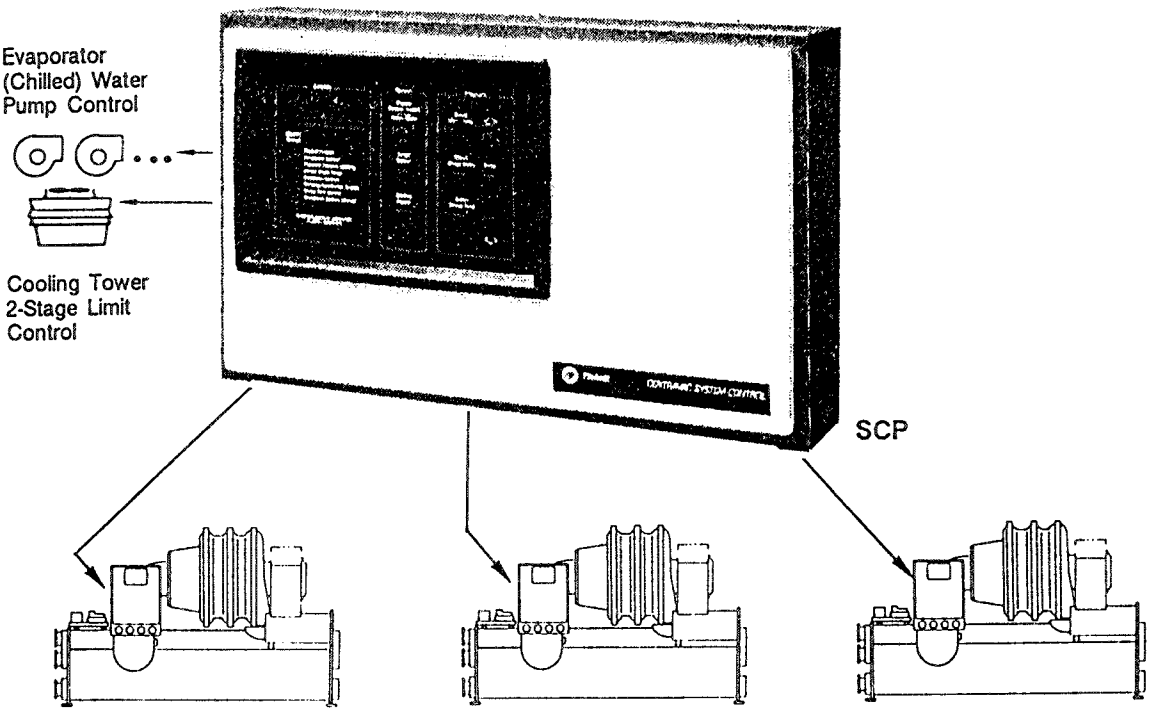

CVHE or CVHF
Chillers w/UCP695
Control Panels

Art No.
RF/CTV-1900
RF/CTV-1901

Figure 21
Micro Control Module (1U3) w/Chilled Water Reset Option

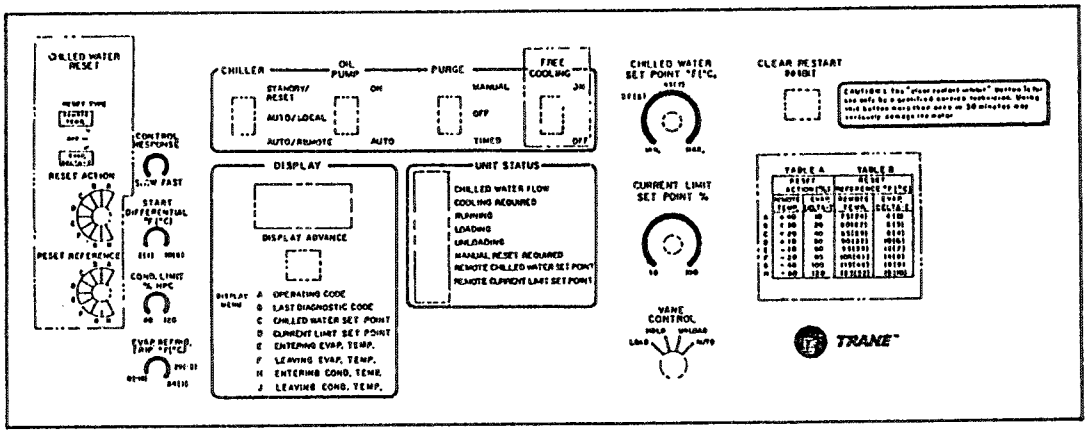

Table A Table B

	Reset Action (%)		Reset Reference F (C)	
	Remote Temp.	Evap. Delta-T	Remote Temp.	Evap. Delta-T
A	+ 40	10	75 (24)	4 (2)
B	+ 30	20	80 (27)	6 (3)
C	+ 20	40	85 (29)	8 (4)
D	+ 10	50	90 (32)	10 (6)
E	- 10	60	95 (35)	12 (7)
F	- 20	80	105 (41)	14 (8)
G	- 40	100	115 (46)	16 (9)
H	- 60	120	125 (52)	18 (10)

Notes:

1. Control option features (i.e., free cooling and chilled water reset) shown above are enclosed in phantom-line boxes.
2. Tables A and B on the above illustration are reproduced in larger type at left.

3. **Reset Action Knob:** Set at the amount of reset desired. Use the following equation and Table A (Figure 21) to determine the amount of reset desired; then convert this amount to a letter code (i.e., "A" thru "H").

RCWS = PCWS + RAS [DTFL - (ENT-LVG)]

Where:

RCWS = Reset Chilled Water Setpoint
PCWS = Front Panel Chilled Water Setpoint
RAS = Reset Action Setpoint
DTFL = Design Delta-T at Full Load
ENT = Entering Chilled Water Temperature
LVG = Leaving Chilled Water Temperature

Notes about this equation:

a. To convert the reset action values in Table A from percentages to decimal values, divide by 100. Decimal values must be used for the RAS variable in the equation.

b. System control will not allow chilled water reset downward even though it is possible in this equation.

c. Increasing the reset action setpoint (RAS) to a larger number results in more reset.

d. If you know how many degrees of chilled water reset are desired (i.e., (RCWS), as well as the DTFL, ENT and LVG, the equation can be rearranged to solve for the reset action setpoint (RAS):

RAS = RCWS - PCWS
[DTFL - (ENT - LVG)]

Review Examples 1 and 2 below to ensure that you understand both: (a) how to calculate a load-based reset chilled water setpoint; and, (b) how this reset value changes with the selected reset reference and reset action control settings.

Example # 1:

DTFL = 10.0 F (-12 C)
PCWS = 45.0 F (8 C)
RAS = 0.5 (i.e., "50" in Table A)

When the unit is operating at full load, ENT is 55F (13 C) and LVG is 45 F (8 C), so:

RCWS = 45 F + 0.C [10 F - (55 F - 45F)]
RCWS = 45 F + 0 F
RCWS = 45 F (8 C)

Since LVG and RWCS are equal (i.e., both are 45 F) (8 C), there is no reset at this full load condition.

If this same unit is only half loaded (i.e., ENT - LVG = 5F) (-15 C), then:

RCWS - 45 F + 0.5 [10 F - 5 F]
RCWS = 45 F = 2.5
RCWS = 47.5 F (9 C)

Example # 2:
DTFL = 10.0 F (-12 C)
PCWS = 45.0 F (8 C)
RAS = 1.0 (e.e, "100" in Table A)

Chiller B is operating at full load, and the delta-T across the evaporator (ENT - LVG) is 10 F (-12 C) , so:

RCWS = 45 F + 1.0 [10 F - 10F]
RCWS = 45 F = 0 F
RCWS = 45 F (8 C)

Under this full load condition, LVG and RWCS are again equal (i.e., both are 45 F) (8 C), so there is no reset.

If this same unit is only half loaded (i.e., ENT - LVG = 5 F) (-15 C), then:

RCWS = 45 F + 1.0 [10 F - 5 F]
RCWS = 45 F + 1.0 [5]
RCWS = 50 F (10 C)

In this situation, the chilled water setpoint will be rest 5 F (-15 C) will be reset 5 F (-15 C) upward, and the chiller will operate with an entering chilled water temperature of 55 F (13 C) and a leaving chilled water temperature of 50 F (10 C).

Notice that an RAS of 1.0 yields a constant return temperature; as unit load varies, the leaving chilled water setpoint is reset so that the entering chilled water temperature is always 55 F (13 C).

Ambient-Based CWR

When ambient-based chilled water reset is desire, the CWR controls must be adjusted as described below:

1. **Reset Type Knob:** Set at "Remote Temp".

2.**Reset Reference Knob:** This knob is used to set the temperature below or above which reset begins (i.e., design ambient). Use Table B (Figure 21) to convert the desired design ambient temperature to a letter code (i.e., "A" through "H").

Example: Chiller A's design ambient temperature is 90 f (33 C) (i.e., chilled water reset is desired if the ambient temperature falls below 90 F) (33 C).

a. Convert Chiller A's design ambient to a letter code. Locate 90 F (33 C) in Table B under "Remote Temp."; 90 F = "D".

b. Adjust the reset reference knob to control setting "D".

3. **Reset Action Knob:** Set at the amount of reset desire. Use the following equation and Table A (Figure 21) to determine the amount of reset desired; then convert this amount to a letter code (i.e., "A" through "H").

RCWS = PCWS + RAS (RRS - AMB)

Notes about this equation:

a. To convert the reset action values in Table A from percentages to decimal values, divide by 100. Decimal values must be used for the RAS variable in the equation.

b. Increasing the RAS to a larger number results in more reset.

c. Using a negative RAS causes the chilled water setpoint to be reset upward whenever the ambient temperature exceeds the design ambient. System control will not allow the chilled water setpoint to be reset downward even though it is possible in this equation.

Review Example 3 to ensure that you understand the correlation between the reset action setting and the reset chilled water setpoint in ambient-based chilled water reset.

Example # 3

PCWS = 45.0 F (8 C)
RAS = 0.2 (e.e., "20" in Table A)
RRS = 90.0 F (33 C)

When the outdoor air temperature is 80 F (27 C), then:
RCWS = 45 F + 0.2 (90 F - 80 F)
RCWS = 45 F = 2 F
RCWS = 47 F (9 C)

If the outdoor air temperature drops to 70 F (22 C), then:
RCWS = 45 F + 0.2 (90 F - 70 F)
RCWS = 45 F + 4 F
RCWS = 49 F (33 C0

Thus, a RAS of 0.2 (i.e., + 20%) provides 2 F of reset for every 10 F drop in outdoor air temperature below the design ambient.

Remote Generic BAS/CWR Interface

In CVHE applications where the operator wishes to use a generic building automation system (BAS) to reset the chilled water setpoint, a "chilled water reset interface" module (1U4) must be either factory- or field-installed inside the UCP enclosure.

Once installed, the interface module "converts" a 0-10 VDC (or a 4-20 mA) output signal from the generic BAS to a usable input for the CWR module.

A special "customer information" drawing accompanies each CVHE/ CVHF unit equipped with the generic BAS/CWR interface option. the wiring information operational data included on this drawing are shown in Figure 22.

Figure 22
Remote Generic BAS/CWR Interface Option

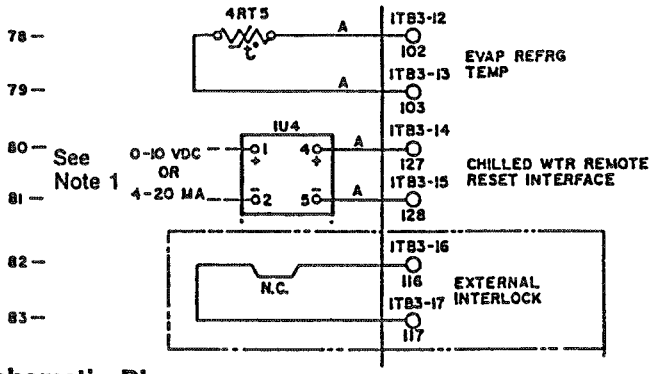

Schematic Diagram
(Use in conjunction with the schematic diagrams that shipped with the unit.)

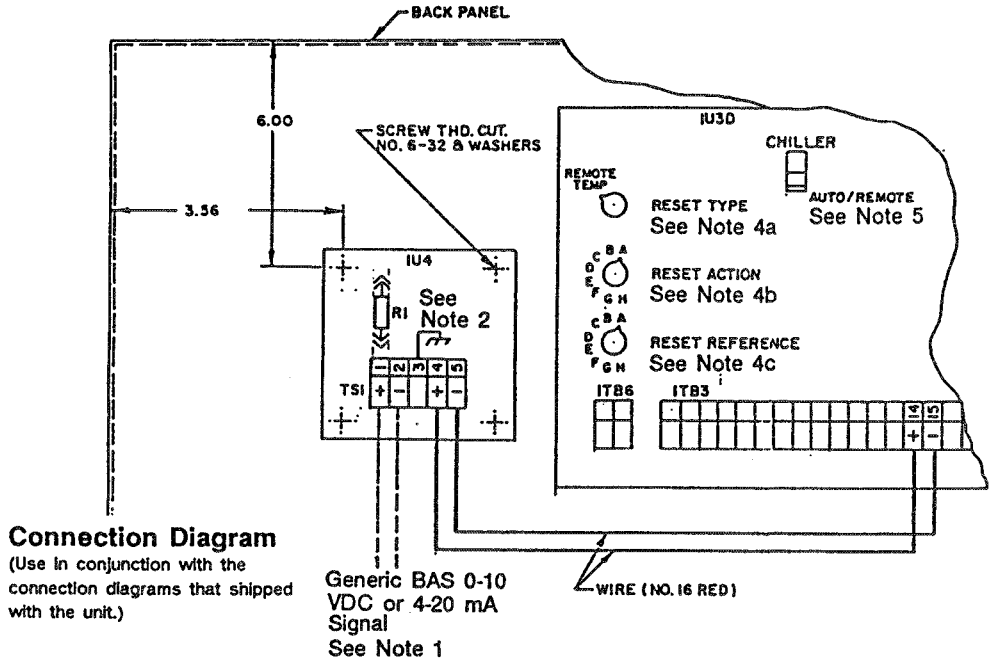

Connection Diagram
(Use in conjunction with the connection diagrams that shipped with the unit.)

Reset Action (B) Switch Position			
B (+10)	C (+20)	D (+30)	A (+40)
5 (2.8)	10 (5.5)	15 (8.3)	20 (11.1)
	9 (5.0)		18 (10.0)
4 (2.2)	8 (4.4)	12 (6.7)	16 (8.9)
	7 (3.8)		14 (7.8)
3 (1.7)	6 (3.3)	9 (5.0)	12 (6.7)
	5 (2.8)		10 (5.5)
2 (1.1)	4 (2.2)	6 (3.3)	8 (4.4)
	3 (1.7)		6 (3.3)
1 (0.5)	2 (1.1)	3 (1.7)	4 (2.2)
0.45 (0.25)	0.90 (0.50)	1.35 (0.75)	1.80 (1.00)
0	0	0	0

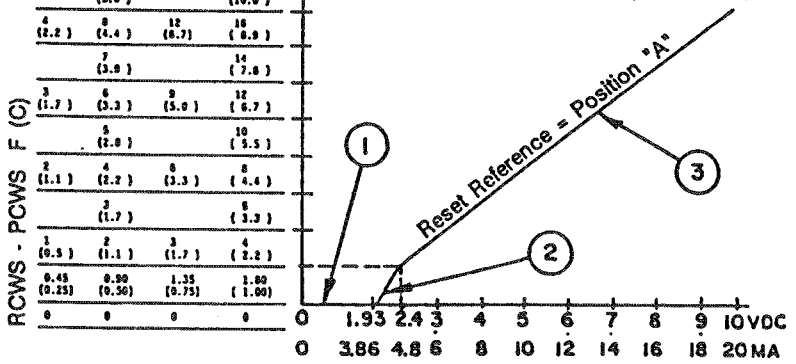

Note: The chilled water setpoint will be reset in integer F only.

RCWS = Reset Chilled Water Setpoint
PCWS = Front Panel Chilled Water Setpoint

(1) RCWS = PCWS

(2) RCWS - PCWS = Reset Action x (-18.3 ÷ 9.50 VDC)
or
RCWS - PCWS = Reset Action x (-18.3 ÷ 4.75 mA)

(3) RCWS - PCWS = Reset Action x (-9.9 ÷ 6.010 VDC)
or
RCWS - PCWS = Reset Action x (-9.9 ÷ 3.005 mA)

Notes:
1. Negative signal inputs are grounded to the UCP's enclosure. For correct operation, external equipment signals must be isolated or floating with respect to the UCP's electrical service ground.
2. Remove resistor R1 when a 0-10 VDC input is used.
3. Dashed lines (- - - -) represent field-installed wiring.
4. To activate the remote generic BAS/CWR interface, complete these micro module (1U3D) control adjustments:
   a. Set "Reset Type" at the "Remote Temp." position.
   b. Set "Reset Action" to "A", "B", "C" or "D". (Refer to the chart at left to determine the appropriate setting.)
   c. Set "Reset Reference" to the "A" position.
5. To enable the remote generic BAS/CWR interface, the UCP's chiller switch must be set at "Auto/Remote".
6. Maximum continuous input = 15 VDC (30 mA); minimum continuous input = -4 VDC (-8 mA). (Below these values, diagnostic code b AE will appear on the micro module [1U3D] display.)
7. When the chiller is not running, the micro module (1U3D) setpoint "steps" toward the desired generic BAS setpoint at a rate of approximately 1 F (0.55 C) per second.

When the chiller is running, 1U3D's setpoint is changed by 1 F (0.55 C) only when chilled water temperature is "in control" for 75 seconds. ("In control" is defined as the 1U3 setpoint ± X, where X varies from 0.8 to 1.6 F (0.44 to 0.88 C) based on the micro module's differential-to-start setting.

4533-2379-0A

Unit Start-up Procedures

Daily Unit Start-Up

Note: Refer to Figures 23 and 24 for UCP Start-Run-Shutdown sequence and UCP timing functions.

1. Start the chilled water pump if it was turned off at the end of the previous day.

While the chiller switch is positioned at "Standby/Reset", the UCP checks for closure of the chilled water flow switch (5S2). Illumination of the "Chilled Water Flow" status indicator light indicates that flow is established.

If flow switch 5S2 fails to close or if it reopens following a closure diagnostic b ED appears on the display.

2. Check the oil tank oil level; the level must be visible in or above the lower sight glass. Also, be sure to check the oil tank temperature; normal oil tank temperature before start-up is 140°F to 145° F (60 to 63 C).

Note: the oil heater is energized whenever power is supplied to the unit and the oil temperature is less than 140°F (60 C).

3. Verify that the vane control knob and oil pump switch are positioned at "Auto", and that the purge switch is set at "Timed".

Note: Unit start-up will not occur if the oil pump switch is in the "On" position.

4. If the chiller is equipped with the free cooling option, ensure that the free cooling switch is in the "Off" position.

5. Check the chilled water setpoint and readjust it, if necessary. (Setpoint value can be observed by pressing the advance menu button until code prefix "C" appears on the display.)

6. If necessary, readjust the current limit setpoint. (To determine the setpoint value, press the advance menu push-button until code prefix "d" appears on the display.)

7. Adjust the 3-position chiller switch from "Standby/Reset" to "Auto/Local" or "Auto/Remote". (The operating code appearing on the display changes from A 0 to A 1.) the UCP operation and timing functions are illustrated in Figures 23 and 24.

As state goes from A0 to A1 or A70, the logic passes through A88 briefly. As A88 is flashed all safety sensors are checked for short circuits and open circuits. If a sensor is bad, a latching diagnostic will occur indicating which sensor.

The UCP also checks compressor motor winding temperature, and a 4-minute delay is initiated if the winding temperature is less than 165° F. If it is greater than 165° F, however, a 15-minute delay period begins.

Next, the UCP checks the leaving evaporator water temperature and compares it to the chilled water setpoint. If the difference between these values is less than the start differential setpoint, cooling is not needed.

If the UCP determines that the difference between the evaporator leaving water temperature and chilled water setpoint exceeds the start differential setpoint, the unit enters the restart inhibit mode, and the "Cooling Required" status indicator light illuminates.

At the end of the restart inhibit period, the UCP issues a signal to start the condenser water pump. The operating code appearing on the display changes from A 70 to A 71 as the UCP checks for condenser water flow. If flow is not proven (i.e., flow switch 5S3 does not close) within 3 minutes, the unit is locked out; latching diagnostic b dC will flash alternately with operating code A 71 on the display.

With condenser water flow established, the UCP checks the position of the inlet guide vanes; they must be closed before a start sequence can occur. If the vanes are open, the UCP sends a "close" signal to the actuator. A latching diagnostic (i.e., b FA flashing alternately with operating code (A 71) occurs if vane closure is not established within 3 minutes.

Once the inlet guide vanes are closed, the unit enters the start mode (A 72) and the UCP sends a signal to begin oil pump operation. (In addition, an interval timer energizes at this time to close a solenoid valve in the oil sump vent line for a 2-minute period.)

Figure 23 UCP Start-Run-Shutdown Sequence

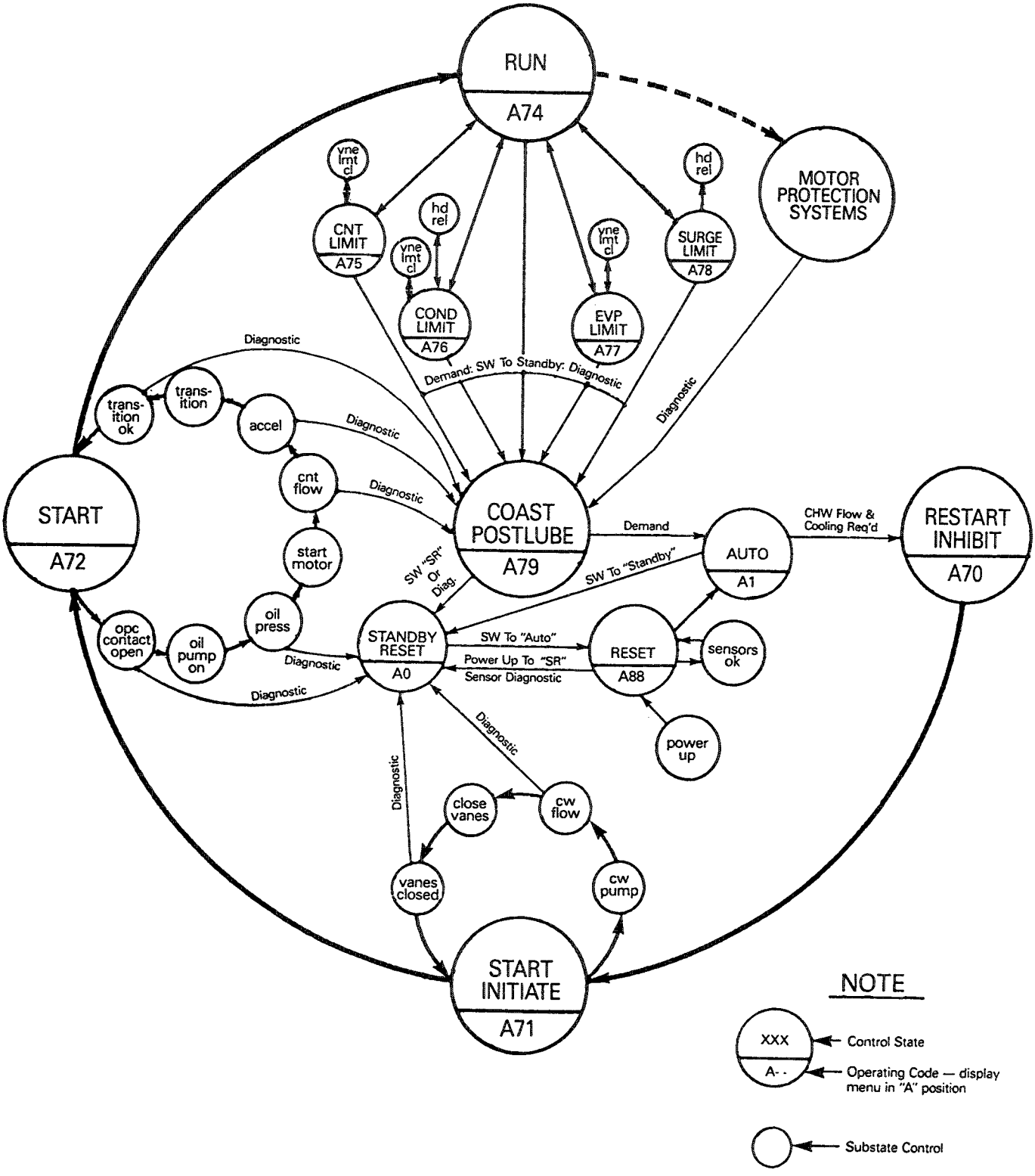

Figure 24
UCP Timing Functions

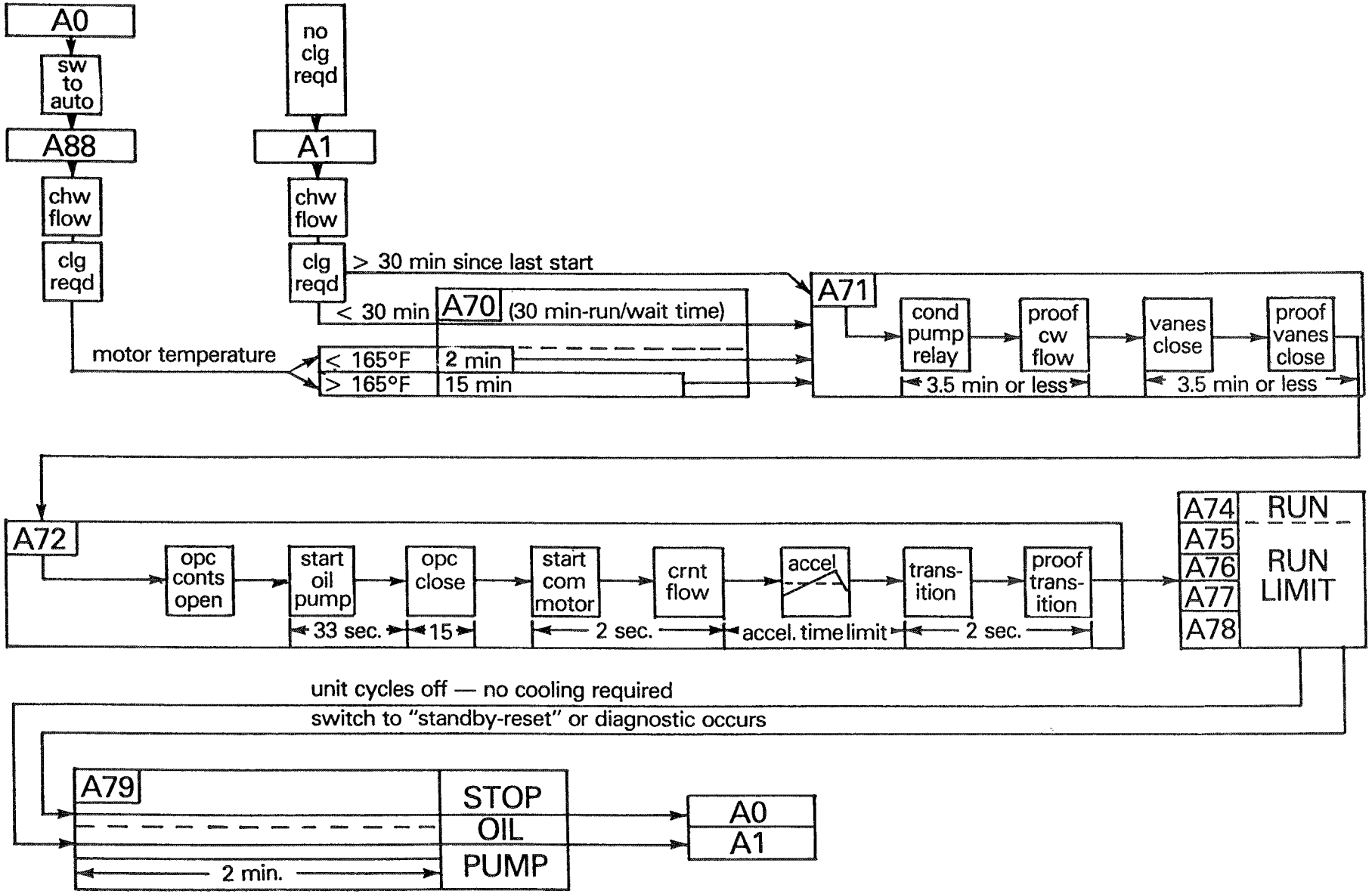

Sufficient oil pressure (i.e., 15 ± 1 psid) must be confirmed within 33 seconds, or the unit locks out on low oil pressure. (Latching diagnostic b F2 will flash alternately with operating code A 72 on the display.) A 15-second prelube cycle begins when oil pressure is successfully established.

Note: Since (a) "sufficient" oil pressure may be confirmed at any point during the 33-second "oil pressure overdue" timing interval, and (b) the 15-second "prelube" period begins only when sufficient oil pressure is sustained, the actual time required to "establish oil pressure" and "prelube" can be 15 to 48 seconds.

At the end of the prelube period, the UCP sends a start signal to the compressor motor. Within 2-seconds, 3 phases of current in the correct phase sequence must be detected if there is no current 1 or 2 phases missing, or reverse electrical sequence diagnostics will occur within the maximum acceleration time setpoint and proof of transition must occur within 2-second s of transition initiation, or unit start-up is aborted. (If this occurs, the unit goes into the post-lube mode--A 79--and coasts to a stop. Latching diagnostic b EE or b F0 will flash on the display.)

If the compressor motor starts and accelerates successfully, operating code A 74 (Run: Normal) appears on the display and the "Running" status indicator light illuminates. At this time the purge unit will start operating on "Automatic" and will continue to operate as long as chiller compressor is running.

Note: Whenever the UCP detects a latching diagnostic condition during start-up, unit operation is locked out and manual reset is required before the start-up sequence can begin again. If the fault condition has not cleared, the UCP will not permit restart. Remember that a manual reset erases the diagnostic code identifying the fault; the display will only show operating code A 0, with no indication of what the problem was.

When the cooling requirement is satisfied, the UCP originates a "stop" signal and the unit enters a 2-minute post-lube (A 79) period. the compressor motor and condenser water pump starters are de-energized immediately, but the oil pump continues to run during this 2-minute interval; the "Running" status indicator light also remains lit during this period.

Once the post-lube cycle is complete, the unit returns to the auto (A 1) mode.

Seasonal Unit Start-Up

Note: Refer to Figures 23 and 24 for UCP Start-Run-Shutdown sequence and UCP timing functions.

1. Close all drain valves, and re-install the drain plugs in the evaporator and condenser headers.

2. Service the auxiliary equipment according to the start-up/maintenance instructions provided by the respective equipment manufacturers.

3. Vent and fill the cooling tower, if used, as well as the condenser and piping. At this point, all air must be removed from the system (including each pass). Then close the vent valves in the condenser water boxes.

4. Open all of the valves in the evaporator chilled water circuit.

5. If the evaporator was previously drained, vent and fill the evaporator and chilled water circuit. When all air is removed from the system (including each pass), close the vent valves in the evaporator water boxes.

6. Lubricate the external vane control linkage.

7. Check the adjustment and operation of each safety and operating control.

8. Close all disconnect switches.

WARNING: To prevent injury or death due to electrical shock or contact with moving parts, use care when measurements, adjustments, or other service-related operations are performed with power on.

9. Start the chilled water pump. While the chiller switch is set at "Standby/Reset", the UCP checks for closure of the chilled water flow switch (5S2), illumination of the "Chilled Water Flow" status indicator light indicates that flow is established.

If flow switch 5S2 fails to close or if it reopens following a closure diagnostic bEd appears on the display.

10. Check the oil tank oil level; the level must be visible in or above the lower sight glass. Also, be sure to check the oil tank temperature; normal oil tank temperature before start-up is 140 to 145 F (60 to 63 C).

Note: Unit start-up will not occur if the oil pump switch is in the "On" position.

11. If the chiller is equipped with the free cooling option, ensure that the free cooling switch is in the "Off" position.

12. Check the chilled water setpoint and readjust it, if necessary. (Set point value can be observed by pressing the advance menu button until code prefix "C" appears on the display.

13. If necessary, readjust the current limit setpoint. (To determine the setpoint value, press the advance menu push-button until code prefix "d" appears on the display.)

14. Adjust the 3-position chiller switch from "Standby/Reset" to "Auto/Local" or "Auto/Remote".

Unit Shutdown Procedures

Daily Unit Shutdown

Note: Refer to Figures 23 and 24 for UCP Start-Run-Shutdown sequence and UCP timing functions.

1. Adjust the chiller switch to the "Standby/Reset" position.

2. If desired, turn off the chilled water pump.

Seasonal Unit Shutdown

Note: Refer to Figures 23 and 24 for UCP Start-Run-Shutdown sequence and UCP timing functions.

1. Adjust the chiller switch to the "Standby/Reset" position.

2. If desired, turn off the chilled water pump at the pump's push-button station. (Or, stop chilled water flow by the means devised for this particular application.)

3. Open all disconnect switches except the control power disconnect switch.

WARNING: To prevent injury or death due to electrical shock or contact with moving parts, use care when servicing system with power on.

Caution: Control power disconnect must remain closed during entire shutdown period to allow oil sump heater operation. This prevents refrigerant from condensing in oil sump.

4. Drain the condenser piping and cooling tower, if used.

5. Remove the drain and vent plugs from the condenser headers to drain the condenser.

6. Once the unit is secured for winter, the maintenance procedures described under "Annual Maintenance" in the Periodic Maintenance section of this manual should be performed by qualified Trane service technicians.

Note: During extended shutdown, be sure to operate the purge unit for a 2-hour period every 2 weeks. This will prevent the accumulation of air and non-condensibles in the machine. To start the purge, adjust purge switch to the "Manual" position.

CAUTION: Do not allow the chiller to increase in temperature (pressure) while the unit is off to temperature above 110°F (43C) since this will cause the rupture disk to relieve and discharge the refrigerant from the machine. Continuous running of pumps while the machine is off may cause this condition to occur. The rupture disk is designed to relieve if the pressure in the evaporator exceeds 15 psig.

Periodic Maintenance

Overview

This section describes basic chiller preventive maintenance procedures, and recommends the intervals at which these procedures should be performed. Use of a periodic maintenance program is important to ensure the best possible performance and efficiency from a CenTraVac chiller.

Recommended purge maintenance procedures for the **Purifier Purge unit** are covered by PRG-OM-4.

An important aspect of the chiller maintenance program is the regular completion of a CenTraVac "Operating Log". An example of this log is provided in this manual. When filled out accurately by the machine operator, the completed logs can be reviewed to identify any developing trends in the chiller's operating conditions.

For example, if the machine operator notices a gradual increase in condensing pressure during a month's time, he can systematically check, then correct the possible cause(s) of this condition (e.g., fouled condenser tubes, non-condensibles in the system, etc.)

Daily Maintenance and Checks

[ ] Check the chiller's evaporator, condenser and purge drum pressures, oil sump pressure, and net oil pressure. Compare the readings obtained with the values provided in Table 6.

Caution: If frequent purging is required (i.e., monitor purge timer, identify and correct source of air or water leak as soon as possible. Moisture contamination caused by leakage can shorten chiller life expectancy.

[ ] Check the oil level in the chiller oil sump using the 2 sight glasses provided in the oil sump head. When the unit operating, the oil level should be visible in the lower sight glass.

Weekly Maintenance

[ ] Complete all daily maintenance procedures and checks.

Note: If the unit is operating in the cooling mode, close the manual shutoff valves on the heating condenser and open the valves on the cooling condenser. Reverse this procedure when the unit is operating in the heat-recovery mode.

Table 6
Normal Chiller Operating Characteristics

Operating Characteristic	Normal Reading
Evaporator Pressure	12 to 18" Hg (vacuum)
Condenser Pressure (see Notes 1, 2)	2 to 12 psig (standard condensers)
Purge Drum Pressure	0 to 25 psig
Oil Sump Temperature:	
Unit Not Running	140 to 145 F (60 to 63 C)
Unit Running	115 to 150 F (47 to 66 C)
Net Oil Pressure	12 to 18 psid

Notes:
1. Condenser pressure is dependent on condenser water temperature, and should equal the saturation pressure of R-11 at a temperature 5-10 F (-15 to -12 C) above that of leaving condenser water at full load.
2. Normal pressure readings for ASME condensers exceed 12 psig.
3. Net oil pressure (i.e., usable oil pressure) is determined by subtracting the low oil pressure value from the high oil pressure gauge reading.

Example:
High oil pressure gauge = 9 psig;
Low oil pressure gauge = 18" Hg (vacuum).

First, convert 18" Hg to psig (i.e., -18/2.03 = -8.87 psig). Then, subtract -8.87 psig from 10 psig (i.e., 10 - [-8.87] = 9 + 8.87 = 17.87 psid). In this example, the net oil pressure of 17.87 psid is within the acceptable limits.

60 Hz
CenTraVac® Operating Log
For CVHB/E/F w/UCP695

TRANE

The Trane Company
An American Standard Company

Job Name		Date					
Unit/Tag #							
Model #		Time					
Serial #							
FULL LOAD DESIGN	REF MONITOR LEVEL						
	OPERATING COND						
	OPERATING CODE						
	LAST DIAGNOSTIC						
DEG F _____ >	LCHW SETPOINT						
	CNT LIMIT SP						
	CHILLER STARTS						
	CHILLER RUN HRS						
DESIGN	VOLTAGE AB						
VOLTS _____ >	VOLTAGE AB						
HERTZ _____	VOLTAGE BC						
	AMPERAGE L1						
	AMPERAGE L2						
RLA _____>	AMPERAGE L3						
	AMP AVG						
	% OF RLA						
125 - 150 DEG >	OIL SUMP TEMP						
	OIL TEMP TO BRGS						
	OIL LEVEL						
	LO OIL PRESS						
	HI OIL PRESS						
	NET OIL PRESS						
	PURGE RUN HRS						
	CHW PSID						
_____PSID ____GPM	CHW TEMP IN						
DEG F _____>	CHW TEMP OUT						
DEG F _____>	CHW TEMP DIFF						
DEG F _____>	EVAP TEMP						
	EVAP PRESS						
	CW PSID						
_____PSID ____GPM	CW TEMP IN						
DEG F _____>	CW TEMP OUT						
DEG F _____>	CW TEMP DIFF						
DEG F _____>	COND TEMP						
	COND PRESS						
	OPER INITIALS						

COMMENTS:

LOP/2 + HOP = Net Oil Pressure, CHW = Chilled Water, CW = Condenser Water

Every 3 Months

WARNING: To prevent injury or death due to electrical shock or contact with moving parts, lock unit disconnect switch in open position.

[ ] Complete all recommended weekly maintenance procedures. (Refer to the previous sections for details.

[ ] Clean all water strainers in the CenTraVac water piping system.

Every 6 Months

WARNING: To prevent injury or death due to electrical shock or contact with moving parts, lock unit disconnect switch in open position.

[ ] Complete all recommended quarterly maintenance procedures.

[ ] Lubricate the vane control linkage bearings, ball joints, and pivot points; a few drops of light machine oil (e.g., SAE-20) is sufficient.

[ ] Drain the contents of the rupture disc/purge discharge vent line drip leg into an evacuated waste container at a minimum and more often if the purge operated excessively.

Also, apply 1 or 2 drops of oil on the vane operator shaft and spread it into a very light film; this will protect the shaft from moisture and rust.

Off-Season Maintenance

During those periods of time when the chiller is not operated, **be sure control panel is energized.**

Annual Maintenance

Shut down the chiller once each year to check the items listed below; a more detailed inspection checklist is provided on the "Model CVHE CVHF CenTraVac Annual Inspection Checklist and Report" illustrated in this manual.

[ ] Perform the annual maintenance referred to in the Maintenance Section of the purge manual.

[ ] Use an ice water bath to verify that the accuracy of the evaporator refrigerant temperature sensor (4RT5) is still within tolerance (i.e., ± 2.0 F at 32 F).

If the evaporator refrigerant temperature displayed on the UCP's read-out is outside this 4-degree tolerance range, replace the sensor.

Note: If the sensor is exposed to temperature extremes outside its normal operating range (0 F to 90 F) (-18 C to 32 C), check its accuracy at 6-month intervals.

Compressor Oil Change on CVHE /CVHF units.

[ ] Recommendations are to subscribe to an oil analysis program to determine the necessity to change oil, rather than change it automatically every year. This will reduce the chiller's overall lifetime oil consumption and minimize refrigerant emissions. A drain fitting should be installed in the oil line after the oil filter for obtaining oil samples.

Oil Change Procedure

When oil analysis indicates the need to change compressor oil, use the following procedure for removing oil.

CAUTION: To prevent possible burnout of the oil sump heater, be sure to open control panel disconnect switch before draining the sump.

[ ] Draw the oil from the chiller through the oil charging valve on the chiller oil sump into an approved, evacuated tank, or;

[ ] Pump the oil from the chiller through the oil charging valve into an air-tight resealable container, using a magnetically-driven auxiliary pump.

Forcing the oil from the oil sump by pressurizing the chiller (i.e. by raising chiller temperature or adding nitrogen) is NOT recommended.

Refrigerant dissolved in the oil can be removed and returned to the chiller by using an appropriate deep-vacuum recovery unit and heating/agitating the oil container. Follow all Federal, state and local regulations with regard to disposal of waste oil.

Replacing Oil Filter

Replace oil filter: (1) annually, (2) at each oil change, (3) or if erratic oil pressure is experienced during chiller operation.

Replacement Procedure

[ ] Run oil pump for two to three minutes to insure that the oil filter is warmed up to oil sump temperature.

[ ] Close the shutoff valves before and after the filter and open the filter drain valve. Time required to drain oil can be momentarily opening the oil sampling drain valve.

[ ] Allow time for the filter to drain. Remove filter and place into a resealable container. Follow all

Annual Inspection Check List and Report: CVHEs/CVHFs w/UCP695 Control Panels

Review unit with operating personnel.

Compressor Motor

[ ] Motor continuity check
Good [ ] Open [ ]

[ ] Check and tighten motor terminals

[ ] Meg motor
Phase 1___ Phase 2 ___ Phase 3 ___

[ ] Check nameplate rating
Amps ___

Starter

[ ] Check condition of starter contacts
Good [ ] Fair [ ] Replace [ ]

Oil Sump

[ ] Change oil
If oil analysis, refer to program procedures.
___ Gallons (7) required

[ ] Check oil condition
Good [ ] Fair [ ] Poor [ ]

[ ] Oil pump continuity test
Good [ ] Open [ ]

[ ] Oil pump motor ground check
Good [ ] Bad [ ]

[ ] Check motor terminals
[ ] Change oil filter

Condenser

[ ] Visually inspect for scaling in tubes:
note findings and make recommendations.

Control Circuits

[ ] Low temperature control calibration
___ F set point ___ F trip point (ice water)

[ ] High pressure control calibration
___ psig setpoint
___ psig trip point (oil-pumped dry nitrogen)

[ ] Oil pressure control calibration
___ psid cut-in
___ psig cut-out

[ ] Check adjustment and calibration of inlet guide vane actuator motor

Leak Test Chiller

Refrigerant and oil analysis for acid content.

[ ] Sample refrigerant and oil for laboratory analysis (attach copy of analysis to next monthly inspection report)

Purge Unit

[ ] Check purge unit/controls for proper operation.
[ ] Check moisture indicator, replace filter-drier cores as necessary.
[ ] Check purge tank sump for water, remove free water as necessary.
[ ] Inspect/clean air-cooled condenser coil as necessary.

Cover Logs/Logging System with Operator

[ ] Review proper logging procedures with operator.

Comments: _____

_____

_____

Recommendations: _____

_____

Important: This check list is intended for use by qualified Trane service organizations ONLY. It is not a part of the maintenance oprations performed by the CVHE owner/operator.

federal, state and local regulations with regard to disposal of the filter.

Note: If the unit is under positive pressure, the entering and leaving lines at the oil filter must be disconnected. Be sure to plug the open end of each line with a flare fitting plug to reduce refrigerant loss during the filter change-out procedure.

Other Maintenance Requirements

[ ] Inspect the condenser tubes for fouling; clean if necessary.

[ ] Measure the compressor motor winding resistance to ground; a Qualified service technician should conduct this check to ensure that the findings are properly interpreted.

Contact a qualified service organization to leak-test the chiller; this procedure is especially important if the system requires frequent purging.

[ ] Use a nondestructive tube test to inspect the condenser and evaporator tubes at 3-year intervals.

Note: It may be desirable to perform tube tests on these components at more frequent intervals, depending upon chiller application. This is especially true of critical process equipment.

[ ] Depending on chiller duty, contact a qualified service organization to determine when to conduct a complete examination of the unit to discern the condition of the compressor and internal components.

a. chronic air leaks, which can cause acidic conditions in the compressor oil and result in premature bearing wear; and,

b. evaporator or condenser water tube leaks. Water mixed with the compressor oil can result in bearing pitting, corrosion, or excessive wear.

[ ] Submit a sample of the compressor oil to a Trane qualified laboratory for comprehensive analysis on an annual basis; this analysis determines system moisture content, acid level and wear metal content of the oil, and can be used as a diagnostic tool.

Lubrication

The only CVHE/CVHF chiller component that requires periodic lubrication is the external vane linkage assembly.

Lubricate the vane linkage shaft bearings and rod end bearings with a few drops of light-weight machine oil.

Refrigerant Charge

WARNING: To avoid injury or death due to inhalation of, or skin exposure to refrigerant, closely follow all safety procedures described in the Material Safety Data Sheet for the refrigerant containers. Certain procedures common to refrigeration system service may expose operating and/or servicing personnel to liquid and/or vaporous refrigerant.

The refrigerant charging procedure for Trane centrifugal chillers is:

1. If water is present in the tubes, break machine vacuum with refrigerant vapor, or circulate water, to avoid tube damage.

2. Always use refrigerant-compatible hoses or copper-tubing with self-sealing connections or shut-off valves.

3. Transfer the refrigerant using one of the following (listed in order of preference):

a. An approved Trane low-pressure refrigerant recovery/recycle unit.

b. The available pressure differential.

c. Gravity. (Use a return vent line to refrigerant drums to equalize pressure.)

d. A mechanical gear pump with compatible seals, or a magnetically-driven pump.

4. When charging from new drums, use fitting designed for use with 3/4-inch center drum bung of 2-inch bung.

5. Do not use dry nitrogen to push refrigerant into the chiller as was common practice in the past. This will contaminate the charge require excessive purging, which will result in unnecessary release of refrigerant.

6. Weigh in the proper charge.

7. Use recovery/recycle unit or vacuum pump to evacuate hoses; discharge outdoors.

Recovery/Recycle Connections

To facilitate refrigerant removal and replacement, newer-design CVHE and CVHF units are provided with a 3/4-inch vapor fitting with shutoff valve on the chiller suction and with a 3/4-inch liquid connection with shutoff valve at the bottom of the evaporator shell.

Recovery/Recycle Connections

To facilitate refrigerant removal and replacement, newer-design CVHE and CVHF units are provided with a 3/4-inch vapor fitting with shutoff valve on the chiller suction and with a 3/4-inch liquid connection with shutoff valve at the bottom of the evaporator shell.

Leak Testing

To leak-test a chiller containing full refrigerant charge, raise chiller pressure using a controlled hot water or electric-resistance system to a maximum of 8 psig. Do not use nitrogen, which will cause excessive refrigerant discharge by the purge system.

Figure 25
Trane-Designed Drum Bung Fitting w/Quick-Connect Coupling

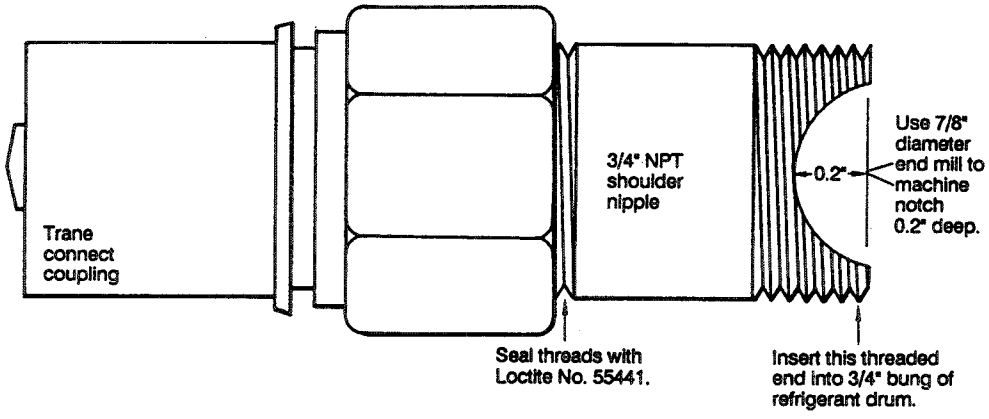

Periodic Maintenance

Cleaning the Condenser

CAUTION: Do not use untreated or improperly treated water, or equipment damage may occur.

Condenser tube fouling is indicated when "the approach" temperature (i.e., the difference between the refrigerant condensing temperature and the leaving water temperature) is higher than predicted.

If the annual condenser tube inspection indicates that the tubes are fouled, 2 cleaning methods mechanical and chemical can be used to rid the tubes of contaminants.

Use the mechanical cleaning method to remove sludge and loose material from smooth- bore tubes.

(To clean other types of tubes including internally-enhanced types, consult a qualified service organization for recommendations.)

1. Remove the retaining nuts and bolts from the water box covers at each end of the condenser. Use a hoist to lift the covers off the water box (A threaded connection is provided on each water box cover to allow insertion of an eyebolt.)

2. Work a round nylon or brass bristled brush (attached to a rod) in and out of each of the condenser water tubes to loosen the sludge.

3. Thoroughly flush the condenser water tubes with clean water.

Scale deposits are best removed by chemical means. Be sure to consult any qualified chemical house in the area (i.e., one familiar with the local water supply's chemical/mineral content) for a recommended cleaning solution suitable for the job. (Remember a standard condenser water circuit is composed solely of copper, cast iron and steel.)

A typical chemical cleaning setup is illustrated in Figure 26.

Figure 26
Typical Chemical Cleaning Setup

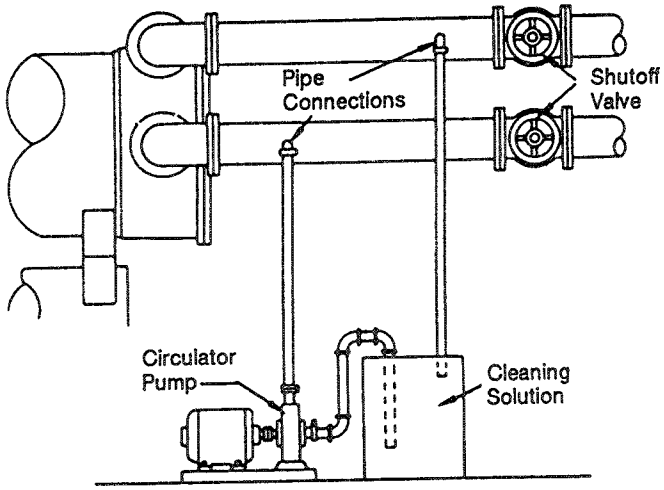

CAUTION: Improper chemical cleaning can damage tube walls.

CAUTION: All of the materials used in the external circulation system, the quantity of the solution, the duration of the cleaning period, and any required safety precautions should be approved by the company furnishing the materials or performing the cleaning.

Remember, however, that whenever the chemical tube cleaning method is used, it must be followed up with mechanical tube cleaning, flushing and inspection.

Cleaning the Evaporator

Since the evaporator is typically part of a closed circuit, it does not accumulate appreciable amounts of scale or sludge. Normally every 3 years is sufficient. However on open CVHE/CVHF systems such as air washers periodic inspection and cleaning is recommended.

Control Settings And Adjustments

A list of CVHE/CVHF time delays and safety control cutout settings is provided in Table 1 in the Chiller Control System section of this manual. For control calibration and check-out, contact a Trane qualified service organization.

Purge System

Because some sections of the chiller's-refrigeration system operate at less-than-atmospheric pressure, the possibility exists that air and moisture may leak into the system. If allowed to accumulate, these non-condensibles become trapped in the condenser; this increases condensing pressure and compressor power requirements, and reduces the chiller's efficiency and cooling capacity.

The Trane Purifier Purge is the only purge system available for the CVHE/CVHF chiller. The purge is designed to remove non-condensible gasses and water from the refrigeration system. Purifier Purge unit operation, maintenance and troubleshooting is covered by a separate operation and maintenance manual (PRG-OM-4).

Trouble Analysis

Note: The troubleshooting charts in this manual are provided solely as a guide for determining the cause of a mechanical failure or equipment malfunction. when operational problems do occur, always contact a qualified service organization to ensure proper diagnosis and repair of the chiller.

UCP695 Control System

As described in the Chiller Control System section of this manual, the UCP-695 control panel visually indicates operating and diagnostic codes at the display window.

If the UCP detects a diagnostic condition, the display alternately flashes the unit operating mode (code prefix A) at the time the unit shut down and diagnostic code (code prefix b). Complete listings of the codes used to identify CVHE/CVHF operating modes and diagnostic conditions are provided in Tables 3 and 4. (See "Operator Interface: Display" in Chiller Control System.)

Organization of the UCP troubleshooting charts on the following pages is based on the possible 3-digit diagnostic codes that may appear on the display at one time or another.

Notice that each diagnostic code is classed by type ("latching" or "non-latching"); the condition that generated the diagnostic is then described briefly. Suggested actions for correcting the problem are provided under "Recommended Action".

Note: Remember that nonlatching diagnostics allow automatic restart as soon as the diagnostic condition clears, while latching diagnostics require a manual reset before unit operation can resume. The "Manual Reset Required" status indicator light illuminates whenever a latching diagnostic occurs.

UCP "Summary Sheet"

Immediately following the troubleshooting charts just described, is a 2-page owner/ operator guide to the UCP's micro module (1U3).

Use this summary sheet as a quick reference for identifying operating and diagnostic codes that appear on the UCP's display. Also included there are lists of the micro module's timing functions, run inhibit points, and inputs (including terminal connection designations).

Troubleshooting Charts

UCP-Generated Diagnostics

3-Digit Diagnostic Code	Type (1)	Diagnostic Description	Recommended Action
b A3	L	Evaporator Refrigerant Temperature Range	Check evaporator "trip" setting.
b A4	L	Motor Temperature Sensor #1 (4B1R2)	Check sensor connections.
b A5	L	Maximum Acceleration Time Range	Contact a qualified service organization.
b A7	L	Motor Temperature Sensor #2 (4B1R3)	Check sensor connections.
b A8	L	Motor Temperature Sensor #3 (4B1R4)	Check sensor connections.
b A9	L	Oil Temperature Sensor 4RT7	Check sensor connections.
b Ab	L	Leaving Water Temperature Sensor 4RT1	Check sensor connections.
b AC	L	Condenser Refrigerant Pressure Sensor 1R1 (optional)	Check sensor connections.
b Ad	L	Evaporator Refrigerant Temperature Sensor 4RT5 (optional)	Check sensor connections.
b AE	L	Ambient Temperature Sensor 4RT6 (optional)	Check sensor connections.
b AF	L	Inboard Bearing Temperature Sensor #1 (4RT8; optional)	Check sensor connections.
b b0	L	Outboard Bearing Temperature Sensor #2 (4RT9; optional)	Check sensor connections.
b d9	NL	Extended Power Loss	None. Power lost; unit restarted normally when power was restored.
b dA	L	Surge	Check for proper operating conditions (entering condenser water temperature, flow rate, etc.). Also check for air dirty tubes and air in condenser.
b dC	L	Condenser Water Flow Overdue	Check condenser water flow switch, valves and pump contactor.
b E2	NL	Momentary Power Loss	None. Power lost briefly; unit restarted normally when power was restored.
b E3	L	Phase Imbalance	Contact a qualified service organization.
b E4	L	Phase Loss	Contact a qualified service organization.
b E5	L	Phase Reversal	Contact a qualified service organization.
b E7	L	High Motor Temperature (4B1R2, 4B1R3 or 4B1R4)	Contact a qualified service organization.
b E8	L	Differential Oil Pressure Switch 1S2	Contact a qualified service organization.
b E9	L	Stop Relay 1U2K2	Contact a qualified service organization.

Notes: See conclusion of "Troubleshooting Charts: UCP-Generated Diagnostics" on next page.

UCP-Generated Diagnostics

3-Digit Diagnostic Code	Type (1)	Diagnostic Description	Recommended Action
b EA	L	High Inboard Bearing Temperature, Sensor #1 (4RT8)	Check for proper oil sump heater (and oil cooler on CVHE 360 thru 1250) operation.
b Eb	L	High Outboard Bearing Temperature, Sensor #2 (4RT9)	Check for proper oil sump heater operation.
b EC	L	Running Overload (1U2K3)	Contact a qualified service organization.
b Ed	NL	Chilled Water Flow	Check chilled water flow switch, valves and pump interlock.
b EE	L	Exceeded Maximum Acceleration Time	Contact a qualified service organization.
b F0	L	Transition	Contact a qualified service organization.
b F1 (4)	L	Running External Interlock (optional)	Identify and correct problem that triggered interlock.
b F2	L	Low Oil Pressure (1S2)	Check oil level in oil sump.
b F3 b F4	NL L	Low Oil Temperature (4RT7) High Oil Temperature (4RT7)	Check oil heater and sensors for proper operation.
b F5	L	High Condenser Refrigerant Pressure (1R1)	Check for proper operation. Also check for dirty tubes and air in condenser.
b F7	NL	Condenser Water Flow	Check condenser water flow switch valves and pump interlock circuit.
b F8	L	Improper Unit Identification	Contact a qualified service organization.
b F9	L	Free Cooling Valves (4B12, 4B13)	Contact a qualified service organization.
b FA	L	Actuator (4B2)	Contact a qualified service organization.
b Fb	L	Low Evaporator Refrigerant Temperature (4RT5)	Contact a qualified service organization.
b Fd	L	External Interlock (optional)	Identify and correct problem that triggered interlock.
b FF	L	Unit Control Module (1U3)	Contact a qualified service organization.

Notes:

1. Latching diagnostic conditions (L) require manual reset; "Manual Reset Required" status indicator light illuminates whenever a latching diagnostic condition occurs. Nonlatching diagnostic conditions (NL) do not require a manual reset; the unit automatically restarts as soon as the diagnostic condition clears.

2. Notice that the chiller will not start if the oil temperature is too low (<140 F); contact a qualified service organization for recommendations.

3. It is not possible to clear a latching diagnostic condition from a higher-level, supervisory control device (e.g., SCP699, Trane BAS or generic BAS).

4. HGBP only - bF1 is generated when condenser discharge temperature exceeds 210 F.

UCP Summary Sheet

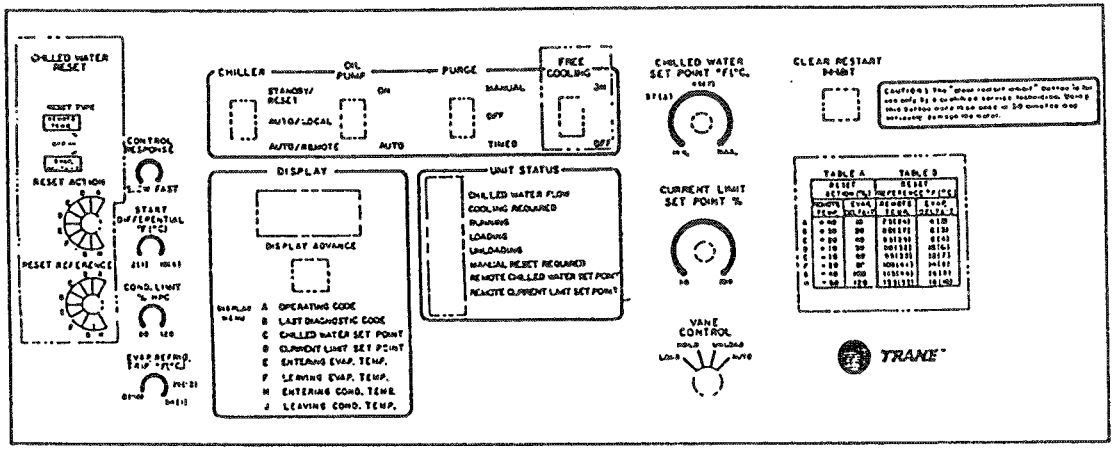

Terminal Block 1TB6 Input

Term. Nos.	Description of Input
1 2	Optional Bidirectional Communications Link

Unit Timers

Timer	Nom. Interval
Prelube*	15 seconds
Restart Inhibit (Standby--Auto): Winding Temp. <165 F (74 C) Winding Temp. ≥165 F (74 C) Since Last Start	 2 minutes 15 minutes 30 minutes
Post-Lube	2 minutes
Free-Cool/Vane Open Inhibit	3 minutes
Purge	5 minutes ON, 115 minutes OFF

*Since (a) "sufficient" oil pressure may be confirmed at any point during the 33-second "oil pressure overdue" timing interval, and (b) the 15-second "prelube" period begins only when sufficient oil pressure is sustained, the actual time required to "establish oil pressure" and "prelube" can be 15 to 48 seconds.

Terminal Block 1TB3 Inputs

Term. Nos.	Description of Input	Term. Nos.	Description of Input
1, 2	Leaving Evaporator Water Temperature	14, 15	Ambient Temp. (Opt.)
3, 4	Entering Evaporator Water Temperature (Opt.)	16, 17	External Interlock (Opt.)
5, 6	Leaving Condenser Water Temperature (Opt.)	18, 19	Free-Cool Valves Closed (Opt.)
7, 8	Entering Condenser Water Temperature (Opt.)	20, 21	Proof of Chilled Water Flow
9 10 11	Cond. Refrig. Pressure (POW) Cond. Refrig. Pressure (WIP) Cond. Refrig. Pressure (COM)	22, 23	Proof of Condenser Water Flow
12, 13	Evaporator Refrigerant Temperature	24, 25	Vanes Closed

Terminal Block 1TB4 Inputs

Term. Nos.	Description of Input	Term. Nos.	Description of Input
1, 2	Differential Oil Pressure	13, 14	Oil Temperature
3, 4	Running External Interlock (Opt.)	15 16 17	Winding Temperature #1 Winding Temperature #2 Common
5, 6	Transition Complete	18	Winding Temperature #3
7 8	Phase Current 3+ Phase Current 3-	19, 20	Bearing Temperature #1 (Opt.)
9 10	Phase Current 2+ Phase Current 2-	21, 22	Bearing Temperature #2 (Opt.)
11 12	Phase Current 1+ Phase Current 1-		

Nominal Fault Timeouts

Condition	Timing Interval
Oil Pressure Overdue*	33 seconds
Transition Completion Overdue	2 seconds
Condenser Water Flow Overdue	3 minutes
Vane Closure Overdue	3 minutes
Free-Cooling Valve Closure Overdue	3 minutes

*"Sufficient" oil pressure may be confirmed at any point during this 33-second period; prelube begins as soon as oil pressure is confirmed.

Predetermined Unit Cutout Points (Nominal)

Condition	Cutout Point
Winding Temperature Run Inhibit	130 C 265 F
Oil Temperature Run Inhibit	(82 C) 180 F
Bearing Temperature Run Inhibit	(82 C) 180 F
Leaving Chilled Water Temperature Low Limit	(2 C) 35.3 F, std. range only

UCP-Generated Diagnostics

3-Digit Code	Diagnostic Description	Diagnostic Type	System Reset
b A3	Evaporator Refrigerant Temp. Range	Latching	Manual
b A4	Motor Temperature Sensor #1	Latching	Manual
b A5	Maximum Acceleration Time Range	Latching	Manual
b A7	Motor Temperature Sensor #2	Latching	Manual
b A8	Motor Temperature Sensor #3	Latching	Manual
b A9	Oil Temperature Sensor	Latching	Manual
b Ab	Leaving Water Temperature Sensor	Latching	Manual
b AC	Condenser Refrig. Pressure Sensor (Opt.)	Latching	Manual
b Ad	Evaporator Refrig. Temp. Sensor (Opt.)	Latching	Manual
b AE	Ambient Temperature Sensor (Opt.)	Latching	Manual
b AF	Inboard Bearing Temp. Sensor #1 (Opt.)	Latching	Manual
b b0	Outboard Bearing Temp. Sensor #2 (Opt.)	Latching	Manual
b d9	Extended Power Loss	Nonlatching	Automatic
b dA	Surge	Latching	Manual
b dC	Condenser Water Flow Overdue	Latching	Manual
b E2	Momentary Power Loss	Nonlatching	Automatic
b E3	Phase Imbalance	Latching	Manual
b E4	Phase Loss	Latching	Manual
b E5	Phase Reversal	Latching	Manual
b E7	High Motor Temperature	Latching	Manual
b E8	Differential Oil Pressure Switch	Latching	Manual
b E9	Stop Relay	Latching	Manual
b EA	High Inboard Bearing Temp. (Sensor #1)	Latching	Manual
b Eb	High Outboard Bearing Temp. (Sensor #2)	Latching	Manual
b EC	Running Overload	Latching	Manual
b Ed	Chilled Water Flow	Nonlatching	Automatic
b EE	Exceeded Maximum Acceleration Time	Latching	Manual
b F0	Transition	Latching	Manual
b F1	Running External Interlock (Opt.)	Latching	Manual
b F2	Low Oil Pressure	Latching	Manual
b F3	Low Oil Temperature	Nonlatching	Manual
b F4	High Oil Temperature	Latching	Manual
b F5	High Condenser Refrigerant Pressure	Latching	Manual
b F7	Condenser Water Flow	Nonlatching	Automatic
b F8	Improper Unit Identification	Latching	Manual
b F9	Free-Cooling Valves	Latching	Manual
b FA	Actuator	Latching	Manual
b Fb	Low Evaporator Refrigerant Temperature	Latching	Manual
b Fd	External Interlock (Opt.)	Latching	Manual
b FF	Unit Control Module	Latching	Manual

Note: It is not possible to clear a "latching" unit diagnostic condition from a higher-level, supervisory control device (e.g., SCP699 system control panel, Trane BAS, etc.).

Display Menus

Operator's Menu		Serviceman's Menu (1, 3) (Vane control switch set at "Hold")	
Code Prefix	Parameter Description Description	Code Prefix	Parameter Description (and Display Range)
A	Operating Mode (see Table 3)	A	Operating Mode (see Table 3)
b	Last Diagnostic (see Table 4)	b	Last Diagnostic (see Table 4)
C	Active Chilled Water Setpoint: Std. Range = 37 F thru 60 F (3 C thru 16 C); Extd. Range = 20 F thru 70 F (-6 C thru 22 C)	|-	Panel Chilled Water Setpoint (---, 20 F thru 70 F, ---) (---, -6 C thru 22 C, ---)
d	Active Current Limit Setpoint (40% thru 100% RLA)	-	Panel Current Limit Setpoint (---, 40% thru 100% RLA, ---)
E	Entering Evaporator Water Temperature (Opt.) (---, 12 F thru 91 F, ---) (---, -11 C thru 33 C, ---)	—	Evaporator Refrigerant Temperature (2) (b Ad, -4 F thru 42 F, ---) (b Ad, -20 C thru 6 C, ---)
F	Leaving Evap. Water Temp. (b Ab, 12 F thru 91 F, ---) (b Ab, -11 C thru 33 C, ---)	|_	Control Response Setpoint (1 thru 237)
H	Ent. Cond. Water Temp. (Opt.) (---, 28 F thru 142 F, ---) (---, -2 C thru 62 C, ---)	| |	Start Differential Setpoint (2 F thru 10 F) (-17 C thru -12 C)
J	LVG. Cond. Water Temp. (Opt.) (---, 28 F thru 142 F, ---) (---, -2 C thru 62 C, ---)	|-	Condenser Limit Setpoint (80% thru 120% HPC)
L	Multi-Use Temperature (4) (---, -5-135 F, ---)	|_|	Evaporator Refrigerant "Trip" Setpoint (b A3) Std. Range = 29 F thru 34 F (-1 C thru 1 C) Extd. Range = 0 F thru 34 F (-18 C thru 1 C)

Notes:
1. To redefine the "operator's menu" to the "serviceman's menu" turn vane control switch to HOLD. 2. For additional information on any item listed in the "serviceman's menu", contact a qualified service organization. 3. Actual measured evaporator refrigerant temperature. 4. Examples of "Multi-Use Temp." applications are: Cond. Lvg. Refg. Temp.; CWR Ambient Temp.; CWR Temp. from Analog Input.

Codes for Operating Modes

3-Digit Code	Operating Mode Description
Blank	Power Off
A 0	Standby/Reset
A 1	Auto
A 9	Free Cooling
A 70	Restart Inhibit
A 71	Establish Cond. Water Flow
A 72	Start
A 74	Run: Normal
A 75	Run: Current Limit
A 76	Run: Condenser Limit
A 77	Run: Evaporator Limit
A 78	Run: Surge Condition
A 79	Post-Lube
A 88	Reset

TRANE

Wiring CVHE-W-3

Library	Service Literature
Product Section	Refrigeration
Product	Cent Liq Chllr, W/C
Model	CVHE, Clg-Only & Heat-Rcvy
Literature Type	Wiring
Sequence	3
Date	February 1986
File No.	SV-RF-CTV-CVHE-W-3-286
Supersedes	

Centrifugal Liquid Chiller

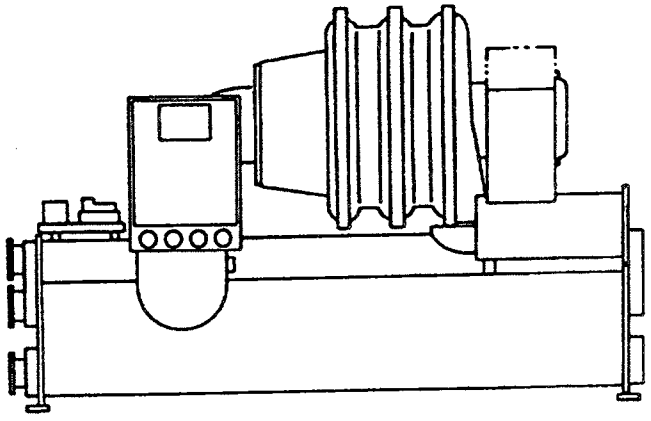

RF/CTV-1625

Models
CVHE 013 thru CVHE 125,
"K"-Design Sequence

Cooling-Only and Heat-Recovery Direct-Drive
CenTraVacs with UCP695 Control Panels

Since The Trane Company has a policy of continuous product improvement, it reserves the right to change specifications and design without notice. The installation and servicing of the equipment referred to in this booklet should be done by qualified, experienced technicians.

Table of Contents

3 **Model Number Description**

7 **General Information**
7 Literature Change History
7 Compressor Motor Electrical Data

8 **Field Connection Diagrams**
8 Figure 1: CVHE w/Unit-Mounted Starter Option
10 Figure 2: CVHE w/Remote-Mounted Starter

12 **Electrical Schematics**
12 Figure 3: Standard CVHE w/Y-Delta, Unit-Mounted Starter
16 Figure 4: Standard CVHE w/Remote Y-Delta Starter
20 Figure 5: CVHE w/Hot Gas Bypass and Y-Delta, Unit-Mounted Starter
24 Figure 6: CVHE w/Hot Gas Bypass and Typical, Remote Y-Delta Starter
28 Figure 7: CVHE w/Free Cooling and Y-Delta, Unit-Mounted Starter
32 Figure 8: CVHE w/Free Cooling and Typical, Remote Y-Delta Starter

36 **Connection Diagrams**
36 Figure 9: Standard CVHE Chiller Connections
38 Figure 10: Standard CVHE Chiller Control Panel Connections
39 Figure 11: Control Panel Connections for CVHE Chillers w/Hot Gas Bypass
40 Figure 12: Connections for CVHE Chillers w/Hot Gas Bypass
42 Figure 13: Connections for CVHE Chillers w/Free Cooling
44 Figure 14: Connections for Starter w/Micro Control

Model Number Description

All standard Trane products are identified by a multiple-character model number that precisely identifies a particular type of unit. An explanation of the alphanumeric identification code used with CenTraVac units is provided on the next three pages. Its use will enable the owner/operator, installing contractor(s), and service engineer(s) to define the operation, components and options for a particular unit.

Be sure to refer to the model number stamped on the unit nameplate (shown below, and mounted on the left-hand side of the unit control panel enclosure) when ordering replacement parts or requesting service.

Note: Trane-built, unit-mounted starters are identified by a separate number found on the starter.

Typical CVHE Unit Nameplate

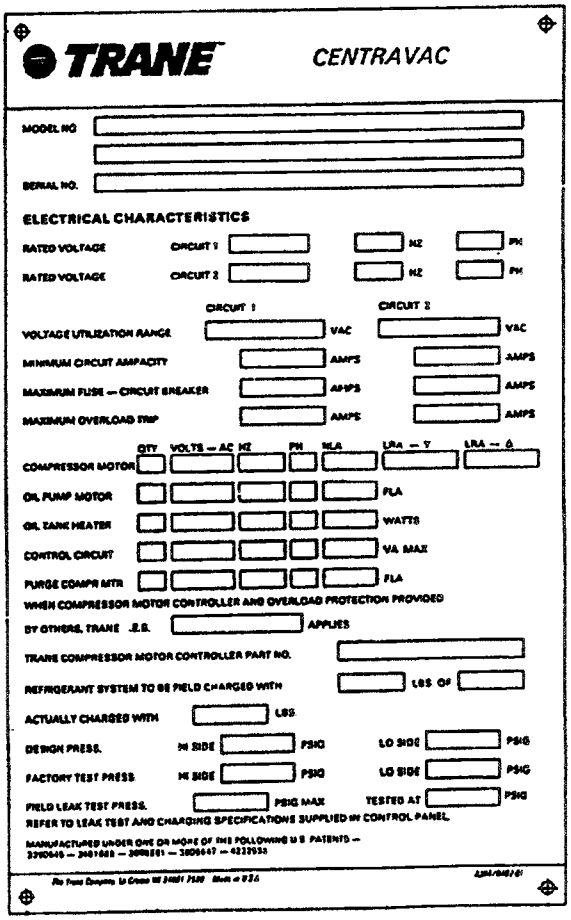

Drwg. X39470402

Trane products are identified by a multiple character model number that precisely identifies a particular type of unit. An explanation of the alphanumeric model number is shown below. It will enable the owner or Service Engineer to define operation, components and accessories.

Model No.	CV	H	E	-	014	A	-	A	K	4	A	B	235	5	C	E	A	(continued)
Digit No.	1,2	3	4		5,6,7	8		9	10	11	12	13	14,15,16	17	18	19	20	

Digits 1, 2
CenTraVac

Digit 3
Direct-Drive

Digit 4
Development Sequence

Digits 5, 6, 7
Compressor Designators (Unit Capacity)

013	036	089
014	040	090
016	045	100
018	050	112
020		125
	056	SSS
023	063	
025	071	
028	080	
032		

Digit 8
Nominal Voltage

A = 200/60/3
B = 208/60/3
C = 230/60/3
D = 380/60/3
E = 440/60/3
F = 460/60/3
G = 480/60/3
H = 575/60/3
J = 600/60/3
K = 2300/60/3
L = 2400/60/3
M = 4000/60/3
N = 4160/60/3
S = Special

Digit 9
Unit Type

A = Hermetic, Std.
B = Hermetic w/Heat-Recovery
C = Hermetic w/Aux. Condenser
D = Hermetic w/Free-Cooling
S = Special

Digit 10
Design Sequence

Digit 11
Economizer and Hot Gas Bypass

2 = Std. Economizer
4 = Std. Economizer w/HGBP
S = Special

Digit 12
Compressor Motor Kw

A = 96	N = 323
B = 105	P = 361
C = 118	R = 403
D = 131	T = 453
E = 142	U = 513
F = 155	V = 586
G = 172	W = 653
H = 184	X = 742
J = 204	Y = 853
K = 230	Z = 954
L = 256	S = Special
M = 284	

Digit 13
Compressor Motor Vendor

Digits 14, 15, 16
Impeller Cutback Diameter

235 = 23.50	260 = 26.00
240 = 24.00	265 = 26.50
245 = 24.50	270 = 27.00
250 = 25.00	275 = 27.50
255 = 25.50	SSS = Special

Digit 17
Evaporator Bundle Size

See price sheet for possible sizes.

Digit 18
Evaporator Length

C = Short
D = Long
S = Special

Digit 19
Evaporator Tube Specifications

A = 0.028 Cu (Smooth-Bore)
B = 0.035 Cu (Smooth-Bore)
E = 0.028 Cu (IE)
M = 0.035 Cu/Ni; 90/10 (Smooth-Bore)
S = Special

Digit 20
Evaporator Water Pass Arrangement

See price sheet for possible arrangements.

See next page for continuation of CVHE model number description (i.e., Digits 21 through 36).

Model Number	A	1	5	C	A	1	A	0	0	0	0	0	0	0	0	5	
Digit Number	21	22	23	24	25	26	27	28	29	30	31	32	33	34	35	36	(continued)

Digit 21
Evap. Working Pressure (Water Side)
A = Flanged; 150 psig
B = Flanged; 300 psig
C = Victaulic; 150 psig
D = Victaulic; 300 psig
E = Flanged; 150 psig (ASME)
F = Victaulic; 150 psig (ASME)
S = Special

Digit 22
Condenser Construction (Refrigerant Side)
1 = Standard
2 = ASME
S = Special

Digit 23
Condenser (Cooling) Bundle Size
See price sheet for possible sizes.

Digit 24
Condenser (Cooling) Length
C = Short
D = Long
S = Special

Digit 25
Condenser (Cooling) Tube Specifications
See price sheet for possible variations.

Digit 26
Condenser (Cooling) Water Pass Arrangement
See price sheet for possible arrangements.

Digit 27
Cond. (Cooling) Working Pressure (Water Side)
See variations for Digit 21.

Digit 28
Condenser (Heating) Bundle Size
See price sheet for possible sizes.

Digit 29
Condenser (Heating) Length
0 = None
C = Short
D = Long
S = Special

Digit 30
Condenser (Heating) Tube Specifications
See price sheet for tube specifications.

Digit 31
Condenser (Heating) Water Pass Arrangement
See price sheet for possible arrangements.

Digit 32
Condenser (Heating) Working Pressure
0 = None
Also, see variations for Digit 21.

Digit 33
Auxiliary Condenser Size (Tube and Bundle)
See price sheet for available sizes.

Digit 34
Auxiliary Condenser Water Pass Arrangement
See price sheet for possible arrangements.

Digit 35
Auxiliary Cond. Working Pressure (Water Side)
0 = None
Also, see variations for Digit 21.

Digit 36
Orifice*
1 = 4 Sizes Under
2 = 3 Sizes Under
3 = 2 Sizes Under
4 = 1 Size Under
5 = Nom. Size Orifice
6 = 1 Size Over
7 = 2 Sizes Over
S = Special
*CVHE computer selection program includes proper orifice designator.

See next page for conclusion of model number description (i.e., Digits 37 through 41).

Model Number
Digit Number

1	T	2	Y	0
37	38	39	40	41

Digit 37
Insulation and Shipping
1 = Insulation; Domestic Shipping
2 = Domestic Shipping; No Insulation
3 = Insulation; Export Shipping
4 = Export Shipping; No Insulation

Digit 38
Control Panel
T = Micro Control
U = Micro Control w/Chilled Water Reset (CWR)
W = Micro Control w/Serial Communication Interface (SCI)
X = Micro Control w/Relay Package
Y = Micro Control w/CWR and Relay Package
Z = Micro Control w/SCI and Relay Package

Digit 39
Unit-Mounted Starter
0 = w/o Unit-Mounted Starter
2 = w/Unit-Mounted Starter

Note: Remote-mounted starters are available as a direct-ship item.

Digit 40
Starter Options
0 = None
A = Terminals
D = Terminals; Ammeter Voltmeter
E = Circuit Breaker
H = Circuit Breaker; Ammeter; Voltmeter
M = Hi-Int. Circuit Breaker; Ammeter; Voltmeter
T = Circuit Breaker; Ground Fault Protection; Ammeter; Voltmeter
Y = Hi-Int. Circuit Breaker; Ground Fault Protection; Ammeter; Voltmeter

Digit 41
Agency Approval
0 = None
1 = CSA
2 = UL

General Information

Literature Change History

CVHE-W-3 (February 1986)
Original issue of manual; provides typical field connection diagrams, electrical schematics and connection diagrams for CVHE units of "K" design with UCP695, microprocessor-based control systems.

Note: The typical wiring diagrams in this booklet are representative of "K"-design chillers, and are provided only for general reference; **it is possible that none of these diagrams exactly reflects the actual wiring of your unit.** For specific electrical connection and schematic information, always refer to the wiring diagrams that shipped with the unit.

Unit Electrical Data

To determine the specific electrical characteristics of a particular chiller, always refer to the unit nameplate (i.e., mounted on the left-hand side of the unit control panel). The nameplate (shown in "Model Number Description") provides electrical data for the compressor motor, oil pump motor, oil tank heater, and purge compressor motor.

For your reference, a summary of compressor motor electrical data is published in the installation manual that shipped with the unit.

Figure 1
Field Connections for CVHEs w/Unit-Mounted Starters

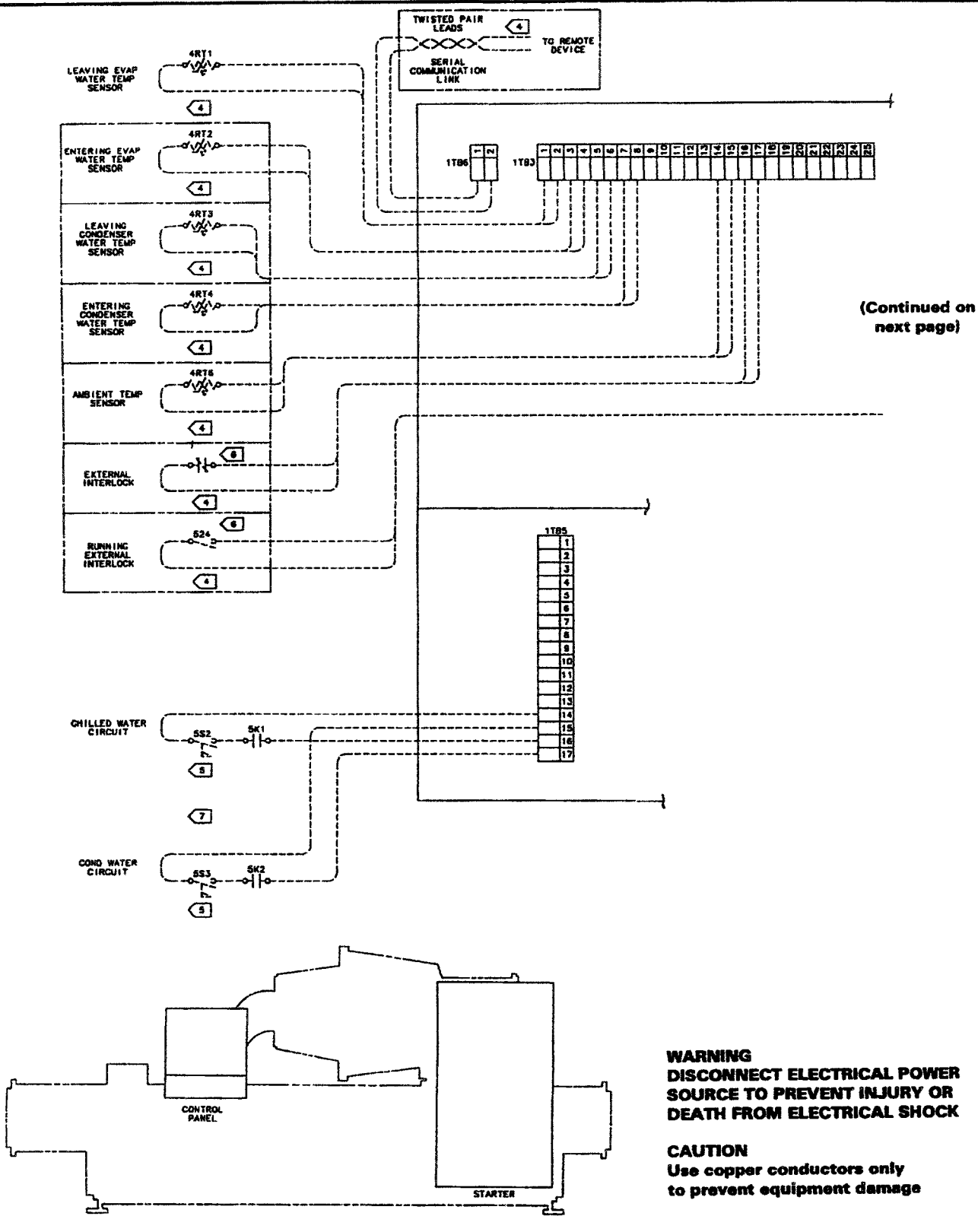

(Continued on next page)

WARNING
DISCONNECT ELECTRICAL POWER SOURCE TO PREVENT INJURY OR DEATH FROM ELECTRICAL SHOCK

CAUTION
Use copper conductors only to prevent equipment damage

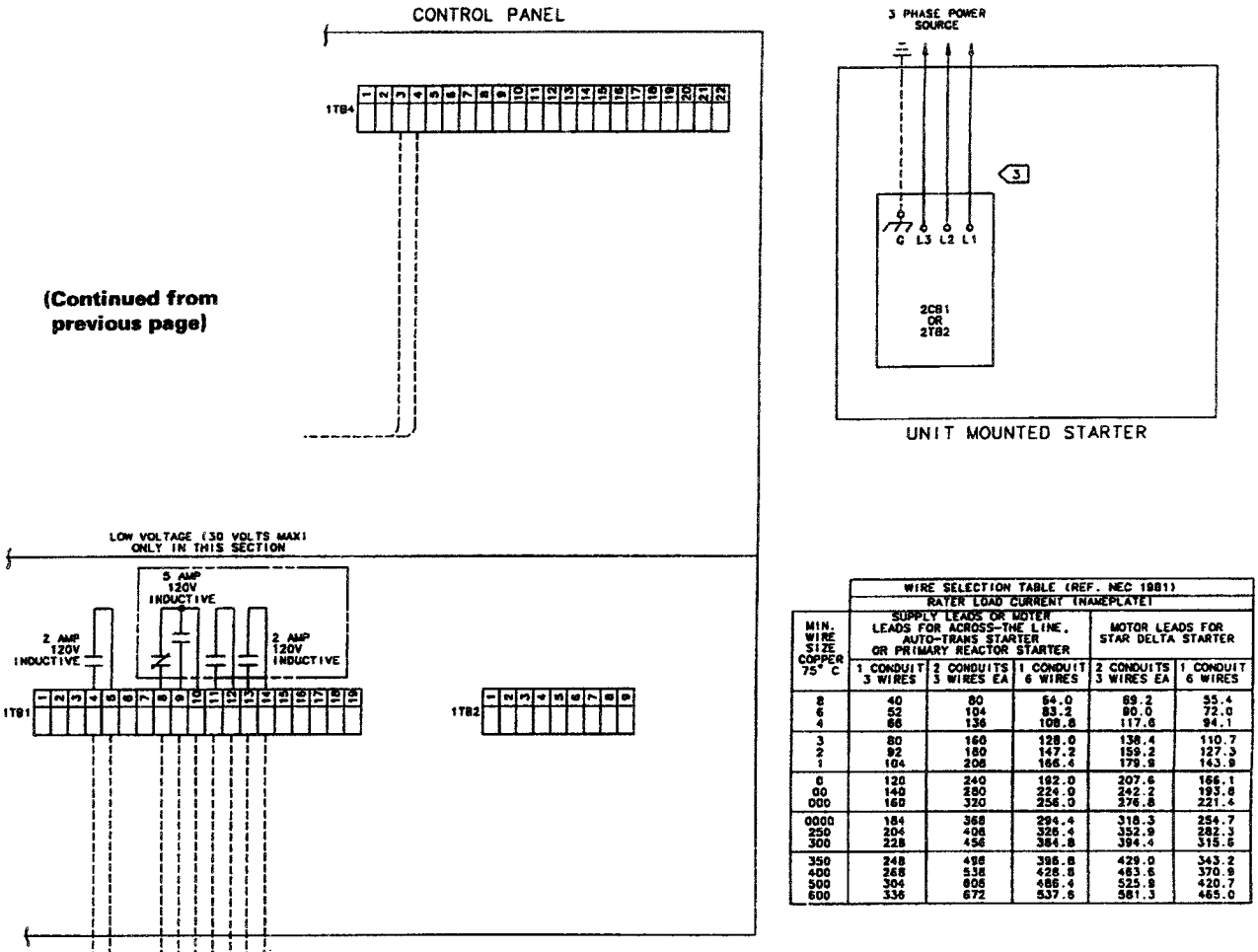

MIN. WIRE SIZE COPPER 75° C	WIRE SELECTION TABLE (REF. NEC 1981) RATED LOAD CURRENT (NAMEPLATE)				
	SUPPLY LEADS OR MOTOR LEADS FOR ACROSS-THE LINE, AUTO-TRANS STARTER OR PRIMARY REACTOR STARTER			MOTOR LEADS FOR STAR DELTA STARTER	
	1 CONDUIT 3 WIRES	2 CONDUITS 3 WIRES EA	1 CONDUIT 6 WIRES	2 CONDUITS 3 WIRES EA	1 CONDUIT 6 WIRES
8	40	80	64.0	69.2	55.4
6	52	104	83.2	90.0	72.0
4	66	136	108.8	117.6	94.1
3	80	160	128.0	138.4	110.7
2	92	180	147.2	159.2	127.3
1	104	208	166.4	179.9	143.9
0	120	240	192.0	207.6	166.1
00	140	280	224.0	242.2	193.8
000	160	320	256.0	276.8	221.4
0000	184	368	294.4	318.3	254.7
250	204	408	326.4	352.9	282.3
300	228	456	364.8	394.4	315.5
350	248	496	396.8	429.0	343.2
400	268	536	428.8	463.6	370.9
500	304	608	486.4	525.9	420.7
600	336	672	537.6	581.3	465.0

WIRING REQUIREMENTS:

1. DASHED LINES INDICATE RECOMMENDED FIELD WIRING BY OTHERS. PHANTOM LINES INDICATE ALTERNATE CIRCUITRY OR AVAILABLE SALES OPTION.
2. ALL FIELD WIRING MUST BE IN ACCORDANCE WITH THE NATIONAL ELECTRICAL CODE (NEC). STATE AND LOCAL REQUIREMENTS. OTHER COUNTRIES APPLICABLE NATIONAL AND/OR LOCAL REQUIREMENTS SHALL APPLY.

<3> COPPER WIRE, SIZED PER NEC, BASED ON UNIT NAMEPLATE RLA PLUS TRANSFORMER LOAD IN L1 & L2. PHASING OF 3 PHASE INPUT: L1 TO A, L2 TO B, L3 TO C WHERE ABC REPRESENTS STANDARD PHASE ROTATION. SEE TABLE.

<4> 30V OR LESS 14-18 AWG 600V WIRE, RUN IN SEPERATE CONDUIT.

<5> 120V AC, 14 AWG 600V WIRE.

<6> CUSTOMER SUPPLIED CONTACTS MUST BE COMPATABLE WITH DRY CIRCUIT GOLD PLATED CONTACTS RECOMMENDED.

<7> RECOMMENDED CIRCUIT; COMPONENTS SUPPLIED BY OTHERS. 5K1 & 5K2 ARE AUX CONTACTS ON PUMP STARTERS; 5S2 & 5S3 ARE FLOW SWITCHES IN APPROPIARE WATER CIRCUITS.

Drwg. X39470408A

Figure 2
Field Connections for CVHEs w/Remote-Mounted Starters

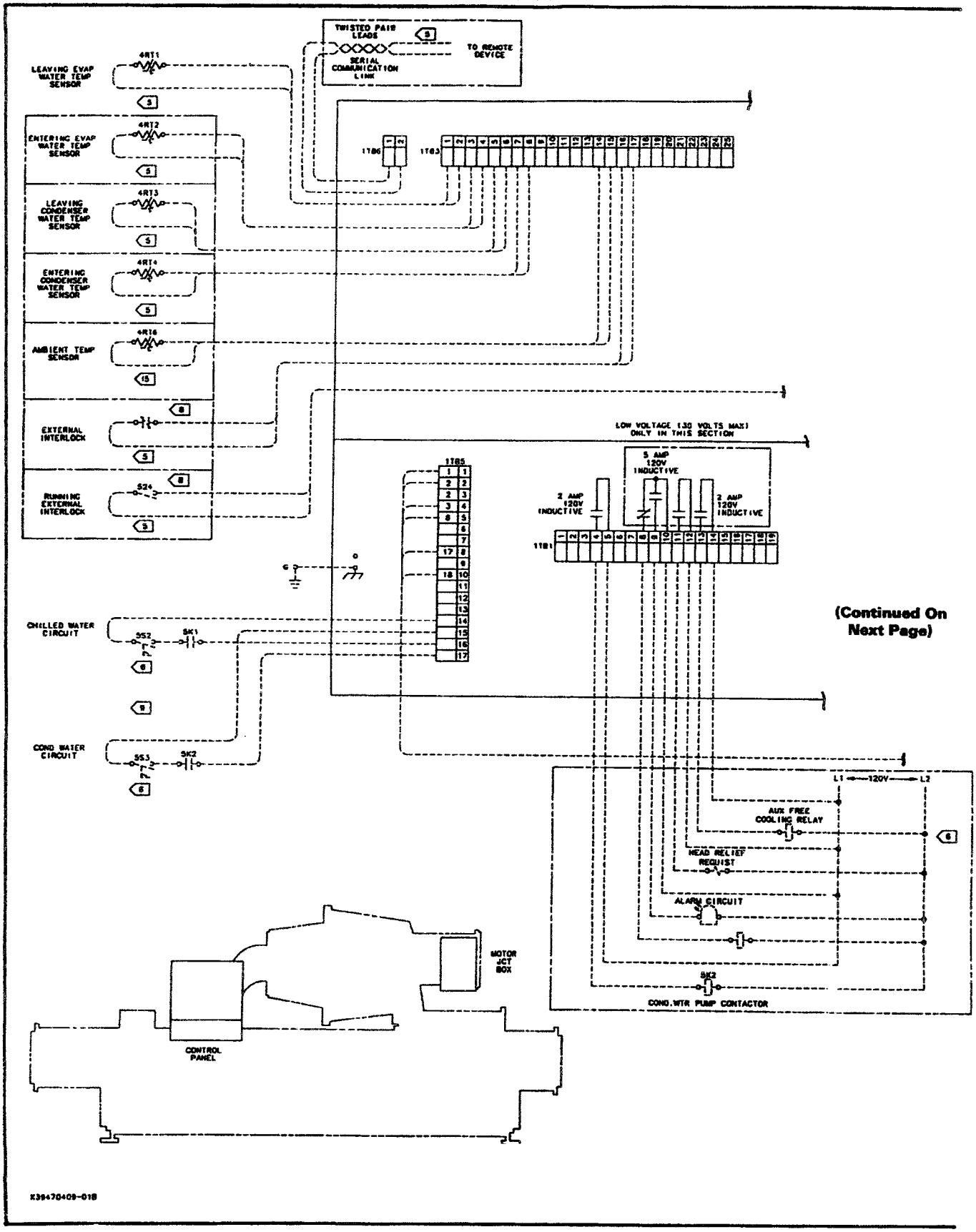

WIRING REQUIREMENTS:

1. DASHED LINES INDICATE RECOMMENDED FIELD WIRING BY OTHERS. PHANTOM LINES INDICATE ALTERNATE CIRCUITRY OR AVAILABLE SALES OPTION.
2. ALL FIELD WIRING MUST BE IN ACCORDANCE WITH THE NATIONAL ELECTRICAL CODE (NEC), STATE AND LOCAL REQUIREMENTS. OTHER COUNTRIES APPLICABLE NATIONAL AND/OR LOCAL REQUIREMENTS SHALL APPLY.
3. COPPER WIRE, SIZED PER NEC, BASED ON UNIT NAMEPLATE RLA PLUS TRANSFORMER LOAD IN L1 & L2. PHASING OF 3 PHASE INPUT: L1 TO A, L2 TO B, L3 TO C WHERE ABC REPRESENTS STANDARD PHASE ROTATION. SEE TABLE.
4. CU WIRE ONLY, SIZED PER NEC, BASED ON NAMEPLATE RLA, SEE TABLE.
5. 30V OR LESS 14-18 AWG 600V WIRE, RUN IN SEPERATE CONDUIT
6. 120V AC, 14 AWG 600V WIRE.
7. 120V AC, 10 AWG 600V WIRE.
8. CUSTOMER SUPPLIED CONTACTS MUST BE COMPATABLE WITH DRY CIRCUIT. GOLD PLATED CONTACTS RECOMMENDED.
9. RECOMMENDED CIRCUIT: COMPONENTS SUPPLIED BY OTHERS. 5K1 & 5K2 ARE AUX CONTACTS ON PUMP STARTERS; 5S2 & 5S3 ARE FLOW SWITCHES IN APPROPRIATE WATER CIRCUITS.

	WIRE SELECTION TABLE (REF. NEC 1981)				
	RATED LOAD CURRENT (NAMEPLATE)				
MIN. WIRE SIZE COPPER 75° C	SUPPLY LEADS OR MOTOR LEADS FOR ACROSS-THE-LINE, AUTO-TRANS STARTER OR PRIMARY REACTOR STARTER			MOTOR LEADS FOR STAR DELTA STARTER	
	1 CONDUIT 3 WIRES	2 CONDUITS 3 WIRES EA	1 CONDUIT 6 WIRES	2 CONDUITS 3 WIRES EA	1 CONDUIT 6 WIRES
8	40	80	64.0	69.2	55.4
6	52	104	83.2	90.0	72.0
4	68	136	108.8	117.6	94.1
3	80	160	128.0	138.4	110.7
2	92	180	147.2	159.2	127.3
1	104	208	166.4	178.9	143.9
0	120	240	192.0	207.6	166.1
00	140	280	224.0	242.2	193.8
000	160	320	256.0	276.8	221.4
0000	184	368	294.4	318.3	254.7
250	204	408	326.4	352.9	282.3
300	228	456	364.8	394.4	315.6
350	248	496	396.8	429.0	343.2
400	268	536	428.8	463.6	370.9
500	304	608	486.4	525.9	420.7
600	336	672	537.6	581.3	465.0

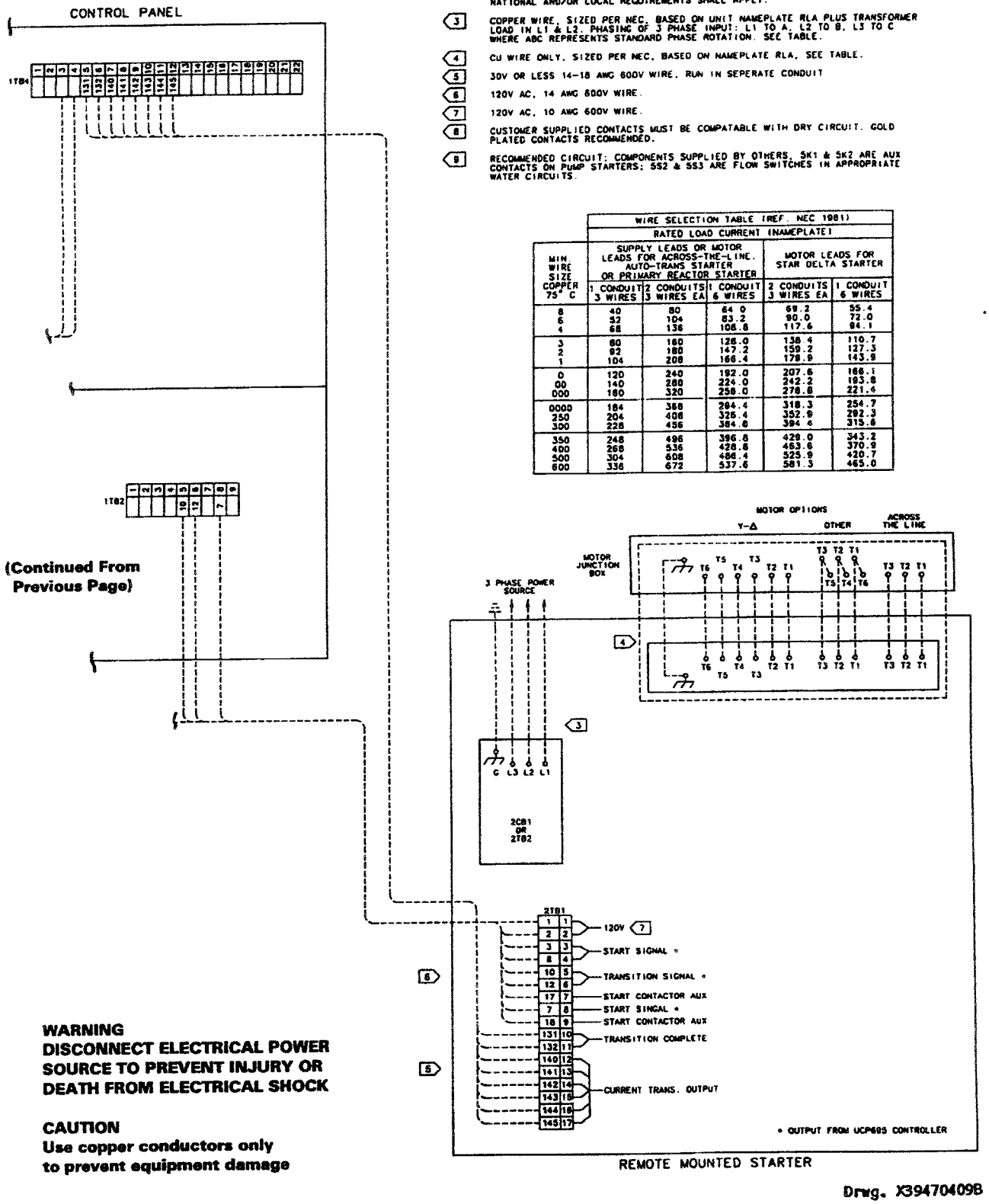

REMOTE MOUNTED STARTER

WARNING
DISCONNECT ELECTRICAL POWER SOURCE TO PREVENT INJURY OR DEATH FROM ELECTRICAL SHOCK

CAUTION
Use copper conductors only to prevent equipment damage

Drwg. X394704098

Figure 3
Electrical Schematic for Standard CVHEs w/Y-Delta, Unit-Mounted Starters

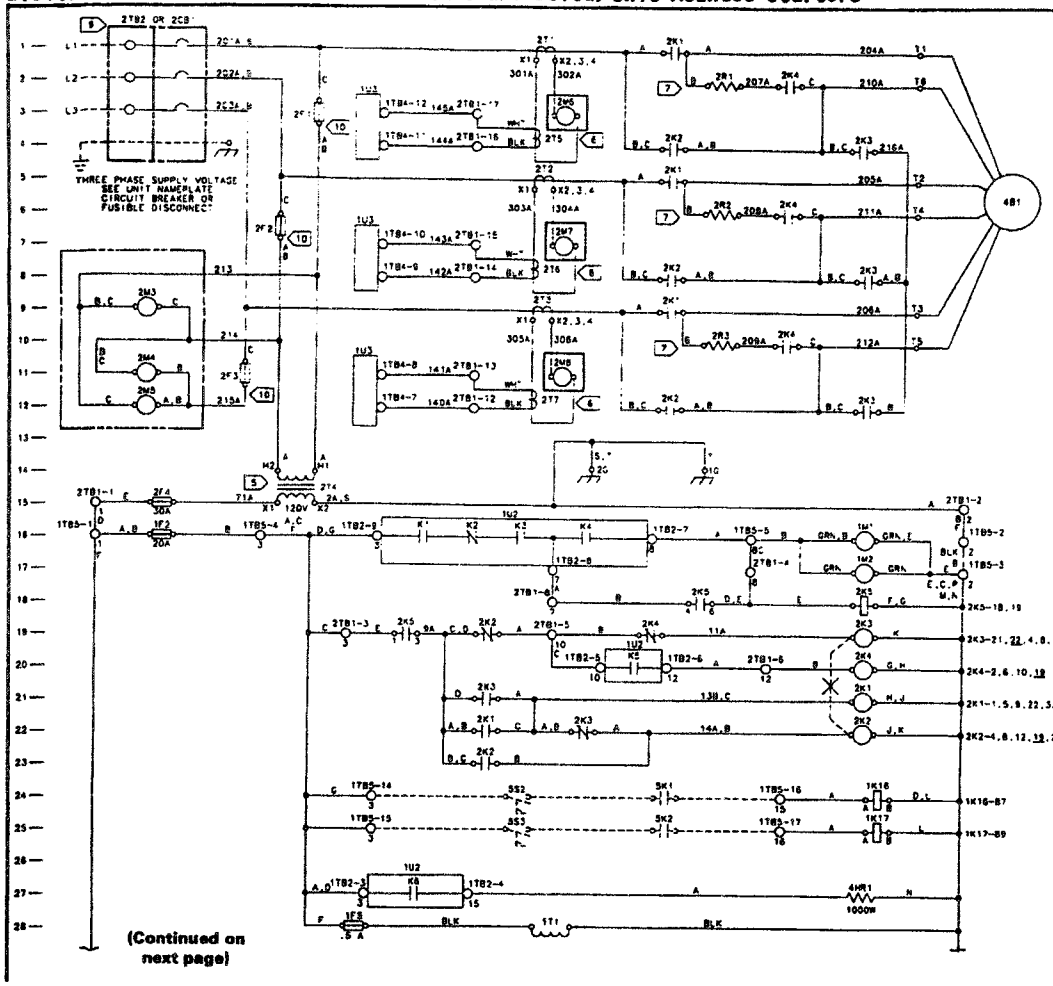

LEGEND		
DEVICE DESIGNATION	DESCRIPTION	LINE NUMBER
1C*	CAPACITOR, OIL PUMP	33
1F1	FUSE, OIL PUMP	33
1F3-5	BRANCH CIRCUIT FUSE	16,38, 28,38
1J1-6/1P1-6	POST HEADER POWER SUPPLY	31,83,84
1K8	OIL PUMP STARTER RELAY	33
1K*8	COND WTR PUMP RELAY	24
1K17	COND WTR PUMP RELAY	25
1M1	HOUR METER	16
1M2	START METER	17
1R1	RESISTOR PRESS TRANSDUCER	75
1S1	COND. HIGH PRESS SWITCH	95
1S2	DIFFERENTIAL PRESS SWITCH	65
1T1	POWER SUPPLY TRANSFORMER	26
1U1 1TB1	TERM BLOCK REL OUTPUT	
1U2 1TB2	TERM BLOCK POWER SPLY	
1U3 1TB3	TERM BLOCK MICRO INPUT	
1U3 1TB4	TERM BLOCK MICRO INPUT	
1TB5	TERM BLOCK CONTROL PANEL	
1U3 1TB6	TERM BLOCK MICRO INPUT	83,86
1U1	RELAY OUTPUT MODULE	SHEET 2
1U1 K9	PURGE RELAY	36
1U1 K6	COND WATER PUMP RELAY	82
1U1 K4	ALARM RELAY	89
1U1 K3	HEAD RELIEF RELAY	88
1U1 Q7	VANES OPEN	35
1U1 Q8	VANES CLOSED	34
1U2	POWER SUPPLY OUTPUT MOD	SHEET 2
1U2 K1	RESET RELAY	16
1U2 K2	STOP RELAY	16
1U2 K3	OVERLOAD RELAY	16
1U2 K4	COMPR.START RELAY	16
1U2 K5	COMPR.TRANSITION RELAY	20
1U2 K6	OIL HEATER RELAY	27
1U2 K7	OIL PUMP RELAY	32
1U3	MICRO MODULE	SHEET 2
2CB1	STARTER CIRCUIT BREAKER	1,2,3
2F1,2,3	PRIMARY STARTER FUSE	3,6,11
2K1-2	STARTER CONTACTOR	21,22
2K3	SHORTING CONTACTOR	19
2K4	TRANSITION CONTACTOR	20
2K5	STARTER RELAY	18
2M3,4,5	VOLT METER	9,11,12
2M6,7,8	AMP METER	3,7,11
2R1-3	TRANSITION RESISTOR	2,6,10
2T1-3	CURRENT TRANSFORMERS	1,5,9
2T4	CONTROL POWER TRANSFORMER	14
2T5-6	CURRENT TRANSFORMERS	4,7,11
2TB1	CONTROL TERMINAL BLOCK	
2TB2	LINE TERMINAL BLOCK	1,2,3
3M4	PURGE MOTOR	36
3DL1	PURGE RUN DELAY TIMER	41
3K3	PURGE SWITCH RELAY	46
3L1	PURGE SOLENOID VALVE	39
3L2	PURGE BLEED VALVE	43
3M1	PURGE HOUR METER	40
3M2	PURGE CYCLE COUNTER	44
3S1	PRESS SWITCH EXTEND RUN	48
3S2	PRESS SWITCH SAFETY	38
4B1	COMPRESSOR MOTOR	8
4R1R2,3,4	RESISTOR TEMP SENSOR	68,71,73
4B2	VANE ACTUATOR MOTOR	38
4B3	OIL PUMP MOTOR	32
4HR1	OIL TANK HEATER	27

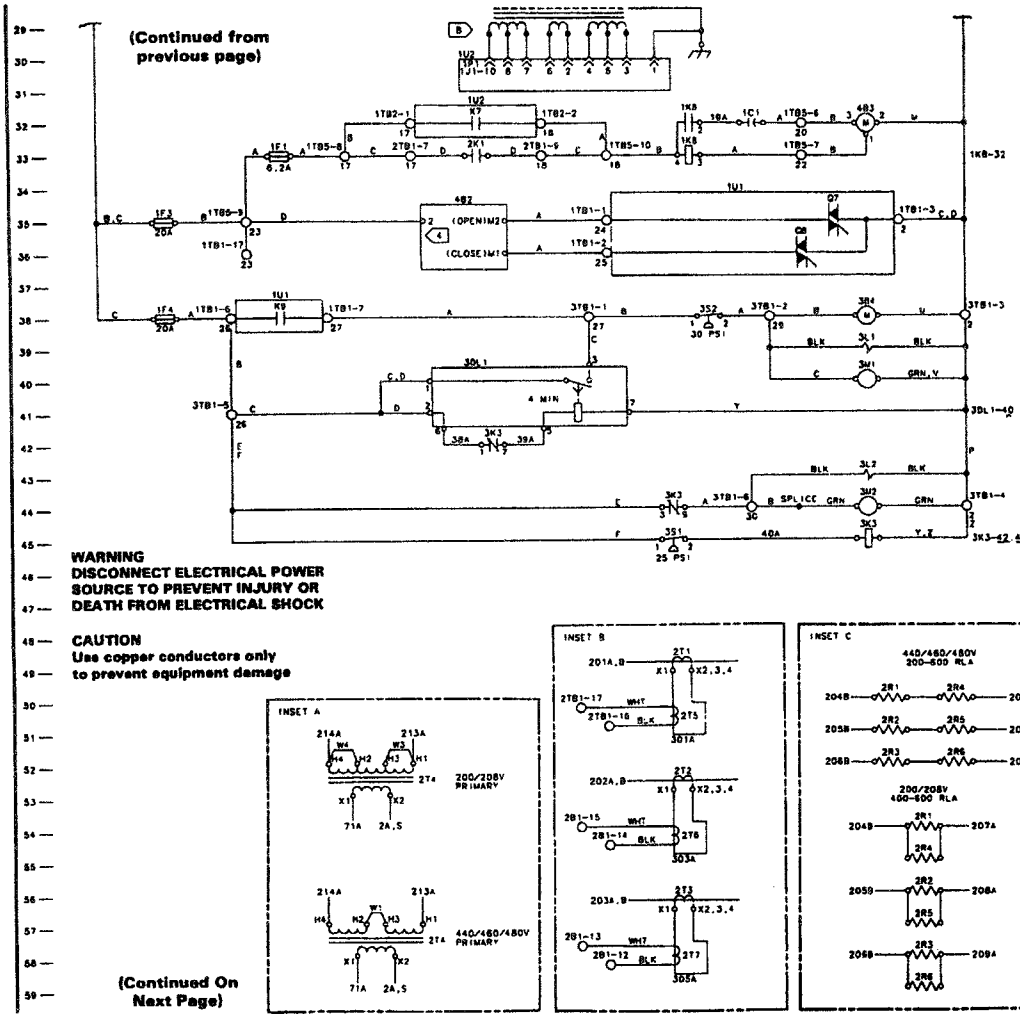

4RT1-9	THERMISTOR	69,67,70 73,77,80
5K1	CHWD WATER PUMP CONT. AUX	
5K2	COND WATER PUMP CONT. AUX	82
5S2	CHWD WATER FLOW SWITCH	24
5S3	COND WATER FLOW SWITCH	25
5S4	RUN SPARE FAULT SWITCH	67

DEVICE PREFIX LOCATION CODE	
AREA	LOCATION
1	CONTROL PANEL
2	STARTER PANEL
3	PURGE
4	EXTERNAL MOUNTED
5	CUSTOMER PROVIDED

NOTES

1. UNLESS OTHERWISE NOTED, ALL SWITCHES ARE SHOWN AT 25°C (77°F), AT ATMOSPHERIC PRESSURE, AT 50% RELATIVE HUMIDITY, WITH ALL UTILITIES TURNED OFF AND AFTER A NORMAL SHUTDOWN HAS OCCURED.
2. SOLID LINES INDICATE TRANE WIRING. DASHED LINES INDICATE FIELD WIRING. PHANTOM LINES INDICATE OPTIONAL FEATURES.
3. NUMBERS ALONG THE RIGHT SIDE OF THE SCHEMATIC DESIGNATE THE LOCATION OF THE CONTACTS BY LINE NUMBER. AN UNDERLINED NUMBER INDICATES A NORMALLY CLOSED CONTACT. AN OPEN ARROWHEAD BELOW THE LINE NUMBER POINTING UPWARD INDICATES A TIMED CONTACT WHICH BEGINS TIMING WHEN ENERGIZED
4. SEE INSET D FOR TYPICAL INTERNAL WIRING OF ACTUATOR.
5. 575/600 VOLT PRIMARY SHOWN. SEE INSET A FOR OTHER VOLTAGES.
6. OPTIONAL AMP METERS SHOWN. IF NOT REQUIRED SEE INSET B. WIRE NO. 302A,304A, AND 306A ARE NOT REQUIRED.
7. RESISTOR SHOWN FOR 200/208V AND 200-400 RLA. FOR OTHER VOLTAGES AND RLA SEE INSET C
8. SEE SERVICE MANUAL FOR INDIVIDUAL SECONDARY VOLTAGES
9. THREE PHASE POWER SUPPLY VOLTAGE SEE UNIT NAMEPLATE.
10. 20A FOR 200/208V-10A FOR 440/460/480 OR 8A FOR 575/600V

WARNING
DISCONNECT ELECTRICAL POWER SOURCE TO PREVENT INJURY OR DEATH FROM ELECTRICAL SHOCK

CAUTION
Use copper conductors only to prevent equipment damage

(Continued On Next Page)

Drwg. X394704388

Figure 3 (concluded)

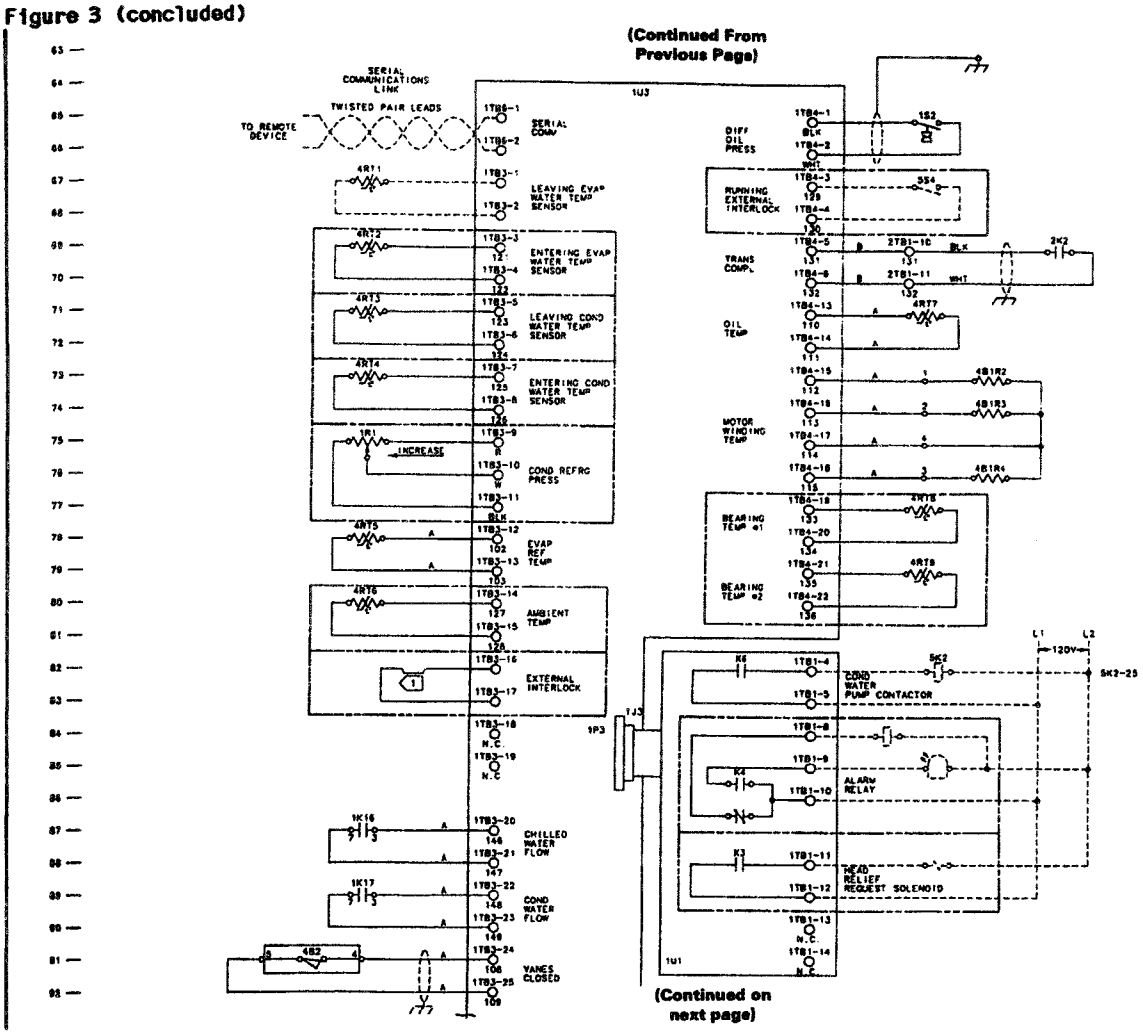

(Continued from previous page)

WARNING
DISCONNECT ELECTRICAL POWER SOURCE TO PREVENT INJURY OR DEATH FROM ELECTRICAL SHOCK

CAUTION
Use copper conductors only to prevent equipment damage

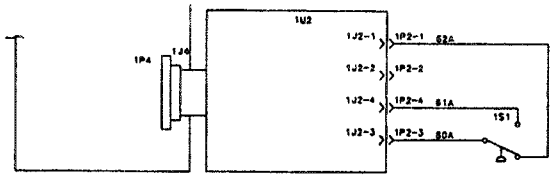

NOTES:
1. TERMINALS 1TB3-16 AND 1TB3-17 MUST BE JUMPERED IF EXTERNAL INTERLOCK IS NOT USED.
2. MANUAL RESET IS ACCOMPLISHED BY MOVING THE CHILLER SWITCH FROM "STANDBY/RESET" TO "AUTO".

CHILLER

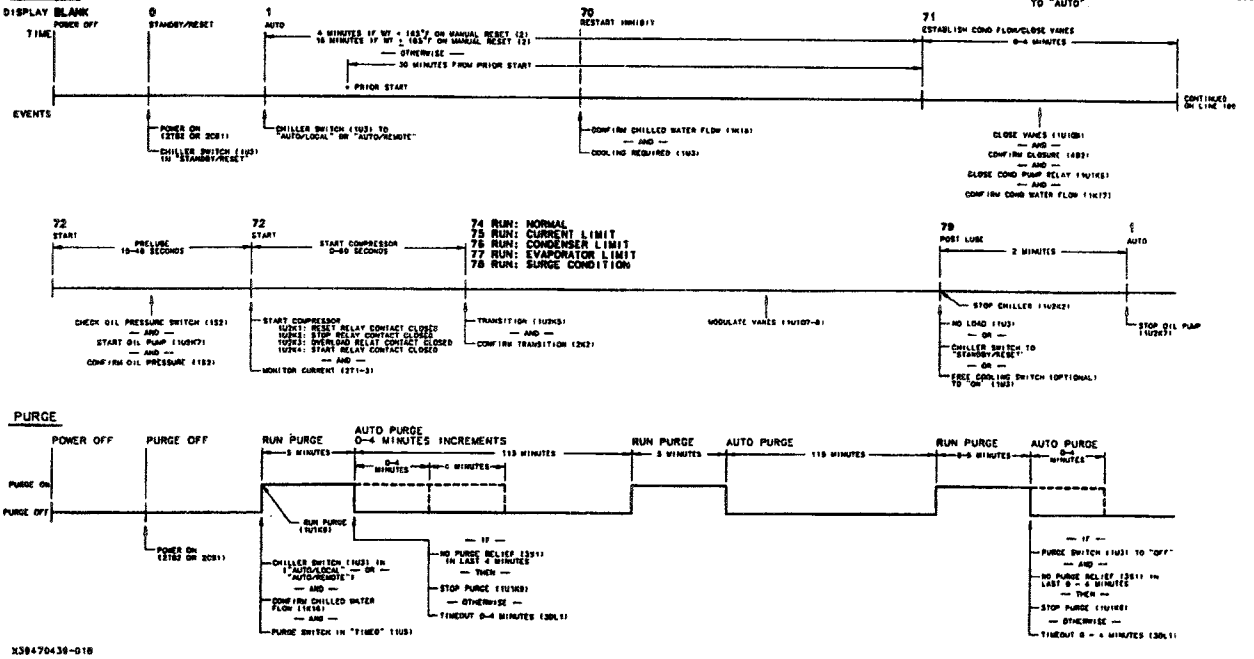

PURGE

X39470438-01B

Drwg. X39470439B

Figure 4
Electrical Schematic for Standard CVHEs w/Typical, Remote Y-Delta Starters

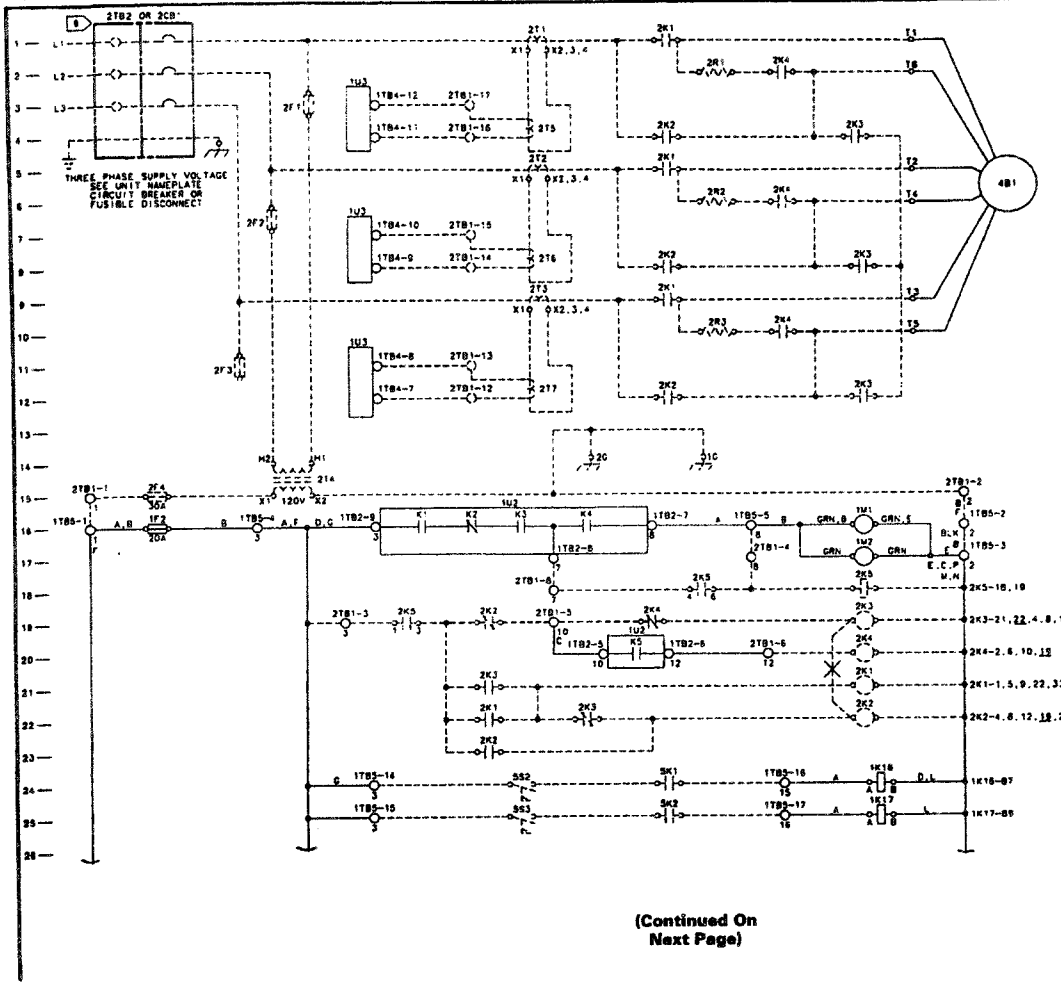

DEVICE PREFIX LOCATION CODE	
AREA	LOCATION
1	CONTROL PANEL
2	STARTER PANEL
3	PURGE
4	EXTERNAL MOUNTED
5	CUSTOMER PROVIDED

LEGEND		
DEVICE DESIGNATION	DESCRIPTION	LINE NUMBER
1C1	CAPACITOR, OIL PUMP	32
1F1	FUSE, OIL PUMP	33
1F2-5	BRANCH CIRCUIT FUSE	16,35, 28,36
1J1-4/1P1-4	POST HEADER POWER SUPPLY	31,85,84
1K8	OIL PUMP STARTER RELAY	33
1K16	COND WTR PUMP RELAY	24
1K17	COND WTR PUMP RELAY	25
1M1	HOUR METER	16
1M2	START METER	17
1R1	RESISTOR PRESS TRANSDUCER	75
1S1	COND. HIGH PRESS SWITCH	83
1S2	DIFFERENTIAL PRESS SWITCH	85
1T1	POWER SUPPLY TRANSFORMER	28
1U1 1TB1	TERM BLOCK REL OUTPUT	
1U2 1TB2	TERM BLOCK POWER SPLY	
1U3 1TB3	TERM BLOCK MICRO INPUT	
1U3 1TB4	TERM BLOCK MICRO INPUT	
1TB5	TERM BLOCK CONTROL PANEL	
1U3 1TB6	TERM BLOCK MICRO INPUT	85,66
1U1	RELAY OUTPUT MODULE	SHEET 2
1U1 K9	PURGE RELAY	30
1U1 K8	COND WATER PUMP RELAY	82
1U1 K4	ALARM RELAY	85
1U1 K3	HEAD RELIEF RELAY	86
1U1 Q7	VANES OPEN	35
1U1 Q8	VANES CLOSED	36
1U2	POWER SUPPLY OUTPUT MOD	SHEET 2
1U2 K1	RESET RELAY	16
1U2 K2	STOP RELAY	16
1U2 K3	OVERLOAD RELAY	16
1U2 K4	COMPR.START RELAY	16
1U2 K5	COMPR.TRANSITION RELAY	20
1U2 K6	OIL HEATER RELAY	27
1U2 K7	OIL PUMP RELAY	32
1U3	MICRO MODULE	SHEET 2
2CB1	STARTER CIRCUIT BREAKER	1,2,3
2F1,2,3	PRIMARY STARTER FUSE	3,8,11
2K1-2	STARTER CONTACTOR	21,22
2K3	SHORTING CONTACTOR	19
2K4	TRANSITION CONTACTOR	20
2K5	STARTER RELAY	18
2R1-3	TRANSITION RESISTOR	2,6,10
2T1-3	CURRENT TRANSFORMERS	1,5,9
2T4	CONTROL POWER TRANSFORMER	14
2T5-6	CURRENT TRANSFORMERS	4,7,11
2TB1	CONTROL TERMINAL BLOCK	
2TB2	LINE TERMINAL BLOCK	1,2,3

(Continued On Next Page)

(Continued From Previous Page)

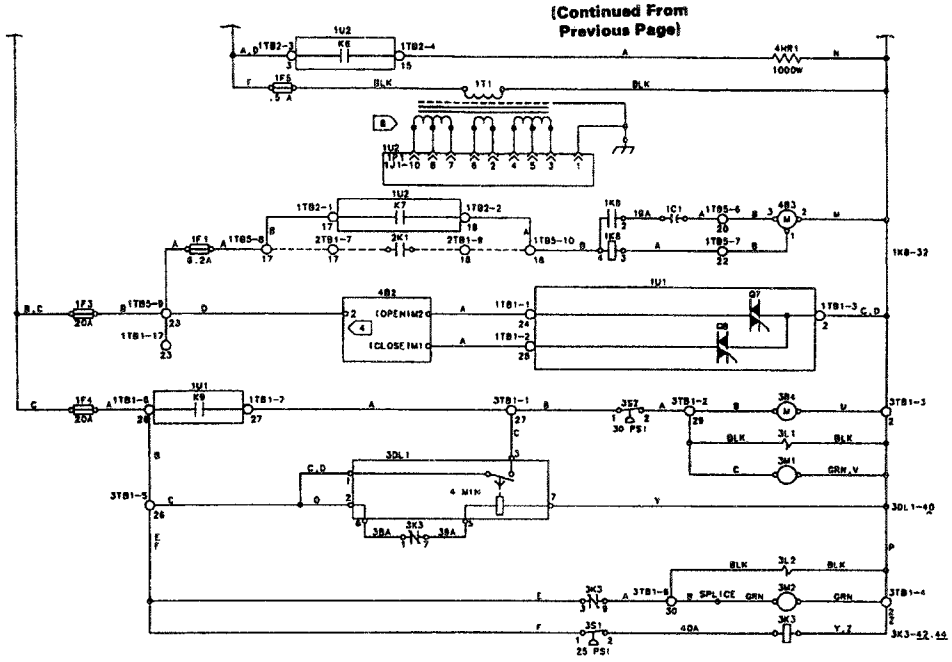

3B4	PURGE MOTOR	38
3DL1	PURGE RUN DELAY TIMER	41
3K3	PURGE SWITCH RELAY	45
3L1	PURGE SOLENOID VALVE	38
3L2	PURGE BLEED VALVE	43
3M1	PURGE HOUR METER	40
3M2	PURGE CYCLE COUNTER	44
3S1	PRESS SWITCH EXTEND RUN	45
3S2	PRESS SWITCH SAFETY	38
4B1	COMPRESSOR MOTOR	9
4B1R2,3,4	RESISTOR TEMP SENSOR	69,71,73
4B2	VANE ACTUATOR MOTOR	35
4B3	OIL PUMP MOTOR	32
4HR1	OIL TANK HEATER	27
4RT1-8	THERMISTOR	69,67,70 73,77,80
5K1	CHWD WATER PUMP CONT. AUX	
5K2	COND WATER PUMP CONT. AUX	82
5S2	CHWD WATER FLOW SWITCH	34
5S3	COND WATER FLOW SWITCH	25
5S4	RUN SPARE FAULT SWITCH	87

WARNING
DISCONNECT ELECTRICAL POWER SOURCE TO PREVENT INJURY OR DEATH FROM ELECTRICAL SHOCK

CAUTION
Use copper conductors only to prevent equipment damage

NOTES:
1. UNLESS OTHERWISE NOTED, ALL SWITCHES ARE SHOWN AT 25°C (77°F), AT ATMOSPHERIC PRESSURE, AT 50% RELATIVE HUMIDITY, WITH ALL UTILITIES TURNED OFF AND AFTER A NORMAL SHUTDOWN HAS OCCURED.
2. SOLID LINES INDICATE TRANE WIRING. DASHED LINES INDICATE FIELD WIRING. PHANTOM LINES INDICATE OPTIONAL FEATURES.
3. NUMBERS ALONG THE RIGHT SIDE OF THE SCHEMATIC DESIGNATE THE LOCATION OF THE CONTACTS BY LINE NUMBER. AN UNDERLINED NUMBER INDICATES A NORMALLY CLOSED CONTACT. AN OPEN ARROWHEAD BELOW THE LINE NUMBER POINTING UPWARD INDICATES A TIMED CONTACT WHICH BEGINS TIMING WHEN ENERGIZED.

(4) SEE INSET D FOR TYPICAL INTERNAL WIRING OF ACTUATOR.

(8) SEE SERVICE MANUAL FOR INDIVIDUAL SECONDARY VOLTAGES

(9) THREE PHASE POWER SUPPLY VOLTAGE SEE UNIT NAMEPLATE.

10 REMOTE Y-Δ STARTER SHOWN AND WIRING BETWEEN CONTROL PANEL AND STARTER REMAIN SIMILAR FOR VARIOUS TYPES OF STARTERS. SEE STARTER MANUFACTURERS WIRING DIAGRAM FOR SPECIFIC STARTER WIRING.

(Continued on next page)

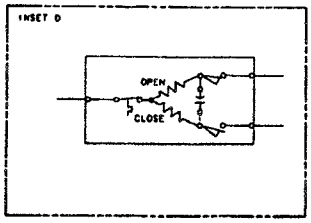

Drwg. X394704408

Figure 4 (concluded)

(Continued from previous page)

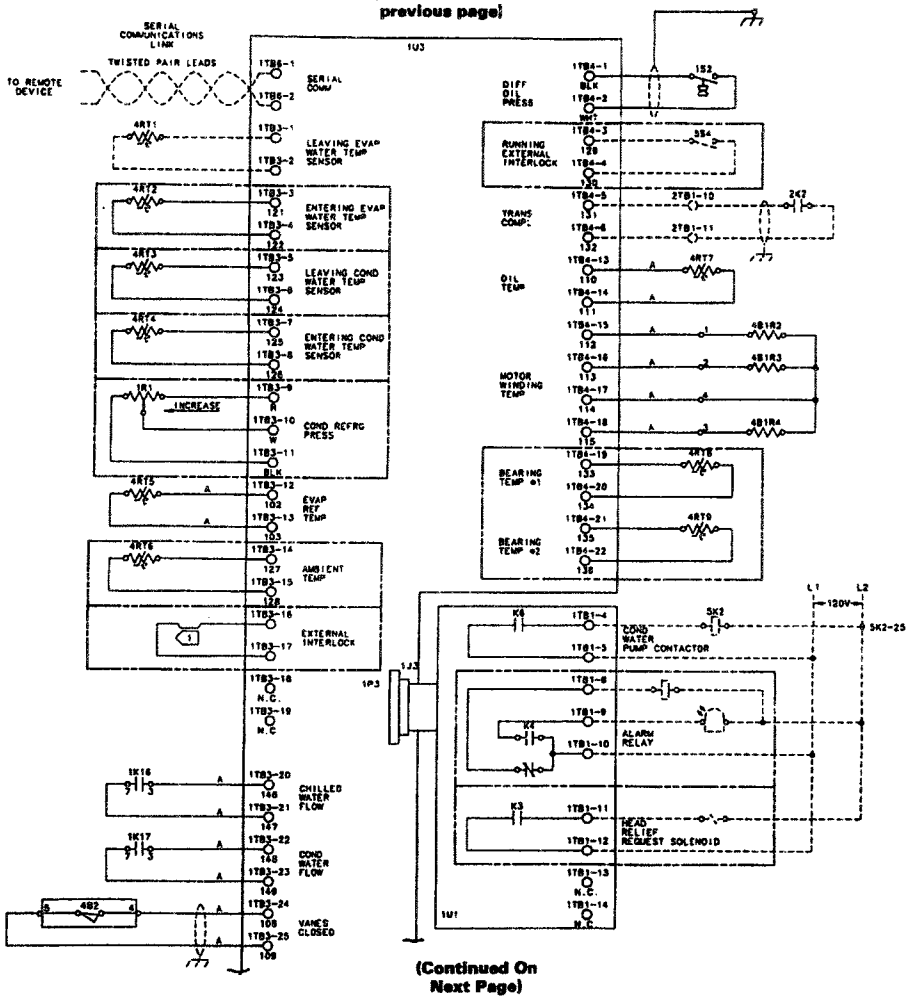

(Continued From Previous Page)

WARNING
DISCONNECT ELECTRICAL POWER SOURCE TO PREVENT INJURY OR DEATH FROM ELECTRICAL SHOCK

CAUTION
Use copper conductors only to prevent equipment damage

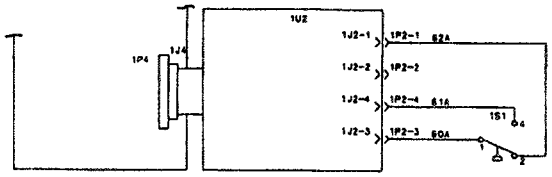

NOTES:
1. TERMINALS 1TB3-16 AND 1TB3-17 MUST BE JUMPERED IF EXTERNAL INTERLOCK IS NOT USED.
2. MANUEL RESET IS ACCOMPLISHED BY MOVING THE CHILLER SWITCH FROM "STANDBY/RESET" TO "AUTO".

CHILLER

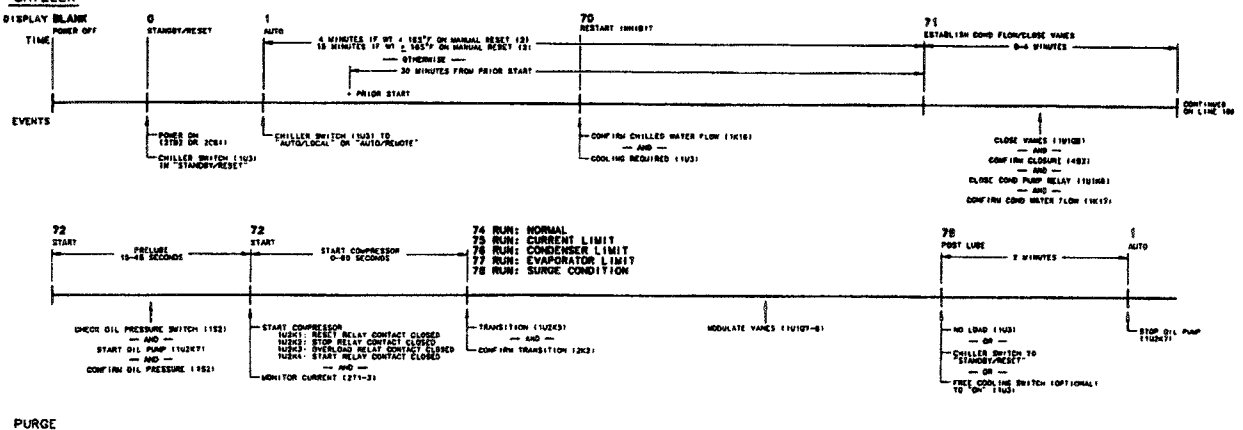

PURGE

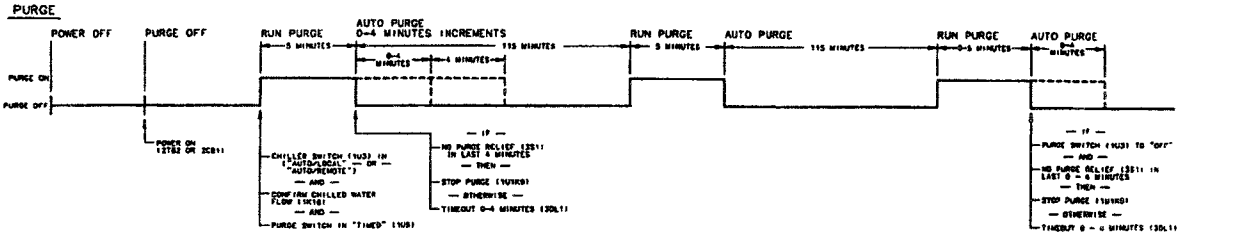

X39470441-01B

Drwg. X39470441B

Figure 5
Electrical Schematic for CVHEs w/Hot Gas Bypass and Y-Delta, Unit-Mounted Starters

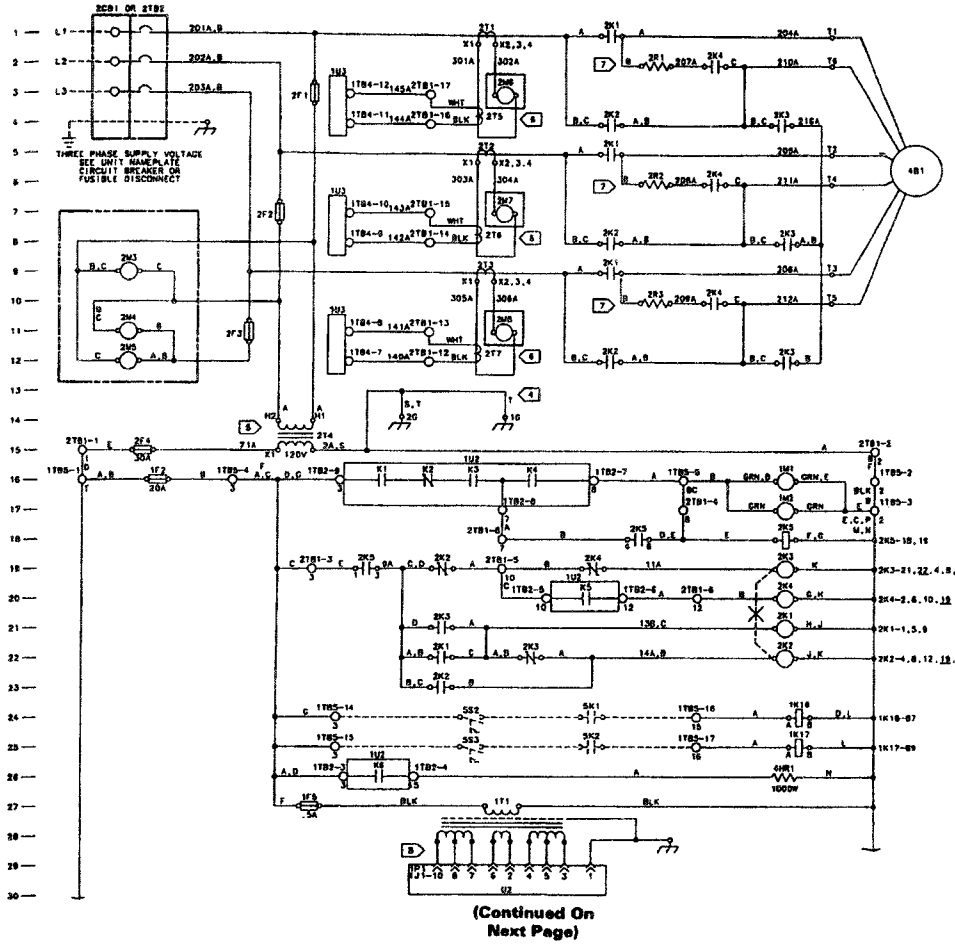

DEVICE PREFIX LOCATION CODE	
AREA	LOCATION
1	CONTROL PANEL
2	STARTER PANEL
3	PURGE
4	EXTERNAL MOUNTED
5	CUSTOMER PROVIDED

LEGEND		
DEVICE DESIGNATION	DESCRIPTION	LINE NUMBER
1C2	CAPACITOR, OIL PUMP	30
1F1	FUSE, OIL PUMP	32
1F2-5	BRANCH CIRCUIT FUSE	16,34 40,37
1J1-6/1P1-6	POST HEADER POWER SUPPLY	28,65,64
1K8	OIL PUMP STARTER RELAY	31
1K16	COND WTR PUMP RELAY	24
1K17	COND WTR PUMP RELAY	25
1M1	HOUR METER	16
1M2	START METER	17
1R1	RESISTOR PRESS TRANSDUCER	75
1S1	COND. HIGH PRESS SWITCH	85
1S2	DIFFERENTIAL PRESS SWITCH	95
1T1	POWER SUPPLY TRANSFORMER	27
1U1 1TB1	TERM BLOCK REL OUTPUT	
1U2 1TB2	TERM BLOCK POWER SPLY	
1U3 1TB3	TERM BLOCK MICRO INPUT	
1U3 1TB4	TERM BLOCK MICRO INPUT	
1TB5	TERM BLOCK CONTROL PANEL	
1U3 1TB6	TERM BLOCK MICRO INPUT	65,66
1U1	RELAY OUTPUT MODULE	SHEET 2
1U1 K8	PURGE RELAY	40
1U1 K6	COND WATER PUMP RELAY	82
1U1 K4	ALARM RELAY	86
1U1 K3	HEAD RELIEF RELAY	88
1U1 G7	VANES OPEN	34
1U1 G8	VANES CLOSED	35
1U2	POWER SUPPLY OUTPUT MOD	SHEET 2
1U2 K1	RESET RELAY	10
1U2 K2	STOP RELAY	18
1U2 K3	OVERLOAD RELAY	18
1U2 K4	COMPR START RELAY	18
1U2 K5	COMPR. TRANSITION RELAY	20
1U2 K6	OIL HEATER RELAY	26
1U2 K7	OIL PUMP RELAY	31
1U3	MICRO MODULE	SHEET 2
2CB1	STARTER CIRCUIT BREAKER	1,2,3
2F1,2,3	PRIMARY STARTER FUSE	3,7,11
2K1-3	STARTER CONTACTOR	21,22
2K3	SHORTING CONTACTOR	19
2K4	TRANSITION CONTACTOR	20
2K5	STARTER RELAY	18
2M3,4,5	VOLT METER	9,11,12
2M6,7,8	AMP METER	3,7,1
2R1-9	TRANSITION RESISTOR	2,8,10
2T1-3	CURRENT TRANSFORMERS	2,8,10
2T4	CONTROL POWER TRANSFORMER	14
2T5-6	CURRENT TRANSFORMERS	4,7,11
2TB1	CONTROL TERMINAL BLOCK	
2TB2	LINE TERMINAL BLOCK	1,2,3
3M4	PURGE MOTOR	40
3DL1	PURGE RUN DELAY TIMER	42
3K3	PURGE SWITCH RELAY	40
3L1	PURGE SOLENOID VALVE	41
3L2	PURGE BLEED VALVE	44
3M1	PURGE HOUR METER	42
3M2	PURGE CYCLE COUNTER	43
3S1	PRESS SWITCH EXTEND RUN	46
3S2	PRESS SWITCH SAFETY	40

(Continued from previous page)

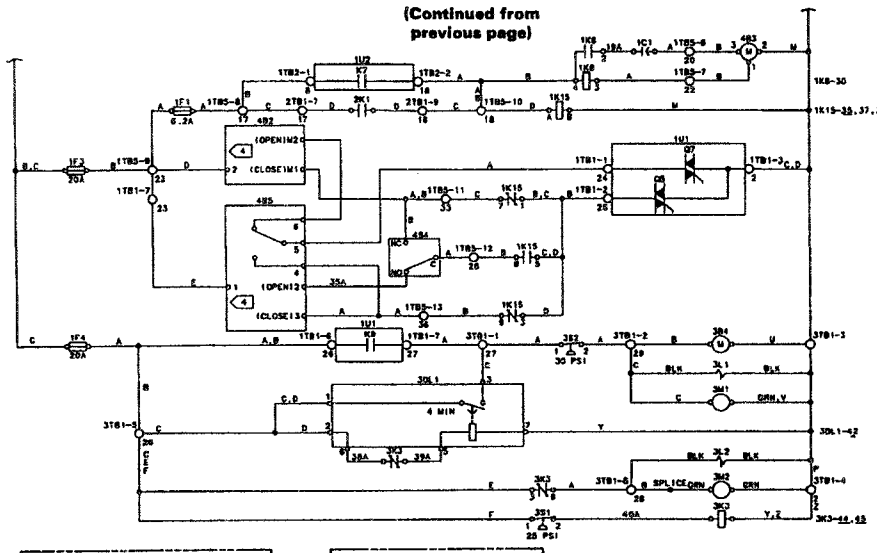

4B1	COMPRESSOR MOTOR	3
4B1R2,3,4	RESISTOR TEMP SENSOR	69,71,73
4B2	VANE ACTUATOR MOTOR	33
4B3	OIL PUMP MOTOR	30
4B5	HOT GAS BY-PASS VALVE	34
4HR1	OIL TANK HEATER	26
4RT1-9	THERMISTOR	68,87,70 73,77,89
4S4	DAMPER END SWITCH	37
4S5	DISCHARGE TEMP. SWITCH	87
5K1	CHWD WATER PUMP CONT. AUX	
5K2	CONO WATER PUMP CONT. AUX	83
5S2	CHWD WATER FLOW SWITCH	24
5S3	COND WATER FLOW SWITCH	25

NOTES:

1. UNLESS OTHERWISE NOTED, ALL SWITCHES ARE SHOWN AT 25°C (77°F), AT ATMOSPHERIC PRESSURE, AT 50% RELATIVE HUMIDITY, WITH ALL UTILITIES TURNED OFF AND AFTER A NORMAL SHUTDOWN HAS OCCURED.
2. SOLID LINES INDICATE TRANE WIRING, DASHED LINES INDICATE FIELD WIRING. PHANTOM LINES INDICATE OPTIONAL FEATURES
3. NUMBERS ALONG THE RIGHT SIDE OF THE SCHEMATIC DESIGNATE THE LOCATION OF THE CONTACTS BY LINE NUMBER. AN UNDERLINED NUMBER INDICATES A NORMALLY CLOSED CONTACT. AN OPEN ARROWHEAD BELOW THE LINE NUMBER POINTING UPWARD INDICATES A TIMED CONTACT WHICH BEGINS TIMING WHEN ENERGIZED.

4. SEE INSET G FOR TYPICAL INTERNAL WIRING OF ACTUATOR.
5. 575/600 VOLT PRIMARY SHOWN. SEE INSET A FOR OTHER VOLTAGES.
6. OPTIONAL AMP METERS SHOWN IF NOT REQUIRED SEE INSET B. WIRE NO. 303A,304A, AND 306A ARE NOT REQUIRED.
7. RESISTOR SHOWN FOR 200/208V AND 200-600 RLA. FOR OTHER VOLTAGES AND RLA SEE INSET C.
8. SEE SERVICE MANUAL FOR INDIVIDUAL SECONDARY VOLTAGES.
9. THREE PHASE POWER SUPPLY VOLTAGE SEE UNIT NAMEPLATE.
10. 30A FOR 200/208V-10A FOR 440/460V 480 OR 6A FOR 575/600V.

INSET A

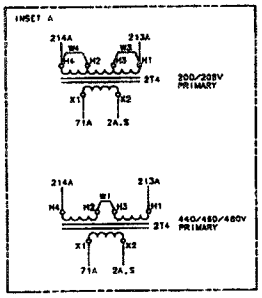

INSET B

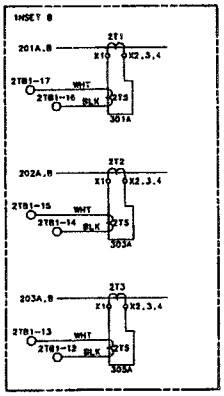

INSET C

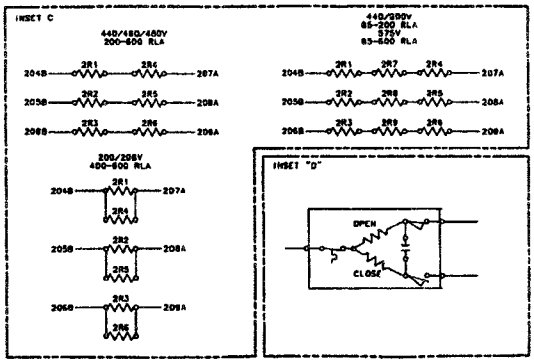

INSET "D"

WARNING
DISCONNECT ELECTRICAL POWER SOURCE TO PREVENT INJURY OR DEATH FROM ELECTRICAL SHOCK

CAUTION
Use copper conductors only to prevent equipment damage

(Continued On Next Page)

Drwg. X39470446A

Figure 5 (concluded)

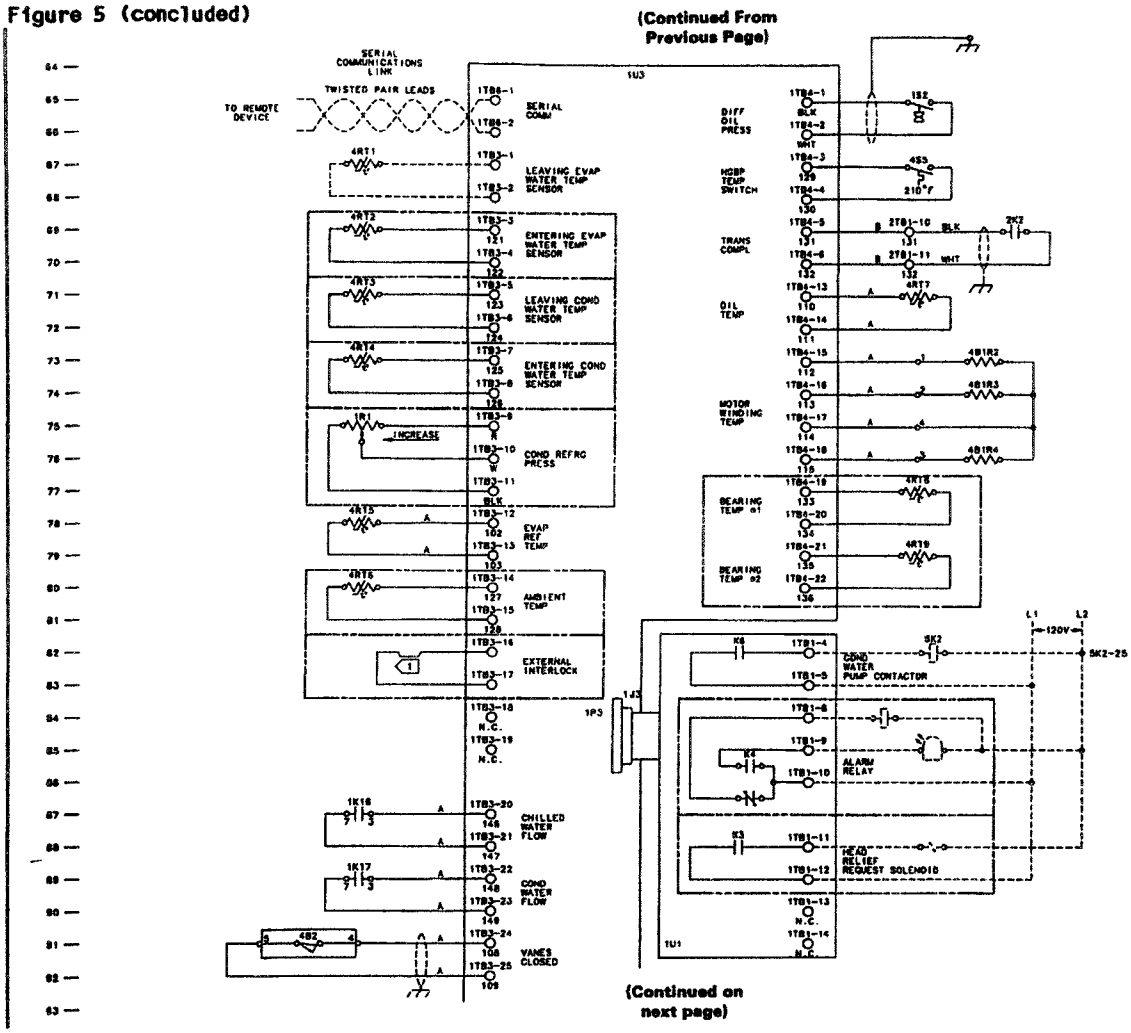

(Continued From Previous Page)

WARNING
DISCONNECT ELECTRICAL POWER SOURCE TO PREVENT INJURY OR DEATH FROM ELECTRICAL SHOCK

CAUTION
Use copper conductors only to prevent equipment damage

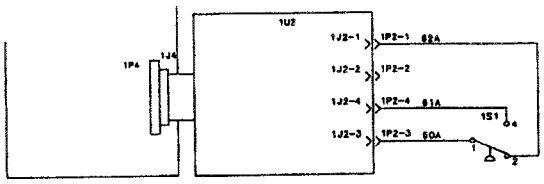

NOTES:
1. TERMINALS 1TB3-16 AND 1TB3-17 MUST BE JUMPERED IF EXTERNAL INTERLOCK IS NOT USED.
2. MANUEL RESET IS ACCOMPLISHED BY MOVING THE CHILLER SWITCH FROM "STANDBY/RESET" TO "AUTO".

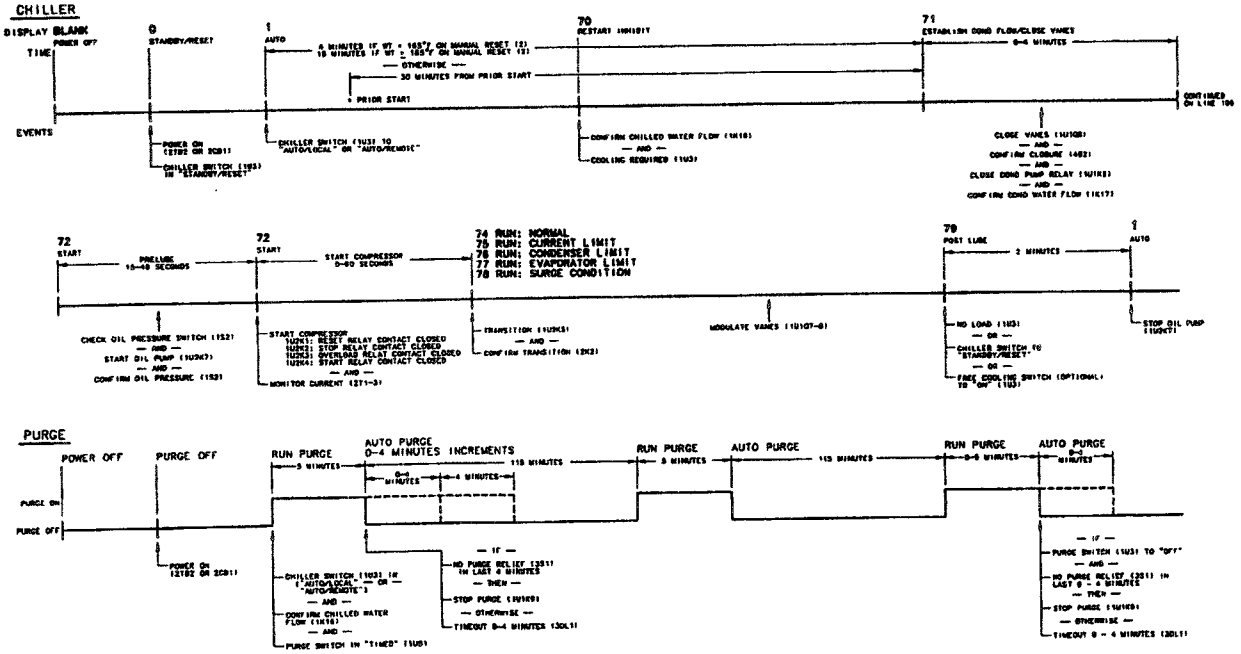

X39470447-01B

Drwg. X39470447B

Figure 6
Electrical Schematic for CVHEs w/Hot Gas Bypass and Typical, Remote Y-Delta Starters

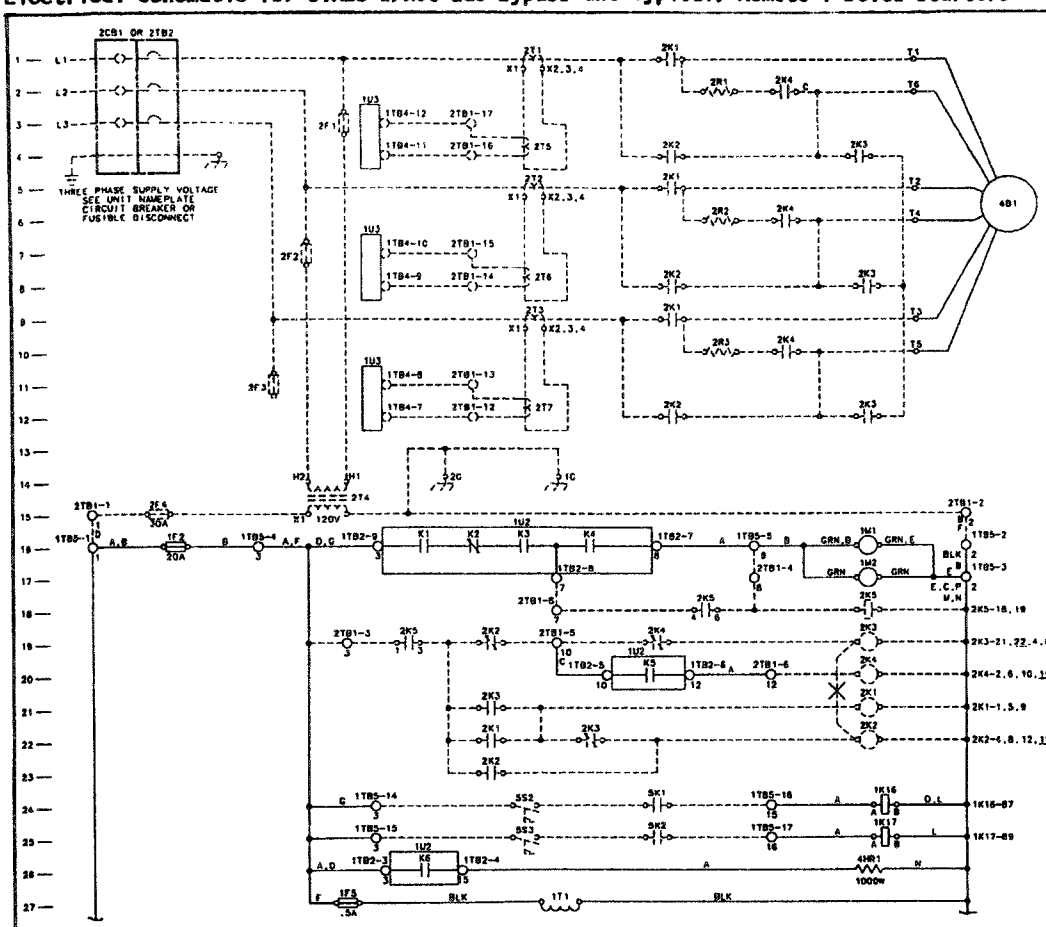

DEVICE PREFIX LOCATION CODE	
AREA	LOCATION
1	CONTROL PANEL
2	STARTER PANEL
3	PURGE
4	EXTERNAL MOUNTED
5	CUSTOMER PROVIDED

LEGEND		
DEVICE DESIGNATION	DESCRIPTION	LINE NUMBER
1C2	CAPACITOR, OIL PUMP	30
1F1	FUSE, OIL PUMP	32
1F2-5	BRANCH CIRCUIT FUSE	16,34 40,27
1J1-4/1P1-4	POST HEADER POWER SUPPLY	29,85,94
1K6	OIL PUMP STARTER RELAY	31
1K16	CND WTR PUMP RELAY	24
1K17	COND WTR PUMP RELAY	25
1M1	HOUR METER	16
1M2	START METER	17
1R1	RESISTOR PRESS TRANSDUCER	75
1S1	COND. HIGH PRESS SWITCH	85
1S2	DIFFERENTIAL PRESS SWITCH	65
1T1	POWER SUPPLY TRANSFORMER	27
1U1 1TB1	TERM BLOCK REL OUTPUT	
1U2 1TB2	TERM BLOCK POWER SPLY	
1U3 1TB3	TERM BLOCK MICRO INPUT	
1U3 1TB4	TERM BLOCK MICRO INPUT	
1TB5	TERM BLOCK CONTROL PANEL	
1U3 1TB6	TERM BLOCK MICRO INPUT	65,66
1U1	RELAY OUTPUT MODULE	SHEET 2
1U1 K9	PURGE RELAY	40
1U1 K8	COND WATER PUMP RELAY	82
1U1 K4	ALARM RELAY	86
1U1 K3	HEAD RELIEF RELAY	88
1U1 Q7	VANES OPEN	34
1U1 Q8	VANES CLOSED	35
1U2	POWER SUPPLY OUTPUT MOD	SHEET 2
1U2 K1	RESET RELAY	18
1U2 K2	STOP RELAY	18
1U2 K3	OVERLOAD RELAY	18
1U2 K4	COMPR.START RELAY	18
1U2 K5	COMPR. TRANSITION RELAY	20
1U2 K6	OIL HEATER RELAY	28
1U2 K7	OIL PUMP RELAY	51
1U3	MICRO MODULE	SHEET 2
2CB1	STARTER CIRCUIT BREAKER	1,2,3
2F1,2,3	PRIMARY STARTER FUSE	3,7,11
2K1-2	STARTER CONTACTOR	21,22
2K3	SHORTING CONTACTOR	18
2K4	TRANSITION CONTACTOR	20
2K5	STARTER RELAY	18
2R1-3	TRANSITION RESISTOR	2,8,10
2T1-3	CURRENT TRANSFORMERS	2,8,10
2T4	CONTROL POWER TRANSFORMER	14
2T5-6	CURRENT TRANSFORMERS	4,7,11
2TB1	CONTROL TERMINAL BLOCK	
2TB2	LINE TERMINAL BLOCK	1,2,3

(Continued on next page)

(Continued from previous page)

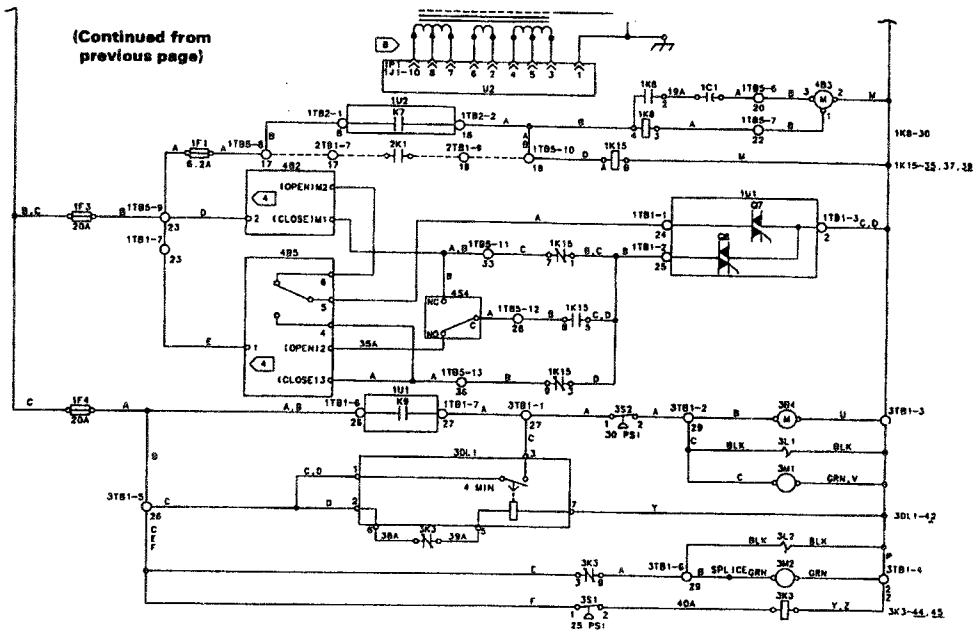

3B4	PURGE MOTOR	40
3DL1	PURGE RUN DELAY TIMER	42
3K3	PURGE SWITCH RELAY	46
3L1	PURGE SOLENOID VALVE	41
3L2	PURGE BLEED VALVE	44
3M1	PURGE HOUR METER	43
3M2	PURGE CYCLE COUNTER	45
3S1	PRESS SWITCH EXTEND RUN	46
3S2	PRESS SWITCH SAFETY	40
4B1	COMPRESSOR MOTOR	8
4B1R2,3,4	RESISTOR TEMP SENSOR	69,71,73
4B2	VANE ACTUATOR MOTOR	33
4B3	OIL PUMP MOTOR	30
4B5	HOT GAS BY-PASS VALVE	36
4HR1	OIL TANK HEATER	26
4R11-9	THERMISTOR	69,67,70 73,77,80
4S4	DAMPER END SWITCH	37
4S5	DISCHARGE TEMP. SWITCH	87
8K1	CHWD WATER PUMP CONT. AUX	
8K2	COND WATER PUMP CONT. AUX	82
8S2	CHWD WATER FLOW SWITCH	24
8S3	COND WATER FLOW SWITCH	25

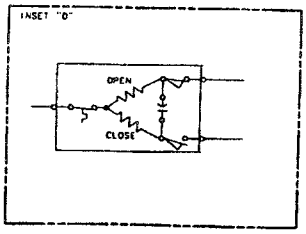

NOTES:

1. UNLESS OTHERWISE NOTED, ALL SWITCHES ARE SHOWN AT 25°C (77°F), AT ATMOSPHERIC PRESSURE, AT 50% RELATIVE HUMIDITY, WITH ALL UTILITIES TURNED OFF AND AFTER A NORMAL SHUTDOWN HAS OCCURED.
2. SOLID LINES INDICATE TRANE WIRING, DASHED LINES INDICATE FIELD WIRING. PHANTOM LINES INDICATE OPTIONAL FEATURES.
3. NUMBERS ALONG THE RIGHT SIDE OF THE SCHEMATIC DESIGNATE THE LOCATION OF THE CONTACTS BY LINE NUMBER. AN UNDERLINED NUMBER INDICATES A NORMALLY CLOSED CONTACT. AN OPEN ARROWHEAD BELOW THE LINE NUMBER POINTING UPWARD INDICATES A TIMED CONTACT WHICH BEGINS TIMING WHEN ENERGIZED.

[4] SEE INSET D FOR TYPICAL INTERNAL WIRING OF ACTUATOR.

[8] SEE SERVICE MANUAL FOR INDIVIDUAL SECONDARY VOLTAGES.

[9] THREE PHASE POWER SUPPLY VOLTAGE SEE UNIT NAMEPLATE.

10. REMOTE Y-Δ STARTER SHOWN. WIRING BETWEEN CONTROL PANEL AND STARTER REMAIN SIMILAR FOR VARIOUS TYPES OF STARTERS. SEE STARTER MANUFACTURES WIRING DIAGRAM FOR SPECIFIC STARTER WIRING.

WARNING
DISCONNECT ELECTRICAL POWER SOURCE TO PREVENT INJURY OR DEATH FROM ELECTRICAL SHOCK

CAUTION
Use copper conductors only to prevent equipment damage

(Continued On Next Page)

Drwg. X39470448A

Figure 6 (concluded)

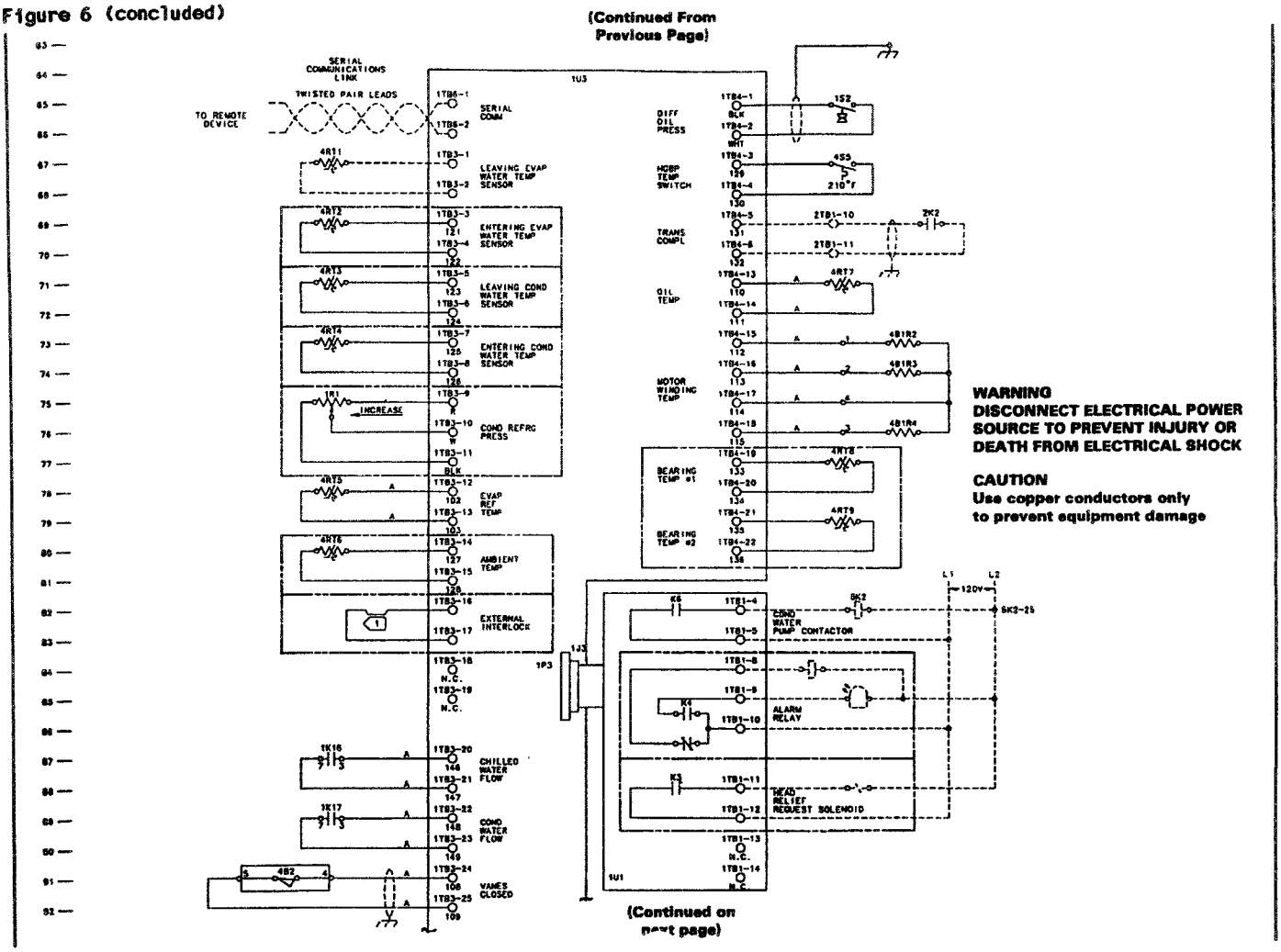

WARNING
DISCONNECT ELECTRICAL POWER SOURCE TO PREVENT INJURY OR DEATH FROM ELECTRICAL SHOCK

CAUTION
Use copper conductors only to prevent equipment damage

(Continued from previous page)

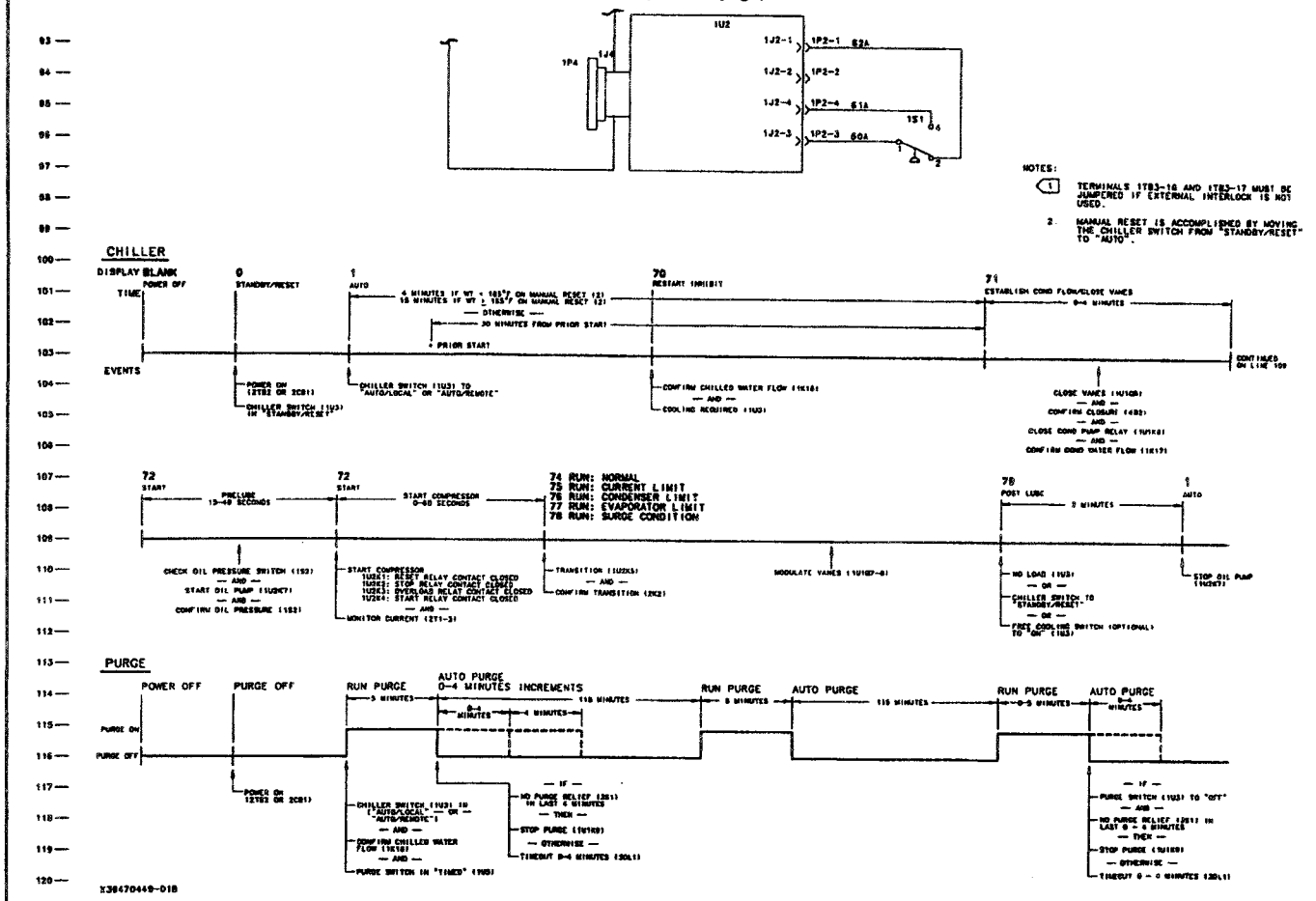

Drwg. X39470449B

Figure 7
Electrical Schematic for CVHEs w/Free Cooling and Y-Delta, Unit-Mounted Starters

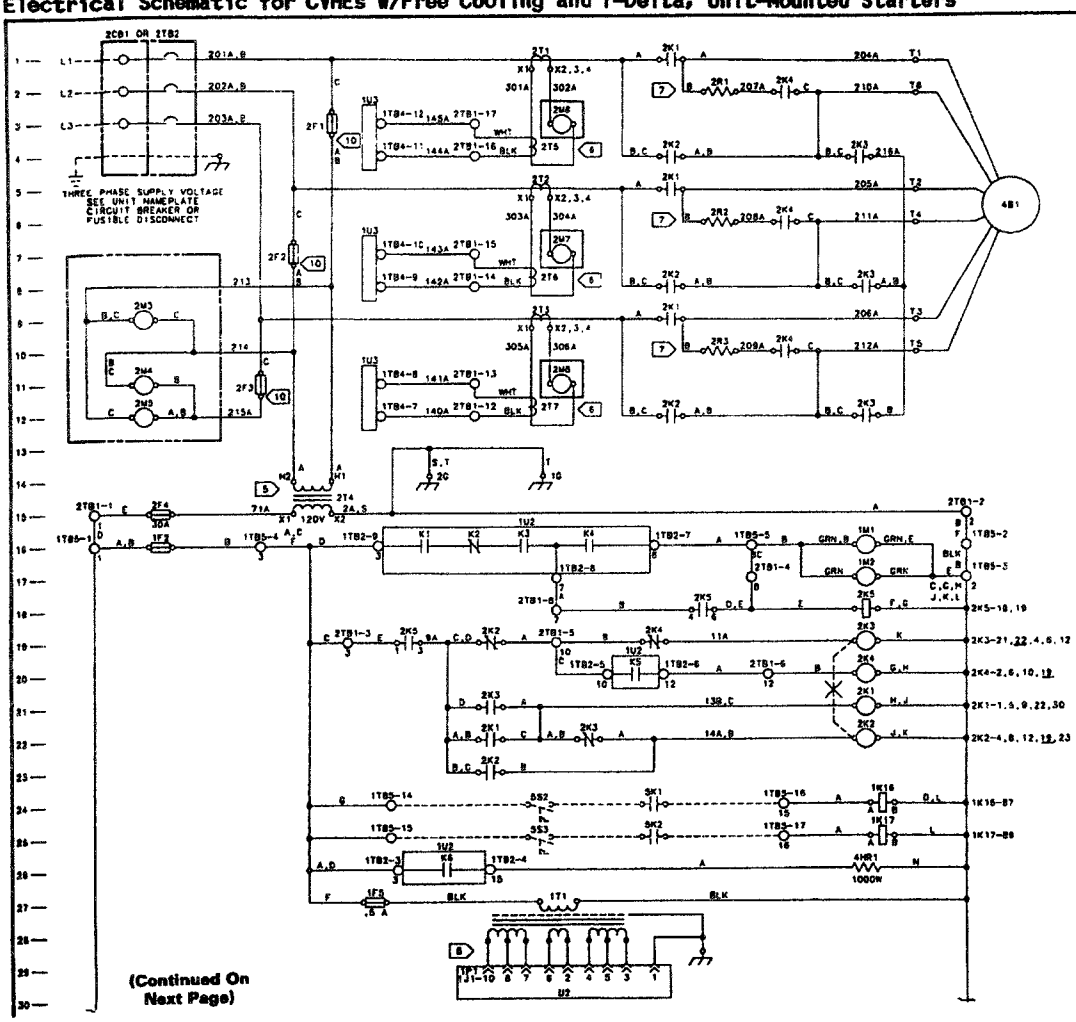

DEVICE PREFIX LOCATION CODE	
AREA	LOCATION
1	CONTROL PANEL
2	STARTER PANEL
3	PURGE
4	EXTERNAL MOUNTED
5	CUSTOMER PROVIDED

LEGEND		
DEVICE DESIGNATION	DESCRIPTION	LINE NUMBER
1C1	CAPACITOR, OIL PUMP	31
1F1	FUSE, OIL PUMP	32
1F2-5	BRANCH CIRCUIT FUSE	16,34 40,27
1J1-6/1P1-4	POST HEADER POWER SUPPLY	29,85,84
1K8	OIL PUMP STARTER RELAY	32
1K16	CND WTR PUMP RELAY	24
1K17	COND WTR PUMP RELAY	25
1M1	HOUR METER	16
1M2	STARY METER	17
1R1	RESISTOR PRESS TRANSDUCER	75
1S1	COND. HIGH PRESS SWITCH	85
1S2	DIFFERENTIAL PRESS SWITCH	85
1T1	POWER SUPPLY TRANSFORMER	27
1U1 1TB1	TERM BLOCK REL OUTPUT	
1U2 1TB2	TERM BLOCK POWER SPLY	
1U3 1TB3	TERM BLOCK MICRO INPUT	
1U3 1TB4	TERM BLOCK MICRO INPUT	
1U3 1TB6	TERM BLOCK MICRO INPUT	65,66
1TB5	TERM BLOCK CONTROL PANEL	
1U1	RELAY OUTPUT MODULE	SHEET 2
1U1 K1,2	FREE COOLING RELAYS	38,80
1U1 K9	PURGE RELAY	40
1U1 K6	COND WATER PUMP RELAY	82
1U1 K4	ALARM RELAY	86
1U1 K3	HEAD RELIEF RELAY	88
1U1 Q7	VANES OPEN	34
1U1 Q8	VANES CLOSED	35
1U2	POWER SUPPLY OUTPUT MOD	SHEET 2
1U2 K1	RESET RELAY	18
1U2 K2	STOP RELAY	18
1U2 K3	OVERLOAD RELAY	18
1U2 K4	COMPR START RELAY	18
1U2 K5	COMPR.START RELAY	20
1U2 K6	COMPR. TRANSITION RELAY	20
1U2 K8	OIL HEATER RELAY	28
1U2 K7	OIL PUMP RELAY	31
1U3	MICRO MODULE	SHEET 2
2CB1	STARTER CIRCUIT BREAKER	1,2,3
2F1,2,3	PRIMARY STARTER FUSE	3,7,11
2K1-3	STARTER CONTACTOR	21,22
3K3	SHORTING CONTACTOR	19
2K4	TRANSITION CONTACTOR	20
2K5	STARTER RELAY	18
2M3,4,5	VOLT METER	9,11,12
2M6,7,8	AMP METER	3,7,11
2R1-3	TRANSITION RESISTOR	2,8,10
2T1-3	CURRENT TRANSFORMERS	2,8,10
2T4	CONTROL POWER TRANSFORMERS	14
2T5-8	CURRENT TRANSFORMERS	4,7,11
2TB1	CONTROL TERMINAL BLOCK	
2TB2	LINE TERMINAL BLOCK	1,2,3
3B4	PURGE MOTOR	40
3DL1	PURGE RUN DELAY TIMER	42
3K3	PURGE SWITCH RELAY	40
3L1	PURGE SOLENOID VALVE	41

(Continued from previous page)

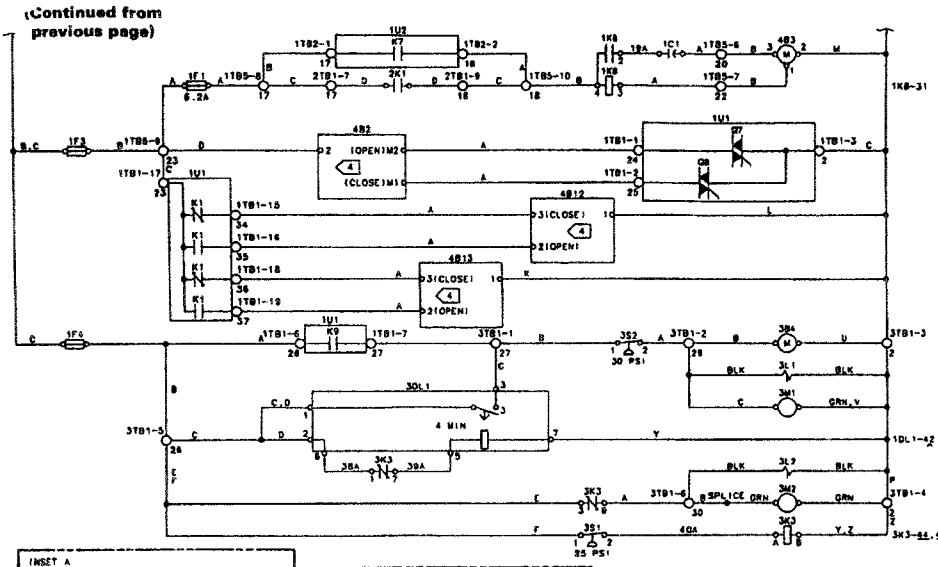

3L9	PURGE BLEED VALVE	44
3M1	PURGE HOUR METER	42
3M3	PURGE CYCLE COUNTER	45
3S2	PRESS SWITCH BREWD RUN	46
4B1	COMPRESSOR MOTOR	5
4B1R2,3,4	RESISTOR TEMP SENSOR	73,74,75
4B2	VANE ACTUATOR MOTOR	34
4B3	OIL PUMP MOTOR	31
4B12	LIQUID LINE VALVE	30
4B13	GAS LINE VALVE	30
4HR1	OIL TANK HEATER	28
4RT1-9	THERMISTOR	69,67,78 73,77,80
5K1	CHWD WATER PUMP CONT. AUX	
5K2	COND WATER PUMP CONT. AUX	82
5S2	CHWD WATER FLOW SWITCH	24
5S3	COND WATER FLOW SWITCH	26
5S4	RUN SPARE FALT SWITCH	67

NOTES:

1. UNLESS OTHERWISE NOTED, ALL SWITCHES ARE SHOWN AT 25°C (77°F) AT ATMOSPHERIC PRESSURE, AT 50% RELATIVE HUMIDITY, WITH ALL UTILITIES TURNED OFF AND AFTER A NORMAL SHUTDOWN HAS OCCURED.
2. SOLID LINES INDICATE TRANE WIRING, DASHED LINES INDICATE FIELD WIRING. PHANTOM LINES INDICATE OPTIONAL FEATURES.
3. NUMBERS ALONG THE RIGHT SIDE OF THE SCHEMATIC DESIGNATE THE LOCATION OF THE CONTACTS BY LINE NUMBER. AN UNDERLINED NUMBER INDICATES A NORMALLY CLOSED CONTACT. AN OPEN ARROWHEAD BELOW THE LINE NUMBER POINTING UPWARD INDICATES A TIMED CONTACT WHICH BEGINS TIMING WHEN ENERGIZED.

(4) SEE INSET D FOR TYPICAL INTERNAL WIRING OF ACTUATOR.

(5) 575/600 VOLT PRIMARY SHOWN. SEE INSET A FOR OTHER VOLTAGES.

(6) OPTIONAL AMP METERS SHOWN. IF NOT REQUIRED SEE INSET B. WIRE NO.S 302A, 304A AND 308A ARE NOT REQUIRED.

(7) RESISTOR SHOWN FOR 200/208V AND 200-400 RLA. FOR OTHER VOLTAGES AND RLA SEE INSET C.

(8) SEE SERVICE MANUAL FOR INDIVIDUAL SECONDARY VOLTAGES.

(9) THREE PHASE POWER SUPPLY VOLTAGE SEE UNIT NAMEPLATE.

(10) 20A FOR 200/208V-10A FOR 440/460V 480 OR 8A FOR 575/600V.

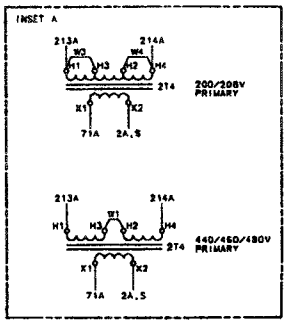

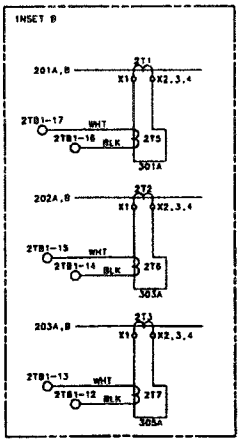

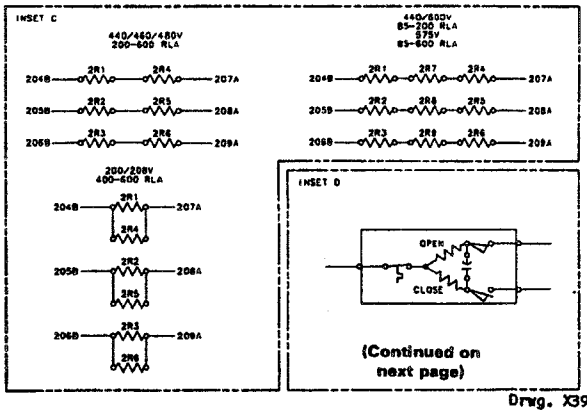

(Continued on next page)

WARNING
DISCONNECT ELECTRICAL POWER SOURCE TO PREVENT INJURY OR DEATH FROM ELECTRICAL SHOCK

CAUTION
Use copper conductors only to prevent equipment damage

Drwg. X39470442A

CVHE-M-3

Figure 7 (concluded)

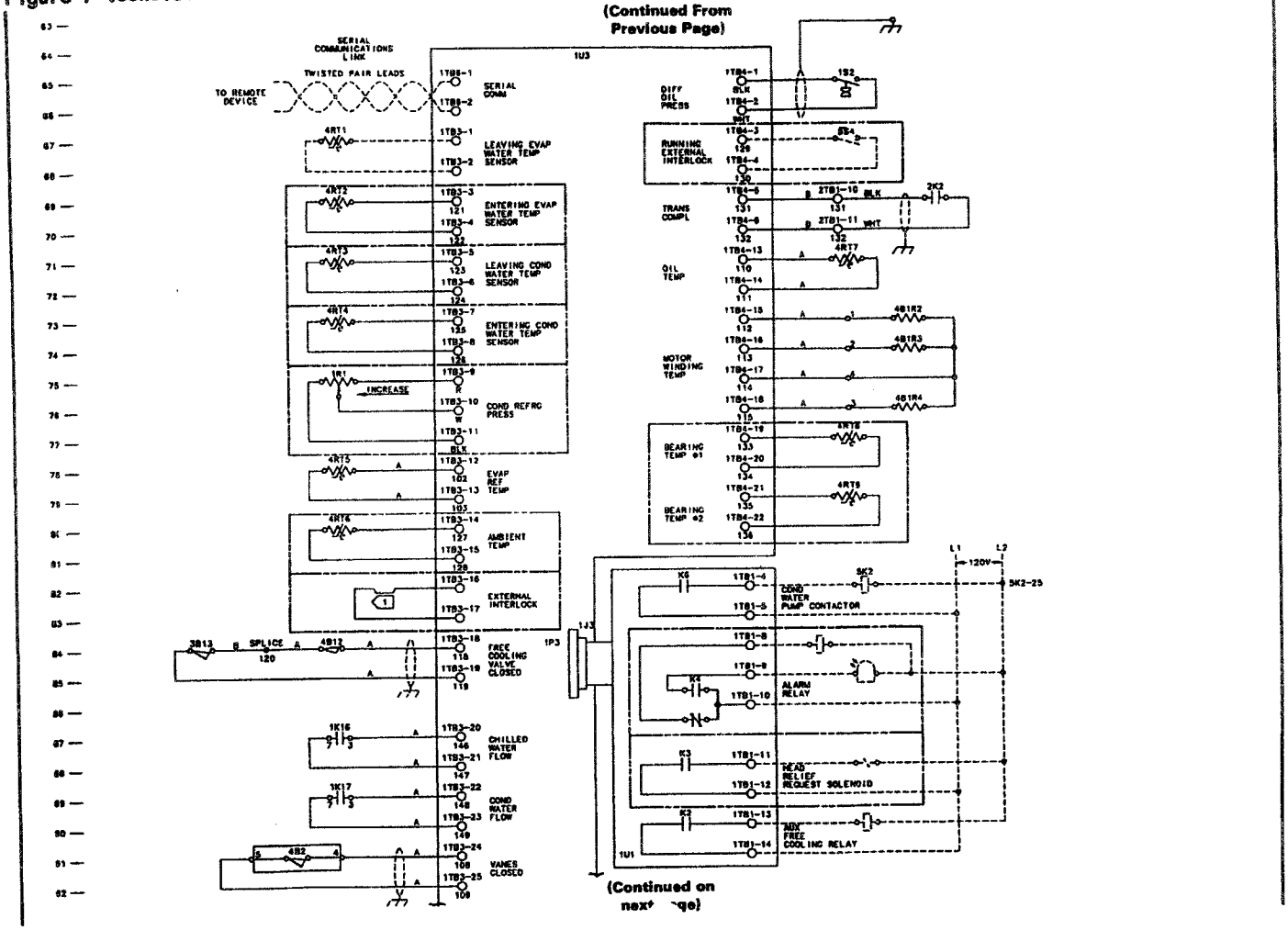

(Continued from previous page)

WARNING
DISCONNECT ELECTRICAL POWER SOURCE TO PREVENT INJURY OR DEATH FROM ELECTRICAL SHOCK

CAUTION
Use copper conductors only to prevent equipment damage

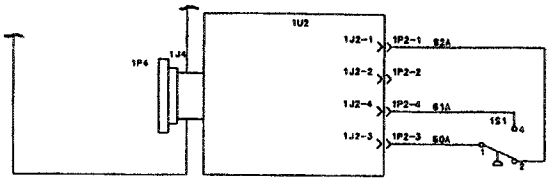

NOTES:
1. TERMINALS 1TB3-16 AND 1TB3-17 MUST BE JUMPERED IF EXTERNAL INTERLOCK IS NOT USED.
2. MANUEL RESET IS ACCOMPLISHED BY MOVING THE CHILLER SWITCH FROM "STANDBY/RESET" TO "AUTO".

CHILLER

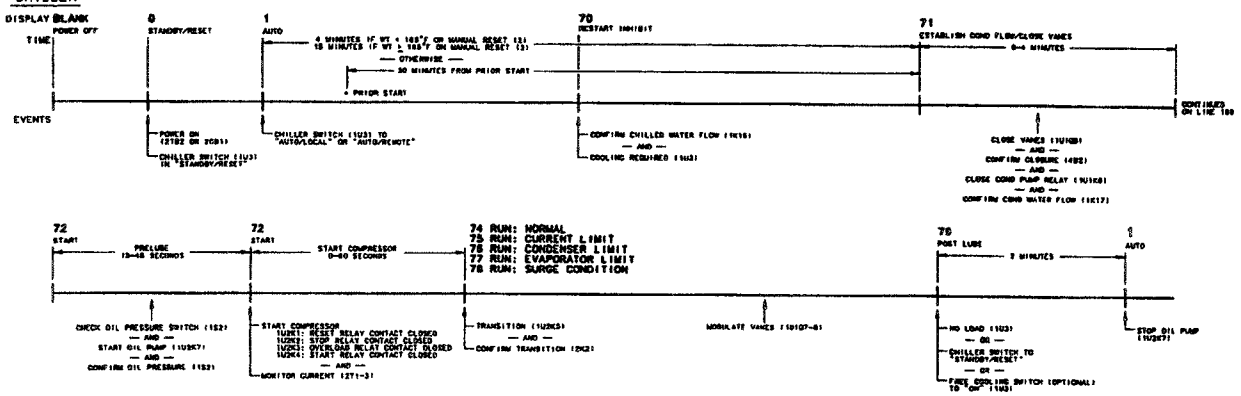

PURGE

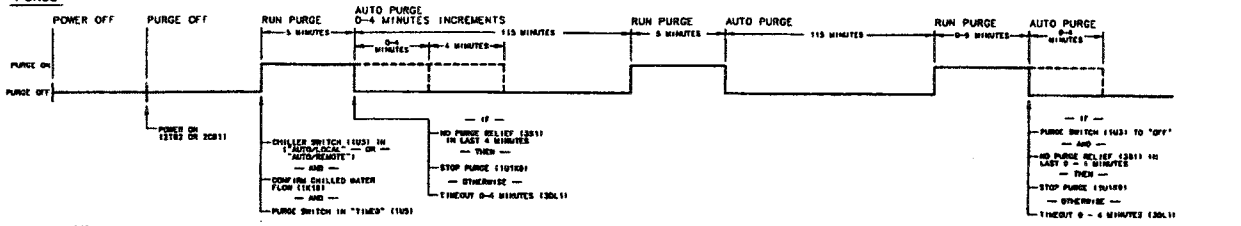

X39470443-01B

Drwg. X39470443B

Figure 8
Electrical Schematic for CVHEs w/Free Cooling and Typical, Remote Y-Delta Starters

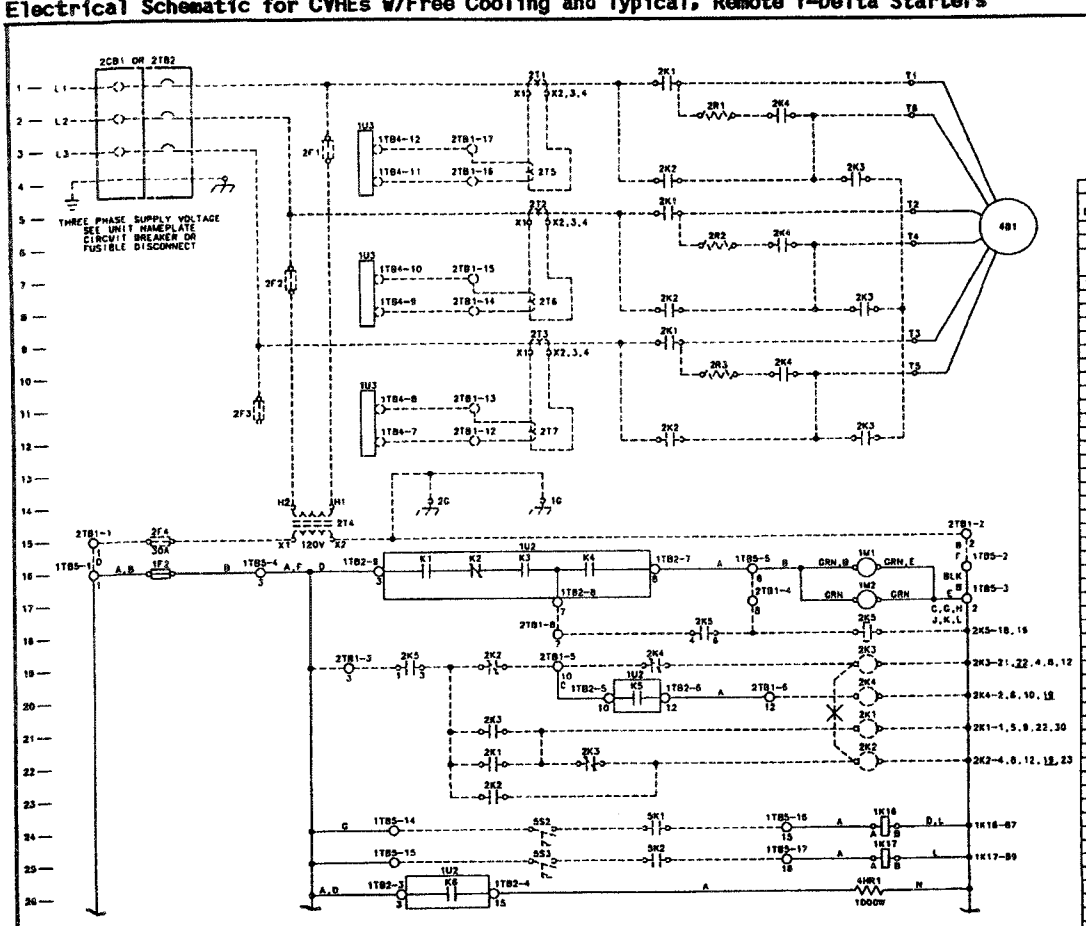

DEVICE PREFIX LOCATION CODE	
AREA	LOCATION
1	CONTROL PANEL
2	STARTER PANEL
3	PURGE
4	EXTERNAL MOUNTED *
5	CUSTOMER PROVIDED

LEGEND

DEVICE DESIGNATION	DESCRIPTION	LINE NUMBER
1C1	CAPACITOR, OIL PUMP	31
1F1	FUSE, OIL PUMP	32
1F2-5	BRANCH CIRCUIT FUSE	10,34 40,27
1J1-4/1P1-4	POST HEADER POWER SUPPLY	29,85,84
1K8	OIL PUMP STARTER RELAY	32
1K16	COND WTR PUMP RELAY	24
1K17	COND WTR PUMP RELAY	25
1M1	HOUR METER	16
1M2	START METER	17
1R1	RESISTOR PRESS TRANSDUCER	75
1S1	COND. HIGH PRESS SWITCH	95
1S2	DIFFERENTIAL PRESS SWITCH	65
1T1	POWER SUPPLY TRANSFORMER	27
1U1 1TB1	TERM BLOCK REL OUTPUT	
1U2 1TB2	TERM BLOCK POWER SPLY	
1U3 1TB3	TERM BLOCK MICRO INPUT	
1U3 1TB4	TERM BLOCK MICRO INPUT	
1TB5	TERM BLOCK CONTROL PANEL	
1U3 1TB6	TERM BLOCK MICRO INPUT	85,86
1U1	RELAY OUTPUT MODULE	SHEET 2
1U1 K1,2	FREE COOLING RELAYS	36,80
1U1 K8	PURGE RELAY	40
1U1 K6	COND WATER PUMP RELAY	82
1U1 K4	ALARM RELAY	88
1U1 K3	HEAD RELIEF RELAY	88
1U1 Q7	VANES OPEN	34
1U1 Q8	VANES CLOSED	35
1U2	POWER SUPPLY OUTPUT MOD	SHEET 2
1U2 K1	RESET RELAY	16
1U2 K2	STOP RELAY	16
1U2 K3	OVERLOAD RELAY	16
1U2 K4	COMPR.START RELAY	16
1U2 K5	COMPR.START RELAY	20
1U2 K6	COMPR. TRANSITION RELAY	28
1U2 K8	OIL HEATER RELAY	29
1U2 K7	OIL PUMP RELAY	31
1U3	MICRO MODULE	SHEET 2
2CB1	STARTER CIRCUIT BREAKER	1,2,3
2F1,2,3	PRIMARY STARTER FUSE	3,7,11
2K1-2	STARTER CONTACTOR	21,22
2K3	SHORTING CONTACTOR	18
2K4	TRANSITION CONTACTOR	20
2K5	STARTER RELAY	18
2R1-9	TRANSITION RESISTOR	2,6,10
2T1-3	CURRENT TRANSFORMERS	2,6,10
2T4	CONTROL POWER TRANSFORMERS	14
2T5-9	CURRENT TRANSFORMERS	4,7,11
2TB1	CONTROL TERMINAL BLOCK	
2TB2	LINE TERMINAL BLOCK	1,2,3

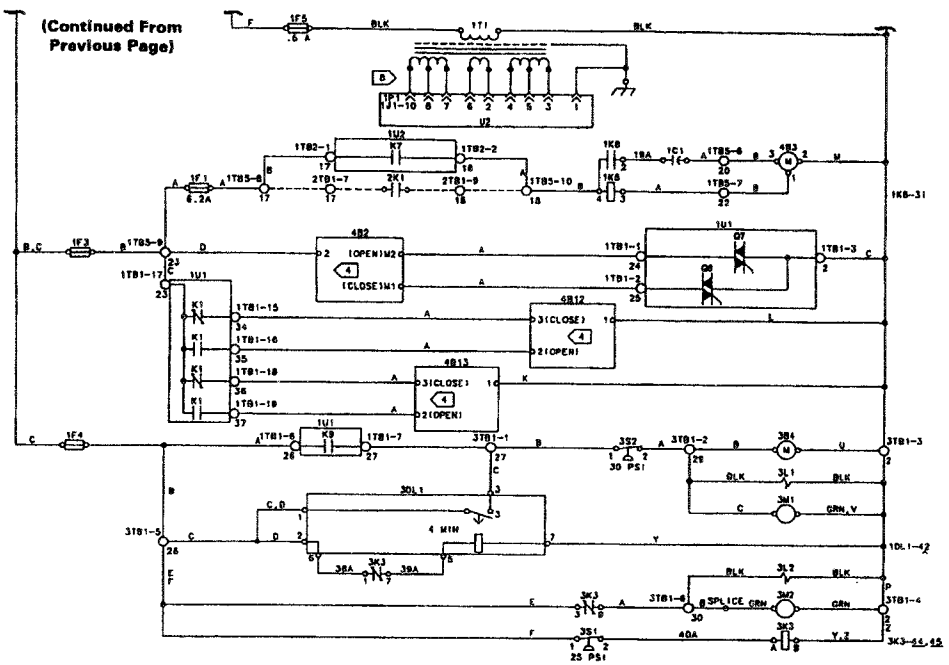

3B4	PURGE MOTOR	40
3DL1	PURGE RUN DELAY TIMER	42
3K3	PURGE SWITCH RELAY	46
3L1	PURGE SOLENOID VALVE	41
3L2	PURGE BLEED VALVE	44
3M1	PURGE HOUR METER	42
3M2	PURGE CYCLE COUNTER	43
3S1	PRESS SWITCH EXTEND RUN	46
3S2	PRESS SWITCH SAFTY	40
4B1	COMPRESSOR MOTOR	8
4B1R2,3,4	RESISTOR TEMP SENSOR	73,74,75
4B2	VANE ACTUATOR MOTOR	34
4B3	OIL PUMP MOTOR	31
4B12	LIQUID LINE VALVE	36
4B13	GAS LINE VALVE	38
4HR1	OIL TANK HEATER	28
4RT1-9	THERMISTOR	68,67,70 73,77,69
5K1	CHWD WATER PUMP CONT. AUX	81
5K2	COND WATER PUMP CONT. AUX	82
5S2	CHWD WATER FLOW SWITCH	84
5S3	COND WATER FLOW SWITCH	38
5S4	RUN SPARE FALT SWITCH	87

NOTES:

1. UNLESS OTHERWISE NOTED, ALL SWITCHES ARE SHOWN AT 25°C (77°F), AT ATMOSPHERIC PRESSURE, AT 50% RELATIVE HUMIDITY, WITH ALL UTILITIES TURNED OFF AND AFTER A NORMAL SHUTDOWN HAS OCCURED.
2. SOLID LINES INDICATE FRAME WIRING. DASHED LINES INDICATE FIELD WIRING. PHANTOM LINES INDICATE OPTIONAL FEATURES.
3. NUMBERS ALONG THE RIGHT SIDE OF THE SCHEMATIC DESIGNATE THE LOCATION OF THE CONTACTS BY LINE NUMBER. AN UNDERLINED NUMBER INDICATES A NORMALLY CLOSED CONTACT. AN OPEN ARROWHEAD BELOW THE LINE NUMBER POINTING UPWARD INDICATES A TIMED CONTACT WHICH BEGINS TIMING WHEN ENERGIZED.

4 SEE INSET D FOR TYPICAL INTERNAL WIRING OF ACTUATOR.

8 SEE SERVICE MANUAL FOR INDIVIDUAL SECONDARY VOLTAGES.

9 THREE PHASE POWER SUPPLY VOLTAGE SEE UNIT NAMEPLATE.

10. REMOTE Y-Δ STARTER SHOWN. WIRING BETWEEN CONTROL PANEL AND STARTER REMAIN SIMILAR FOR VARIOUS TYPES OF STARTERS. SEE STARTER MANUFACTURERS WIRING DIAGRAM FOR SPECIFIC STARTER WIRING

WARNING
DISCONNECT ELECTRICAL POWER SOURCE TO PREVENT INJURY OR DEATH FROM ELECTRICAL SHOCK

CAUTION
Use copper conductors only to prevent equipment damage

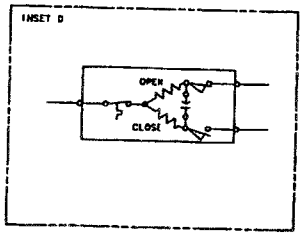

(Continued on next page)

Drwg. X39470444A

Figure 8 (concluded)

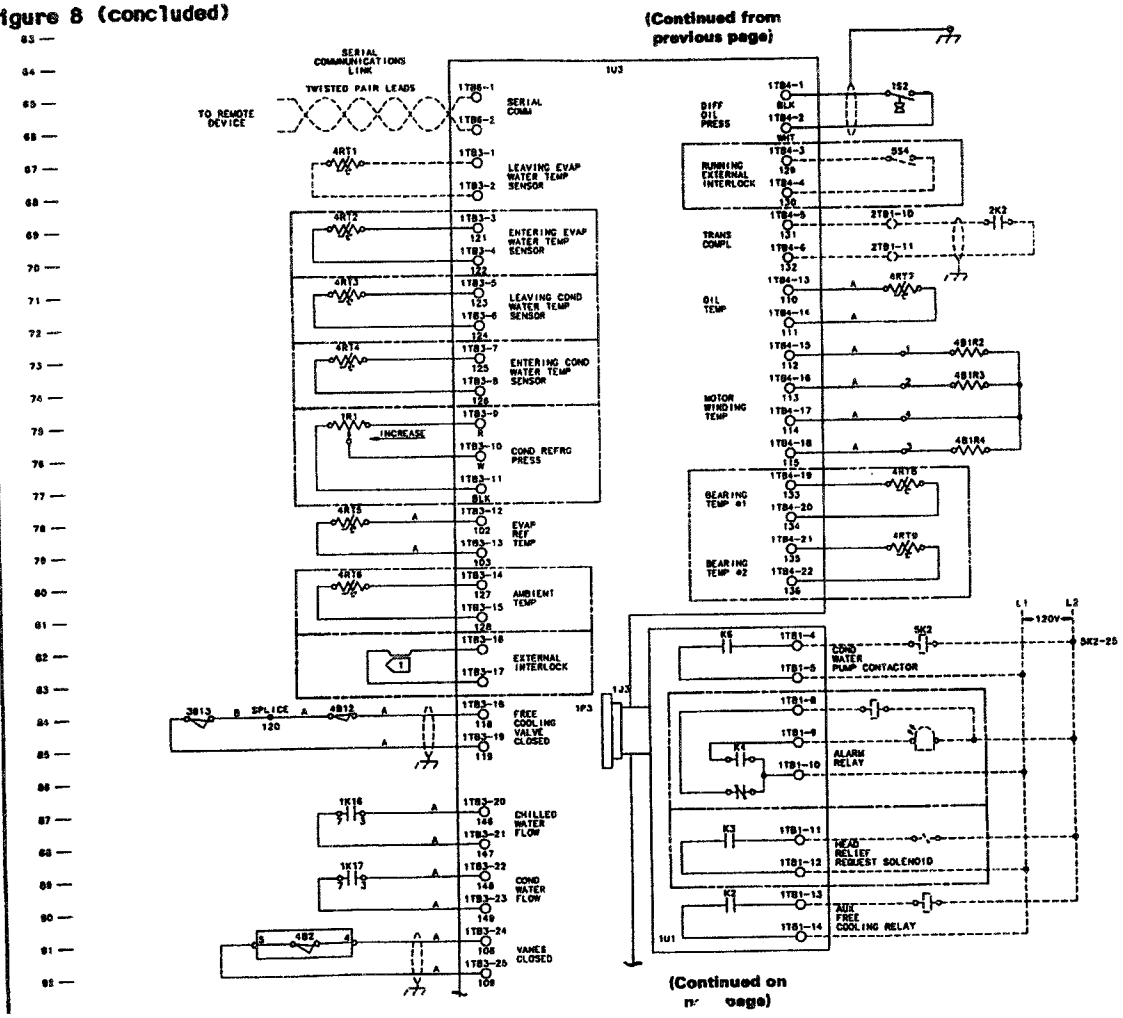

(Co..ued from previous page)

WARNING
DISCONNECT ELECTRICAL POWER SOURCE TO PREVENT INJURY OR DEATH FROM ELECTRICAL SHOCK

CAUTION
Use copper conductors only to prevent equipment damage

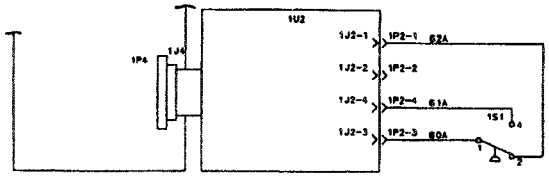

NOTES:
1. TERMINALS 1TB3-16 AND 1TB3-17 MUST BE JUMPERED IF EXTERNAL INTERLOCK IS NOT USED.
2. MANUAL RESET IS ACCOMPLISHED BY MOVING THE CHILLER SWITCH FROM "STANDARD/RESET" TO "AUTO".

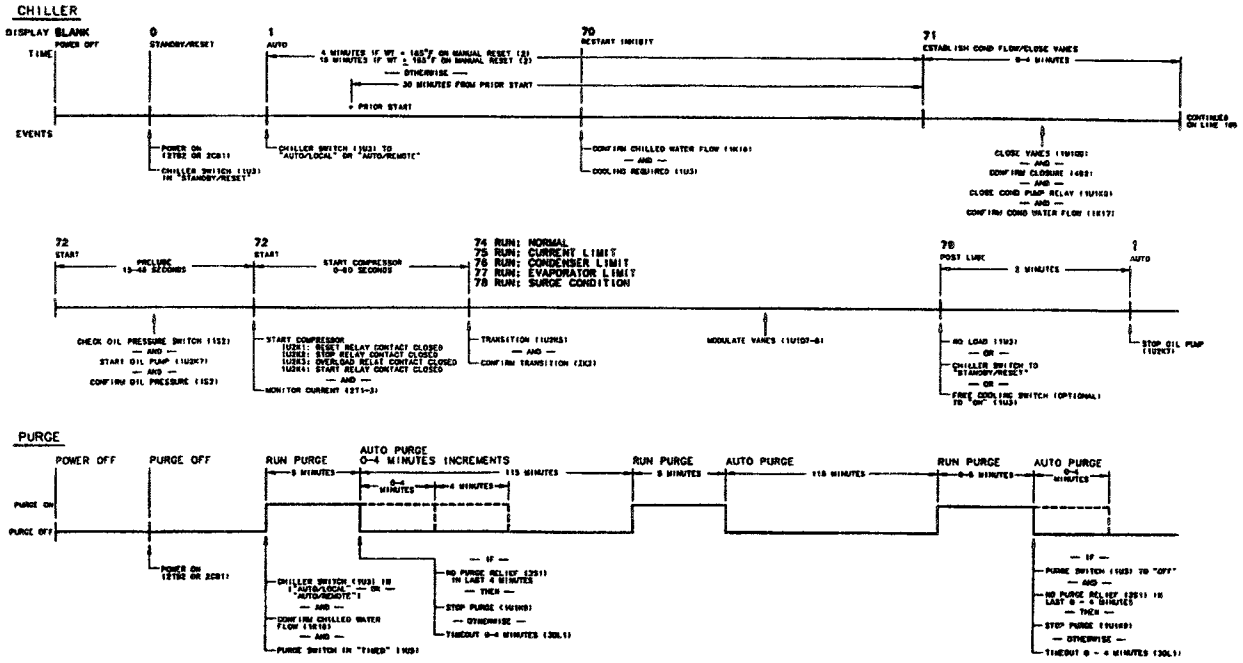

X39470445-01B

Drwg. X39470445B

Figure 9
Standard Unit Electrical Connections

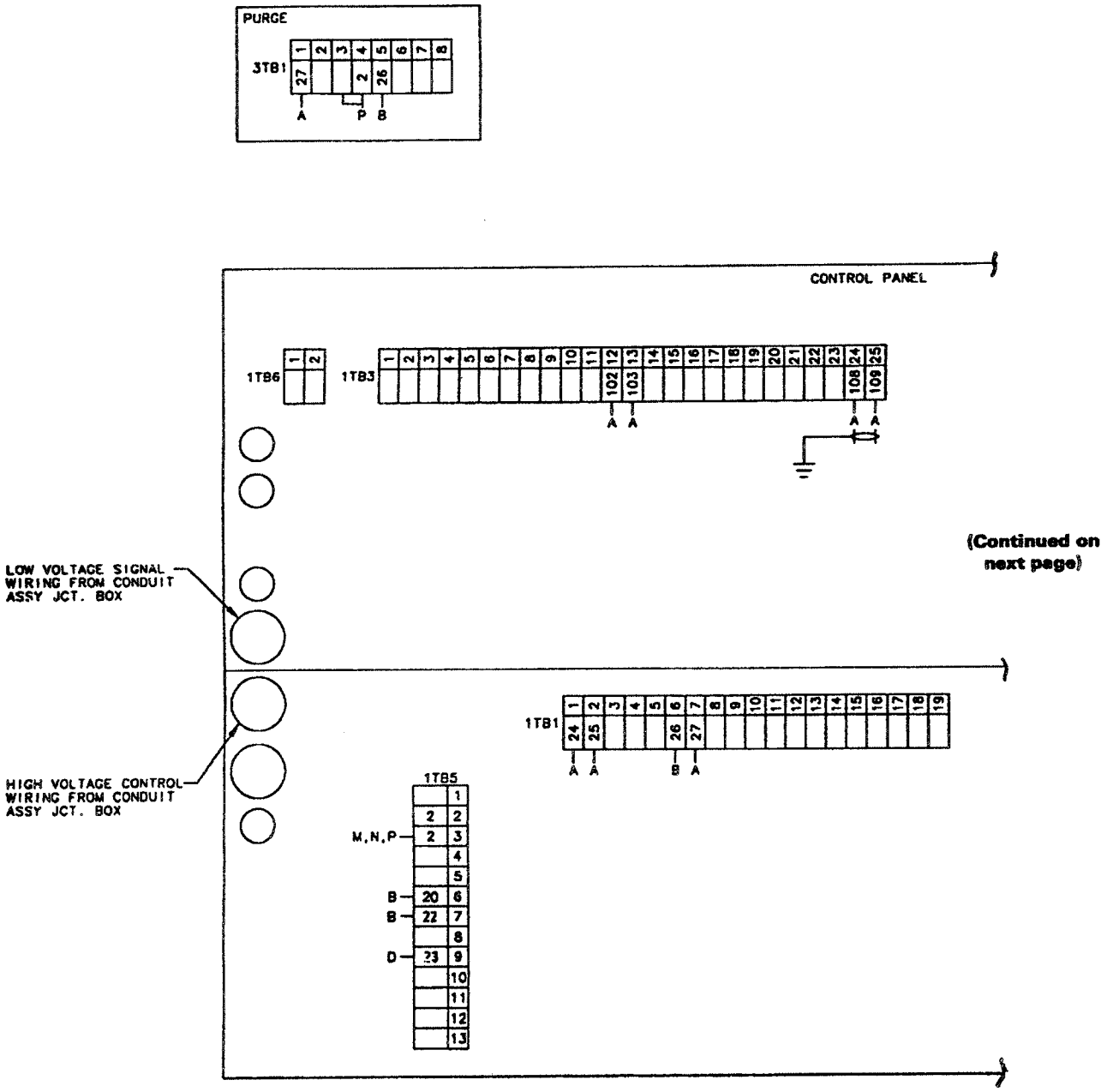

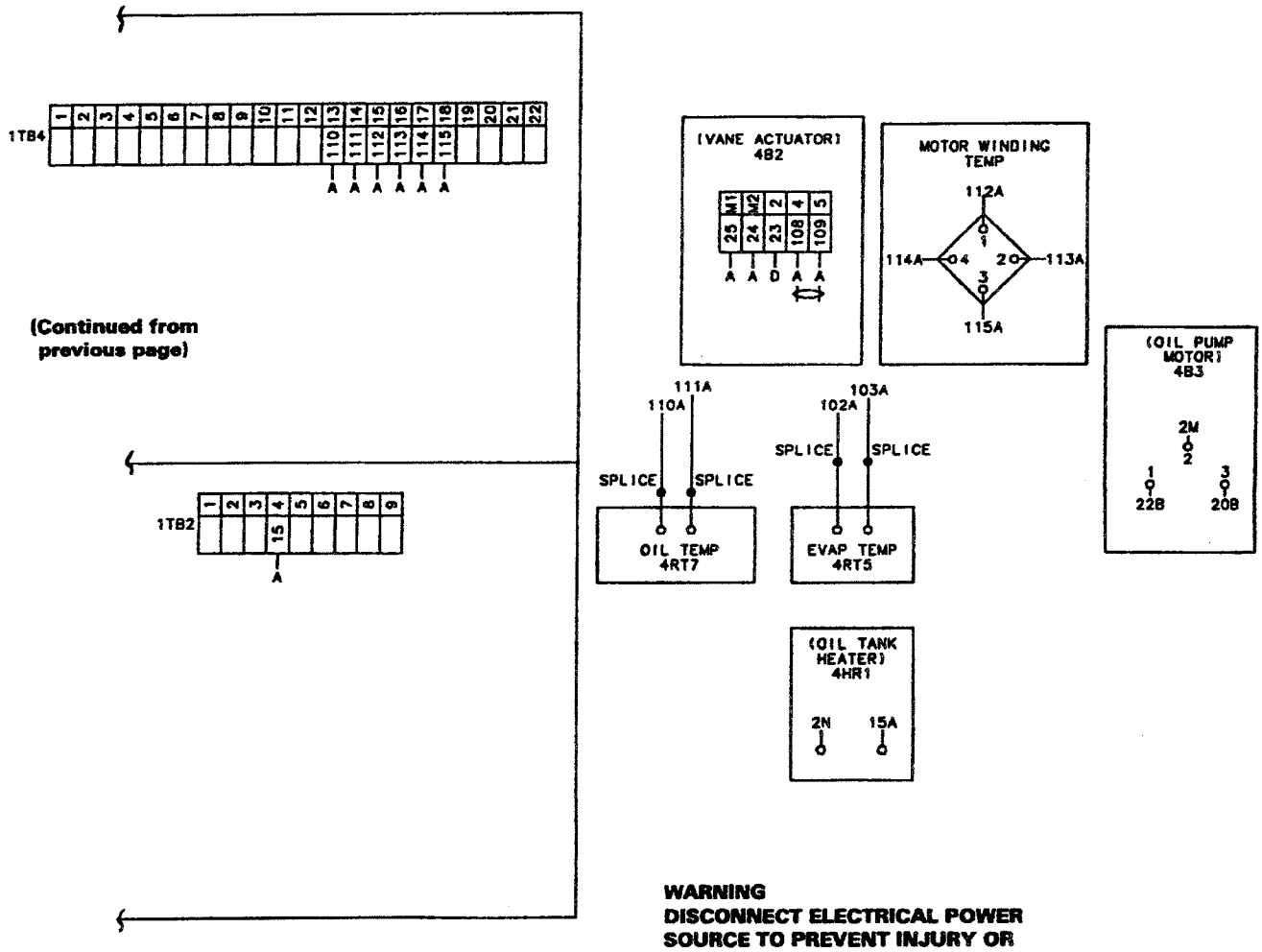

WARNING
DISCONNECT ELECTRICAL POWER SOURCE TO PREVENT INJURY OR DEATH FROM ELECTRICAL SHOCK

CAUTION
Use copper conductors only to prevent equipment damage

Drwg. X39470426C

Figure 10
Control Panel Electrical Connections for Standard Units

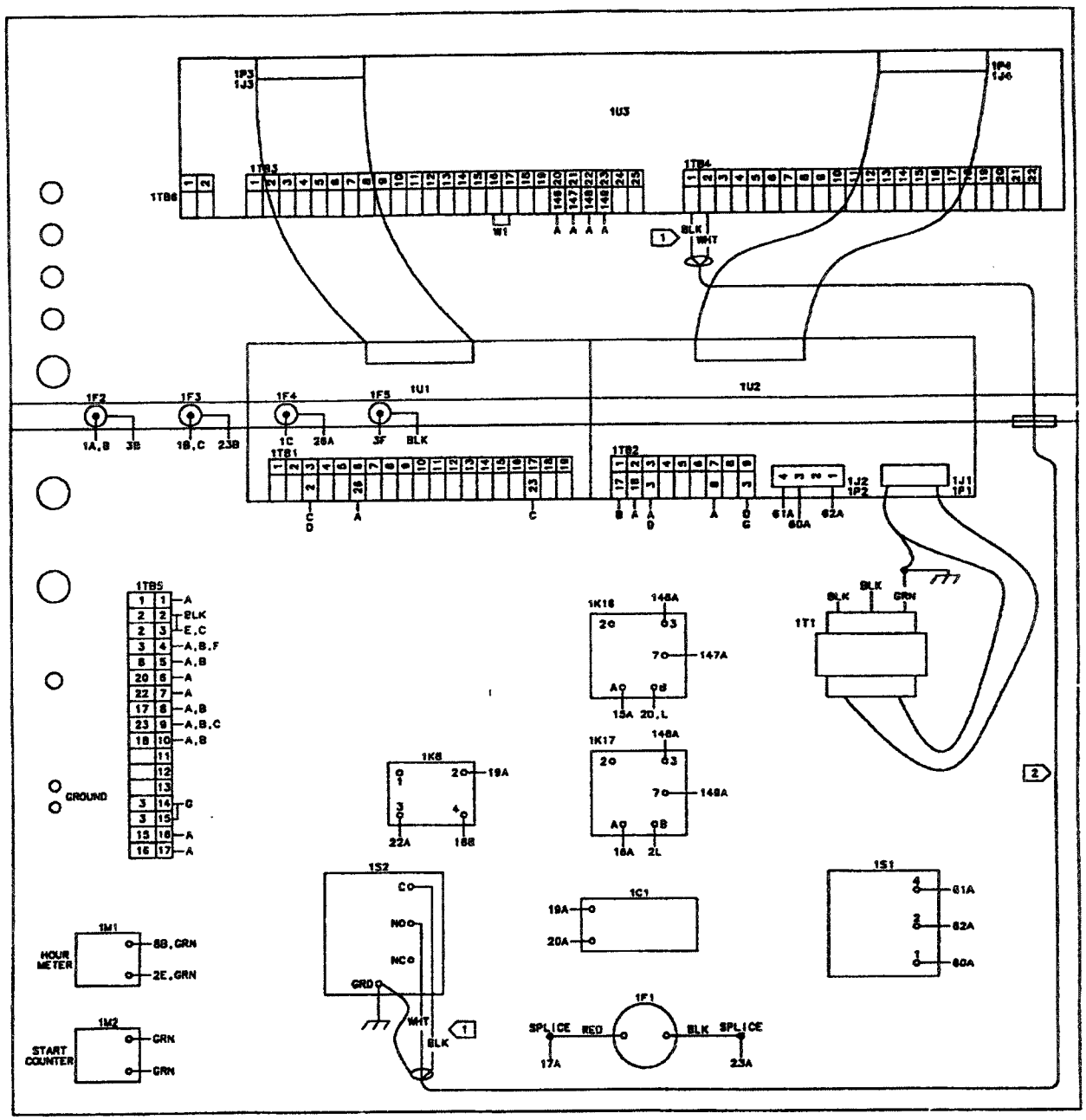

NOTE:
1. WIRES WHT AND BLK ARE IN SHIELDED CABLE.
2. WIRING IS LOW VOLTAGE SIGNAL WIRING AND MUST BE ROUTED SEPERATE FROM CONTROL VOLTAGE WIRING.

WARNING
DISCONNECT ELECTRICAL POWER SOURCE TO PREVENT INJURY OR DEATH FROM ELECTRICAL SHOCK

CAUTION
Use copper conductors only to prevent equipment damage

Drwg. X39470427C

Figure 11
Control Panel Electrical Connections for Units w/Hot Gas Bypass

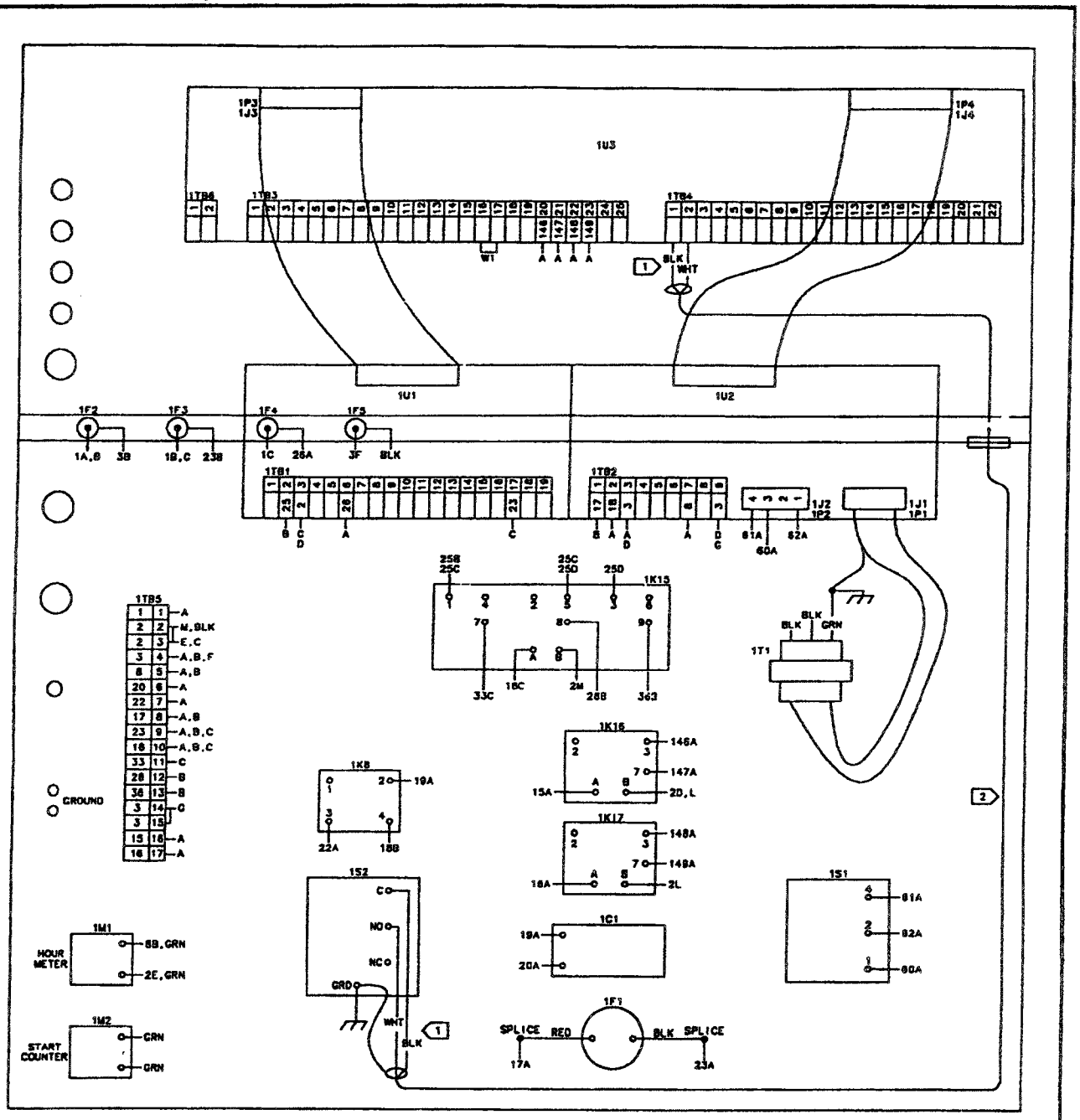

NOTE:
1. WIRES WHT AND BLK ARE IN SHIELDED CABLE.
2. WIRING IS LOW VOLTAGE SIGNAL WIRING AND MUST BE ROUTED SEPERATE FROM CONTROL VOLTAGE WIRING.

WARNING
DISCONNECT ELECTRICAL POWER SOURCE TO PREVENT INJURY OR DEATH FROM ELECTRICAL SHOCK

CAUTION
Use copper conductors only to prevent equipment damage

Drwg. X39470433C

Figure 12
Electrical Connections for Units w/Hot Gas Bypass

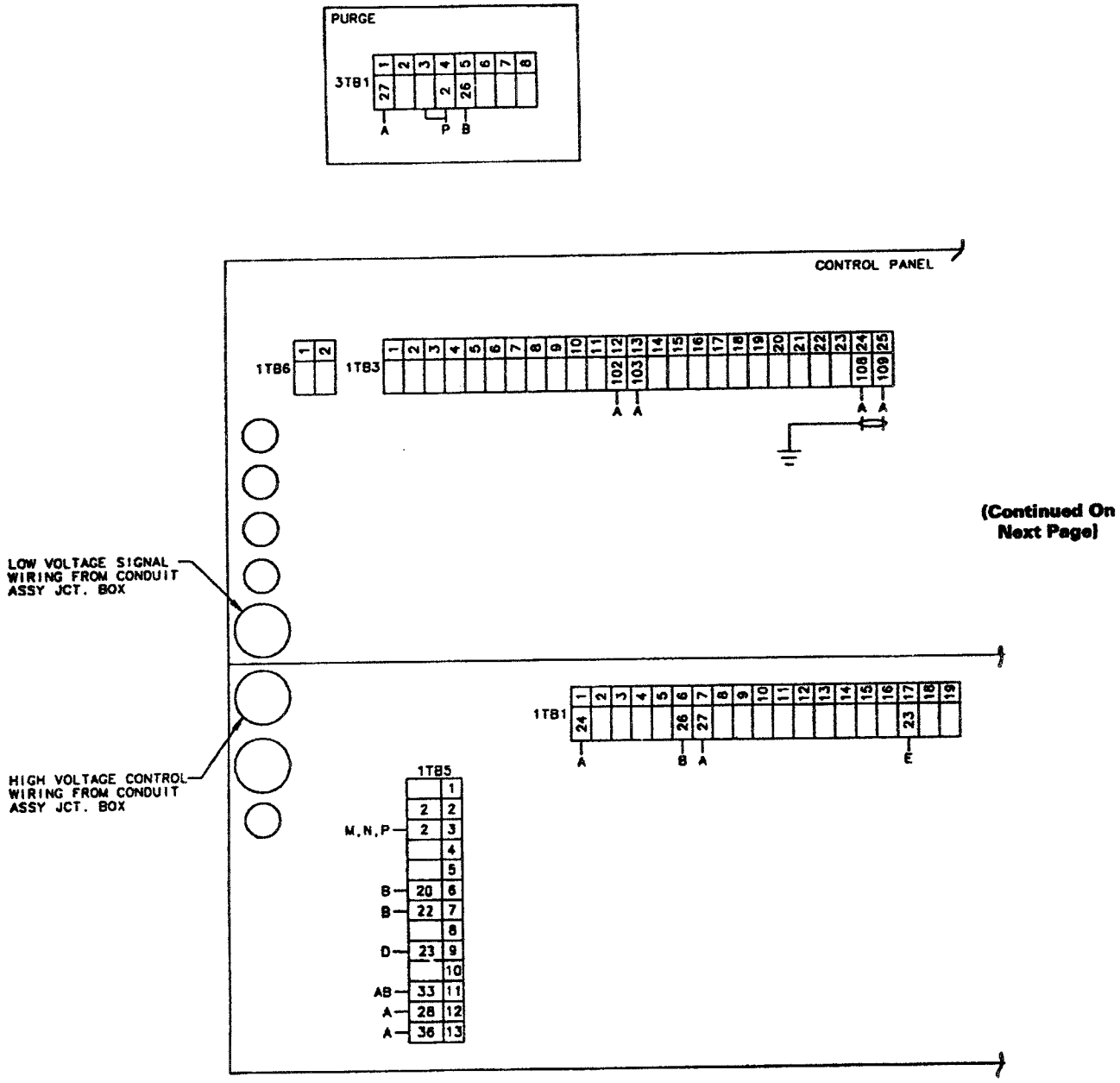

WARNING
DISCONNECT ELECTRICAL POWER SOURCE TO PREVENT INJURY OR DEATH FROM ELECTRICAL SHOCK

CAUTION
Use copper conductors only to prevent equipment damage

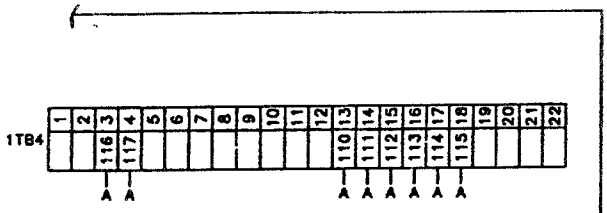

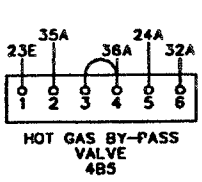

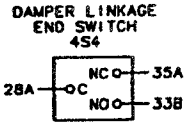

(Continued From Previous Page)

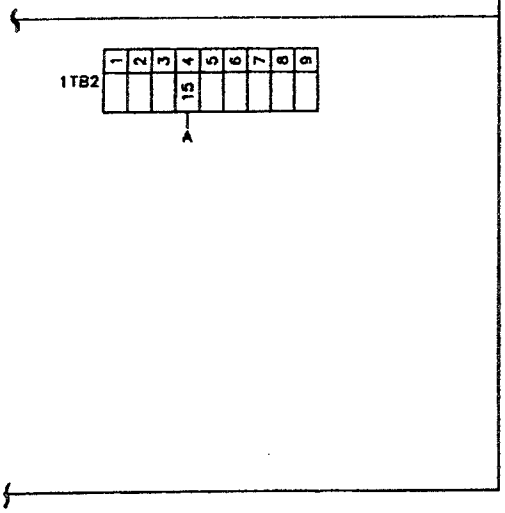

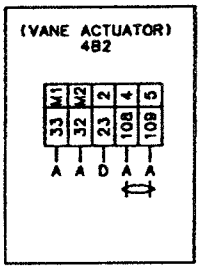

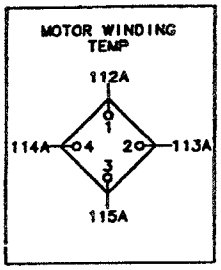

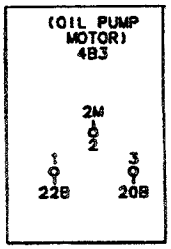

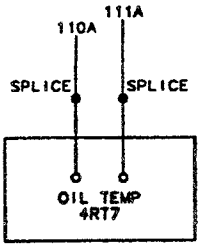

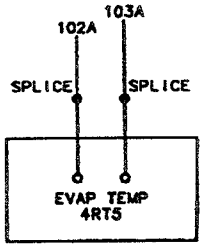

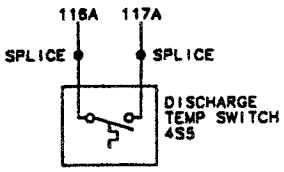

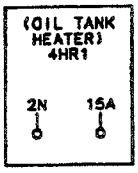

Drwg. X39470429C

Figure 13
Electrical Connections for Units w/Free Cooling

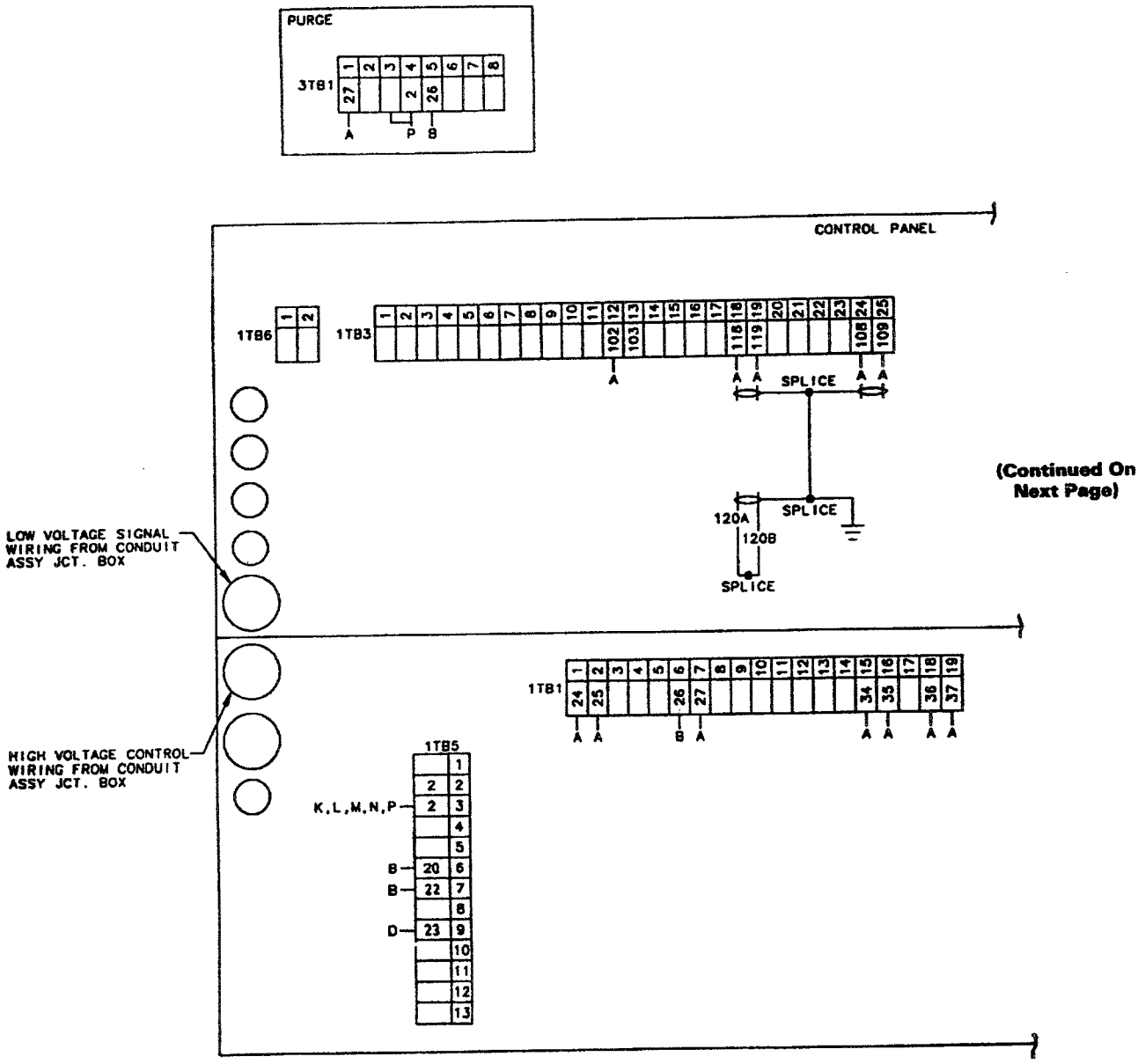

WARNING
DISCONNECT ELECTRICAL POWER SOURCE TO PREVENT INJURY OR DEATH FROM ELECTRICAL SHOCK

CAUTION
Use copper conductors only to prevent equipment damage

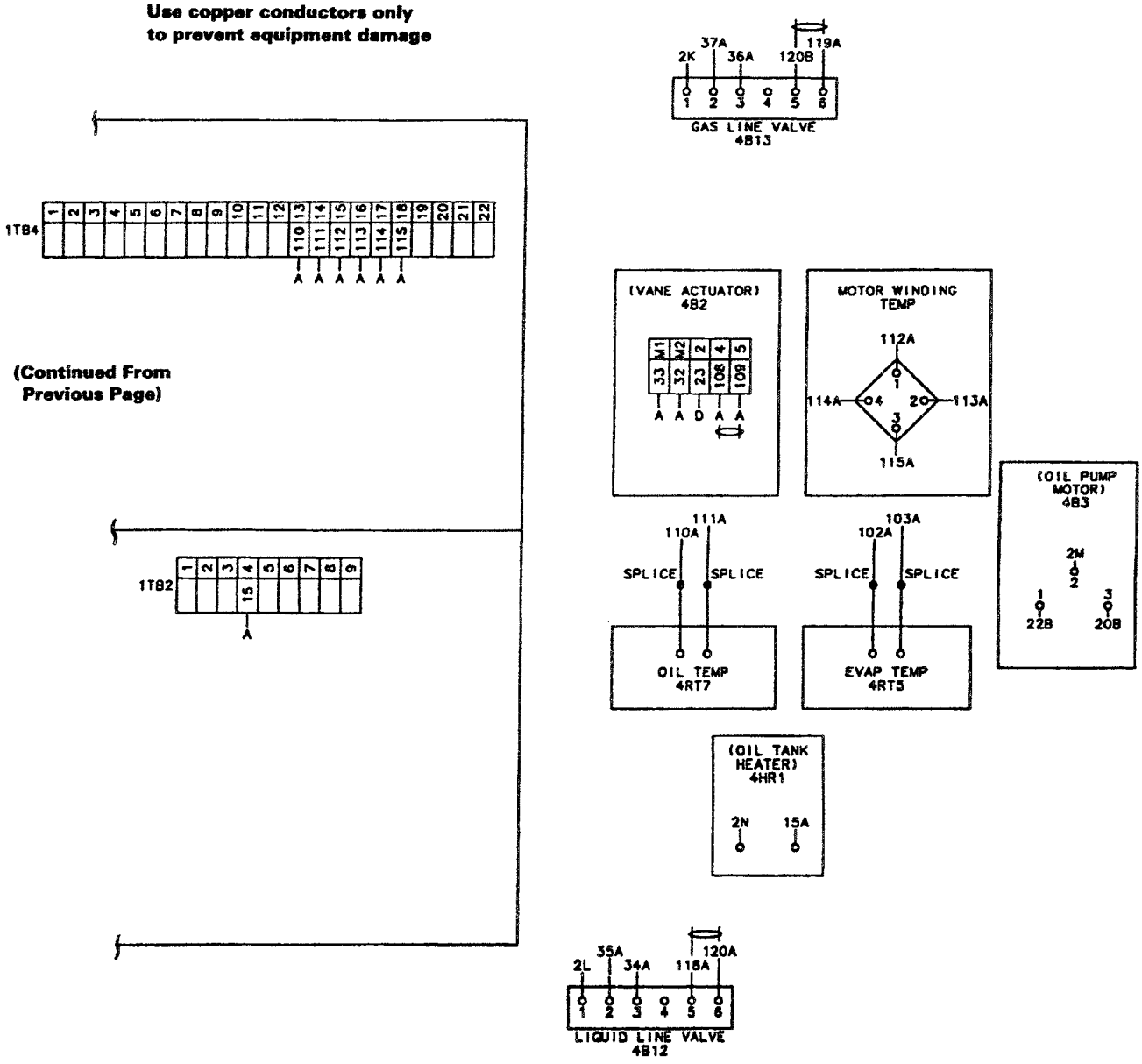

(Continued From Previous Page)

Drwg. X39470430C

Figure 14
Electrical Connections for Starter w/Micro Control

CHART A	
CURRENT RATIO	TERMINALS
150:5	X1 TO X2
175:5	X1 TO X3
200:5	X1 TO X4
250:5	X1 TO X2
300:5	X1 TO X3
350:5	X1 TO X4
400:5	X1 TO X2
500:5	X1 TO X3
600:5	X1 TO X4
700:5	X1 TO X2
800:5	X1 TO X3
1000:5	X1 TO X4
1200:5	X1 TO X2
1500:5	X1 TO X3

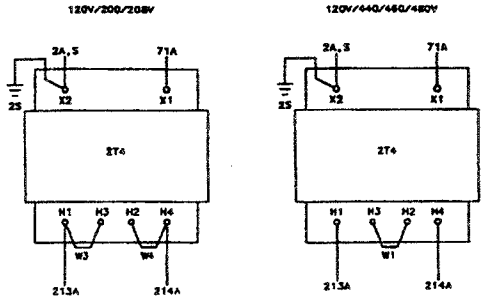

(Continued on next page)

NOTES

1. SEE DETAIL "A".
2. WIRES WHT AND BLK ARE INSHIELDED CABLE.

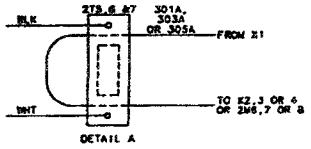

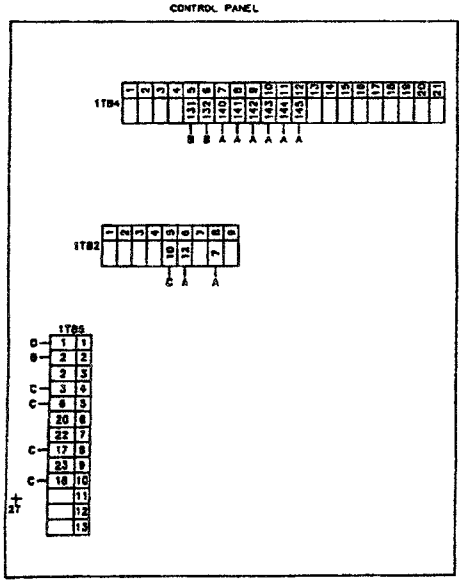

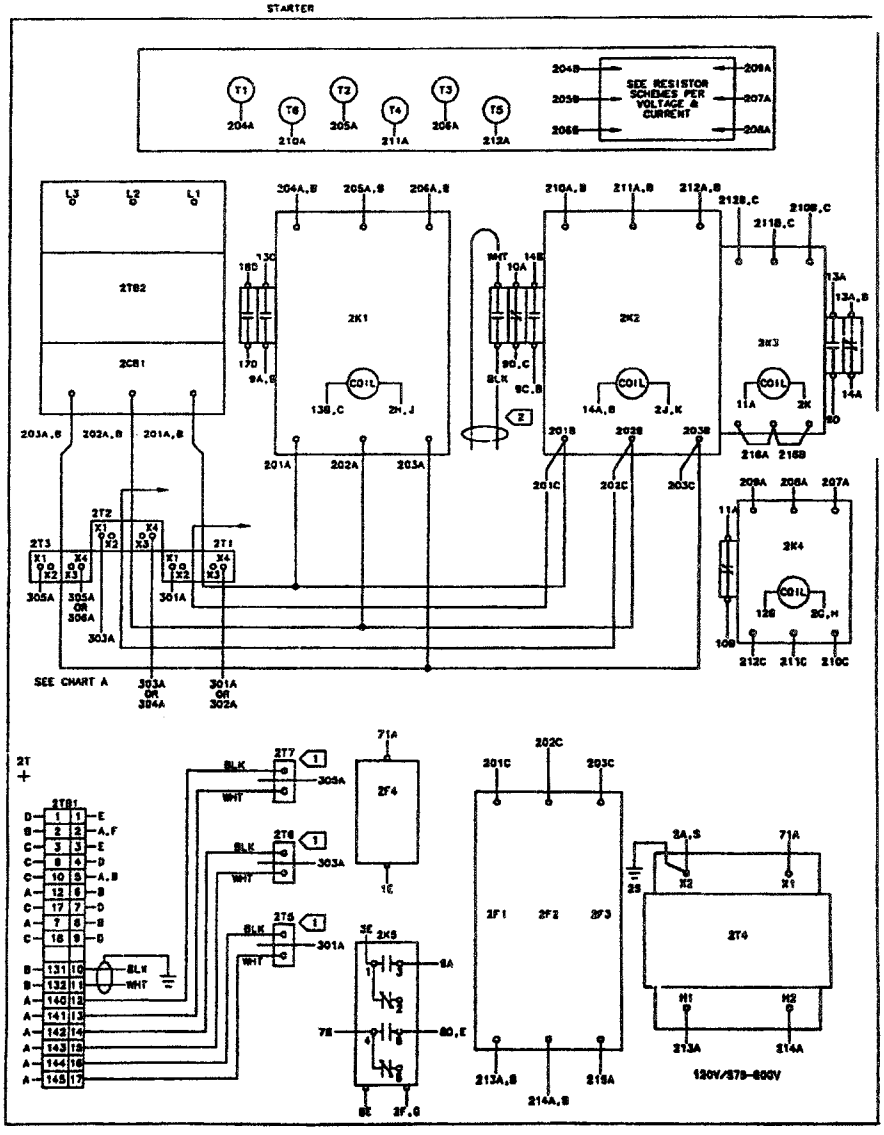

(Continued from previous page)

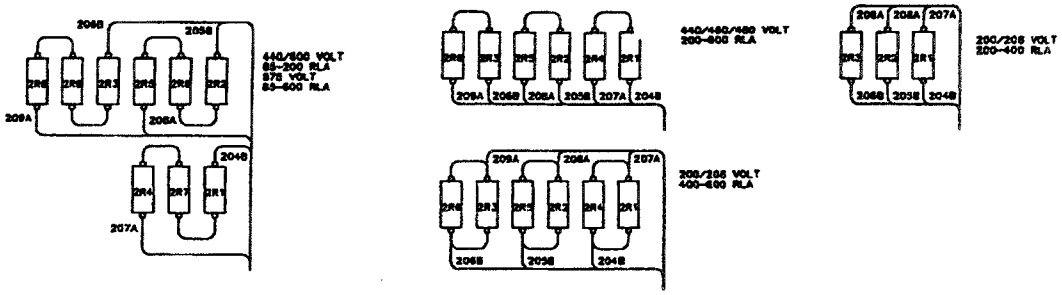

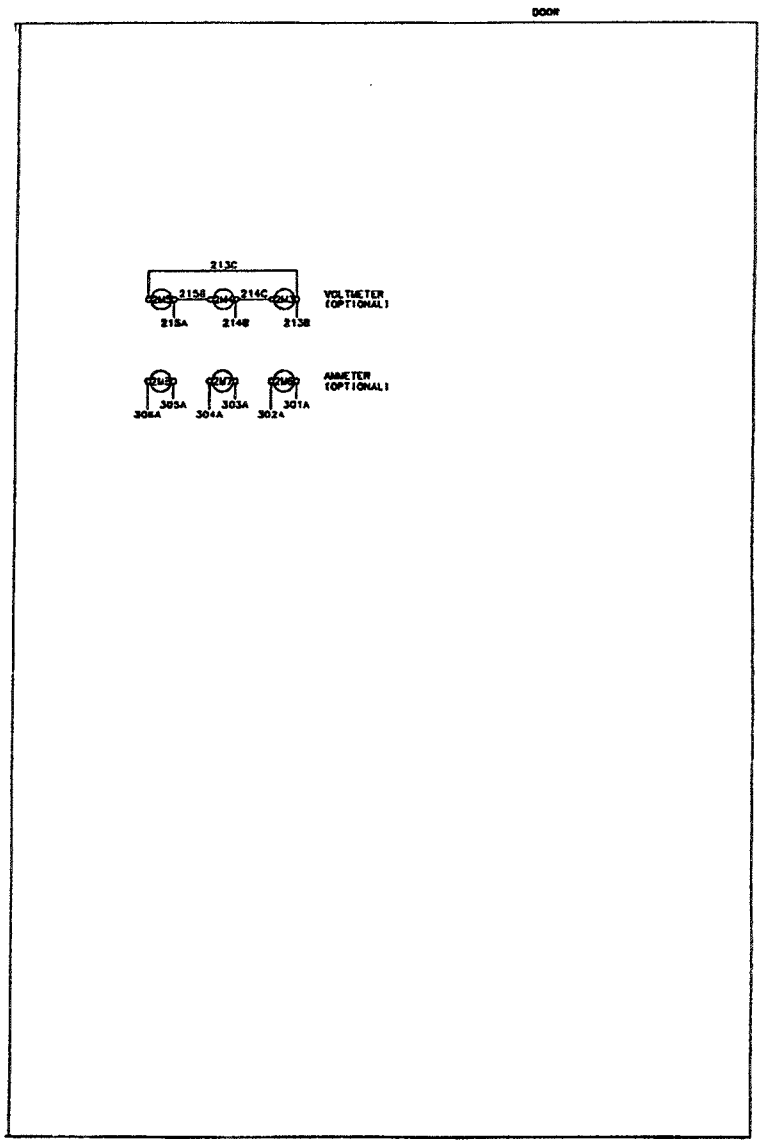

WARNING
DISCONNECT ELECTRICAL POWER SOURCE TO PREVENT INJURY OR DEATH FROM ELECTRICAL SHOCK

CAUTION
Use copper conductors only to prevent equipment damage

Drwg. X39470405B

For further information on this product or other Trane products, refer to the "Trane Service Literature Catalog", ordering number IDX-IOM-1. This catalog contains listings and prices for all service literature sold by Trane. The catalog may be ordered by sending a $20.00 check to: The Trane Company, Service Literature Sales, 3600 Pammel Creek Road, La Crosse, WI 54601.

PRINTED BY PRODUCTION SERVICES — LA CROSSE BB/LW

Installation - General Information

CVHE-IN-9C

Library	Service Literature
Product Section	Refrigeration
Product	Centrifugal Liquid Chillers, Water-Cooled
Model	CVHE, CVHF, CVHG Cooling Only & Heat Recovery
Literature Type	General Information - Installation
Sequence	9C
Date	February 1 , 2001
File No.	SV-RF-CTV-CVHE-IN-9C-2001
Supersedes	SV-RF-CTV-CVHE-IN-9B-2000

Three manuals ship together as Installation information:

CVHE-IN-9C - General Information
CVHE-IN-10C - Water Piping
CVHE-IN-11C - Electrical

Design Sequence
CVHE "3G"
CVHF "1T"
CVHG "1J"

Water Cooled CenTraVac®

CVHE 60 HZ 230, 250, 280, 320, 360, 400, 450, 500
CVHE 50 HZ 190, 210, 240, 270, 300, 330, 370, 420
CVHF 60 HZ 350, 410, 485, 555, 640, 650, 770, 910, 1060, 1280, 1470, 1720
CVHG 50 HZ 350, 410, 480, 565, 670, 780, 1067

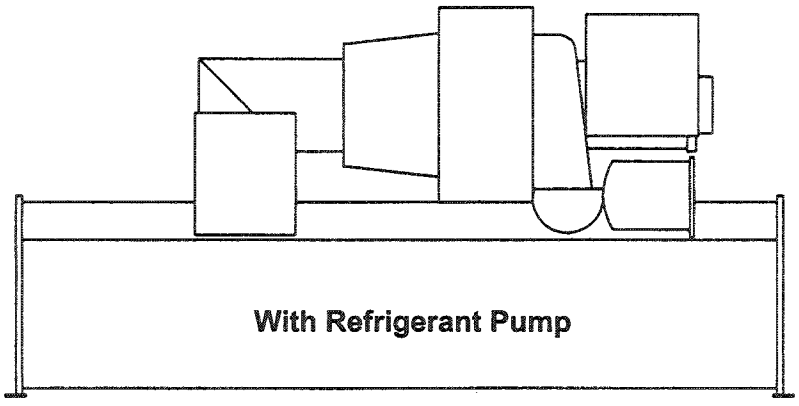

With Refrigerant Pump

X39640503-04

Since the Trane Company has a policy of continuous product and product data improvement, it reserves the right to change design and specifications without notice. Only qualified technicians should perform the installation and servicing of the equipment referred to in this publication.

Warnings and Cautions

NOTICE

Warnings and Cautions appear at appropriate locations throughout this manual. Read these carefully.

WARNING: Indicates a potentially hazardous situation which, if not avoided, could result in death or serious injury.

CAUTION: Indicates a potentially hazardous situation which, if not avoided, may result in minor or moderate injury. It may also be used to alert against unsafe practices and where property-damage-only accidents could occur.

©American Standard Inc 2001

Table of Contents

General Information		Page Number
Warnings and Cautions		2
Literature Change History		4
About this Manual		4
Product Description Block		4
Commonly Used Acronyms		4
Unit Nameplate		4
Metric Conversion		4
Responsibilities of Installing Contractor(s)		5
Unit Shipment		7
Storage		7
Recommended Unit Clearances		8
Operating Environment		8
Storage Requirements - If Chiller is Not Installed		8
Foundation Requirements		10
Rigging		16
Shipping Skid Removal		18
Chiller Isolation		19
Isolation Pads		19
Spring Isolators		19
Unit Leveling		26
Figures		**Page Number**
Typical CVHE and CVHG Chiller with Refrigerant Pump	Figure 1	9
Clearance Requirements for Cooling and Auxiliary	Figure 2	11
Clearance Requirements for Heat Recovery	Figure 3	12
Tube Bundle Locations Showing Cooling Only, Free Cooling, Heat Recovery and Auxiliary Condenser	Figure 4	13
Recommended Lifting Arrangements for CVHE, CVHF and CVHG Units	Figure 5	17
Typical Chiller Shipping Skid	Figure 6	18
Isolation Pad	Figure 7	19
Isolation Spring Placement	Figure 8	21 - 22
Chiller Foot and Isolator Orientation	Figure 9	23
Typical Spring Isolator Types and Construction	Figure 10	24 - 25
Checking Unit Levelness	Figure 11	26
Tables		**Page Number**
Installation Requirements	Table 1	6
Tube Bundle Locations for Cooling Only and Free Cooling	Table 2	14
Tube Locations for Heat Recovery and Auxiliary Condenser	Table 3	14
Typical Shipping and Operating Weights (Lbs.) for Standard Options	Table 4	14
Typical Weights for Cooling Only	Table 5	15
Isolation Pad Loading	Table 6	20

General Information

Literature Change

CVHE-IN-9C - February 2001
CVHE-IN-10C - February 2001
CVHE-IN-11C - February 2001

CVHE-IN-9B - September 2000
CVHE-IN-10B - September 2000
CVHE-IN-11B - September 2000
Supersedes:
CVHE-IN-9A - December 1999
CVHE-IN-10A - December 1999
CVHE-IN-11A - January 2000

About this Manual

This manual discusses proper installation of Models CVHE, CVHF and CVHG 50 Hz. and 60 Hz. chillers with a refrigerant pump. See Figure 1 for an example of a chiller with a refrigerant pump. The chillers are equipped with microcomputer-based control systems whether standard cooling or heat-recovery. A careful review of this information along with the submittal package provided for the unit will assure that the chiller is correctly installed.

Extended capacity is available only on models CVHF 1470 and 1720.

CVHE, CVHF and CVHG machines, as of this Revision C manual, are built only with a refrigerant pump. 032 and 050 shell size information has also been included in this manual.

Product Description Block

Trane 50 Hz and 60 Hz hermetic CenTraVac® units are defined by the product definition and selection system (PDS). Each unit is defined by the product description block which appears on the unit nameplate. An explanation of the PDS product code is provided in the unit operation and maintenance manual.

Commonly Used Acronyms

AFD = Adjustable Frequency Drive
ASME = American Society of Mechanical Engineers
ASRAE = American Society of Heating, Refrigerating and Air Conditioning Engineers

BAS = Building Automation System
LBU = La Crosse Business Unit
CABS = Auxiliary Condenser Tube-Bundle Size
CDBS = Condenser Bundle Size
CESZ = Condenser Shell Size
CWR = Chilled Water Reset

DTFL = Delta-T at Full Load (i.e., the difference between entering and leaving chilled water temperatures at design load)
EVBS = Evaporator Size
EVSZ = Evaporator Shell Size

FC = Free Cooling
GPM = Gallons-per-Minute
HGBP = Hot Gas Bypass

HVAC = Heating, Ventilating and Air Conditioning
IE = Internally Enhanced Tubes
IPC = Interprocessor Communication
PFCC = Power Factor Correction Capacitor
PSID = Pounds-per-Square-Inch Differential
UCP2 = Chiller Control Panel

Unit Nameplate

The chiller nameplate is located on the left side of the unit control panel (UCP). The following information is provided on the unit nameplate.

1. Unit model and size descriptor
2. Unit serial number
3. Unit electrical requirements are identified
4. Correct operating charge and type of refrigerant
5. Unit test pressures and maximum operating pressures
6. Installation, operation and maintenance manuals
7. Product description block (Identifies all unit components and unit "design sequence" used to order literature and make other inquiries about the unit).
8. Lists unit wiring diagrams.

Metric Conversion

For tables and charts in this manual, the following conversions apply:

In. x 2.54 = cm
Ft. x 30.48 = cm
Lbs. x .453 = kg

Responsibilities of Installing Contractor(s)

A list of the contractor responsibilities typically associated with the unit installation process is provided below. See Table 1.

1. Locate and maintain the loose parts, i.e. isolators, bulb wells, temperature sensors, flow sensors or other factory-ordered field installed options, for installation as required. Loose parts are located in the starter panel on units with factory-installed unit-mounted starters or in the motor terminal box for units with remote-mounted starters.

2. Install the machine on a foundation with flat support surfaces level within 1/16" and of sufficient strength to support concentrated loading.

3. Place manufacturer-supplied isolation pad assemblies under unit. (Use spring isolators for upper floor installations.)

4. Install the machine per applicable Trane Installation Manual.

5. Complete all water piping and electrical connections.

Note: Field-piping must be arranged and supported to avoid stress on the equipment. It is strongly recommended that the piping contractor refrain from piping closer than 3'-0" minimum to the equipment. This will allow for proper fit-up upon arrival of the unit at the job-site. Any adjustment that is necessary can be made to the piping at that time.

6. Where specified, supply and install valves in water piping upstream and downstream of evaporator and condenser water boxes to isolate shells for maintenance and to balance and trim system.

7. Supply and install flow switches (or equivalent devices) in both chilled water and condenser water piping. Interlock each switch with proper pump starter to ensure that unit can only operate when water flow is established.

8. Supply and install taps for thermometers and pressure gauges in water piping adjacent to inlet and outlet connections of both evaporator and condenser.

9. Supply and install drain valves to each water box.

10. Supply and install vent cocks on each water box.

11. Where specified, supply and install strainers ahead of all pumps and automatic modulating valves.

12. Supply and install pressure-relief piping from pressure-relief rupture disc to atmosphere.

13. If necessary, supply sufficient HCFC-22 refrigerant (maximum of 1 Lb. per machine) for leak testing and dry nitrogen (8 PSIG per machine) for pressure testing under manufacturer's supervision.

14. Start unit under supervision of a qualified service technician.

15. Where specified, supply and insulate evaporator and any other portions of machine as required to prevent sweating under normal operating conditions.

16. **Unit-Mounted Starters Only** Remove top of starter panel and cut access area for line-side wiring; front left quadrant of top provides recommended access to starter lugs.

17. Supply and install wire terminal lugs to starter.

18. **Unit-Mounted Starters Only** Supply and install field wiring to line-side lugs of starter.

19. Supply and install a Refrigerant Monitor per ASHRAE 15 specifications. For additional information, refer to CenTraVac® Checksheet and Request for Serviceman form 1-27.08. Contact the nearest Trane office for the most recent up to date copy.

Table 1 - Installation Requirements

Type of Requirement	Trane-Supplied Trane-Installed	Trane-Supplied Field-Installed	Field-Supplied Field-Installed
Rigging			A. Safety chains B. Clevis connectors C. Lifting beam
Isolation		A. Isolation pads or spring isolators	A. Isolation pads or spring isolators
Electrical	A. Circuit breakers or fusible disconnects (optional) B. Unit-mounted starter (optional) C. PFCCs (optional)	A. Jumper bars B. Temperature sensor (optional outdoor air) C. Flow switches (may be field supplied)	A. Circuit breakers or fusible disconnects (optional) B. Remote-mounted starter, AFD (optional) C. PFCCs (Remote-mounted starter option only) D. Terminal lugs E. Ground connection(s) F. Jumper bars G. BAS wiring (optional) H. IPC wiring (AFD and remote-mounted starters only I. Control voltage wiring (AFD and remote-mounted starters only) J. Oil pump interlock wiring (AFD and remote-mounted starters only) K. High condenser pressure interlock wiring (AFD and remote-mounted starters only). L. Chilled water pump contactor and wiring M. Condenser water pump contactor and wiring N. Option relays and wiring (See Table 12)
Water Piping		A. Flow switches (May be field supplied)	A. Thermometers B. Water flow pressure gauges C. Isolation and balancing valves water piping D. Vents and drain valves (1 each per class) E. Pressure-relief valves (for water boxes as required)
Rupture Disc	A. Rupture disc assy		A. Vent line and flexible connector
Insulation	a. Insulation (Optional)		A. Insulation

Figure 1
Typical CVHE and CVHG Chiller with Refrigerant and Oil Pump

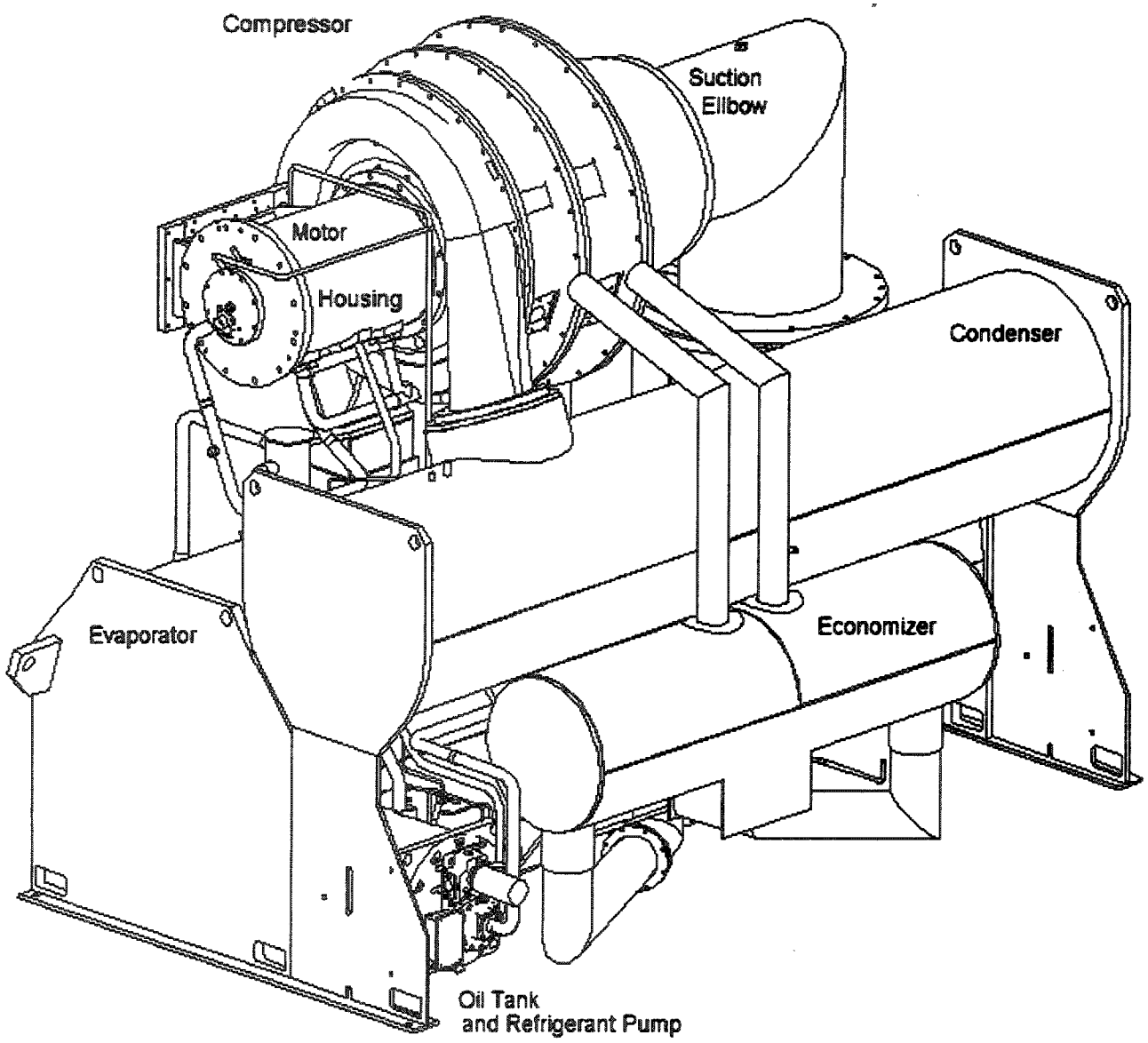

⚠ CAUTION

CHILLER OPERATION AT AMBIENT TEMPERATURES EXCEEDING 100°F (38C) CAN FATIGUE THE UNIT'S RUPTURE DISC, CAUSING IT TO BREAK AT A REDUCED REFRIGERANT PRESSURE (I.E., <15 PSIG.) STARTER COMPONENT DAMAGE CAN ALSO OCCUR WHEN ADVERSE OPERATING CONDITIONS ARE PRESENT.THE ABOVE CAN HAPPEN, BECAUSE OF THE PANEL'S INABILITY TO DISSIPATE HEAT ADEQUATELY. Take whatever action is necessary to improve the equipment room environment if any of these adverse operating conditions are present.

Foundation Requirements

Provide rigid, non-warping mounting pads or a concrete foundation as a mounting surface for the chiller. Ensure that the base is of sufficient strength and mass to properly support the chiller at its full operating weight (i.e., including completed piping, and full operating charges of refrigerant, oil and water.

For your convenience, a summary of standard tube bundle locations are provided in Table 2 and Table 3. Table 4 indicates the weights of various chiller options. Table 5 shows typical weights for Cooling Only units.

Notice that the floor loading for all sizes of CVHE, CVHF and CVHG chillers is 62 pounds per square inch.

To assure proper unit operation, the chiller must be level within 1/16" over its length and width when set into place on the mounting surface.

The Trane Company will not assume responsibility for equipment problems resulting from an improperly designed or constructed foundation.

Figure 2
Clearance Requirements for Cooling and Auxiliary Units

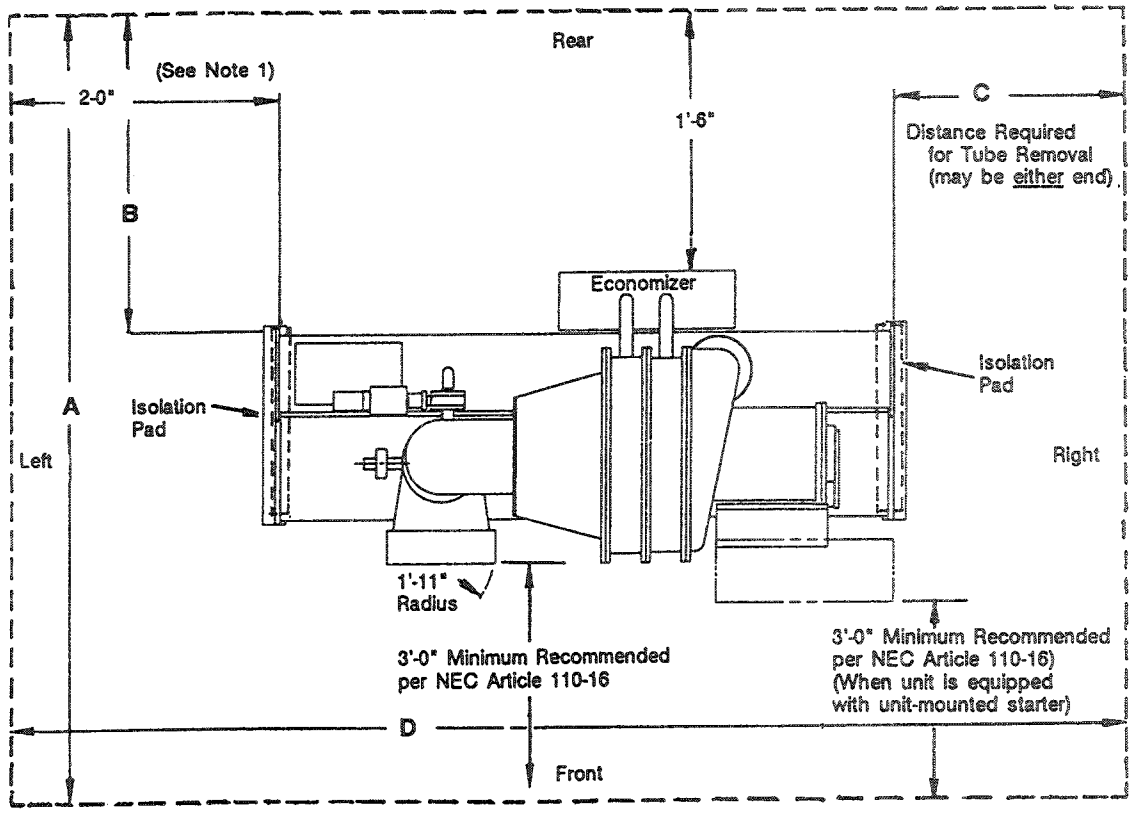

Top View

Notes:
1. Does not include water box. Add water box dimension to this figure.
2. Minimum vertical clearance over chiller is 3 feet.

Do not install piping or conduit above compressor motor assembly or behind suction elbow.

CVHE, CVHF and CVHG Cooling and Auxiliary Units (Clearances)							
DIM	**SHELL COMB**	**EVSZ 032S/L**	**EVSZ 050S/L**	**EVSZ 080S/L**	**EVSZ 142M/L/E**	**EVSZ 210L**	**EVSZ 250E**
A1	ALL	10'-3-1/4"	11'-1-5/8"	12'-5-1/4"	14'-5-3/4"	15'-3-3/4"	16'-5-1/2"
A2	ALL	11'-4-1/2"	12'-5-1/2"	13'-1-5/8"	15'-1"	15'-7"	16'-6-1/2"
B	ALL	2'-6-5/8"	2'-10"	2'-6-3/8"	2'-11-3/8"	3'-0-1/8"	2'-11-1/8"
C	S/S	11'-9"	11'-9"	11'-9"	N/A	N/A	N/A
	S/L, M/L, L/L	15'-6"	15'-6"	15'-6"	15'-6"	15'-6"	N/A
	E/L	N/A	N/A	N/A	17'-5"	N/A	17'-5"
D	S/S	26'-5"	26'-6-3/8"	27'-4-1/4"	N/A	N/A	N/A
	S/L, M/L, L/L	33'-11-1/4"	34'	34'-10-1/2"	35'-5-1/4"	35'-5-1/4"	N/A
	E/L	N/A	N/A	N/A	39'-3"	N/A	39'-6"

A1 = Without Unit Mounted Starter
A2 = With Unit Mounted Starter

Notes:
1. EVSZ = Evaporator Size, L = Long Shell; S = Short Shell; E = Extended Shell, M = Medium Shell
2. Clearance requirement to evaporator tube removal does not includ water box. Add water box dimension to this figure.

Figure 3
Clearance Requirements for Heat Recovery Units

DIM	Shell Comb	EVSZ 032S/L	EVSZ 050S/L	EVSZ 080S/L	EVSZ 142M/L/E	EVSZ 210L	EVSZ 250E
A1	All	10'-6-5/8"	11'-2-3/4"	12'-5-3/8"	14'-10"	15'-8-1/2"	N/A
A2	All	11'-8"	12'-6-5/8"	13'-1-3/4"	15'-5-1/4"	15'-11-3/4"	
B	All	2'-10"	2'-11-1/8"	2'-6-1/2"	3"-3-5/8"	3'-10-1/4"	
C	S/S	11'-9"	11'-9"	11'-9"	N/A	N/A	
	S/L, M/L, L/L	15'-6"	15'-6"	15'-6"	15'-6"	15'-6"	
	E/L	N/A	N/A	N/A	17'-5"	N/A	
D	S/S	26'-5"	26'-6-3/8"	27'-4-1/4"	N/A	N/A	
	S/L, M/L, L/L	33'-11-1/4"	34'	34'-10-1/2"	35'-5-1/4"	35'-5-1/4"	
	E/L	N/A	N/A	N/A	39'-3"	N/A	

A1 = Without Unit Mounted Starter
A2 = With Unit Mounted Starter

Notes:

1. EVSZ = Evaporator Size, L = Long Shell; S = Short Shell; E = Extended Shell
2. Clearance requirement to evaporator tube removal does not include water box. Add water box dimension in this figure.
3. Does not include water box. Add water box dimension to this figure.

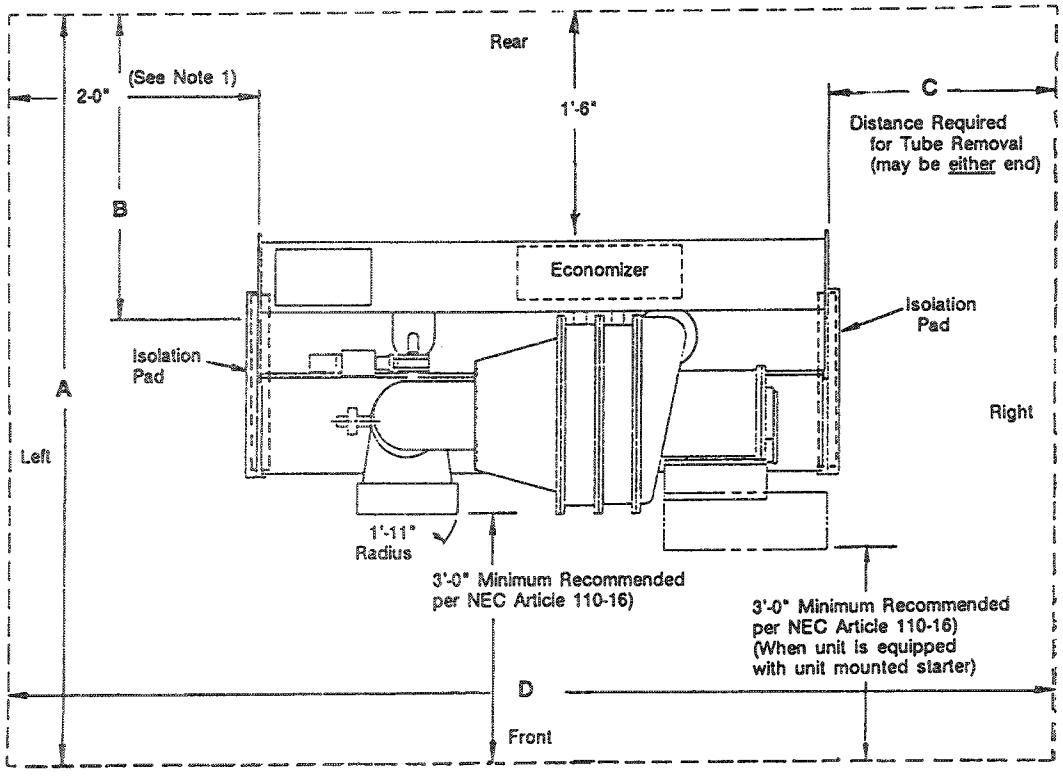

Top View

Notes:
1. Does not include water box.
2. Minimum vertical clearance over chiller is 3 feet.

Do not install piping or conduit above compressor motor assembly or behind suction elbow!

Figure 4
Tube Bundle Locations Showing Cooling Only, Free Cooling, Heat Recovery and Auxiliary Condenser Units

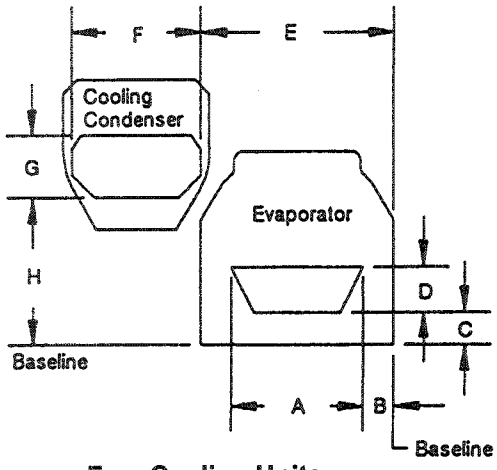

Free Cooling Units

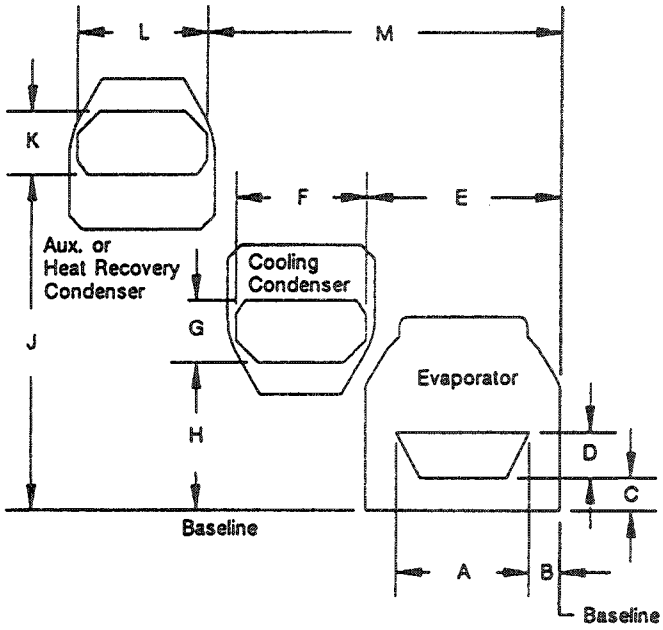

Heat Recovery & Auxiliary Condenser Units

Table 2
Tube Bundle Locations for Cooling Only and Free Cooling Units

Shell Size	Cooling Only and Free Cooling Units							
	A	B	C	D	E	F	G	H
032	2'-0-3/4"	2-5/8"	11-1/8"	7-1/4"	2'-7-3/4"	18"	10"	2'-2-3/8"
050	2'-6-3/4"	2-7/8"	9-3/8"	9-5/8"	3'-1-1/8"	1'-11-1/8"	1'-2-3/8"	2'-3-3/4"
080	3'-5-1/8"	4-1/4"	6-1/4"	11-3/8"	3'-7-3/4"	2'-4-1/8"	1'-7-1/4"	3'-7"
142	3'-10-3/8"	4-1/4"	6-5/8"	1'-2-5/8"	4'-2-3/8"	3'-3-1/8"	2'-0-7/8"	3'-8-3/8"
210	4'-5"	4-1/2"	7-1/8"	1'-5"	4'-11"	3'-7-1/2"	2'-4-1/8"	3'-9-3/4"
250	5'-0-3/4"	5-1/2"	7-1/8"	1'-7-1/4"	5'-8-5/8"	3'-10-3/4"	2'-4-1/8"	4'-0-1/4"

Table 3
Tube Locations for Heat Recovery and Auxiliary Condenser Units

	Shell Size	Heat Recovery				Auxiliary Condenser			
		J	K	L	M	J	K	L	M
	032	4'-6-3/8"	10-1/4"	1'-6-1/2"	4'	4'-6-3/4"	9-1/8"	1'-2"	3'-11-3/4"
CVHE	050	5'-2-3/8"	1'-2-3/8"	1'-10-3/8"	4'-6"	5'-0-7/8"	9-1/8"	1'-2"	4'-8-1/4"
CVHF/G	050	6'-2-1/2"	1'-2-3/8"	1'-10-3/8"	4'-10"	6'-0-7/8"	9-1/8"	1'-2"	5'-0-5/8"
	080	7'-3-1/8"	1'-7-1/4"	2'-4-7/8"	4'-8-3/8"	6'-10-1/2"	9-1/8"	1'-2"	5'-8-7/8"
	142	8'-7-3/8"	2'-0-7/8"	3'-2-1/2"	6'-2"	7'-9-3/8"	9-1/8"	1'-2"	7'-3-5/8"
	210	8'-7-1/2"	2'-4-1/8"	3'-7-1/2"	6'-6-5/8"	8'-7-5/8"	9-1/8"	1'-2"	3'-9-3/4"
	250	Not Available							

Table 4
Typical Shipping and Operating Weights (Lbs.) (See Note 1)

Cond Size CDSZ	Aux Cond Size 80		Aux Cond Size 130		Heat Rec Cond		Free Cooling	
	Ship	Oper	Ship	Oper	Ship	Oper	Ship	Oper
032S	825	1057	960	1248	2119	2624	500	785
032L	825	1057	960	1248	2663	3263	500	785
050S	825	1057	960	1248	3170	4018	750	1290
050L	825	1057	960	1248	3985	4986	750	1290
080S	825	1057	960	1248	5340	6593	750	1360
080L	825	1057	960	1248	6683	8180	750	1360
142L	825	1057	960	1248	12180	14666	1400	2400
210L	825	1057	960	1248	16023	19299	1400	2400

Notes:
1. Unit-Mounted Starter Option = 530 Lbs. (Shipping and Operating)
2. Weights shown are accurate within ± 3% and are calculated with non-marine 150 psig water boxes. Marine-style water boxes may add considerably more weight; contact LBU Marketing for details.
3. Operating weights include refrigerant, oil and water charges.
4. For more specific data on weights and isolator loading, refer to the unit submittal package.

Table 5
Typical Weights for Cooling Only

		Shell Length Designators		Maximum Weights (Lbs.)	
Type	Nton	EVSZ	CDSZ	Shipping	Operating
CVHE	230-320	032S	032S	13191	14379
CVHE	230-320	032S	032L	13735	15018
CVHE	230-320	032L	032L	14381	15892
CVHE	230-320	050S	050S	16049	18000
CVHE	230-320	050S	050L	16864	18968
CVHE	230-320	050L	050L	17796	20259
CVHE	360-500	050S	050S	16699	18650
CVHE	360-500	050S	050L	17514	19618
CVHE	360-500	050L	050L	18446	20909
CVHE	360-500	080S	080S	22682	25797
CVHE	360-500	080S	080L	24025	27384
CVHE	360-500	080L	080L	25605	29497
CVHE	560-800	080S	080S	24432	27547
CVHE	560-800	080S	080L	25775	29134
CVHE	560-800	080L	080L	27355	31247
CVHF	305-485	050S	050S	15694	17645
CVHF	305-485	050S	050L	16509	18613
CVHF	305-485	050L	050L	17441	19904
CVHF	305-485	080S	080S	21652	24767
CVHF	305-485	080S	080L	22995	26354
CVHF	305-485	080L	080L	24575	28467
CVHF	555-640	050S	050S	17314	19265
CVHF	555-640	050S	050L	18129	20233
CVHF	555-640	050L	050L	19061	21524
CVHF	555-640	080S	080S	23272	26387
CVHF	555-640	080S	080L	24615	27974
CVHF	555-640	080L	080L	26195	30087
CVHF	650-910	080S	080S	24242	27357
CVHF	650-910	080S	080L	25585	28944
CVHF	650-910	080L	080L	27165	31057
CVHF	1060-1280	142M	142L	35538	41116
CVHF	1060-1280	142L	142L	36352	42286
CVHF	1060-1280	142M	142L	36138	41716
CVHF	1060-1280	142L	142L	36952	42886
CVHF	1060-1280	142E	142L	37840	44303
CVHF	1060-1280	210L	210L	44666	52513
CVHF	1060-1280	250E	250L	54646	65616
CVHF	1470	210L	210L	49980	57820
CVHF	1470-1720	250E	250L	59960	70930
CVHG	480-565	050S	050S	18449	20400
CVHG	480-565	050S	050L	19264	21368
CVHG	480-565	050L	050L	20196	22659
CVHG	480-565	080S	080S	24432	27547
CVHG	480-565	080S	080L	25775	29134
CVHG	480-565	080L	080L	27355	31247
CVHG	670-780	080S	080S	25032	28147
CVHG	670-780	080S	080L	26375	29734
CVHG	670-780	080L	080L	27955	31847
CVHG	670-780	142M	142L	36627	42205
CVHG	920-1067	142L	142L	37441	43375
CVHG	920-1067	142M	142L	37427	43005
CVHG	920-1067	142L	142L	38241	44175
CVHG	920-1067	210L	210L	45955	53802

Note: Immediately report any unit damage incurred during handling or installation at the job site to Trane sales office.

Rigging

Lifting is the recommended method for moving chillers. Suggested lifting arrangements for standard and heat-recovery units are illustrated in Figure 5.

Note that each of the cables used to lift the unit must be capable of supporting the entire weight of the chiller.

⚠ WARNING
LIFT THE CHILLER HORIZONTALLY. Failure to do so could result in death or serious bodily injury and equipment damage.

See shipping tables 2, 3 and 5 for shipping weights.

Refer to lifting arrangement and rigging in Figure 5. Notice that the lifting beam used to lift the unit must be at least 12 feet long.

To lift the chiller properly, insert clevis connections at the points indicated in Figure 5, a 2"- diameter lifting hole is provided at each of these points. Next attach the lifting chains or cables.

Once the lifting cables are in place, attach a safety chain or cable between the first-stage casting of the compressor and the lifting beam. To do this, remove a retaining bolt from the compress first-stage casting and replace it with an eyebolt.

Note: There should not be tension on this safety cable; it is used only to prevent the unit from rolling during the lift.

When the lift is complete, detach the clevis connections and safety chain, then remove the eyebolt that was used to secure the safety chain to the compressor, and reinstall the retaining bolt in its place.

If the chiller cannot be moved using the conventional rigging method just described, consider these points.

1. If job site conditions require rigging of the chiller at an angle greater than 45° from horizontal (end-to-end), dowel-pin the compressor and remove it from the unit. Be sure to contact a qualified service organization for specific rigging instructions.

⚠ CAUTION
IF THE UNIT WILL BE LIFTED AT ANY ANGLE GREATER THAN 15° FROM END-TO-END, REMOVE THE OIL FROM THE OIL TANK. Failure to do so, will cause oil to drain out of oil tank into other areas of chiller. It will be extremely difficult to return the oil to the oil tank even during operation.

2. When lifting the chiller is either impractical or undesirable, attach cables or chains to the jacking slots shown in Figure 5; then push or pull the unit across a smooth surface.

⚠ CAUTION
CHILLER SHIPPING SKIDS ARE NOT DESIGNED TO SUPPORT THE ENTIRE WEIGHT OF THE UNIT AT ANY POINT. Improperly supporting the chiller and skid assembly may result in equipment damage.

Note: The oil tank with the refrigerant pump is mounted under the condenser and may be damaged by a fork truck.

⚠ CAUTION
DO NOT USE A FORK LIFT TO REMOVE THE CHILLER. Using a fork lift can result in damaged equipment.

⚠ CAUTION
CONSULT THE TRANE COMPANY BEFORE LIFTING THE COMPRESSOR/MOTOR ASSEMBLY FROM THE SHELLS WITHOUT FACTORY-INSTALLED DOWELING IN THE COMPRESSOR CASTING FLANGES. Failure to do so can result in misalignment of the compressor castings.

3. If removal of the compressor or economizer assembly is necessary to move the chiller into its operating location, contact the Trane Company for special instructions concerning chiller disassembly and reassembly procedures. Refer to CVHE-IN-3B or latest revision.

Figure 5
Recommended Lifting Arrangements for CVHE, CVHF and CVHG Units

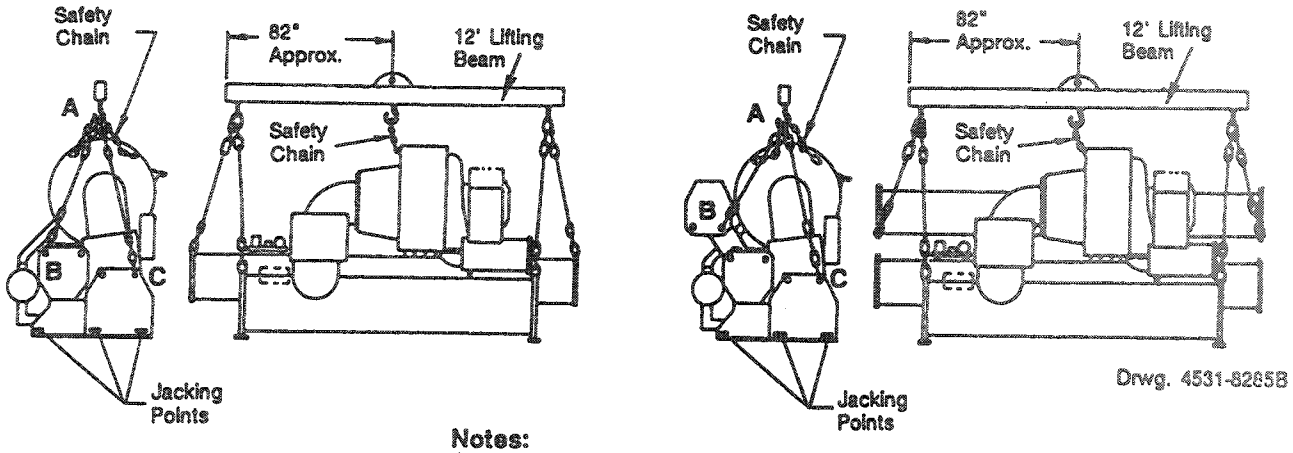

Notes:
1. Lifting chains (or cables) may or may not be the same length between Points A and B, or between Points A and C. Adjust as necessary for an even lift.
2. Lifting holes provided on chiller to attach chains are 2" in diameter.
3. Attach safety chain (or cable) as shown, and without tension. The safety chain is not used for lifting, but is there to prevent the unit from rolling.
4. Do not forklift the unit!

⚠ WARNING
DO NOT USE CHAINS OR CABLES OTHER THAN AS SHOWN. Failure to heed this warning by using alternative lifting arrangements may result in death or serious injury and equipment damage.

Shipping Skid Removal

To detach the skid from the unit once the chiller is set into place:

1. Remove the carriage bolts that fasten the steel straps to the skids. Carriage bolt locations are shown in Figure 6.

2. Place jacks in the slots provided at each end of the chiller.

3. Using the jacks installed in Step 2, elevate one end of the chiller at a time; work from end to end in small increments to ensure stability. The skid will remain on the floor.

4. Once the chiller is elevated sufficiently, disassemble and remove the skid.

⚠ WARNING

SHIPPING SKIDS ARE HEAVY AND SHOULD NOT BE DROPPED. Failure to handle with care may cause death or bodily injury.

5. Position isolator pads (Spring isolators) beneath the chiller feet. (See "Unit Isolation" section for instructions.

6. Once the isolators are in place, lower the chiller. Again, work from end to end in small increments to maintain stability.

Figure 6
Typical Chiller Shipping Skid

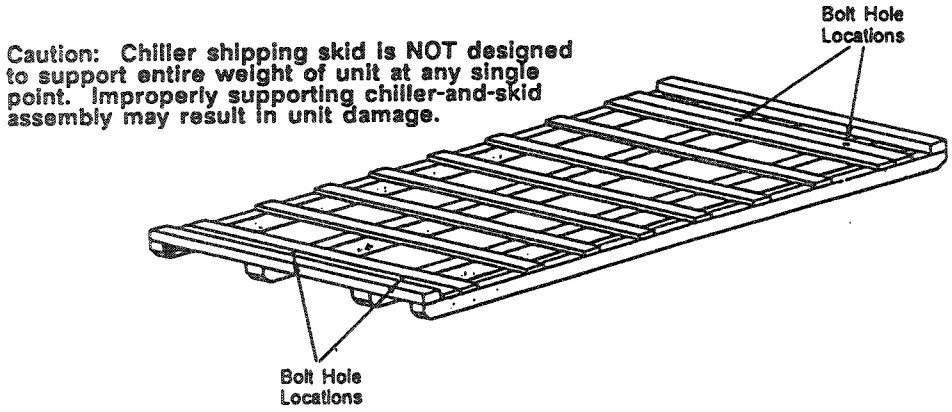

Chiller Isolation

To minimize sound and vibration transmission through the building structure and to assure proper weight distribution over the mounting surface, install isolation pads or spring isolators under the chiller feet.

Note: Isolation pads are provided with each chiller unless spring isolators are specified on the sales order.

Specific isolator loading data is provided in the unit submittal package. Also refer to Table 6. If necessary, contact your local Trane sales office for further information.

Isolation Pads

When the unit is ready for final placement, position isolation pads end for end under the full length of the chiller leg. The pads measure 6" x 18" and on some units there may be small gaps between pads. Remember that the chiller must be level within 1/16" over its length and width after it is lowered onto the isolation pads. In addition, all piping connected to the chiller must be properly isolated and supported so that it does not place any stress on the unit.

Spring Isolators

Spring isolators should be considered whenever chiller installation is planned for an upper story location. Base isolator selection and placement on the information presented in Figures 9 and 10. (Notice that 3 types of spring isolators - each with its own maximum loading characteristics are used with the CVHE, CVHF and CVHG chillers.)

Spring isolators typically ship assembled and ready for installation. To install and adjust the isolators properly, follow the instructions given.

Note: Do not adjust the isolators until the chiller is piped and charged with refrigerant and water.

1. Position the spring isolators under the chiller as shown in Figures 8, and 9. Make sure that each isolator is centered in relation to the tube sheet.

2. Set the isolators on the sub-base; shim or grout as necessary to provide a flat, level surface at the same elevation for all mountings. Be sure to support the full underside of the isolator base plate; do not straddle gaps or small shims..

Figure 7
Isolation Pad

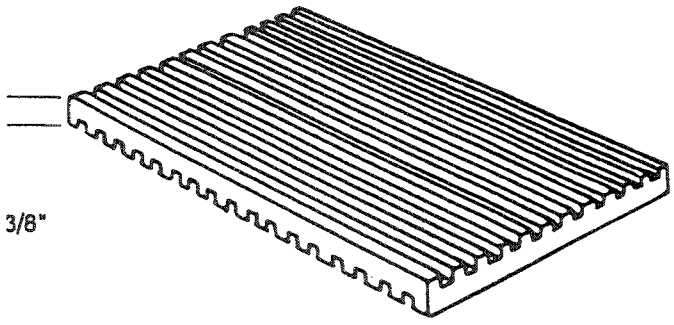

Table 6
Isolation Pad Loading

		Shell Length Designators		Isolator Loading	
TYPE	NTON	EVSZ	CDSZ	LEFT PAD	RIGHT PAD
CVHE	230-320	032S	032S	5758	8621
CVHE	230-320	032S	032L	6323	8695
CVHE	230-320	032L	032L	6394	9519
CVHE	230-320	050S	050S	7573	10427
CVHE	230-320	050S	050L	8428	10540
CVHE	230-320	050L	050L	8541	11718
CVHE	360-500	050S	050S	7883	10767
CVHE	360-500	050S	050L	8737	10881
CVHE	360-500	050L	050L	8818	12091
CVHE	360-500	080S	080S	11391	14406
CVHE	360-500	080S	080L	12791	14594
CVHE	360-500	080L	080L	12966	16531
CVHE	560-800	080S	080S	11910	15637
CVHE	560-800	080S	080L	13308	15826
CVHE	560-800	080L	080L	13477	17855
CVHF	305-485	050S	050S	7298	10347
CVHF	305-485	050S	050L	8154	10459
CVHF	305-485	050L	050L	8311	11593
CVHF	305-485	080S	080S	10777	13990
CVHF	305-485	080S	080L	12178	14177
CVHF	305-485	080L	080L	12436	16031
CVHF	555-640	050S	050S	7701	11564
CVHF	555-640	050S	050L	8556	11677
CVHF	555-640	050L	050L	8726	12798
CVHF	555-640	080S	080S	11214	15173
CVHF	555-640	080S	080L	12614	15360
CVHF	555-640	080L	080L	12876	17211
CVHF	650-910	080S	080S	11835	15522
CVHF	650-910	080S	080L	13233	15711
CVHF	650-910	080L	080L	13427	17630
CVHF	650-910	142M	142L	19976	21675
CVHF	650-910	142L	142L	18791	23495
CVHF	1060-1280	142M	142L	20076	22170
CVHF	1060-1280	142L	142L	18919	23967
CVHF	1060-1280	142E	142L	21235	23068
CVHF	1060-1280	210L	210L	23030	29483
CVHF	1060-1280	250E	250L	30991	34626
CVHF	1470	210L	210L	26420	31400
CVHF	1470-1720	250E	250L	33520	37410
CVHG	480565	050S	050S	8551	11849
CVHG	480565	050S	050L	9403	11965
CVHG	480565	050L	050L	9439	13220
CVHG	480565	080S	080S	11910	15637
CVHG	480565	080S	080L	13308	15826
CVHG	480565	080L	080L	13477	17771
CVHG	670780	080S	080S	12129	16018
CVHG	670780	080S	080L	13527	16207
CVHG	670780	080L	080L	13683	18164
CVHG	670780	142M	142L	20575	22160
CVHG	920, 1067	142L	142L	19389	23986
CVHG	920, 1067	142M	142L	21053	23082
CVHG	920, 1067	142L	142L	19767	24409
CVHG	920, 1067	210L	210L	23816	29986

3. If required, bolt the isolators to the floor through the slots provided, or cement the pads.

Note: Fastening the isolators to the floor is not necessary unless specified.

4. If the chiller must be fastened to the isolators, insert cap screws through the chiller base and into the holes tapped in the upper housing of each isolator. However, do not allow the screws to protrude below the underside of the isolator upper housing. An alternative method of fastening the chiller to the isolators is to cement the neoprene pads.

5. Set the chiller on the isolators; refer to "Rigging" for listing instructions.

The weight of the chiller will force the upper housing of each isolator down, perhaps causing it to rest on the isolators's lower housing. Figure 10 illustrates spring isolator construction.

6. Check the clearance on each isolator. If this dimension is less than 1/4-inch on any isolator, use a wrench to turn the adjusting bolt one complete revolution upward.

Repeat this operation until a 1/4-inch clearance is obtained at one or more isolators.

Note: When the load is applied to the isolators (Step 5), the top plate of each isolator moves down to compress the springs until either; (1) The springs support the load; or (2) The top plate rests on the bottom housing of the isolator.

a. If the springs are supporting the load, screwing down on the adjusting bolt (Step 7) will immediately begin to raise the chiller.

7. Turn the adjusting bolt on each of the remaining isolators to obtain the required minimum clearance of 1/4-inch.

8. Once the minimum required clearance is obtained on each of the isolators, level the chiller by turning the adjusting bolt on each of the isolators on the low side of the unit. Be sure to work from one isolator to the next. Remember that the chiller must be level to within 1/16: over its length and width, and that clearance of each isolator must be 1/4-inch.

Figure 9
Chiller Foot and Isolator Orientation

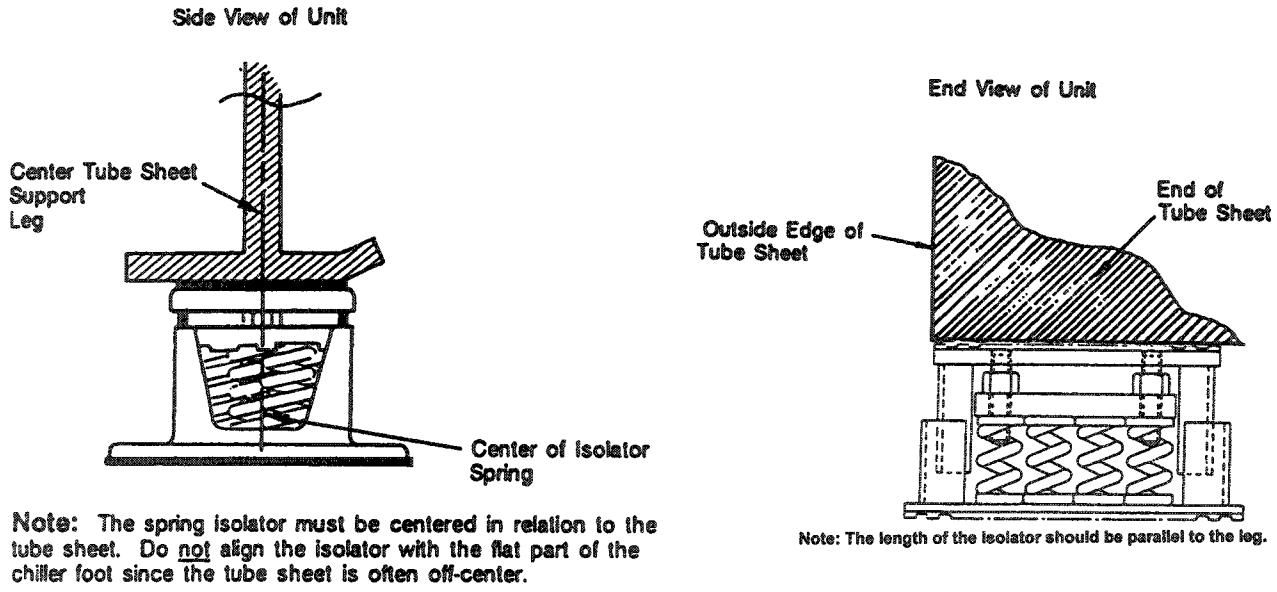

Note: The spring isolator must be centered in relation to the tube sheet. Do not align the isolator with the flat part of the chiller foot since the tube sheet is often off-center.

Note: The length of the isolator should be parallel to the leg.

Figure 10
Typical Spring Isolator Types and Construction (Continued next page)

Type CT-4
Spring Isolators

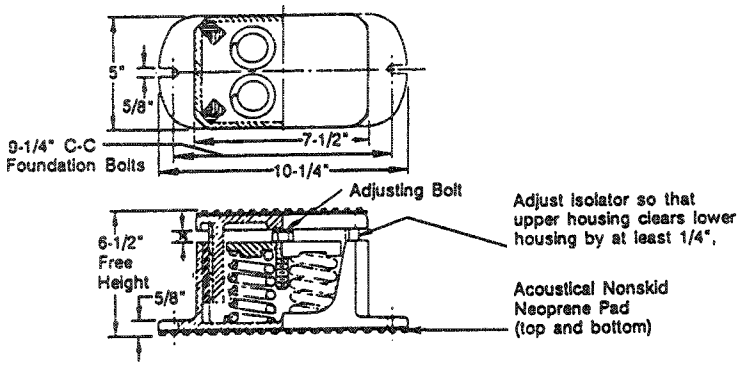

Isolator Type and Size	Maximum Load (Lbs)	Deflection (Inches)	Spring Color Coding
CT-4-25	1,800	1.22	Red
CT-4-26	2,400	1.17	Purple
CT-4-27	3,000	1.06	Orange
CT-4-28	3,600	1.02	Green
CT-4-31	4,400	0.83	Gray
CT-4-32	5,200	0.74	White

Type CT-7
Spring Isolators

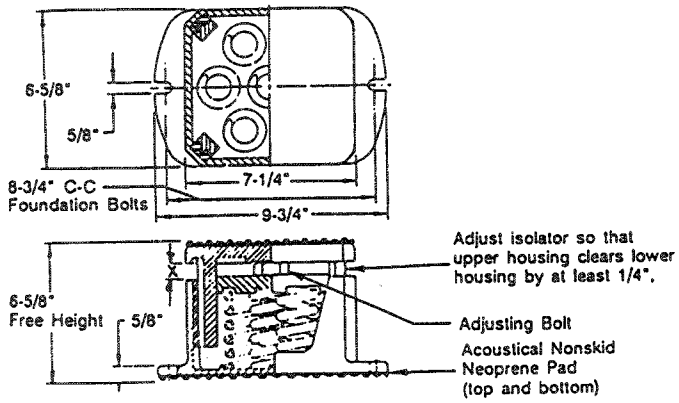

Isolator Type and Size	Maximum Load (Lbs)	Deflection (Inches)	Spring Color Coding
CT-7-25	3,150	1.22	Red
CT-7-26	4,200	1.17	Purple
CT-7-27	5,250	1.06	Orange
CT-7-28	6,300	1.02	Green
CT-7-31	7,700	0.83	Gray
CT-7-32	9,100	0.74	White
Note: Each type CT-7 Spring Isolator has 7 Springs			

Figure 10 - Typical Spring Isolator and Construction (Continued)

Isolator Type and Size	Maximum Load (Lbs)	Deflection(Inches)	Spring Color Coding
CT-12-25	5,400	1.22	Red
CT-12-26	7,200	1.17	Purple
CT-12-27	9,000	1.06	Orange
CT-12-28	10,800	1.02	Green
CT-12-31	13,200	0.83	Gray
CT-12-32	15,600	0.74	White

Type CT-12 Spring Isolators

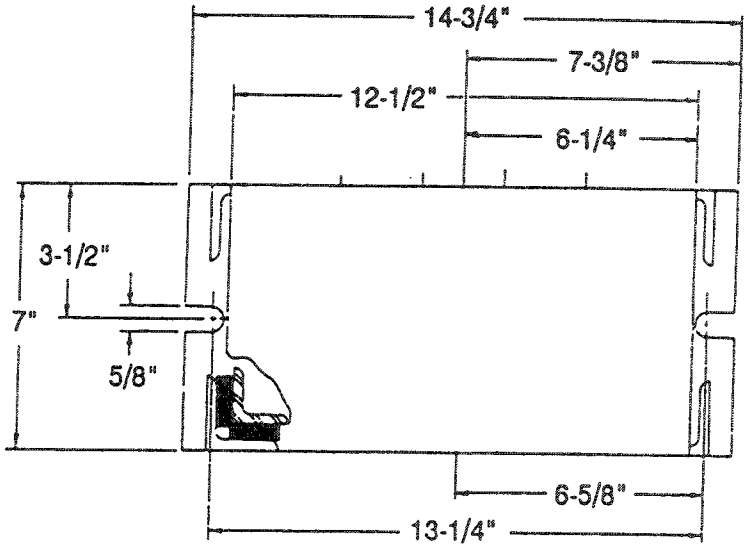

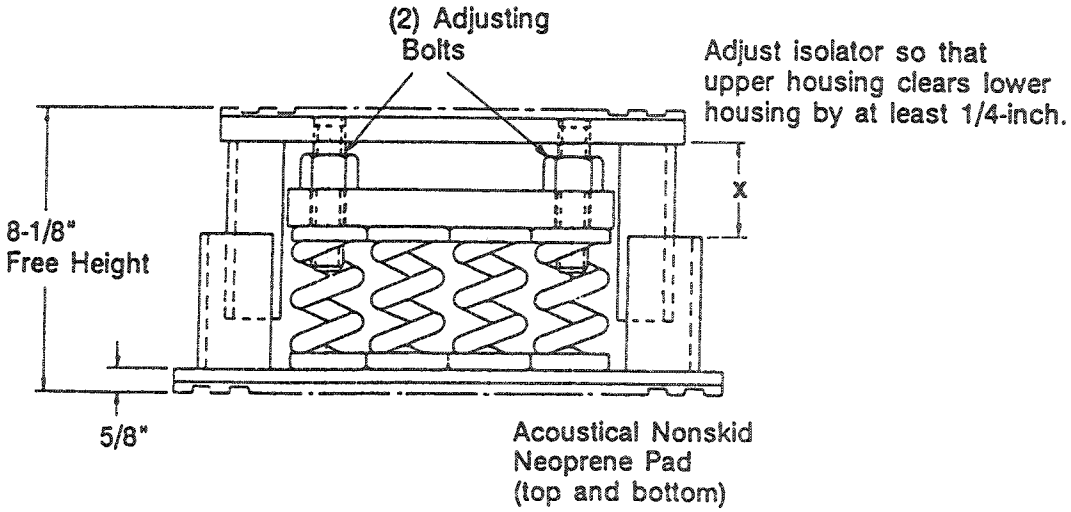

Unit Leveling

Follow the instructions outlined below and illustrated in Figure 11 to determine whether or not the chiller is set level.

1. Measure an equal distance up from each foot of the chiller and make a punch mark at each measured distance.

2. Suspend a clear plastic tube along the length of the chiller as shown in Figure 11.

3. Fill the tube with water until the level aligns with the punch mark at one end of the chiller; then check the water level at the opposite mark.

If the water level does not align with the punch mark, use full-length shims to raise one end of the chiller until the water level at each end of the tube aligns with the punch marks at both ends of the chiller.

4. Once the unit is level across its length, repeat Steps 1 through 3 to see if unit is level across the the width.

Figure 11
Checking Unit Levelness

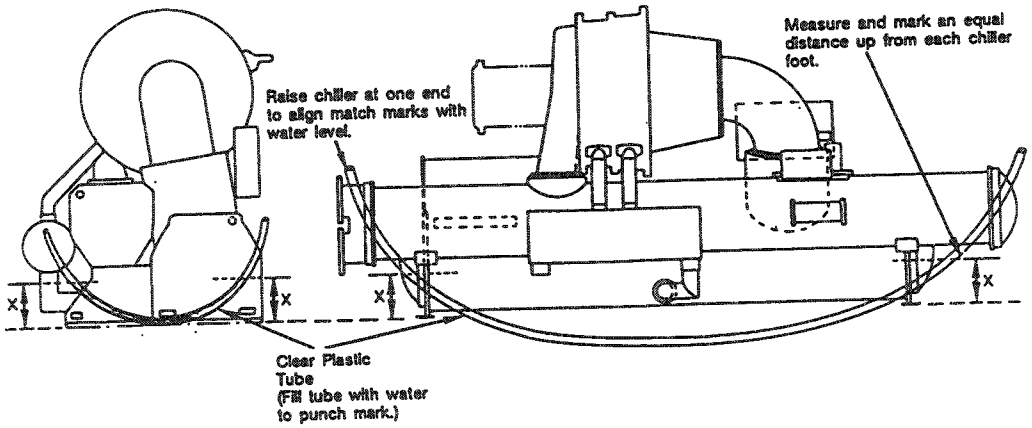

Installation - Water Piping

CVHE-IN-10C

Library	**Service Literature**
Product Section	**Refrigeration**
Product	**Centrifugal Liquid Chillers, Water-Cooled**
Model	**CVHE, CVHF, CVHG Cooling Only & Heat Recovery**
Literature Type	**Water Piping - Installation**
Sequence	**10C**
Date	**February 1, 2001**
File No.	**SV-RF-CTV-CVHE-IN-10C-2001**
Supersedes	**SV-RF-CTV-CVHE-IN-10B-2000**

Three manuals ship together as Installation information:

CVHE-IN-9C - General Information
CVHE-IN-10C - Water Piping
CVHE-IN-11C - Electrical

CVHE, CVHF, CVHG Water Cooled CenTraVac®

Design Sequence	
CVHE "3G"	CVHE 60 HZ 230, 250, 280, 320, 360, 400, 450, 500
CVHF "1T"	CVHE 50 HZ 190, 210, 240, 270, 300, 330, 370, 420
CVHG "1J"	CVHF 60 HZ 350, 410, 485, 555, 640, 650, 770, 910, 1060, 1280, 1470, 1720
	CVHG 50 HZ 350, 410, 480, 565, 670, 780, 1067

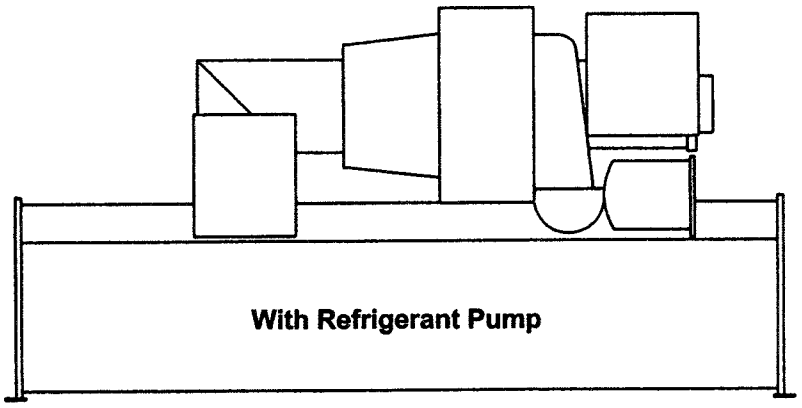

With Refrigerant Pump

X39640504-04

Since the Trane Company has a policy of continuous product and product data improvement, it reserves the right to change design and specifications without notice. Only qualified technicians should perform the installation and servicing of equipment referred to in this publication.

Warnings and Cautions

NOTICE

Warnings and Cautions appear at appropriate locations throughout this manual. Read these carefully.

WARNING: Indicates a potentially hazardous situation which, if not avoided, could result in death or serious injury.

CAUTION: Indicates a potentially hazardous situation which, if not avoided, may result in minor or moderate injury. It may also be used to alert against unsafe practices and where property-damage-only accidents could occur.

©American Standard Inc 2001

Table of Contents

Water Piping		Page Number
Warnings and Cautions		2
Overview		4
Water Treatment		4
Pressure Gauges		4
Valves		4
Strainers		4
Flow-Sensing Devices		4
Evaporator and Condenser Water Piping		6
Water Box Locations		6
Water Piping Connections		6
Grooved Pipe Coupling		10
Flange-Connection Adapters		11
Victaulic Gasket Installation		11
Bolt-Tightening Sequence for Water Piping Connections		13
Flanges with 4, 8 or 12 Bolts		13
Flanges with 16, 20, or 24 Bolts		13
Flanges with more than 24 Bolts		13
Evaporator Water Box Covers		13
Purifier Purge Requirements		15
Purge Installation		15
Refrigerant Vent-Line		15
General Recommendations		15
Purge Discharge Vent Line		15
Rupture Disc Vent Installation		15
Unit Insulation Requirements		20
High Humidity Option		20
Figures		**Page Number**
Flow Switch Installation	Figure 1	5
Typical Evaporator Water Piping Circuit	Figure 2	7
Typical Condenser Water Piping Circuits	Figure 3	8
Typical CVHE Grooved Pipe Connection	Figure 4	9
Customer Piping Alternatives for Water Connections	Figure 5	10
Typical Shipping Location for Flange	Figure 6	11
Typical Victaulic Flange Gasket Configuration	Figure 7	12
Modifying 300 PSIG Flange Adapters for Flat-Faced Flange Application	Figure 8	12
Bolt Tightening Sequences for Water Piping Flange and Water Boxes	Figure 9	14
Rupture Disc Location, Cross Section of Rupture Disc and Recommended Rupture Disc Relief Piping	Figure 10	16
Arrangement for Rupture Disc Relief Piping	Figure 11	17
Rupture Disc Vent Pipe Sizing	Figure 12	19
Recommended Areas for Unit Insulation	Figure 13	21
Tables		**Page Number**
Evaporator Water Piping Conn Sizes	Table 1	9
Condenser Water Piping Conn Sizes	Table 2	9
Water Piping Connection Components	Table 3	10
Installation Data for 150 PSIG Flange Adapters	Table 4	12
Installation Data for 350 PSIG Flange Adapters	Table 5	12
Flange Bolt Torque Recommendations for O-Ring and Flat-Gasket Piping Connections	Table 6	13
"C" Values Used to Determine Rupture Disc Vent Line Sizes	Table 7	18

Water Piping

Overview

Several water piping circuits must be installed and connected to the chiller.

Note: Field Piping must be arranged and supported to avoid stress on the equipment. It is strongly recommended that the piping contractor refrain from piping closer than 3'-0" minimum to the equipment. This will allow for proper fit-up upon arrival of the unit at the job site. Any adjustment that is necessary can be made to the piping at that time.

(a) Pipe the evaporator into the chilled water circuit;

(b) Pipe the condenser into the condenser water circuit;

(c) A heat-recovery condenser water circuit, (optional);

(d) An auxiliary condenser water circuit, (optional)

Piping suggestions for each of the four water circuits listed above are outlined later in this section. General recommendations for the installation of field-supplied piping components (e.g., valves, flow switches, etc.) common to most chiller water circuits are listed below.

Water Treatment

Since the use of untreated or improperly treated water in a CenTraVac® may result in inefficient operation and possible tube damage, be sure to engage the services of a qualified water treatment specialist if needed. A label with the following disclamatory note is affixed to each unit.

Customer Note: The use of improperly treated or untreated water in this equipment may result in scaling, erosion, corrosion, algae or slime. The services of a qualified water treatment specialist should be engaged to determine what treatment, if any, is advisable. The Trane Company warranty specifically excludes liability for corrosion, erosion or deterioration of Trane equipment. Trane assumes no responsibilities for the results of the use of untreated or improperly treat water, or saline or brackish water.

⚠ CAUTION
DO NOT USE UNTREATED OR IMPROPERLY TREATED WATER or equipment damage may occur.

Pressure Gauges

Locate pressure gauge taps in a straight run of pipe. Place tap a minimum of one pipe diameter downstream of any elbow, orifice etc. Example, for a 6" pipe, the tap would be at least 6" from any elbow, orifice, etc.

Valves

1. Install field-supplied air vents and drain valves on the water boxes. Each water box is provided with a 3/4" NPTF vent and drain connection.

Plastic plugs are factory-installed in both openings for shipment; remove and discard these plugs as you install the water box vents and drain valves.

2. If necessary for the application, install pressure-relief valves at the drain connections on the evaporator and condenser water boxes. To do so, add a tee with the relief valve attached to the drain valve.

To determine whether or not pressure-relief valves are needed for a specific application, keep in mind that:

(a) Vessels with close-coupled shutoff valves may cause high potentially damaging hydrostatic pressures as fluid temperature rises; and,

(b) Relief valves are required by ASME codes when the shell waterside is ASME. Follow ASME guidelines or other applicable codes to assure proper relief valve installation.

⚠ CAUTION
INSTALL PRESSURE-RELIEF VALVES IN THE CONDENSER AND EVAPORATOR WATER CIRCUITS, failure to do may result in shell damage due to hydrostatic expansion.

Strainers

Install a strainer in the entering side of each piping circuit to avoid possible tube plugging in the chiller with debris.

⚠ CAUTION
INSTALL STRAINERS IN ALL WATER PIPING ENTERING THE CHILLER, failure to do so may result in tube plugging conditions that could damage unit components.

Flow-Sensing Devices

Use either flow switches or differential pressure switches in conjunction with the pump interlocks to verify evaporator and condenser water flows.

Water Piping

To assure adequate chiller protection, wire the chilled-water and condenser-water flow switches in series with the appropriate water pump interlock. Refer to the wiring diagrams that shipped with the unit for specific electrical connections.

Unless stated otherwise, all flow-sensing devices must be field-supplied. Be sure to follow the manufacturer's recommendations for device selection and installation. Also, review the general flow switch installation guidelines listed below.

1. Mount the flow switch upright in a horizontal section of pipe. Allow at least 5 pipe diameters of straight, horizontal run on each side of the switch.

2. To assure that the flow switch operates as designed, adjust the length of the flow switch paddle to compensate for the pipe diameter and the height of the coupling tee used to install the switch.

3. Install the flow switch using a coupling that is large enough to allow the insertion of a bushing one pipe diameter larger than the flow switch base (Figure 1). This will prevent interference with the flow switch paddle.

4. Verify that the direction-of-flow arrow on the switch points in the same direction as actual water flow through the piping circuit.

5. Remove all air from the piping circuit to prevent possible flow switch "fluttering".

6. Adjust the flow switch to open when water flow is less than normal.

⚠ CAUTION

EVAPORATOR AND CONDENSER "PROOF OF FLOW" SWITCHES (EITHER FLOW OR DELTA-P) ARE REQUIRED IN SERIES WITH THE PUMP CONTACTOR AUXILIARY SHOWN ON WIRING DIAGRAMS. THESE SWITCHES ARE USED WITH UCP2 CONTROL LOGIC TO CONFIRM FLOW PRIOR TO STARTING A UNIT AND TO STOP A RUNNING UNIT IF FLOW IS LOST. FOR TROUBLE SHOOTING, A VIEWABLE DIAGNOSTIC IS GENERATED IF A "PROOF OF FLOW" SWITCH DOES NOT CLOSE WHEN FLOW IS REQUIRED. Failure to include the condenser "proof of flow" switch or to "jumper out" this switch could cause the unit to stop on a secondary level of protection such as high condenser pressure. Frequent cycling on these higher level diagnostic devices could cause excessive thermal and pressure cycling of unit components (O-rings, gaskets, sensors, motors, controls, etc.) resulting in premature failure.

Figure 1
Flow Switch Installation

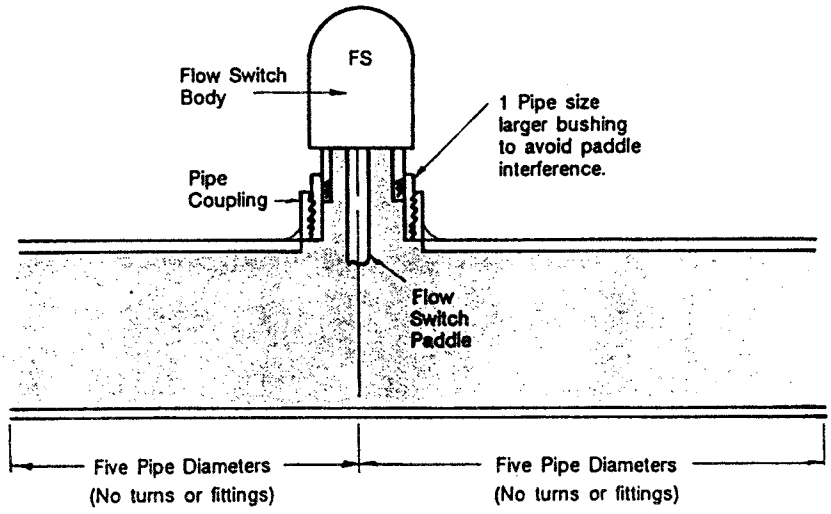

Water Piping

Evaporator and Condenser Water Piping

Figures 2 and 3 illustrate the typical water piping arrangements recommended for the evaporator and condenser.

Note: It is strongly recommended that the piping contractor refrain from piping closer than 3'-0" mini mum to the equipment. This will allow for proper fit-up upon arrival of the unit at the job site. Any adjustment that is necessary can be made to the piping at that time.

Water piping connection sizes are identified in Tables 1, 2 and 3. Remember that entering and leaving evaporator water can be piped to either water box connection since the tube bundles are split vertically.

Note: To assure that the evaporator water piping is clear, check it after the chilled water pump is operated but before initial chiller start-up. If any partial blockages exist, they can be detected and removed to prevent possible tube damage resulting from evaporator freeze-up or erosion.

Note: Arrange the condenser water piping so that the water supply enters the shell at the lower connection, and exits from the top connection. Single-pass condenser shells may be piped as desired since both connections are at the same level.

For applications that include an "infinite source" or "multiple-use", cooling condenser water supply, install a valved bypass "leg" (optional) between the supply and return pipes; see Figure 3. This valved bypass allows the operator to short-circuit water flow through the cooling condenser when the supply water temperature is too low.

⚠ CAUTION
SYSTEM PRESSURE DIFFERENTIAL MUST BE MAINTAINED ABOVE 5 PSID AT ALL TIMES. Failure to do so could result in operating problems.

Note: Whenever a CVHE, CVHF, CVHG chiller is equipped with an auxiliary condenser, use a bypass valve system to avoid circulating water through the auxiliary shell during unit shutdown.

Water Box Locations

If necessary, the non-marine water boxes on each shell whether evaporator or condenser can be switched end-for-end to obtain the desired piping arrangement. Contact Trane LBU Marketing for switching of marine-style boxes.

⚠ CAUTION
DO NOT EXCHANGE POSITIONS OF MARINE WATER BOXES. This could alter designed water flow piping configuration and prevent proper unit operation.

To accommodate lifting apparatus, a nut is welded to each evaporator water box to enable attachment of a 3/4" eyebolt (field-supplied). Condenser water boxes are provided with 1/2" tapped holes that allow installation of the eyebolt included in the unit's loose parts-box.

If the water boxes on any of the shells are exchanged end-for-end, be sure to reinstall them right side up to maintain the correct baffle arrangements. Use a new gasket with each water box cover.

Water Piping Connections

For CVHEs beginning with design sequence "1D', all units (except those with 032 through 050 condenser shells with 150 psig non-marine water boxes) use cut-groove end NSP Victaulic®-style pipe connections. All CVHGs beginning with "1A" and later design sequences. All CVHF units, "A" and later design sequences, use grooved-pipe connections. See Figure 4.

Piping joined using grooved type couplings, like all types of piping systems, requires proper support to carry the weight of pipes and equipment. The support methods used must eliminate undue stresses on joints, piping and other components; allow movement where required, and provide for any other special requirements (i.e., drainage, etc.)

Figure 2
Typical Evaporator Water Piping Circuit

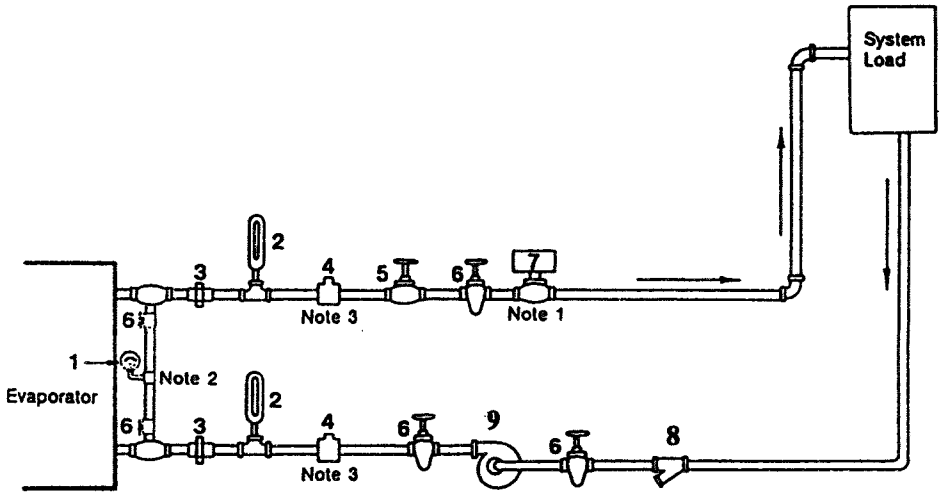

Notes:
1. Flow switch 5S1 (Item 7 in Legend of Components) may be installed in either the entering or leaving leg of the chilled water circuit.

Legend of Field-Supplied/Installed Components

1. Pressure Gauge
2. Thermometer (s) (If field supplied)
3. Union (s) or Flanged Connection(s)
4. 1/2" NPT Coupling(s)
5. Balancing Valve
6. Gate (Isolation) Valve(s) or Ball Valve(s)
7. Chilled Water Flow Switch (5S1)
8. Strainer
9. Evaporator Water Pump

Figure 3
Typical Condenser Water Piping Circuits

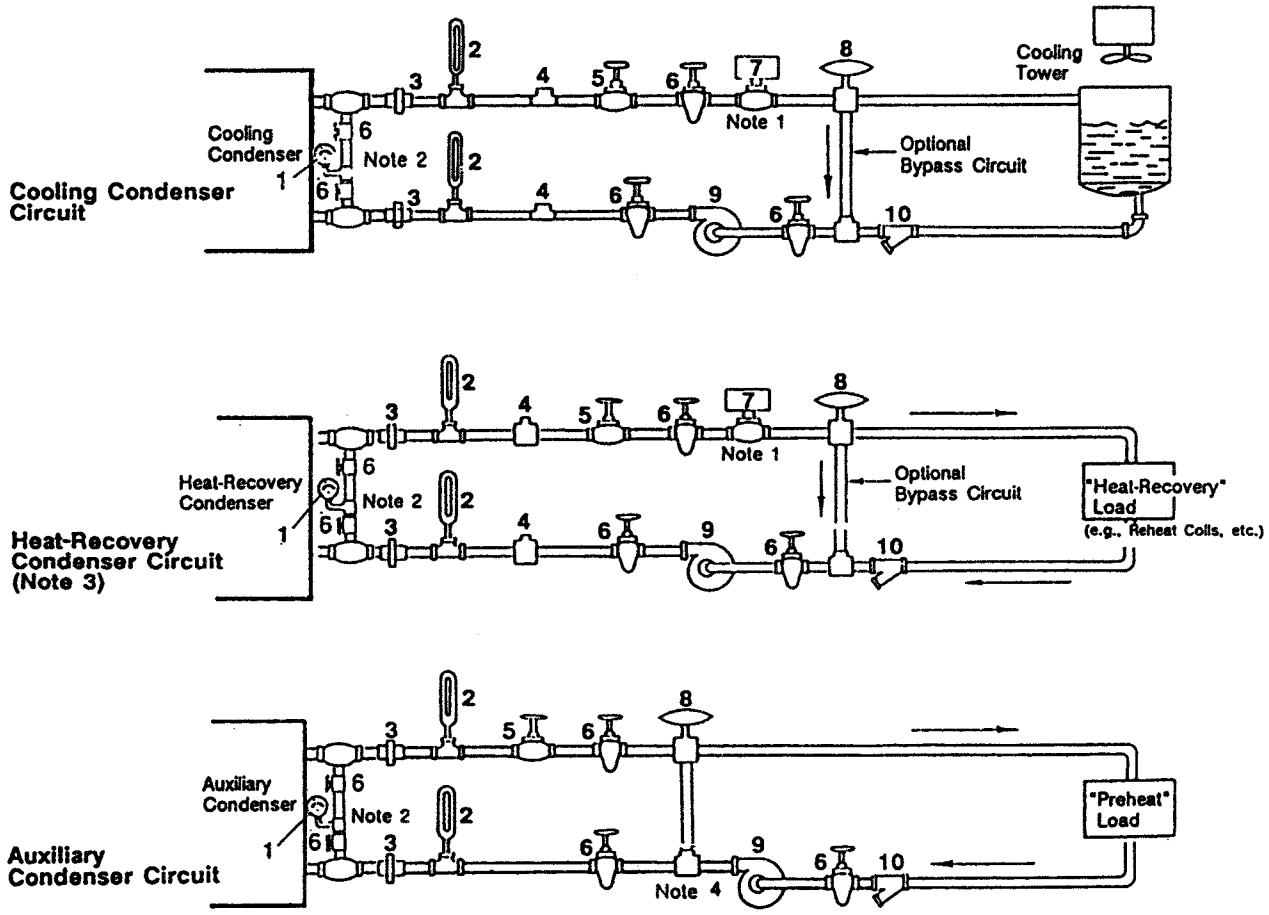

Notes:

1. The Flow Switch 5S2 (Item 7 in Legend of Components) may be installed in either the entering or leaving leg of the chilled water circuit.
2. It is recommended to pipe 1 gauge between entering and leaving pipes.
3. Some type of field-supplied temperature control device may be required to regulate the temperature of the heat-recovery condenser water circuit. For application recommendations, see Trane Application Manual, "AM-FND-8", titled "Heat-Recovery Engineering Seminar".
4. Install a bypass valve system to avoid circulating water through the auxiliary shell when the unit is shut down.

Legend of Field-Supplied/Installed Components

1. Pressure Gauge
2. Thermometer (s) (If field supplied)
3. Union (s) or Flanged Connection(s)
4. 1/2" NPT Coupling(s)
5. Balancing Valve
6. Gate (Isolation) Valve(s) or Ball Valve(s)
7. Condenser Water Flow Switch
8. 3-Way Valve (Optional)
9. Condenser Water Pump
10. Strainer

Table 1
Evaporator Water Piping Connection Sizes

	Connection Size		
EVSZ	1 Pass	2 Pass	3 Pass
032	8	6	5
050	10	8	6
080	12	10	8
142	16	12	10
210	16	14	12
250	16	14	12

Table 2
Condenser Water Piping Connection Sizes

	Connection Size
CDSZ	2 Pass
032	6
050	8
080	10
142	12
210	14
250	14

Note: CDSZ =Condenser Shell Size; S = Short Shell, L = Long Shell, E = Extended Shell

Figure 4
Typical CVHE Grooved Pipe Connection

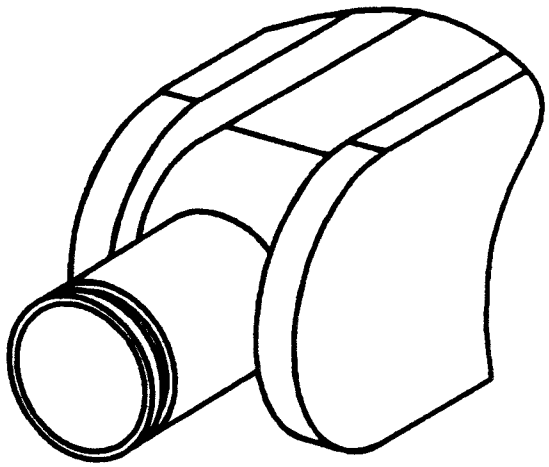

Table 3
Water Piping Connection Components

		Customer Piping Connection	
Unit Model	**Unit Connection Type**	**Victualic®**	**Flanged**
CVHE/CVHG	Flanged (Condenser 032-050 150 psig non-marine only)	Trane provided Victaulic-to-Flange Adapter	No Adapter Required
CVHE/F/G	Victaulic (All others)	Customer provided Victaulic Coupling	Trane provided Victaulic-to-Flange Adapter

Grooved Pipe Coupling

A customer-supplied, standard flexible grooved pipe coupling (Victaulic Style 77 or equivalent) should be used to complete the Victaulic connection for both 150 and 300 psig water boxes. See Table 3.

When a flexible coupling such as this is installed at the water box connections (Figure 5), other flexible piping connectors (i.e., braided-steel, elastomeric arch, etc.) are usually not required to attenuate vibration and/or prevent stress on the connections.

Note: Flexible coupling gaskets require proper lubrication before installation to provide a good seal. Refer to the coupling manufacturer's guidelines for proper lubricant type and application.

Figure 5
Customer Piping Alternatives for Water Connections

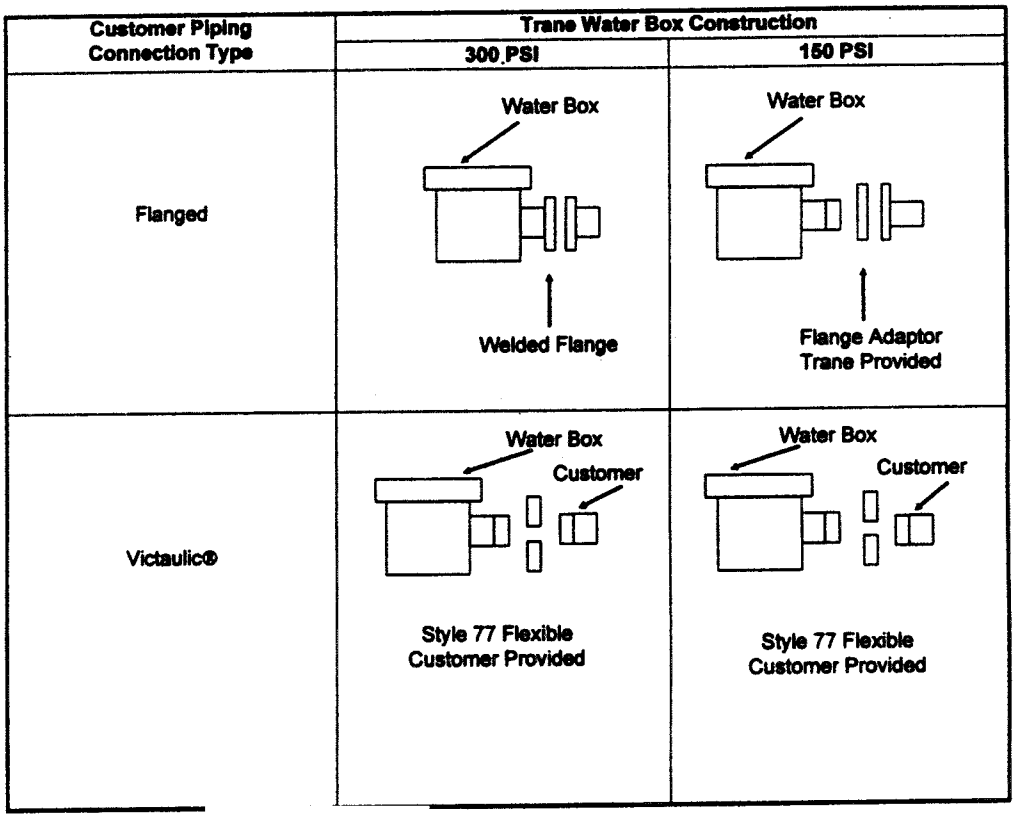

Flange-Connection Adapters

When flat-face flange connections are specified, flange-to-groove adapters are provided (Victaulic® Style 741 for 150 psig systems; Style 743 for 300 psig systems). Welded flanged connections are available only as a design special unless ordered as such, flange to groove adapters are provided if flat faced flange connections are specified. The adapters are shipped bolted to one of the chiller end-supports (Figure 6). Adapter weights are given in Tables 1 and 2. The flange adapters provide a direct, rigid connection of flanged components to the grooved-pipe chiller water box connections.

In this case, the use of flexible type connectors (i.e., braided steel, elastomeric arch, etc.) is recommended to attenuate vibration and/or prevent stress at the water box connections. Flange adapters are not provided for CVHE, CVHF, and CVHG units with 300 psig water boxes that have 14-inch or 16-inch piping connections.

All flange-to-flange assembly bolts must be provided by the installer. Bolt sizes and number required are given in Tables 1 and 2.

The four draw-bolts needed for the 14-inch and 16-inch Style 741 (150 psig) adapters are provided. The Style 741, 150 psig flange adapter requires a smooth, hard surface for a good seal.

Connection to other type flange faces (i.e., raised, serrated, rubber, etc.) will require the use of a flange washer between the faces. Refer to the flange adapter manufacturer's guidelines for specific information.

The Style 743, 300-psig flange adapters are designed to mate with raised-face flanges. They can be used with flat-faced flanges, however, if the raised projections on the outside face of the adapter are removed (Figure 8.)

Note: The flange-adapter gasket must be placed with the color-coded lip on the pipe and the other lip facing the mating flange.

⚠ **CAUTION**
GASKET-CONTACT SURFACES OF ADAPTER MUST BE FREE OF GOUGES, UNDULATIONS, OR DEFORMITIES. Failure to do so will not provide an effective seal.

Victaulic Gasket Installation

1. Check gasket and lubricate: Check gasket supplied to be certain it is suited for intended service. Code identifies gasket grade. Apply a thin coat of silicone lubricant to gasket tips and outside of gasket.

2. Install Gasket: Place gasket over pipe end, being sure gasket lip does not overhang pipe end. See Figure 7 for gasket configuration.

3. Join pipe ends: Align and bring two pipe ends together and slide gasket into position centered between the grooves on each pipe. No portion of the gasket should extend into the groove on either pipe.

4. **Apply Vic-Flange®**: Open fully and place hinged flange around the grooved pipe end with the circular key section locating into the groove.

5. Insert bolt: Insert a standard bolt through the mating holes of the Vic-Flange to secure the flange firmly in the groove.

6. Tighten nuts: Tighten nuts alternately and equally until housing bolt pads are firmly together (metal to metal). Excessive nut tightening is not necessary. **Note:** Uneven tightening may cause gasket to pinch.

Figure 6
Typical Shipping Location for Flange

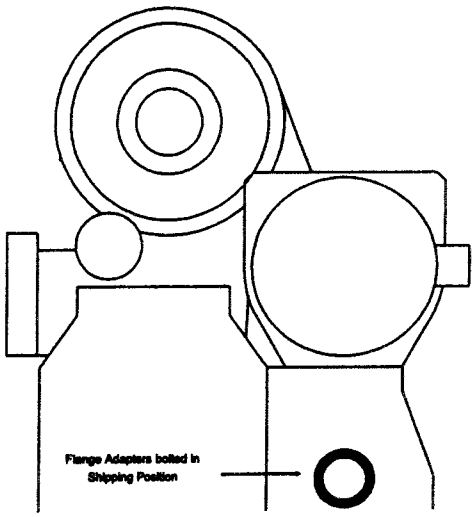

Figure 7
Typical Victaulic Flange Gasket Configuration

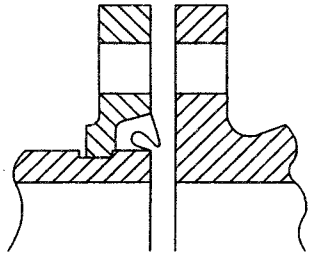

Figure 8
Modifying 300 PSIG Flange Adaptors for Flat-Faced Flange Application

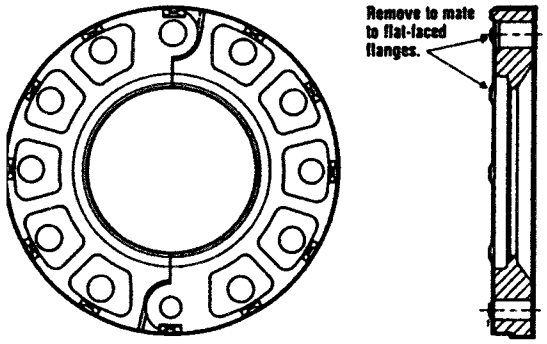

Table 4
Installation Data for 150 PSIG Flange Adapters

Nom. Size (In/mm)	Assy Bolt Size (In)*	No. Assy Bolts Req	Bolt Pattern Dia (In/mm)	Weight (Lbs/kg)
4/100	5/8 x 3	8	7.5/191	7.7/3.5
5/125	3/4 x 3-1/2	8	8.5/216	9.3/4.2
6/150	3/4 x 3-1/2	8	9.5/241	10.3/4.7
8/200	3/4 x 3-1/2	8	11.75/298	16.6/7.5
10/250	7/8 x 1/4	12	14.25/362	24.2/11.0
12/300	7/8 x 1/4	12	17.0/432	46.8/21.2
14/350	1 x 4-1/2	12	18.75/476	75.0/34.0
16/400	1 x 4-1/2	16	21.25/540	90.0/40.8

Table 5
Installation Data for 350 PSIG Flange Adapters

Nom. Size (In/mm)	Assy Bolt Size (In)*	No. Assy Bolts Req	Bolt Pattern Dia (In/mm)	Weight (Lbs/kg)
4/100	3/4 x 3-3/4	8	7.88/200	15.3/6.9
5/125	3/4 x 4	8	9.25/235	17.7/8.0
6/150	3/4 x 4-1/2	12	10.63/270	23.4/10.6
8/200	3/4 x 4-3/4	12	13.0/330	34.3/15.6
10/250	1 x 5-1/4	16	15.25/387	48.3/21.90
12/300	1-1/8 x 5-3/4	16	17.75/451	70.5/32.0

Bolt-Tightening Sequence for Water Piping Connections

A bolt-tightening sequence for flanges with flat gaskets or o-rings is described below and shown in Figure 9. Remember that improperly tightened flanges may leak.

Note: Before tightening any of the bolts, align the flanges. Flange bolt torque requirements are given in Table 6.

Flanges with 4, 8 or 12 Bolts

See Figure 9. Tighten all bolts to a snug tightness, following the appropriate numerical sequence for the flange. Repeat this sequence to apply the final torque to each bolt.

Flanges with 16, 20 or 24 Bolts

See Figure 9. Following the appropriate numbered sequence, tighten only the first half of the total number of bolts to a snug tightness. Next, sequentially tighten the remaining half of the bolts in the proper order.

Flanges with More than 24 Bolts

Refer to Figure 9 and sequentially tighten the first 12 bolts to a snug tightness. Tighten the next 12 consecutively numbered bolts in sequence, to the final torque.

Then, apply final torque to the first 12 bolts and the bolts not yet tightened (i.e., unnumbered bolts in Figure 9). Be sure to start with bolt "1" and move progressively around the flange in a clockwise direction.

Evaporator Water Box Covers

See Figure 9. Ensure that the water box head rests tightly against the tube sheet; then snugly tighten the 26 bolts in sequential order.

If excessive tube sheet crown prevents the head from contacting the tube sheet, tighten the bolts located where the greatest gaps occur. Be sure to use an equal number of bolt turns from side to side.

Table 6
Flange Bolt Torque Recommendations for O-Ring and Flat-Gasket Piping Connections

Bolt Size (Inch)	Gasket Type	
	O-Ring	Flat
3/8	25 (34)	12-18 (16-24)
1/2	70 (95)	33-50 (45-68)
5/8	150 (203)	70-90 (95-122)
3/4	250 (339)	105-155 (142-210)

Note: Torques provided in Ft/Lbs. (Newton/metres)

Figure 9
Bolt Tightening Sequences for Water Piping Flanges and Water Boxes

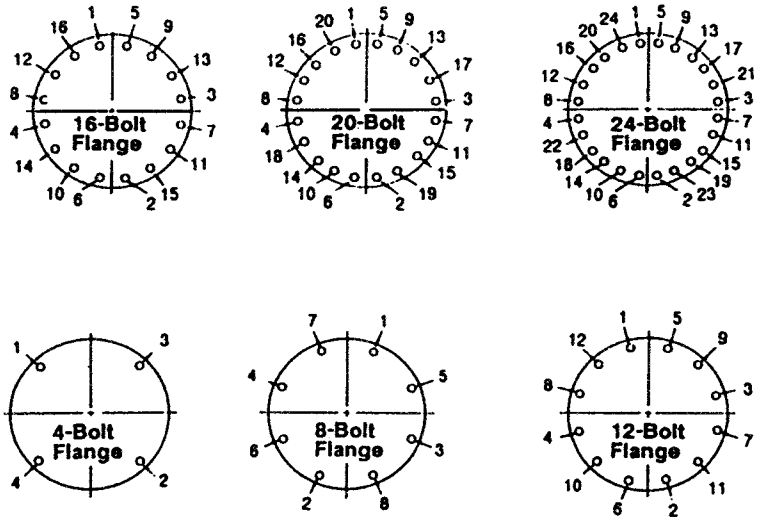

Flanges with more than 24 bolts

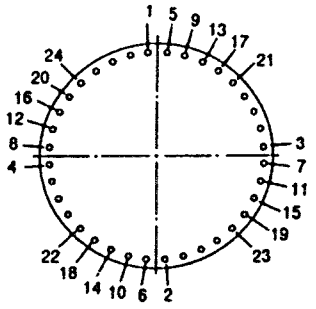

Evaporator Water Box Covers

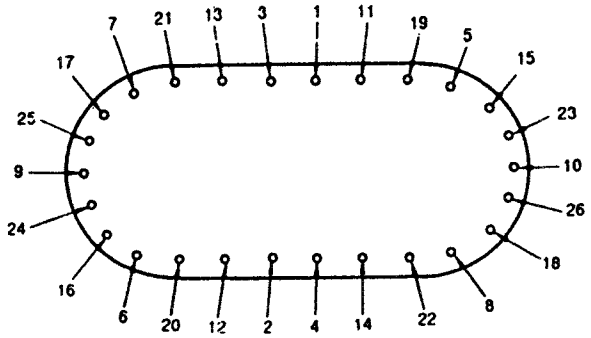

Purifier Purge Requirements

Purge Installation

For certain CenTraVacs, the purge system is not mounted on the chiller when it ships. For 800-ton heat recovery chillers and 1250 and 1400 ton chillers with auxiliary condensers, the Purifier Purge is shipped in a separate container that is secured to the chiller shipping skid.

Install the purge system in accordance with the following instructions.

1. Remove Purifier Purge from its shipping brackets or container.

2. Disconnect purge gas and liquid lines and conduit from shipping bracket that spans purge supports on top of the heating or auxiliary condenser.

3. Remove shipping bracket and screws from purge supports and discard.

4. Locate purge on top of supports (purge base goes outside supports).

5. Secure purge to supports with four 1/4-20 x 1/2 long hex head thread rolling screws provided with unit.

6. Remove purge control panel access cover.

7. Connect 90° conduit connector to open 7/8 diameter hole on side of control panel.

8. Connect conduit wires to terminal block in control panel as shown in wiring connection detail.

9. Replace access cover on control panel.

10. Braze 1/4" FL and 5/8 ODS copper lines to purge per A.W.S. B CUP-3, 1/4: ODSW copper coupling provided with unit.

11. Open gas and liquid line ball valves before operating unit.

Refrigerant Vent-Line

General Recommendations

Both the purge and rupture disc vent lines must be routed to outside atmosphere. Use only material compatible with the refrigerant in use. The use of PVC (not CPVC) piping is acceptable if the pipe joint is properly primed and if the adhesive used has been tested for refrigerant compatibility. Testing conducted in Trane laboratories has approved the use of the following materials for PVC pipe construction.

Primer - Hercules, PVC Primer #60-465, RectorSeal PVC Cleaner -Smiling Sam CL-3 Adhesive-Hercules, Clear PVC, Medium Body, Medium Set, #60-020 RectorSeal PVC Cement -Green Gene 104.

Consult with the manufacturers of any field-provided components or materials added to the refrigerant-side of the machine for acceptable material compatibility.

During vent line construction, provide a drip leg on the line that is of sufficient length to accommodate a minimum of one gallon of liquid. Provide a standard 1/4" FL x 1/4" NPT, capped refrigerant service valve to facilitate liquid removal. Accumulated liquid must be drained from the drip leg into an evacuated waste container once every six months, at a minimum, and more often if the purge operates excessively.

Purge Discharge Vent Line

On CVHE, CVHF, CVHG units, the purge discharge is factory-piped downstream of the rupture disc on the unit.

Rupture Disc Vent Installation

All CenTraVac® chillers are equipped with carbon rupture discs. A cross-section of the rupture disc assembly appears in Figure 10 along with an illustration indicating the location of the rupture disc on the suction elbow.

If refrigerant pressure within the evaporator exceeds 15 psig, the rupture disc breaks, shell pressure is relieved as refrigerant escapes from the chiller.

When constructing the rupture disc vent line, be sure to consult local codes for applicable guidelines and constraints.

Several general recommendations for rupture disc vent line installation are outlined below.

1. Verify that the vacuum support side of the rupture disc is positioned as shown in the cross-section view that appears in Figure 10.

Note: If the rupture disc was removed for any reason, it must be reinstalled as shown.

2. Do not apply threading torque to the outside pipe assembly when installing the connecting pipe.

⚠ CAUTION

Applying threading torque to the outside pipe may damage the rupture disc assembly.

3. Support the vent piping, use a flexible connection to avoid placing stress on the rupture disc. (Stress can alter rupture pressure and cause the disc to break prematurely.)

The flexible connector used to isolate the rupture disc from excessive vent line vibration must be compatible with the refrigerant in use. Use a flexible, steel connector such as the stainless-steel type MFP, style HNE, flexible pump connector (from Vibration Mounting and Control, Inc.) or equivalent.

See Figure 11 for a recommended relief piping arrangement.

Important: Vent pipe size must conform to ANSI/ASHRAE Standard Standard 15, which discusses vent pipe sizing.

Use Table 7 and then Figure 12 to determine proper vent pipe size.

Note: To determine the total "C" value for a specific unit, add the appropriate "C" values for the evaporator, standard condenser and economizer. If the unit is equipped with any options (e.g., heat recovery, free cooling, or an auxiliary condenser), add the applicable "C" value(s) to this total.

With this new sum, refer to Figure 12 to determine the vent line pipe diameter needed to handle flow.

4. Normally, where multiple chillers are used, install a separate rupture disc vent line for each unit.

5. Consult local regulations for any special relief line requirements and refer to CFC-Guide-2.

6. The discharge of the vent line outside should not be in the general vicinity of any fresh air intakes to the building. Any gas venting from the vent line should not be allowed to re-enter the building.

Figure 10
Illustrates Rupture Disc Location, Cross Section of Rupture Disc and Recommended Rupture Disc Relief Piping

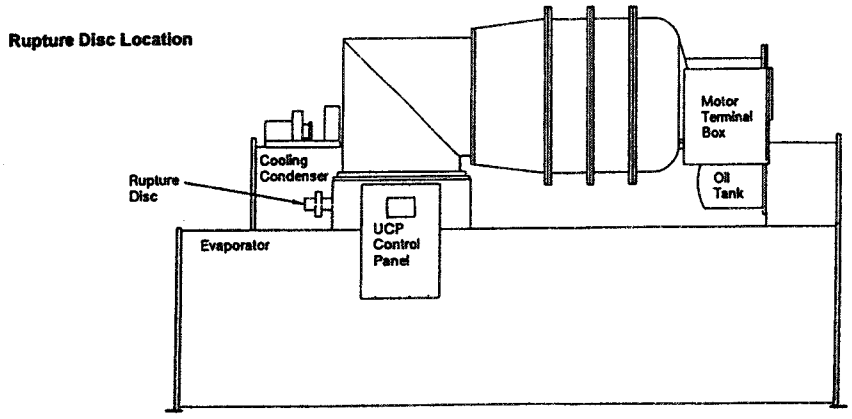

Cross Section of Rupture Disc

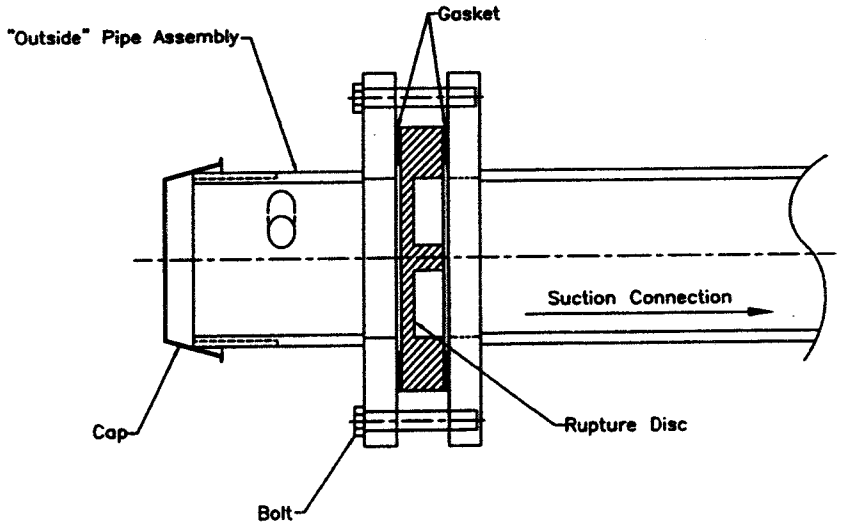

Figure 11
Arrangement for Rupture Disc Relief Piping

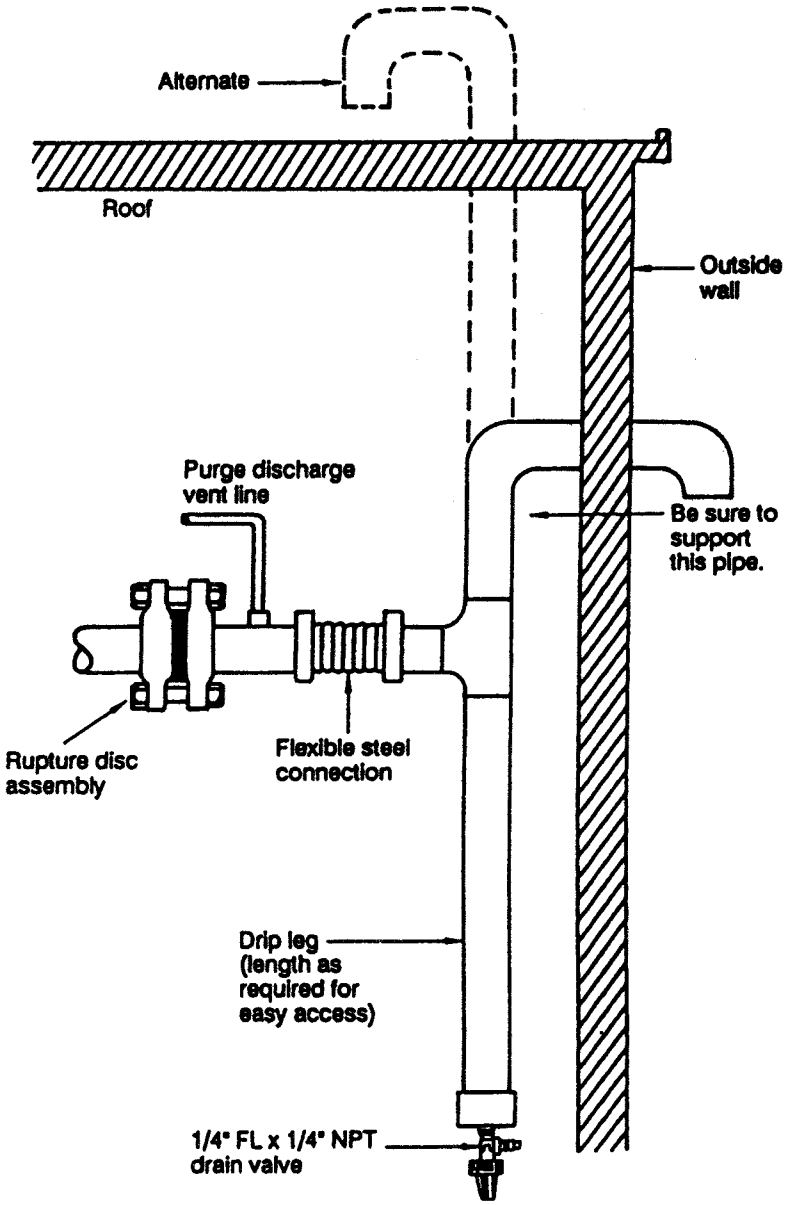

Table 7
"C" Values Used to Determine Rupture Disc Vent Line Sizes

Evap Size (EVSZ) (3)	Cond Size (CDSZ) (4)	"C" Values for Unit Components							
		Rupt Disc Dia	Evap	Std Cond	Econ	Short H.R. Cond	Long H.R. Cond	Aux Cond	With Free Cool
032S	032S	3"	26.25	18.87	4.85	18.87	25.19	15.28	4.16
032S	032L		26.25	25.19					
032L	032L		35.04	25.19					
050S	050S		33.05	23.56	7.44	23.56	31.45		6.16
050S	050L		33.05	31.45					
050L	050L		44.13	31.45					
080S	080S		45.59	29.06	11.63	29.06	38.80		5.87
080S	080L		45.59	38.80					
080L	080L		60.86	38.80					
142E	142L		74.30	50.50	17.40	N/A	Des. Spec		Des. Spec
142M	142L		58.47	50.50			50.50		7.10
142L	142L		68.86	50.50					
210L	210L		75.16	56.72			N/A		
250E	250L		93.81	62.12			56.72		

Notes:

1. To determine the total "C" value for a specific unit, add the appropriate ""C" values for the evaporator, standard condenser and economizer. If the unit is equipped with any options (e.g., heat recovery, free cooling or an auxiliary condenser, add the applicable "C" values to this total. With this new sum, refer to Figure 12 to determine the vent line pipe diameter.

2. If piping multiple rupture discs (multiple units) to a common vent line, first determine the total"C" value for each unit, and then; add all "C" values together and apply the result to the "vent pipe sizing chart" in Figure 12.

3. EVSZ = Evaporator Shell Size;
   S = Short Shell
   L = Long Shell
   E = Extended Shell
   M = Medium

4. CDSZ = Condenser Shell Size;
   S = Short Shell
   L = Long Shell
   E = Extended Shell

Figure 12
Rupture Disc Vent Pipe Sizing

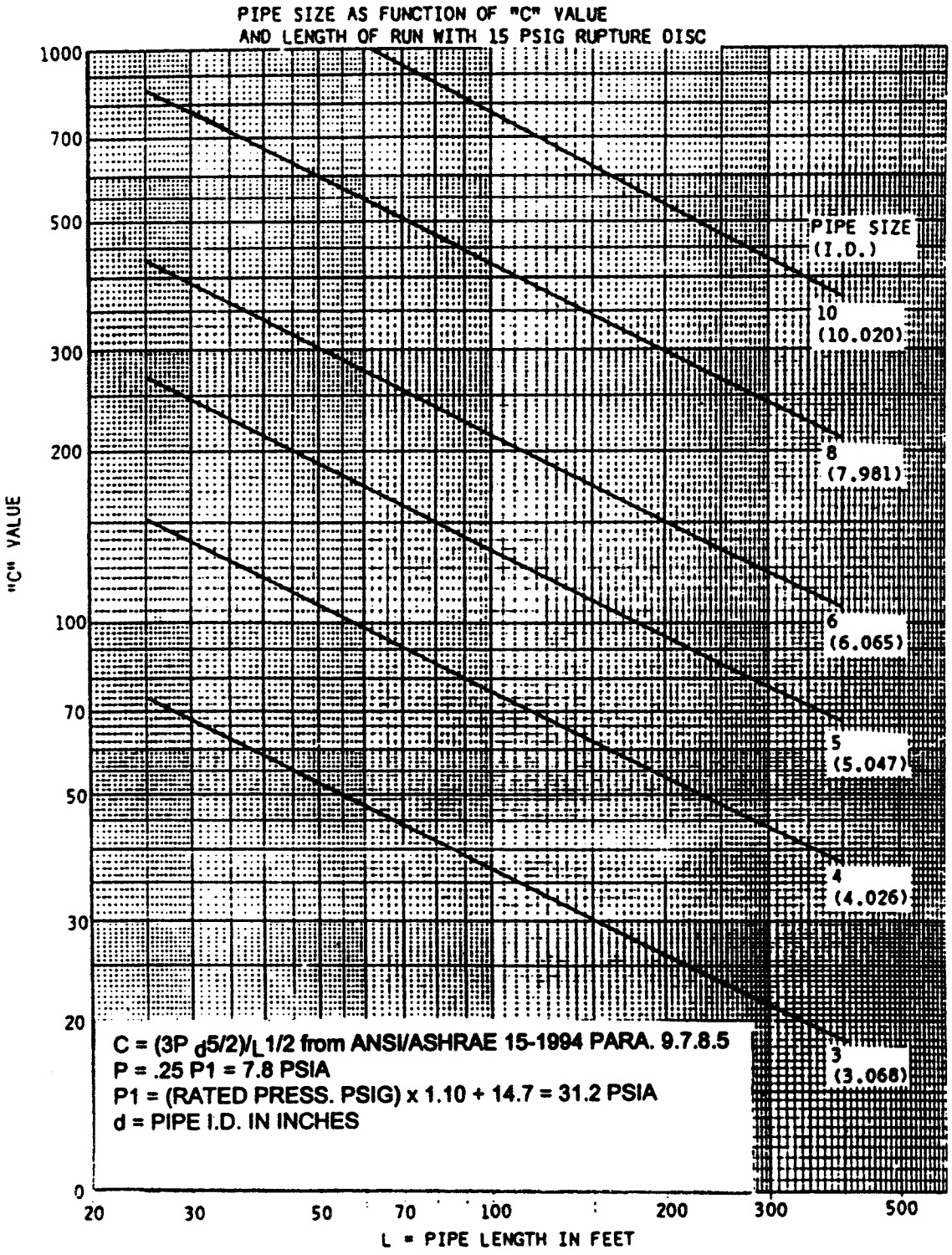

Unit Insulation Requirements

Factory-installed insulation is available as an option for all CVHE, CVHF and CVHG units.

Important: Refer to notes included with Table 8 because units with refrigerant pumps are insulated differently than units without refrigerant pumps.

In those instances where the chiller is not factory-insulated, install insulation over the areas shaded in Figure 13. It may also be necessary to insulate the compressor suction cover if the unit is installed in an area subjected to high humidities.

Insulate both 1/4" eductor lines, one from the suction cover and one from the evaporator to prevent sweating.

The quantities of installation required based on unit size and insulation thickness are listed in Table 8. Insulation thickness is determined at normal design conditions which are:

- 85°
- 75% Relative Humidity

Note: If the unit is not factory-insulated: Install insulation around the evaporator bulbwells; and, ensure that the bulbwells and connections for the water box drains and vents are still accessible after insulation is applied.

⚠ CAUTION
IN ORDER TO PREVENT DAMAGE TO FACTORY-INSTALLED INSULATION, do not allow the insulation to be exposed to excessive sunlight.

Table 8
Evaporator Insulation Requirements

EVSZ (Note 1)	Standard Unit		Free Cooling	
	3/4" Insulation (Note 3)	3/8" Insulation (Note 4)	3/4" Insulation (Note 3)	3/8" Insulation (Note 4)
032S	337 Sq. Ft.	52 Sq. Ft.	347 Sq. Ft.	74 Sq. Ft.
032L	365 Sq. Ft.	52 Sq. Ft.	377 Sq. Ft.	74 Sq. Ft.
050S	385 Sq. Ft.	63 Sq. Ft.	398 Sq. Ft.	72 Sq. Ft.
050L	420 Sq. Ft.	63 Sq. Ft.	436 Sq. Ft.	72 Sq. Ft.
080S	505 Sq. Ft.	84 Sq. Ft.	515 Sq. Ft.	97 Sq. Ft.
080L	553 Sq. Ft.	84 Sq. Ft.	566 Sq. Ft.	97 Sq. Ft.
142M	555 Sq. Ft.	98 Sq. Ft.	555 Sq. Ft.	133 Sq. Ft.
142L	578 Sq. Ft.	98 Sq. Ft.	578 Sq. Ft.	133 Sq. Ft.
142E	603 Sq. Ft.	104 Sq. Ft.	629 Sq. Ft.	133 Sq. Ft.
210L	700 Sq. Ft.	98 Sq. Ft.	710 Sq. Ft.	133 Sq. Ft.
210D	1220 Sq. Ft.	193 Sq. Ft.	N/A	N/A
250 D	1308 Sq. Ft.	193 Sq. Ft.	N/A	N/A
250 E	770 Sq. Ft.	97 Sq. Ft.	N/A	N/A

Notes:
1. EVSZ = Evaporator Shell Size, L = Long Shell, S = Short Shell
2. D = Duplex, M = Medium, E = Extended
3. 3/4" sheet insulation is installed on the evaporator, evaporator water boxes, suction elbow and suction cover as indicated in Figure 13.
4. 3/8" sheet insulation is installed on all economizers. All liquid lines and other pipes require the use of 1/2" pipe insulation or 3/8" sheet insulation. Copper oil eductor tube lines require pipe insulation.

CAUTION
⚠ IF THE INSULATION WILL BE PAINTED IN THE FIELD, USE ONLY WATER-BASED LATEX PAINTS. Thinners and solvents used or other types of paints may cause seams in the insulation to open as a result of shrinkage.

High Humidity Option

Note: The High Humidity Option is not used on units with the Refrigerant Pump.

Figure 13
Recommended Areas for Unit Insulation

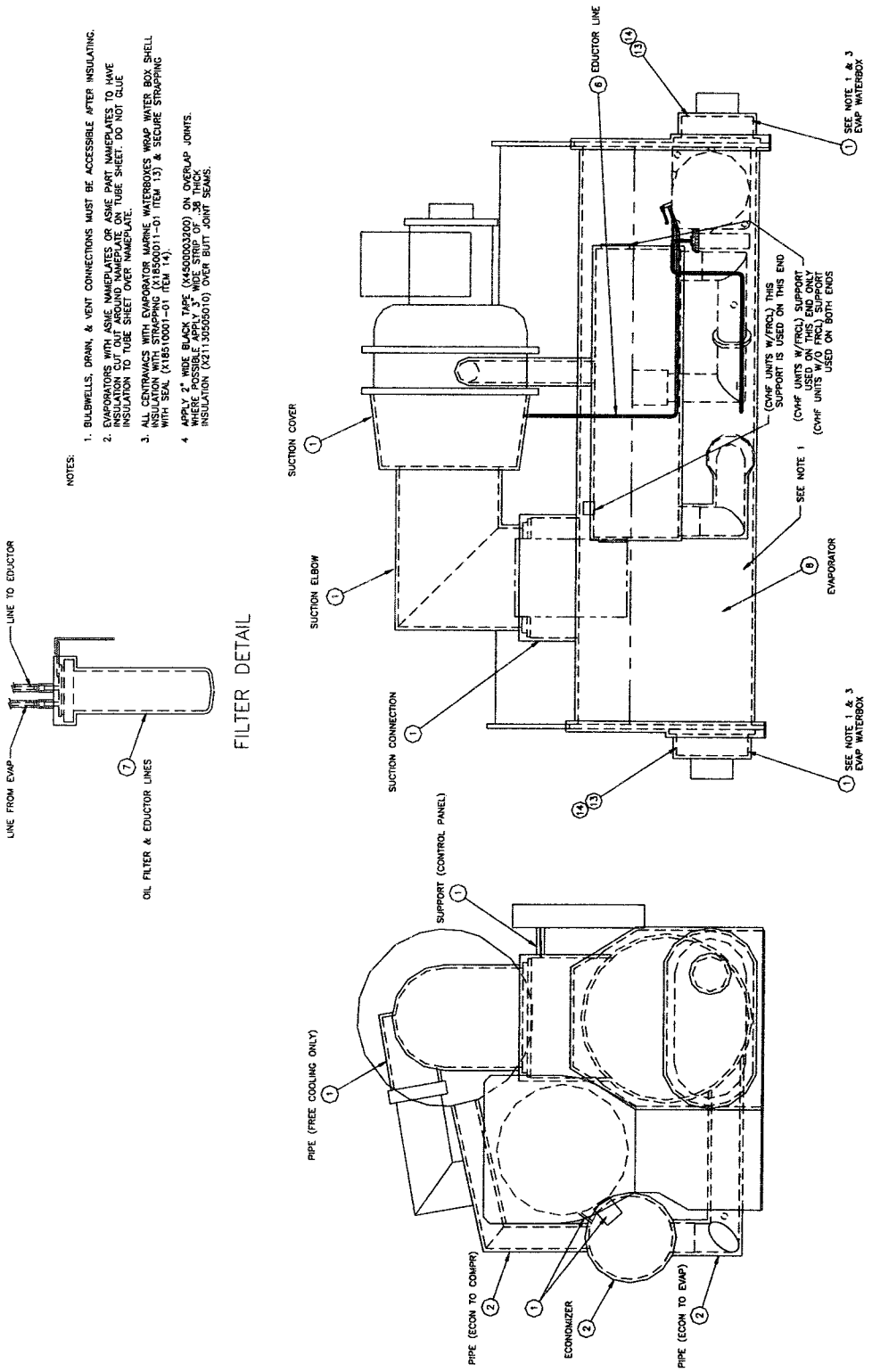

Installation - Electrical

CVHE-IN-11C

Library	Service Literature
Product Section	Refrigeration
Product	Centrifugal Liquid Chillers, Water-Cooled
Model	CVHE, CVHF, CVHG Cooling Only & Heat Recovery
Literature Type	Electrical - Installation
Sequence	11C
Date	February 1, 2001
File No.	SV-RF-CTV-CVHE-IN-11C-2001
Supersedes	SV-RF-CTV-CVHE-IN-11B-2000

Three manuals ship together as Installation information:

CVHE-IN-9C - General Information
CVHE-IN-10C - Water Piping
CVHE-IN-11C - Electrical

Water Cooled CenTraVac®

Design Sequence	
CVHE "3G"	CVHE 60 HZ 230, 250, 280, 320, 360, 400, 450, 500
	CVHE 50 HZ 190, 210, 240, 270, 300, 330, 370, 420
CVHF "1T"	CVHF 60 HZ 350, 410, 485, 555, 640, 650, 770, 910, 1060, 1280, 1470, 1720
CVHG "1J"	CVHG 50 HZ 350, 410, 480, 565, 670, 780, 1067

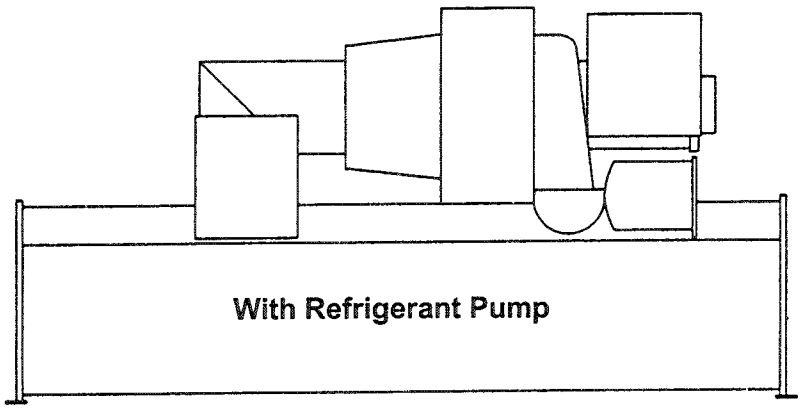

With Refrigerant Pump

X39640505-04

Since the Trane Company has a policy of continuous product and product data improvement, it reserves the right to change design and specifications and without notice. Only qualified technicians should perform the installation and servicing of equipment referred to in this publication.

Warnings and Cautions

NOTICE

Warnings and Cautions appear at appropriate locations throughout this manual. Read these carefully.

WARNING: Indicates a potentially hazardous situation which, if not avoided, could result in death or serious injury.

CAUTION: Indicates a potentially hazardous situation which, if not avoided, may result in minor or moderate injury. It may also be used to alert against unsafe practices and where property-damage-only accidents could occur.

©American Standard Inc 2001

Table of Contents

Subject		Page Number
Warnings and Cautions		2
General Requirements		4
Adaptive Frequency Drive Option		4
Power Supply Wiring		6
3-Phase Power Source		6
Circuit Breakers and Fusible Disconnects		6
Optional PFCCs		7
Interconnecting Wiring		8
Starter to Motor (Remote-Mounted Starters Only and Adjustable Frequency Drive		10
Starter to UCP (Remote-Mounted Starters Only and Adjustable Frequency Drive)		10
Purge Control Panel to UCP (Field Installed Purge Only		10
UCP Electrical Specifications		12
Control Circuit Wiring		12
Interlock Circuits		12
Temperature Sensor Circuits		13
Optional Relay Circuits		13
Optional Tracer Communication Interface		13
Unit Start-Up		15
Forms Information		15
Wiring Drawing Addendum		15
Figures		**Page Number**
Proper Phasing for Starter Power Supply Wiring	Figure 1	6
PFCC Leads Routed through Overload Current Transformer	Figure 2	7
Typical Equip Room Layout w/ Unit Mounted Wye-Delta Starter	Figure 3	8
Typical Equip Room Layout w/Remote Mounted Wye-Delta Starter	Figure 4	9
Terminal Stud, Clamp and Lug Assembly	Figure 5	11
UCP2 Control Panel Connections	Figure 6	11
Field Installed Purge	Figure 7	12
Communication/Control Network to Chiller Units with UCP2	Figure 8	14
Typical Sequence of Operation for a Unit-Mounted Wye-Delta Starter	Figure 9	27
Tables		**Page Number**
Field Wiring Requirements	Table 1	5
PFCC Sizing per Compressor Voltage Application	Table 2	7
Sequence of Operation for UCP2 CVHE, CVHF, CVHG Maximum Accel. Time	Table 3	27

Note: Unit-mounted starters are available as an option on CVHE, CVHF, CVHG units with RLAs of 1315 amps or less, and with a nominal voltage of no more than 600 volts.

While this option eliminates most field-installed wiring requirements, the electrical contractor must still complete the electrical connection for: (1) Power supply wiring to the starter, (2) Other unit control options present, and (3) Any field-supplied control devices

General Requirements

⚠ WARNING
LOCK SUPPLY POWER AND CHILLER DISCONNECT SWITCHES OPEN. Failure to do so could result in injury or death due to electrical shock or contact with moving parts.

As you review this manual, along with the wiring instructions presented in this section, keep in mind that:

Typical field connection requirements for remote-mounted starters are shown in fold-out drawings at the end of the manual, respectively, and summarized in Table 1.

All field-installed wiring must conform to NEC guidelines, as well as to any applicable state and local codes. Be sure to satisfy proper equipment grounding requirements per NEC.

Compressor motor electrical data including motor kw, voltage utilization range, rated load amps and locked rotor amps is listed in Tables 2 through 13 for your reference.

All field-installed wiring should be checked for proper terminations, and for possible shorts or grounds.

Note: The typical customer connection diagrams shown in this manual are representative of standard CVHE, CVHF CVHG units, and are provided only for general reference. Always refer to the actual wiring diagrams that shipped with the chiller for specific as built electrical schematic and connection information.

Adaptive Frequency Drive Option

The following information is recommended when installing a drive.

Do not cut Adaptive Frequency Drive enclosure to provide electrical access. Removable panels have been provided for this purpose. Modify these panels only; away from enclosure. Refer to installation information shipped with the adjustable frequency drive or submittal drawings.

⚠ WARNING
DO NOT CUT ADAPTIVE FREQUENCY DRIVE ENCLOSURE, debris falling inside drive may cause failure of electronic components.

Table 1
Field Wiring Requirements

Description of Wiring Power Supply Wiring	Starter Panel Terminals	UCP Terminations
Standard Wiring: (To Terminal Block)		
3-Phase Power Supply	2TB2: G, L3, L2, L1	n/a
Starter/Motor Junction Box Interconnection (Remote Starter Only)	T1 thru T6 (as applicable by Starter Type)	n/a
Alternate Wiring: (To Circuit Breaker)		
3-Phase Power Supply	2CB1: G, L3, L2, L1	n/a
120 VAC Control Wiring		
Standard Circuits		
Chilled Water Flow Proving	n/a	1TB-10, 12 (incl. 5S1, 5K1)
Condenser Water Flow Proving	n/a	1TB1-11, 13 (incl. 5S2, 5K2)
Chilled Water Pump Relay	n/a	1U1-J12-1,2
Condenser Water Pump Relay	n/a	1U1-J14-1,2
UCP Ground Connection	n/a	G
120V Power Supply to UCP	2TB1-1, 2TB1-2	1TB1-1, 1TB-2
High Pressure Cutout	2TB1-6, 2TB1-4	1TB1-5, 1TB1-9
Oil Pump Interlock	2TB1-8, 2TB1-9	1TB1-7, 1TB1-8
Optional Wiring		
Compressor Running Relay	n/a	1U1-J16-1, 2, 3
Alarm Relay MMR	n/a	1U1-J18-1, 2, 3
Alarm Relay MAR	n/a	1U1-J22-1, 2
Limit Warning Relay	n/a	1U1-J20-1, 2,
<30 VAC Control Wiring		
Optional Wiring		
External Autostop	n/a	1U1-J5, 1, 2
Emergency Stop	n/a	1U1-J5-3, 4
Outdoor Air Temp Sensor	n/a	1U1-J5-5, 6
External Condenser Pressure Output	n/a	1U2-J7-1, 2
External Heat Pump Control	n/a	1U1-J7-5, 6
Ext. Base Loading Setpoint	n/a	1U1-J7-11, 12
Options Module Wiring		
External Free Cooling Switch	n/a	1U5-J3-5, 6
External Ice Machine Control Enable	n/a	1U5-J3-7, 8
% RLA Output	n/a	1U5-J7-3, 4
External Current Limit Setpoint	n/a	1U5-J7-11, 12
External Chilled Water Setpoint	n/a	1U5-J9-4, 5
Ice Making Relay	n/a	1U5-J8-1, 2
Tracer Controlled Relay	n/a	1U5-J18-1, 2, 3

Power Supply Wiring

To assure that power supply wiring to the starter panel is properly installed and connected, review and follow the guidelines outlined below.

3-Phase Power Source

1. Verify that the starter nameplate ratings are compatible with the power supply characteristics and with the electrical data on the unit nameplate.

2. If the starter enclosure must be cut to provide electrical access, exercise care to prevent debris from falling inside the enclosure. If the starter cabinet has a removable panel, be sure to remove the panel from the unit before drilling holes.

⚠ CAUTION
TO AVOID DAMAGE TO STARTER COMPONENTS, remove debris inside the starter panel which may cause an electrical short that seriously damages the starter components.

3. Use copper conductors to connect the 3-phase power supply to the remote or unit-mounted starter panel.

⚠ CAUTION
TO AVOID CORROSION OR OVERHEATING, use only copper conductors for terminal connections.

4. Size the power supply wiring in accordance with NEC, using the RLA value stamped on the chiller nameplate and control power load on L1 and L2.

5. Make sure that the incoming power wiring is properly phased; each power supply conduit run to the starter must carry the correct number of conductors to ensure equal phase representation. See Figure 1.

6. As you install the power supply conduit, make sure that this position does not interfere with the serviceability of any of the unit components, nor with structural members and equipment.

Also, assure that the conduit is long enough to simplify any servicing that may be necessary in the future (e.g., starter removal).

Note: Use flexible conduit to enhance serviceability and minimize vibration transmission.

Circuit Breakers and Fusible Disconnects

Size the circuit breaker or fuse disconnect in compliance with NEC or local guidelines.

Figure 1
Proper Phasing for Starter Power Supply Wiring

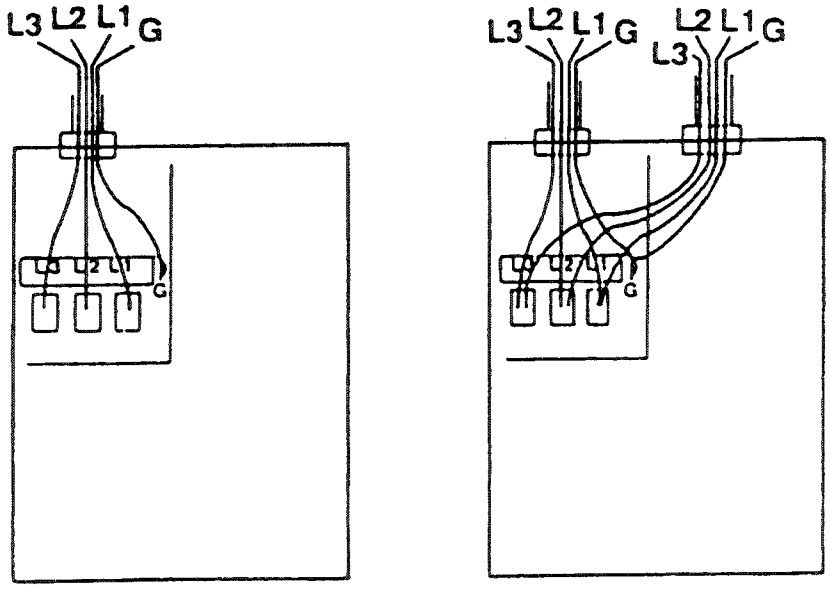

Optional PFCCs

Power factor correction capacitors (PFCCs) are designed to provide power factor correction for the compressor motor. They are available as an option.

Note: Remember that the PFCC nameplate voltage rating must be greater than or equal to the compressor voltage rating stamped on the unit nameplate. See Table 16 to determine what PFCC voltage rating is appropriate for each compressor voltage application.

⚠ CAUTION

PFCCS MUST BE WIRED INTO THE STARTER CORRECTLY! Misapplication of these capacitors could result in a loss of motor overload protection subsequently cause motor damage.

Table 2
PFCC Sizing per Compressor Voltage Application

PFCC Design Voltage	Compressor Motor Rating (See Unit Nameplate)
240/60Hz	208V/60Hz
480V/60Hz	380V/60Hz 440V/60Hz 460V/60Hz 480V/60Hz
600V/60Hz	575V/60Hz 600V/60Hz
2400V/60Hz	2300V/60Hz 2400V/60Hz

Table 2 Continued

PFCC Rating	Compressor Motor Rating (See Unit Nameplate)
480V/50 Hz	346V/50 HZ 380V/50 HZ 400V/50 Hz 415V/50 Hz
4160V/50Hz	3300V/50 Hz

Figure 2
PFCC Leads Routed through Overload Current Transformer

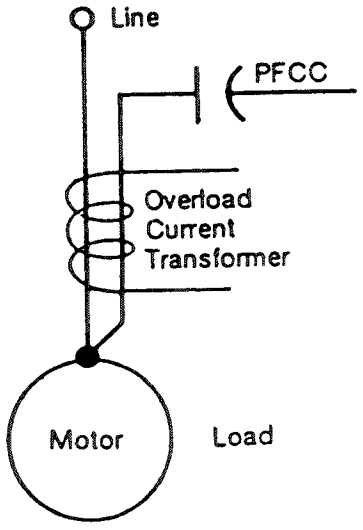

Note: See CTV-EB-44 for more details.

Interconnecting Wiring

Typical equipment room conduit layouts with and without unit-mounted starters are shown in Figures 3 and 4, respectively.

Keep in mind that the interconnecting wiring between the starter panel, compressor and UCP2 control panel is factory-installed with unit-mounted starters but must be field-installed when a remote-mounted starter is used.

Figure 3
Typical Equipment Room Layout w/Unit-Mounted, Wye-Delta

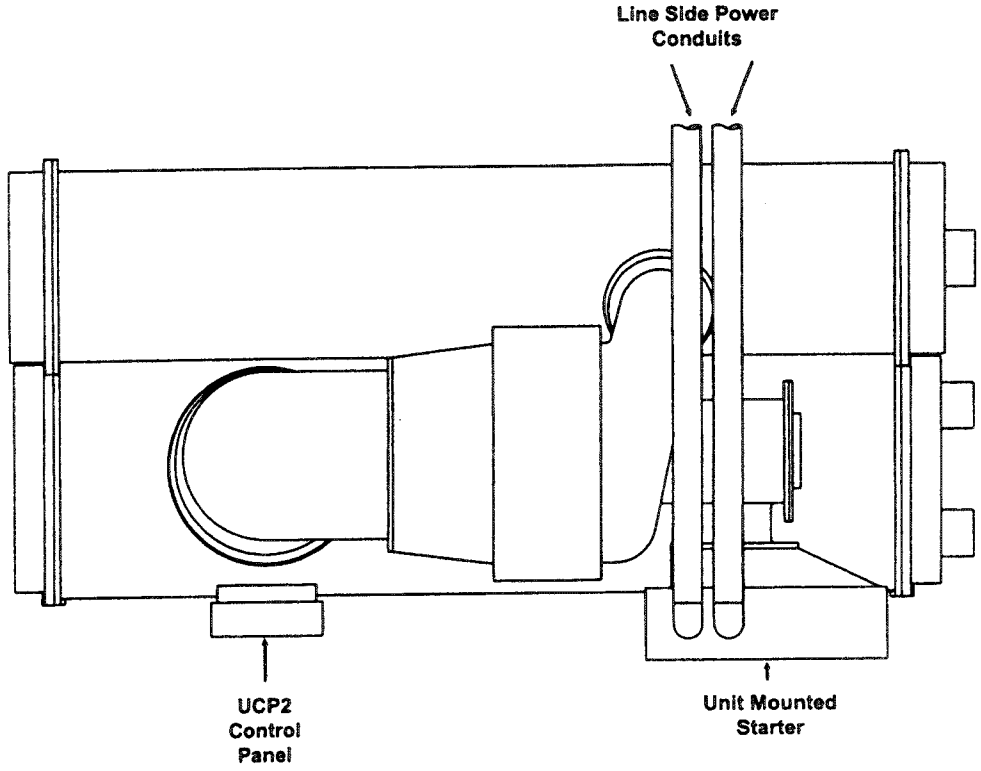

Note:
See Starter submittal drawing for location of incoming wiring to the starter.

⚠ CAUTION
TO PREVENT DAMAGE TO THE UCP'S COMPONENTS, do not route control circuit conduit into the top of the UCP enclosure.

Figure 4
Typical Equipment Room
Layout w/Remote-Mounted Wye-Delta Starter

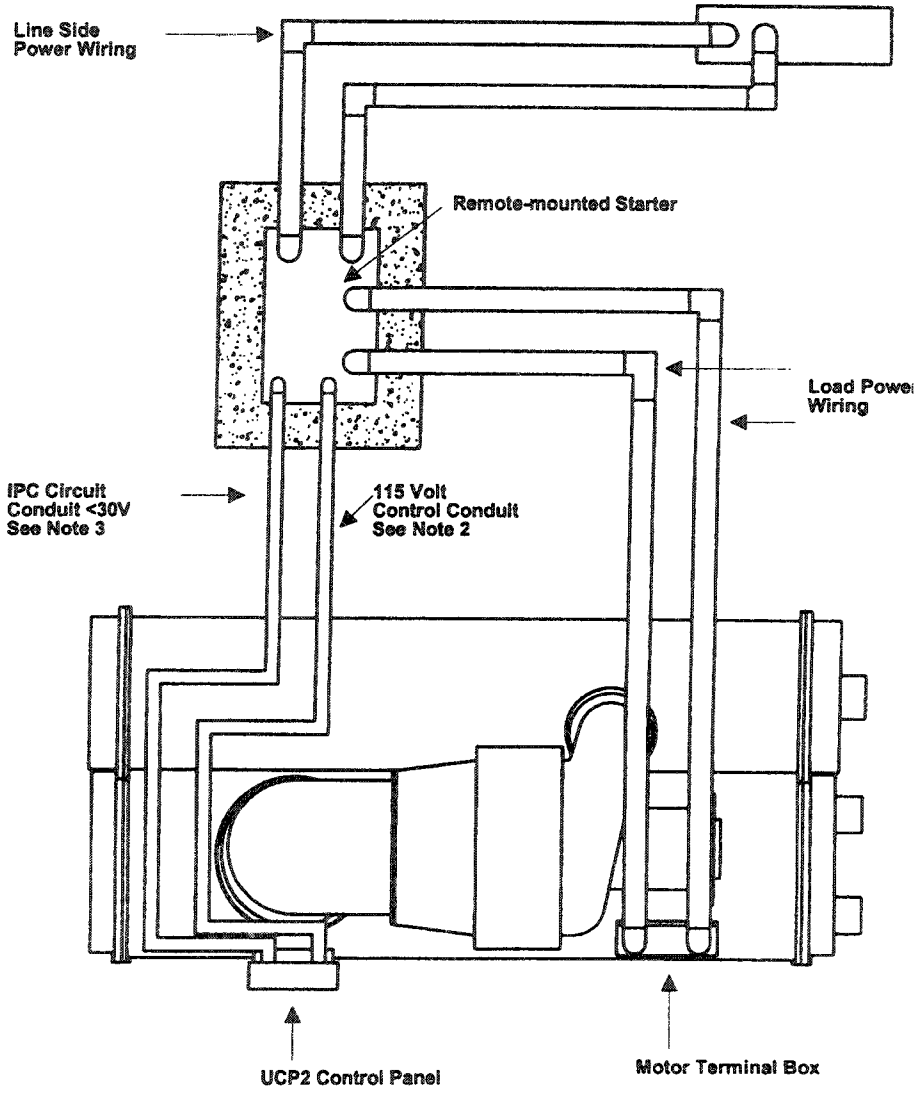

⚠ CAUTION
DO NOT ROUTE CONTROL CIRCUIT CONDUIT INTO THE TOP OF THE UCP ENCLOSURE. Failure to follow the above caution, could result in damage to the UCP components.

Notes:
1. Refer to the unit field connection diagram for approximate UCP knockout locations.
2. 115-Volt conduit must enter the right back portion of the unit control panel.
3. IPC circuit conduit must enter the left back portion of the UCP.
4. See starter submittal drawing for location of incoming wiring to the starter.

Starter to Motor (Remote-Mounted Starters Only)

Ground Wire Terminal Lugs. Ground wire lugs are provided in the motor terminal box and in the starter panel.

Terminal Clamps. Terminal clamps are supplied with the motor terminals to accommodate either bus bars or standard motor terminal wire lugs. Terminal clamps provide additional surface area to minimize the possibility of improper electrical connections.

Wire Terminal Lugs. Wire terminal lugs must be field-supplied.

1. Use field-provided crimp-type wire terminal lugs properly sized for the application.

Note: Wire size ranges for the starter line and load-side lugs are listed on the starter submittal drawings supplied by the starter manufacturer and/or Trane. Carefully review the submitted wire lug sizes for compatibility with the conductor sizes specified by the electrical engineer or contractor.

2. A terminal clamp with a 3/8" bolt is provided on each motor terminal stud; use the factory-supplied Belleville washers on the wire lug connections.

Figure 5 illustrates the juncture between a motor connection pad and the wire terminal lug.

3. Tighten each bolt to 24 foot-pounds.

4. Install but do not connect the power leads between the starter and compressor motor. (These connections will be completed under supervision of a qualified Trane service engineer after the prestart inspection).

Bus Bars. Install the bus bars between the motor terminals when a low-voltage "across-the-line", "primary reactor/resistor" or "auto transformer" is used.

Be sure to bus motor terminal T1 to T6, T2 to T4, and T3 to T5.

Note: Bus bars are not needed in high-voltage applications since only 3 terminals are used in the motor and starter.

Starter to UCP (Remote-Mounted Starters)

Electrical connections required between the remote-mounted starter and the chiller control panel are shown in drawing (end of manual). An example of a point-to-point starter-to-UCP connection schematic is shown at the end of the manual.

Note: Install 10 guage conduit between the right back portion when facing the front of the UCP and the starter for the 115-volt circuits; and between the left back portion of the UCP and the starter for the IPC circuit.

When sizing and installing the electrical conductors for these circuits, follow the guidelines listed.

⚠ CAUTION

KEEP INSIDE OF THE STARTER PANEL FREE FROM DEBRIS, failure to do so may cause an electrical short that seriously damages the starter components.

1. If the starter enclosure must be cut to provide electrical access, exercise care to prevent debris from falling inside the enclosure.

2. Use only shielded twisted pair for the IPC circuit between the starter and the UCP on remote mounted starters. Recommended wire is Beldon Type 8760, 18 AWG for runs up to 1000 feet.

Note: The polarity of the IPC wire pair is critical for proper operation.

3. Separate low-voltage (less than 30V) wiring from the 115V wiring by running each in its own conduit.

4. As you route the IPC circuit out of the starter enclosure, make sure that it is at least 6" from all wires carrying a higher voltage.

5. For UCP2 IPC shielded twisted pair wiring, the shield should be grounded on one end only at UCP2. The other end should be unterminated and taped back on the cable sheath to prevent any contact between shield and ground.

Refer to Figure 6 for wiring information on UCP2 Control Panel connections.

⚠ CAUTION

MAINTAIN AT LEAST 6 INCHES BETWEEN LOW-VOLTAGE (<30V) AND 115V CIRCUITS. Failure to do so could result in electrical noise that may distort the signals carried by the low-voltage wiring, including the IPC.

Purge Control Panel to UCP (Field installed purge only)

Install wiring between the purge control panel and the UCP for 115/volt circuits and the IPC circuits. See Figure 7 for wiring field installed purge.

Figure 5
Terminal Stud, Clamp and Lug Assembly

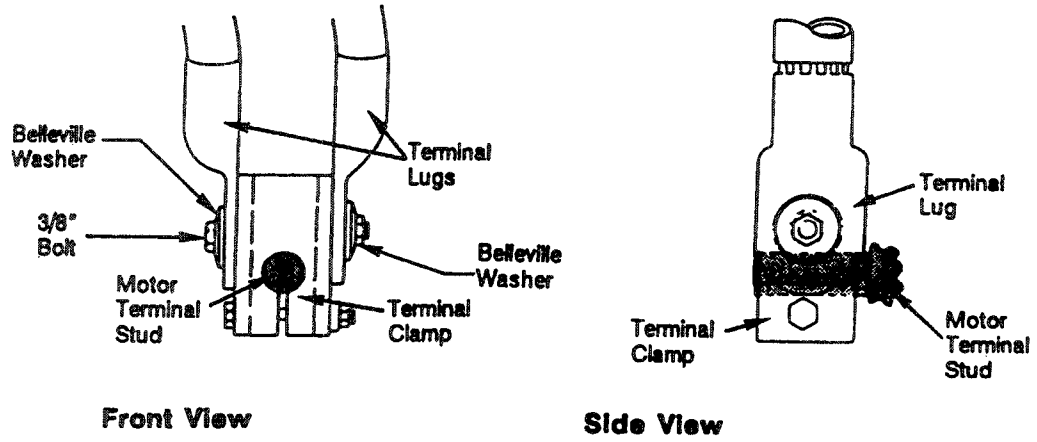

Figure 6
UCP2 Control Panel Connections

Trane supplied Remote Starter Connections

1TB1		2TB1
1	IF---115 VAC (H) ---	1
2	2C --- 115 VAC (N) ---	2
5	3D --- Run Relay ---	6
9	DC --- Start Relay ---	4
7	8C --- Oil Pump Interlock ---	8
8	9C --- Oil Pump Interlock ---	9

Note: See Manufacturer's Drawings for Starters by Others.

Trane supplied Adjustable Frequency Drive Connections

1TB1		2TB1
1	IF---115 VAC (H) ---	1
2	2C --- 115 VAC (N) ---	2
5	3D --- Run Relay ---	6
9	---- Start Relay ---	4
7	---- Oil Pump Interlock ---	7
8	---- Oil Pump Interlock ---	9

Figure 7
Field Installed Purge

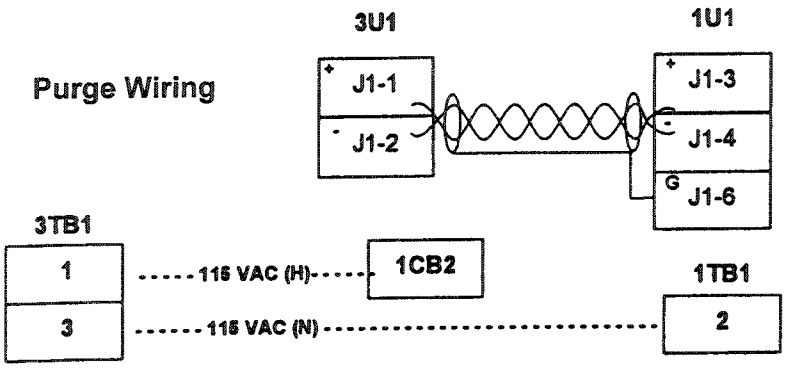

Note: The polarity of the IPC wire pair is critical for proper operation.

UCP Electrical Specifications

Following is a list of constraints for the UCP2 in the control panel:

Note that the control panel is designed to receive input from the secondary of a power transformer in the starter panel.

1. **Nominal Voltage:** 115 VAC, with operating range of 98 to 132 VAC, inclusive.

2. **Maximum VA:** 4K VA (20-amp fuse) for units with the refrigerant pump

3. Power input wiring must be at least 6" from low-voltage, less than 30V wiring.

4. All signal inputs are low-voltage, less than 30V.

5. **UCP Storage Range:** -40 to 158F (-40C to 70C) i.e. not applicable for chiller.

Control Circuit Wiring

Interlock Circuits

Chilled Water Flow. Wire the evaporator water pump contactor (5K1) to a separate 120 volt single phase power supply with 14 AWG, 600 volt copper wire, then connect this circuit to 1U1-J12-1 and 2. This will allow the UCP to control the evaporator water pump, or wire the 5K1 contactor to operate remotely and independently of the UCP.

Wire the auxiliary contacts of the evaporator water pump contactor (5K1) in series with the flow switch (5S1) installed in the evaporator supply pipe. Use 14 AWG, 600-volt copper wire.

Connect this circuit to UCP terminals 1TB1-10 and 12.

When installed properly, the chilled water interlock circuit will only allow compressor operation if the evaporator pump is running and providing at least the minimum water flow required.

Condenser Water Flow. Wire the condenser water pump contactor (5K2) to a separate 120-volt, single-phase power supply with 14 AWG, 600-volt copper wire; then connect this circuit to UCP terminals 1U1-J14-1 and 2.

Next, use 14 AWG, 600-volt copper wire to connect the auxiliary contacts of the condenser water pump contactor (5K2) in series with the flow switch (5S2) installed in the condenser supply pipe.

Connect this circuit to UCP terminals 1TB-11 and -13.

When installed properly, the condenser water lock circuit will only allow the compressor to operate if the condenser pump is running and providing at least the minimum water flow required.

Temperature Sensor Circuits

1. All temperature sensors are factory installed except the optional outdoor air temperature sensor. Mount this sensor in the fresh air intake, or on a wall of the building out of direct sunlight.

2. If the leads on the sensor do not reach all the way back to the UCP:

   a. Route the sensor leads to a junction box mounted in a convenient location.

   b. Splice the leads to 14-18 AWG, 600 V wire of sufficient length inside the junction box.

   c. Route the added length of wire to the UCP in conduit (unless it is shielded).

3. Attach the outdoor air temperature sensor wires at 1U1-J5-5 and -6.

Note: If shielded cable is used to extend the sensor leads, be sure to tape off the shield wire at the junction box and ground it at the UCP. If the added length is run in conduit, do not run them in the same conduit with other circuits carrying 30 or more volts.

⚠ CAUTION
DO NOT ROUTE LOW-VOLTAGE SENSOR LEADS WITH OTHER CONDUCTORS CARRYING 30 OR MORE VOLTS. Failure to do so can result in sensor malfunction due to electrical noise.

4. All of the water temperature sensors used in the UCP control system are accurate to within ± 1.0°F, and are "matched" pairs.

The term "matched sensor pair" indicates that both sensors in a given pair, have the same accuracy. For example, a sensor that registers a temperature that is 0.5°F higher than the "actual" value is paired with another sensor that also registers 0.5 high.

If entering and leaving water temperature sensors are not "matched", the accuracy of the temperature readings displayed on the face of the UCP is reduced.

Optional Relay Circuits

Optional Control/Output Circuits: Install various optional wiring as required by the owner's specifications.

Optional Tracer Communication Interface

This control options allows the UCP to exchange information such as chiller status and operating set points with a Tracer system.

Figure 8 illustrates how such a communication/control network might appear.

Note: The circuit must be run in separate conduit to prevent electrical noise interference.

Additional information about the TCI option is published in the installation manual and operator's guide that ships with the Tracer.

Figure 8
Illustrates Communication/Control Network to Chiller Units with UCP2

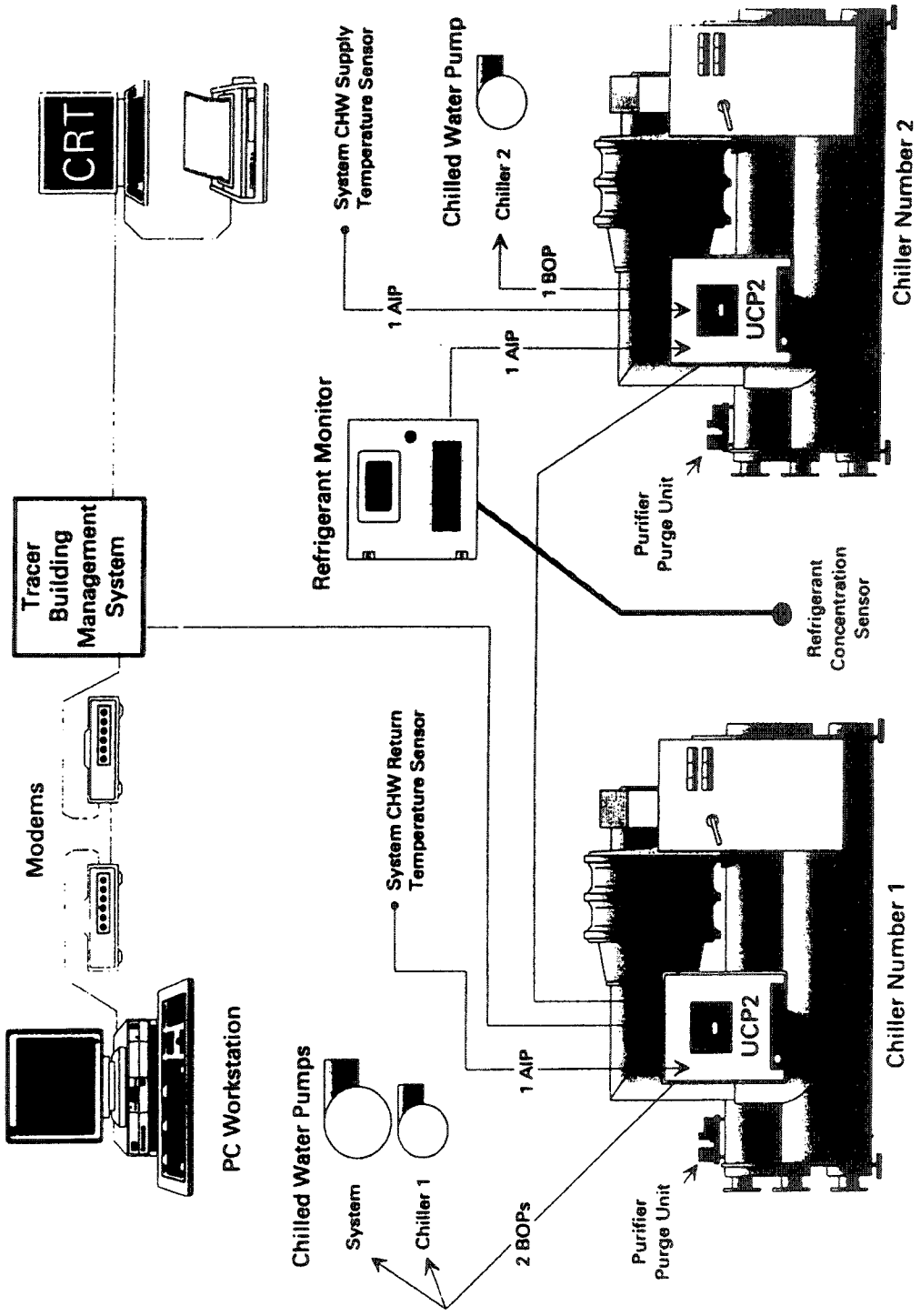

Unit Start-Up

All phases of initial unit start-up must be conducted under the supervision of a qualified local service engineer. This includes pressure testing, evacuation, electrical checks, refrigerant charging, actual start-up and operator instruction.

Advance notification is required to assure that initial start-up is scheduled as close to the requested date as possible.

Forms Information

Samples of start-up and operating forms such as 1-27.08-6 and 1-27.90-5 along with other helpful forms are found in the CVHE-OM-8C or latest revision which can be obtained from the nearest Trane office.

It is recommended that the serviceman contact the local Trane office to obtain the most recent revision of a form. The forms in the operation and maintenance manual are only current at the date of printing of the manual.

After obtaining the most recent form, complete all the information and forward it to your local Trane Company.

Wiring Addendum

Type of Drawing	Drawing Number	Page Number
2307-5201-A	UCP2 Remote Across the Line Starter	16
2307-5202-A	UCP2 Remote Primary Reactor Starter	17
2307-5203-A	UCP2 Remote Auto Transformer Starter	18
2307-5204-A	UCP2 Remote Wye-Delta Starter	19
2307-5205-B	UCP2 Remote Adaptive Frequency Drive	20
2307-5206-B	UCP2 Customer Supplied Across the Line Starter	21
2307-5207-A	UCP2 Remote Mounted Solid State Starter	22
2307-5208-A	UCP2 Unit Mounted Solid State Starter	23
2307-5209-B	UCP2 Unit Mounted Wye-Delta Starter	24
2307-5210-B	UCP2 Customer Supplied Solid State Starter	25
2307-5211-B	UCP2 Customer Supplied Remote Mounted, Wye-Delta Starter, Primary Reactor or Auto Transformer Starter	26
2307-5212-A	UCP2 Purge Module	28 - 29
2307-5213-D	UCP2 Extended Capacity	30 - 31
2307-5214-C	UCP2 Chiller and Communications Modules	32 - 33
2307-5215-A	UCP2 Options, I.O. Module and Refrigerant Module	34 - 35
2307-5239A	UCP2 Connection Diagram w/Dual Actuators	36
2307-5239-B	UCP2 Connection Diagram w/Dual Actuators 1470, 1720	37

Important Note:
Always refer to the submittals and drawings that actually ship with the unit.

Wiring Drawing

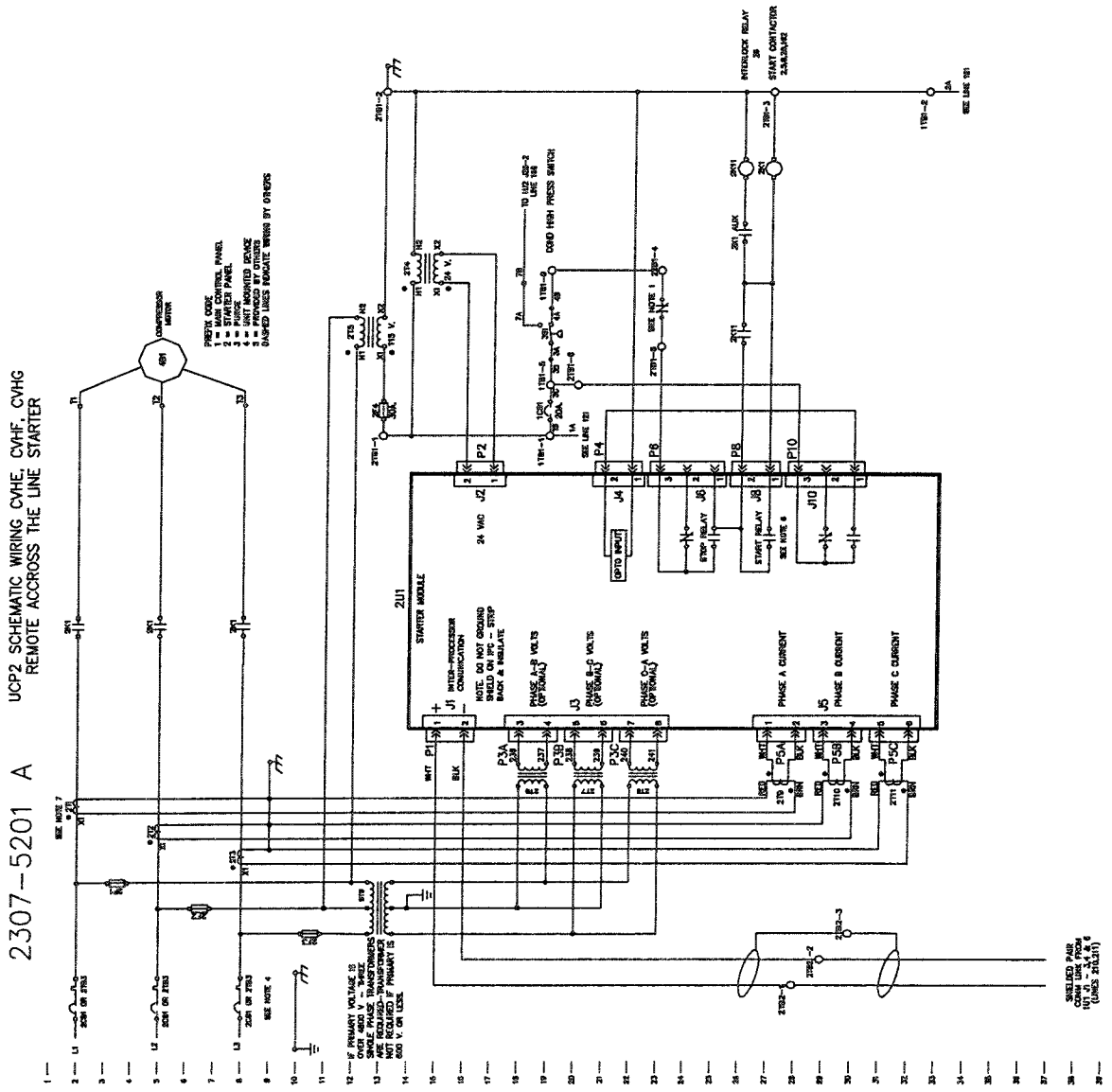

Wiring Drawing

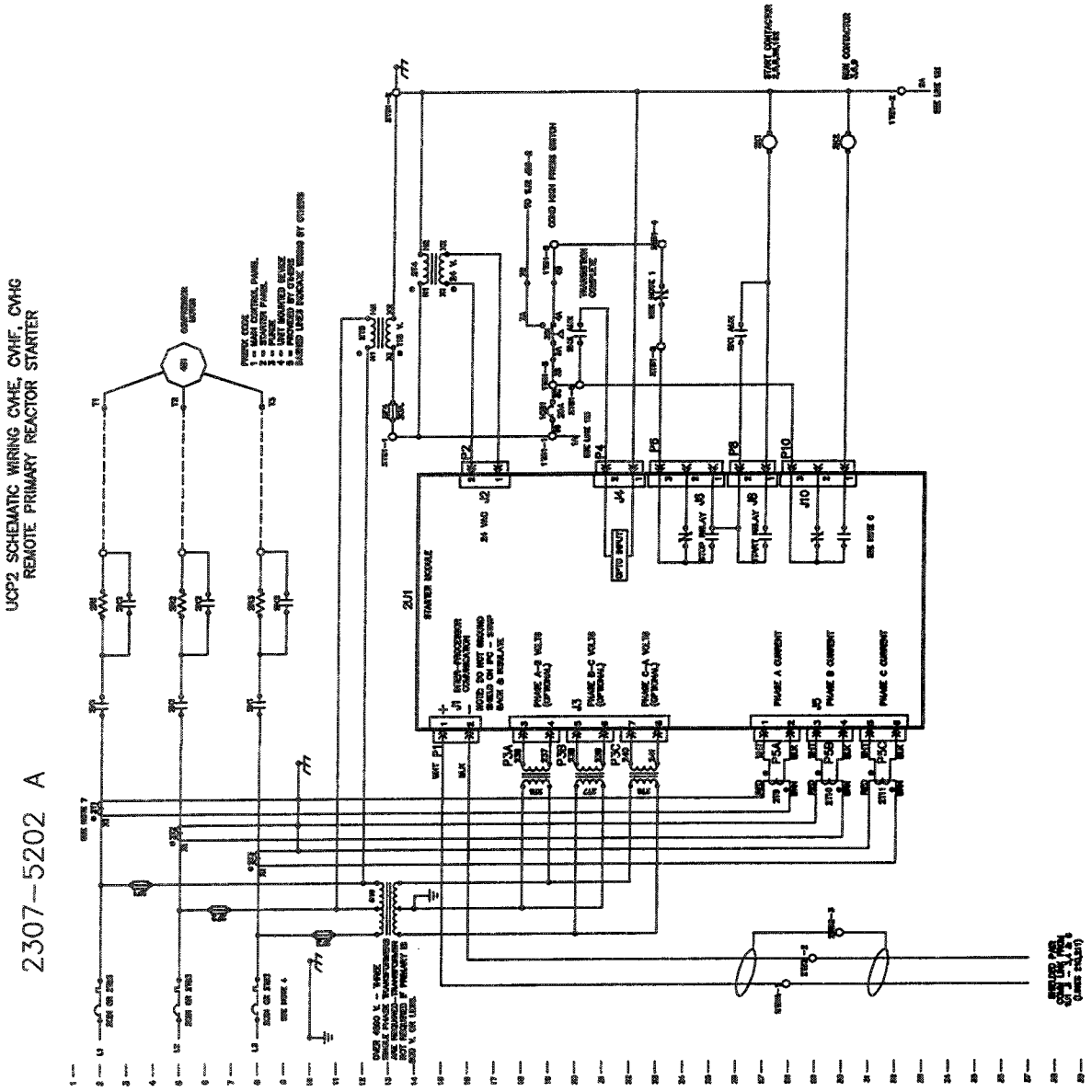

Wiring Drawing

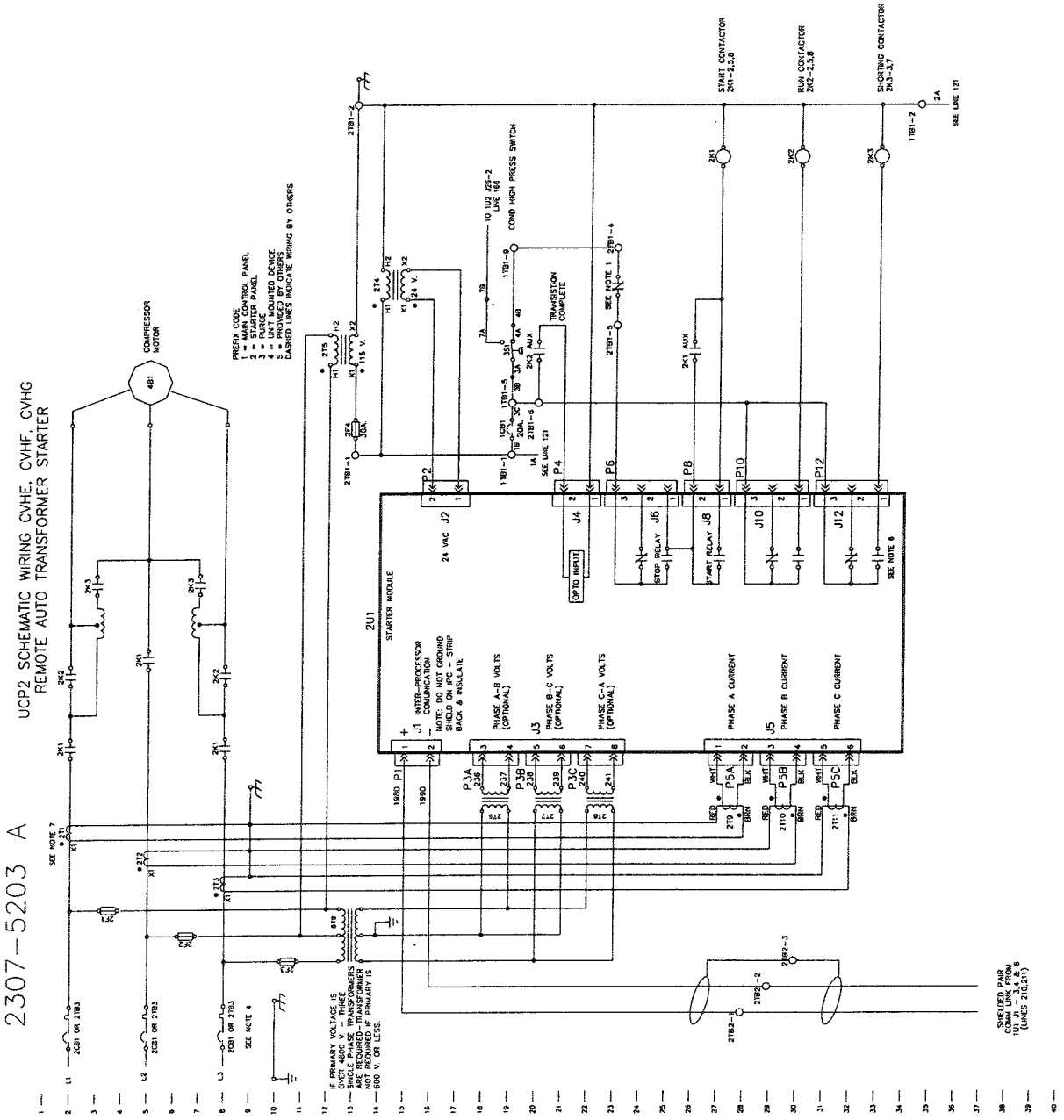

Wiring Drawing

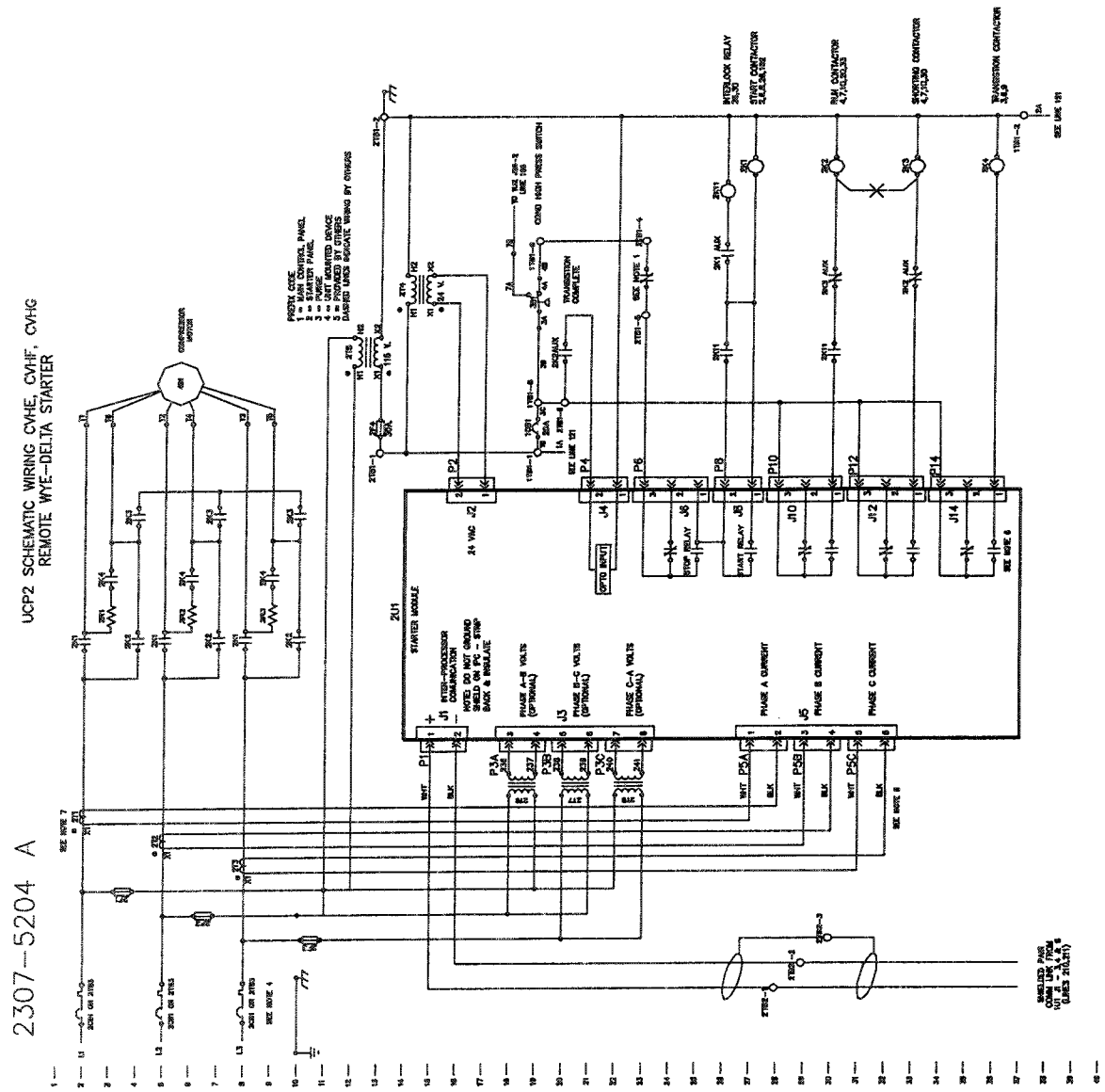

Wiring Drawing

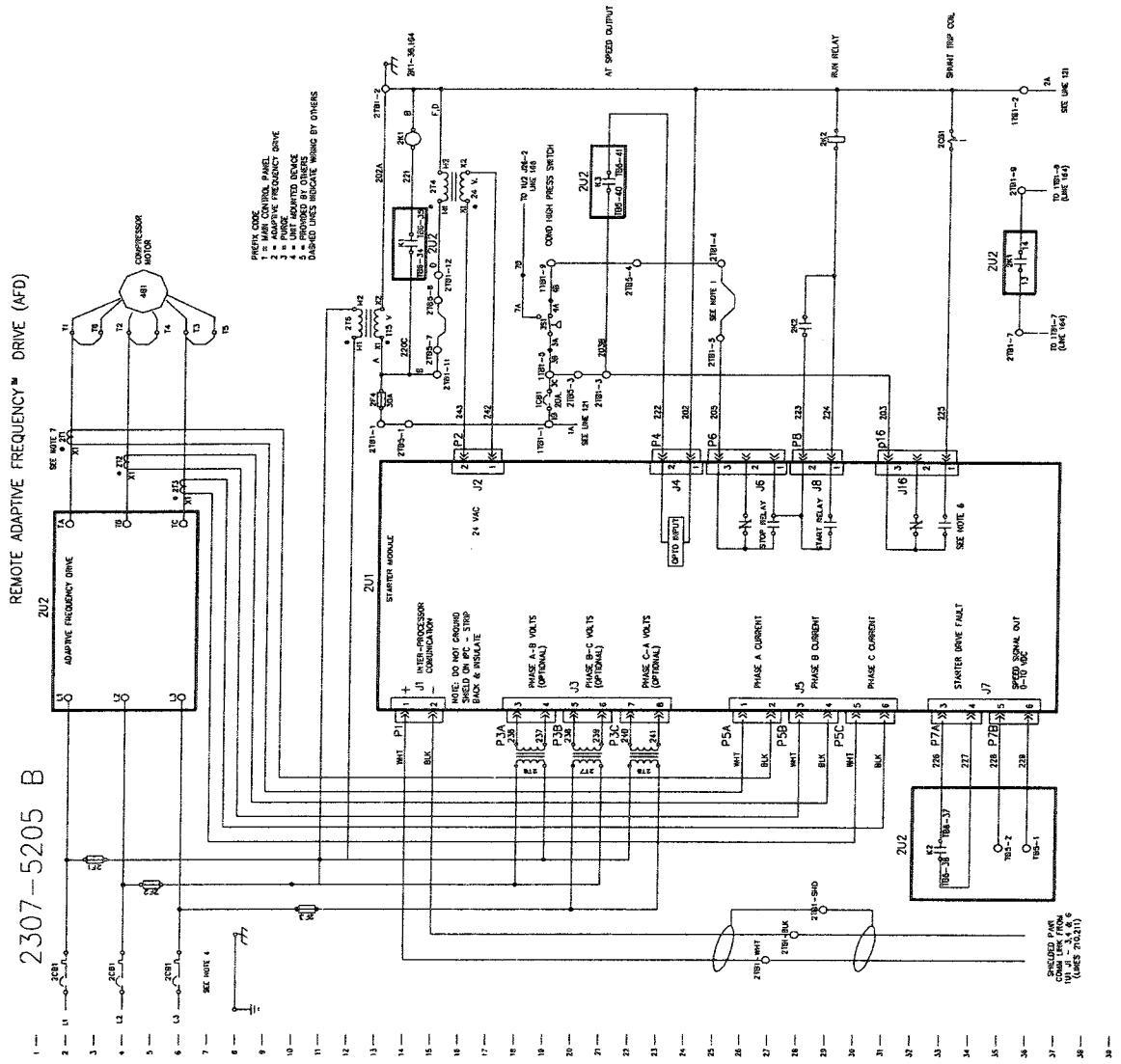

Wiring Drawing

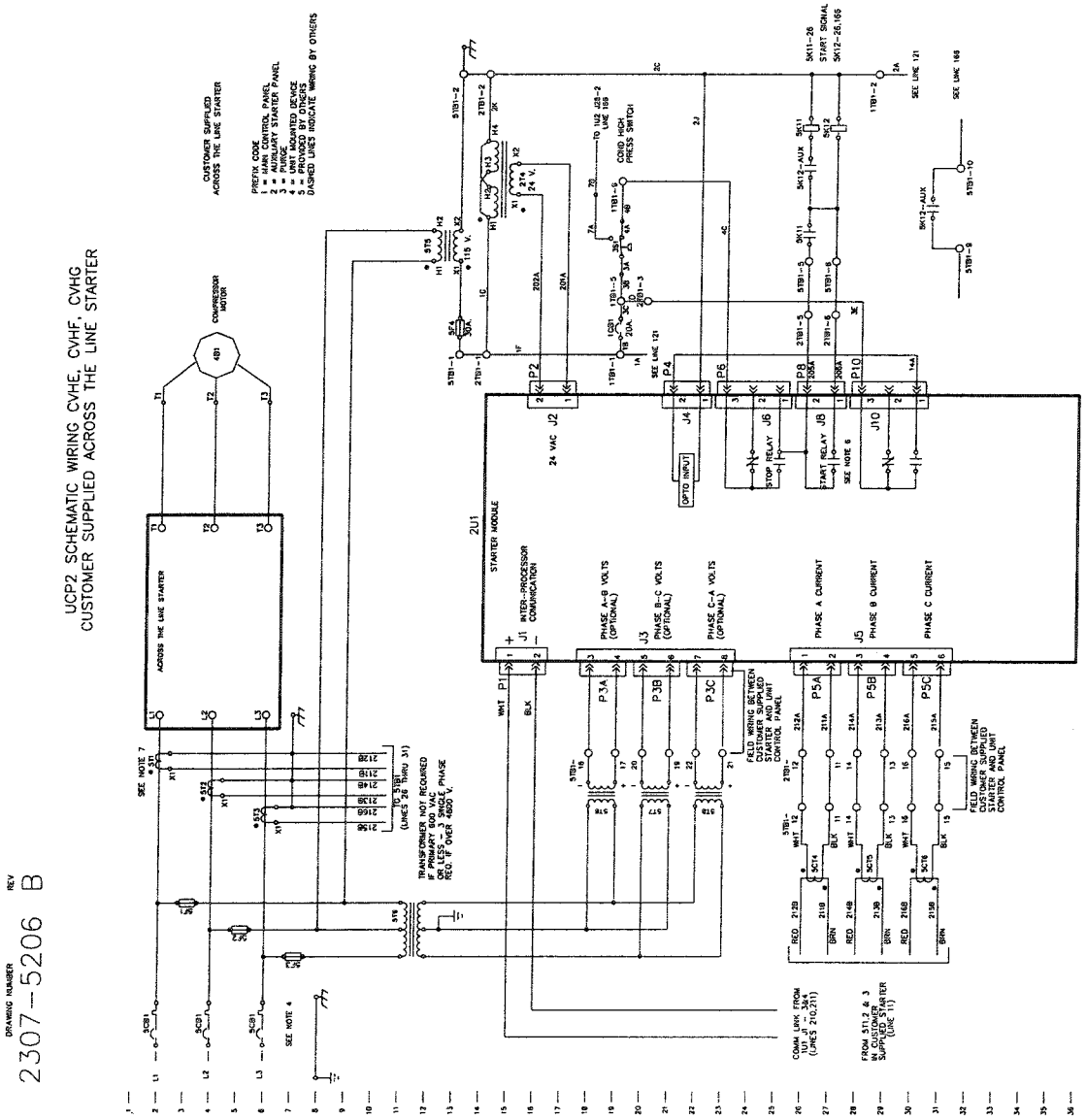

Wiring Drawing

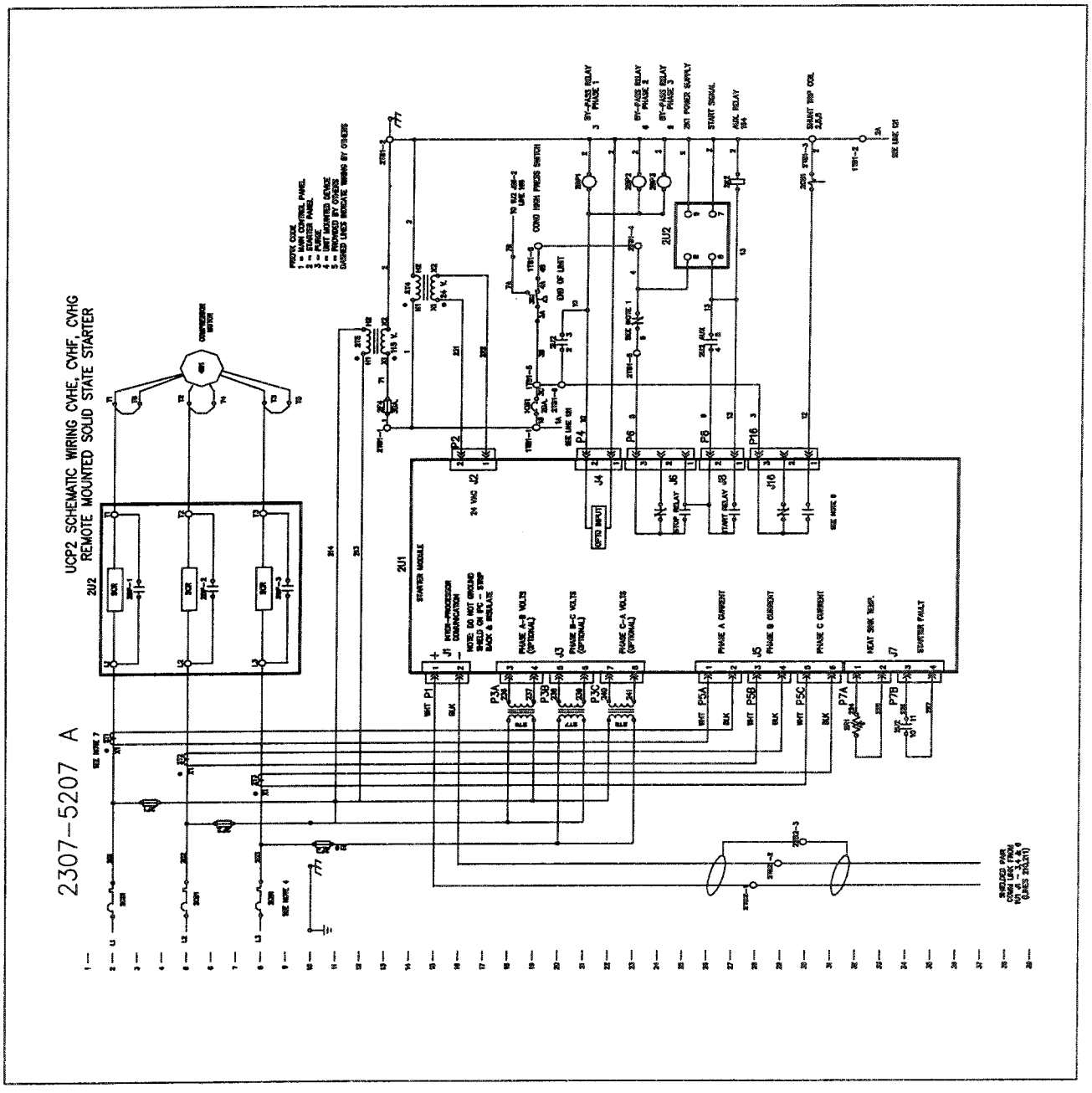

Wiring Drawing

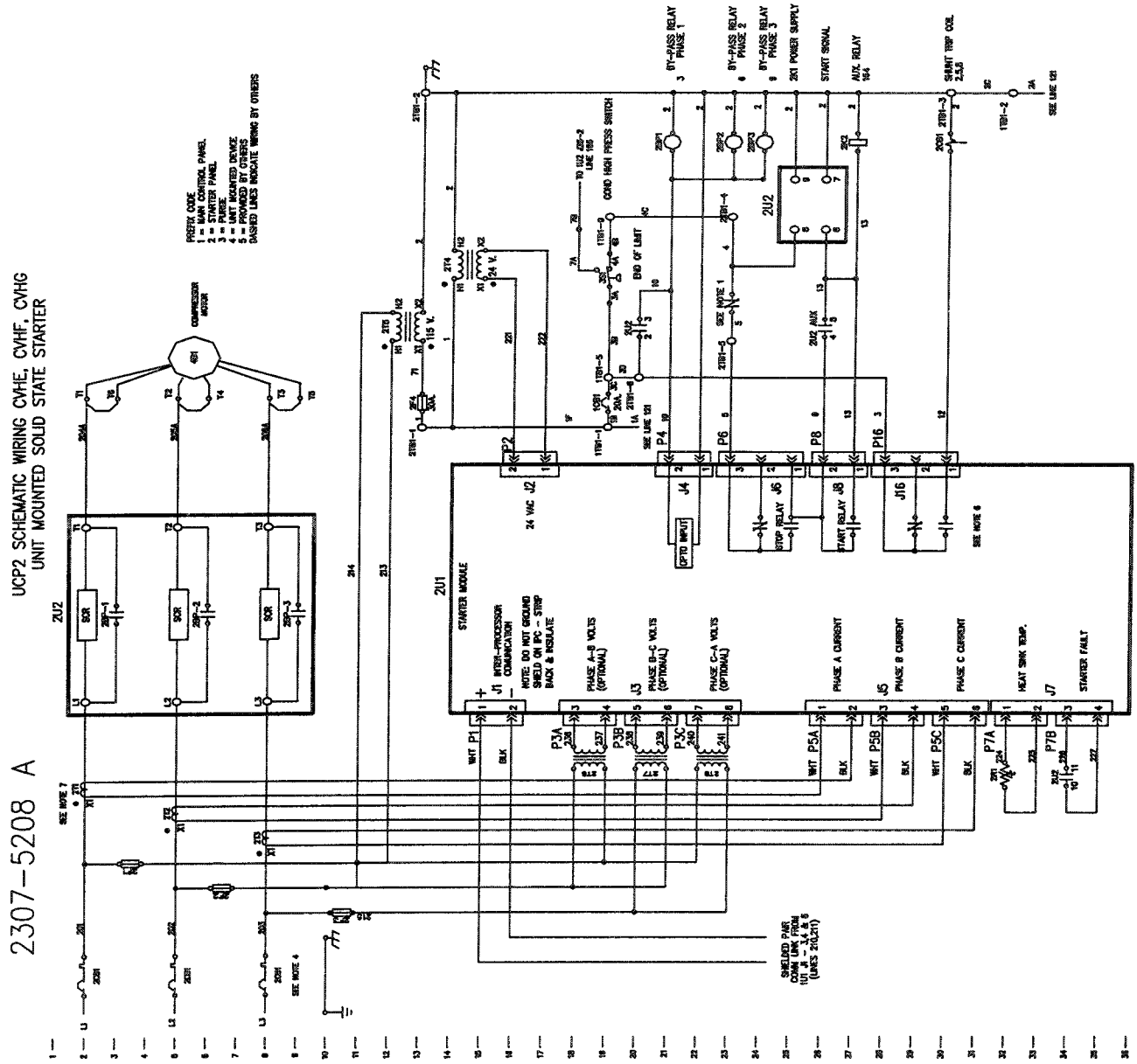

Wiring Drawing

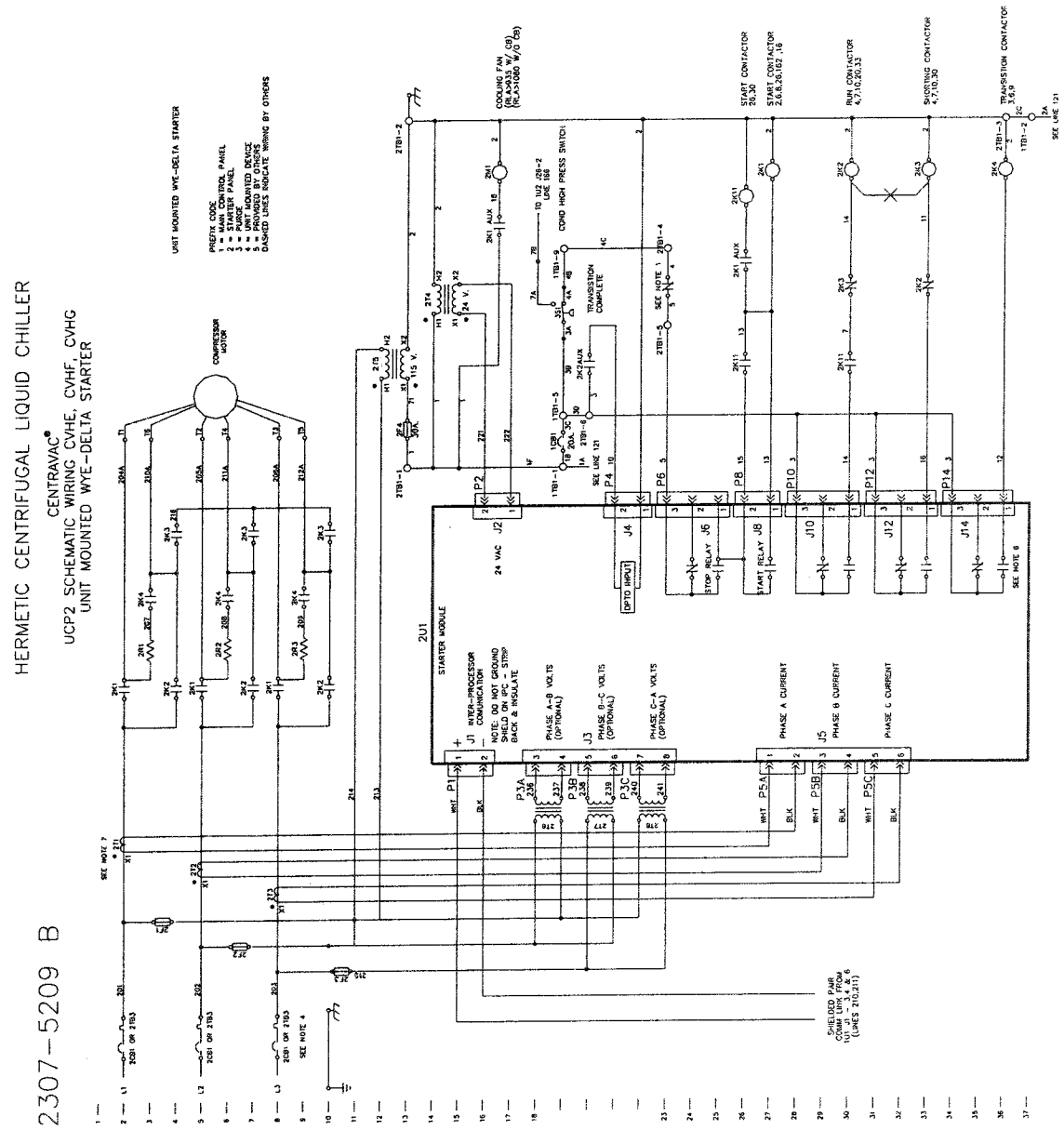

Wiring Drawing

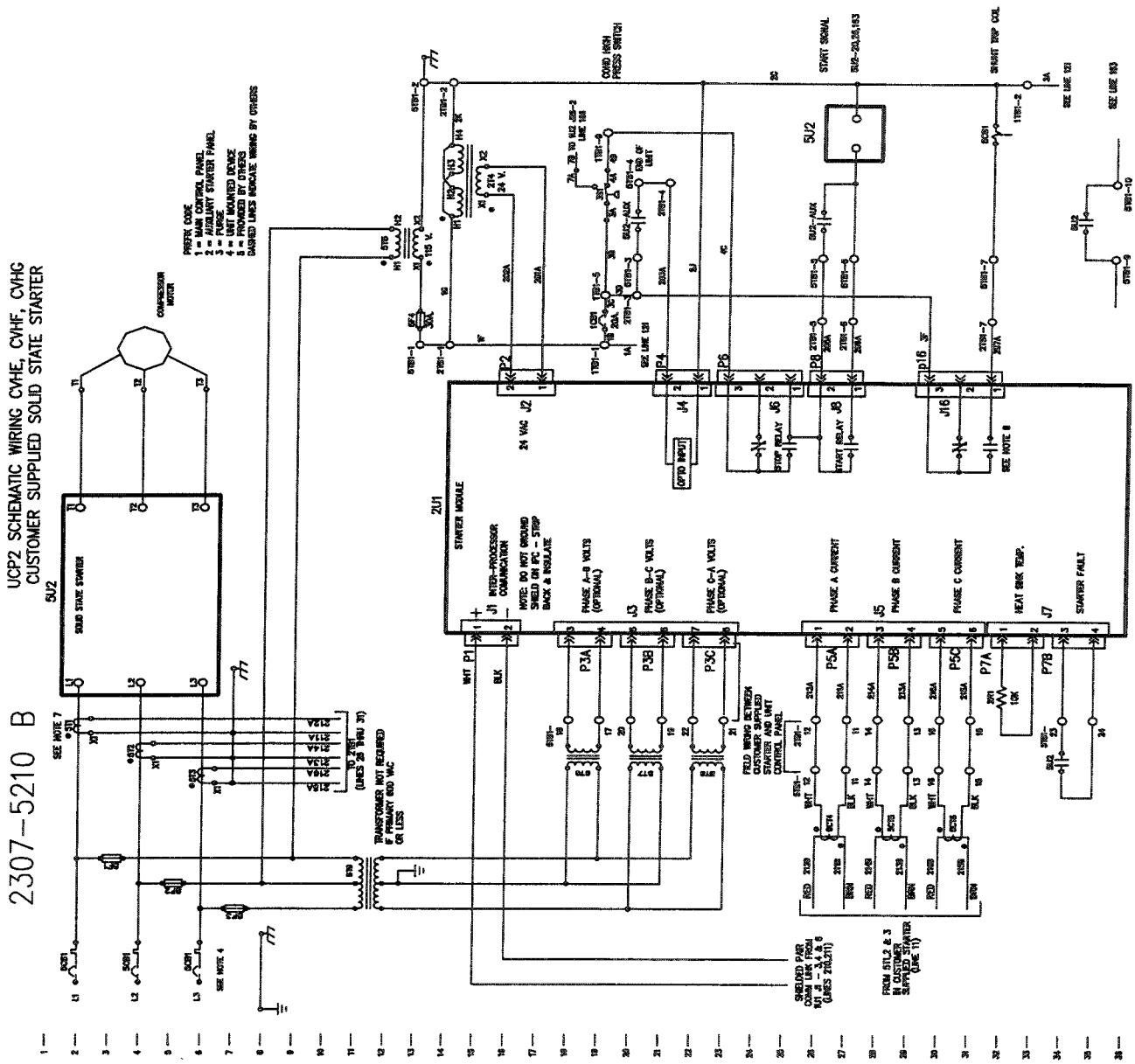

Wiring Drawing

2307-5211B for UCP2 Customer Supplied Remote Mounted , Wye-Delta, Primary Reactor or Auto Transformer Starter

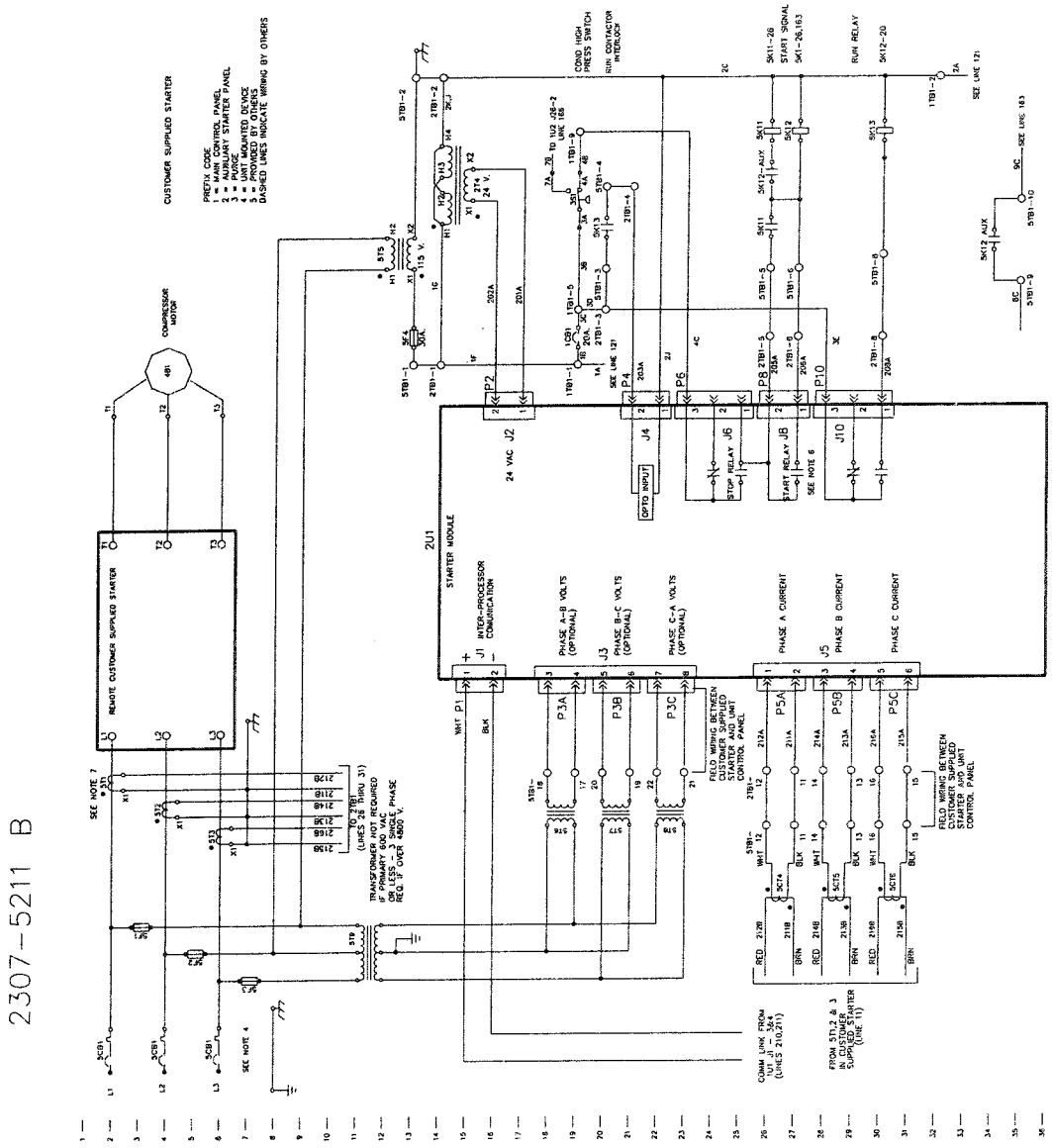

Wiring Drawing

Refer to Figure 9 below which shows an example of a typical sequence of operation for a Unit Mounted Wye-Delta Starter.

In the starter drawings, shown in this manual, all starter variables are the same in the Sequence of Operation except the *Maximum Acceleration Time*.

Below is a table which shows variables of the *Maximum Acceleration Time* for all starter drawings in this manual.

Figure 9 - Example of a Typical Sequence of Operation for a Unit-Mounted Wye-Delta Starter

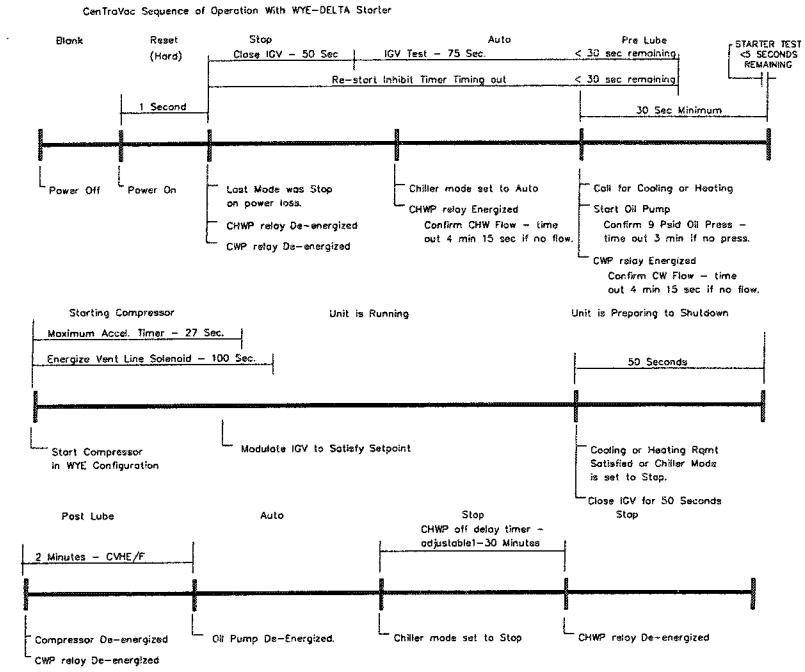

NOTES:
1. OPTIONAL STARTER INTERLOCK. SEE STARTER MANUFACTURES WIRING DIAGRAM FOR SPECIFIC APPLICATION.
2. UNLESS OTHERWISE NOTED,ALL SWITCHES ARE SHOWN AT 25 C (77 F), AT ATMOSPHERIC PRESSURE, AT 50% RELITIVE HUMIDTY, WITH ALL UTILITIES TURNED OFF AND AFTER A NORMAL SHUTDOWN HAS OCCURED.
3. NUMBERS ALONG THE RIGHT SIDE OF THE SCHEMATIC DESIGNATE THE LOCATION OF THE CONTACTS BY LINE NUMBER. AN UNDERLINED NUMBER INDICATES A NORMALLY CLOSED CONTACT.
4. THREE PHASE POWER SUPPLY VOLTAGE-SEE UNIT NAMEPLATE
5. UNIT MOUNTED WYE-DELTA STARTER WIRING BETWEEN STARTER AND CONTROL MODULE ARE SHOWN. SEE STARTER MANUFACTURES WIRING DIAGRAM FOR SPECIFIC STARTER WIRING.
6. RELAY COILS ARE NOT SHOWN. CONTACTS ARE CONTROLLED BY THE LOGIC OF THE MICRO-CONTROLLER. SEE SEQUENCE OF OPERATION.
7. POLARITY MARKING ON THE CURRENT TRANSFORMER , (H1 MARKING ON CT) MUST BE FACING TOWARDS THE INCOMING CURRENT.

⚠ WARNING
HAZARDOUS VOLTAGE!
DISCONNECT ALL ELECTRIC POWER INCLUDING REMOTE DISCONNECTS BEFORE SERVICING.
FAILURE TO DISCONNECT POWER BEFORE SERVICING CAN CAUSE SEVERE PERSONAL INJURY OR DEATH.

⚠ AVERTISSEMENT
VOLTAGE HASARDEUX!
DECONNECTEZ TOUTES LES SOURCES ELECTRIQUES INCLUANT LES DISJONCTEURS SITUES A DISTANCE AVANT D'EFFECTUER L'ENTRETIEN.
FAUTE DE DECONNECTER LA SOURCE ELECTRIQUE AVANT D'EFFECTUER L'ENTRETIEN PEUT ENTRAINER DES BLESSURES CORPORELLES SEVERES OU LA MORT.

⚠ CAUTION
USE COPPER CONDUCTORS ONLY!
UNIT TERMINALS ARE NOT DESIGNED TO ACCEPT OTHER TYPES OF CONDUCTORS.
FAILURE TO DO SO MAY CAUSE DAMAGE TO THE EQUIPMENT.

Table 3 - Maximum Accel. Time

Sequence of Operation for UCP2 CVHE, CVHF, CVHG Starters Maximum Accel. Time		
Starter Drawing Number	**Type of Starter**	Maximum Accel Time
2307-5201 A	Remote Accross the Line	6 Seconds
2307-5202 A	Remote Primary Reactor	11 Seconds
2307-5203 A	Remote and Auto Transformer	11 Seconds
2307-5204 A	Remote Wye Delta	27 Seconds
2307-5205 B	Remote Adaptive Frequency Drive	12 Seconds
2307-5206 B	Customer Supplied Across the Line	6 Seconds
2307-5207 A	Remote Mounted Solid State	15 Seconds
2307-5208 A	Unit Mounted Solid State	15 Seconds
2307-5209 B	Unit Mounted Wye-Delta	27 Seconds
2307-5210 B	Customer Supplied Solid State	20 Seconds
2307-5211 B	Customer Supplied Remote Mounted, Wye-Delta, Primary Reactor or Auto Transformer	11 Seconds **27 Seconds if Wye-Delta*

Wiring Drawing

2307-5212A - UCP2 Schematic Wiring CVHE, CVHF, CVHG Purge Module

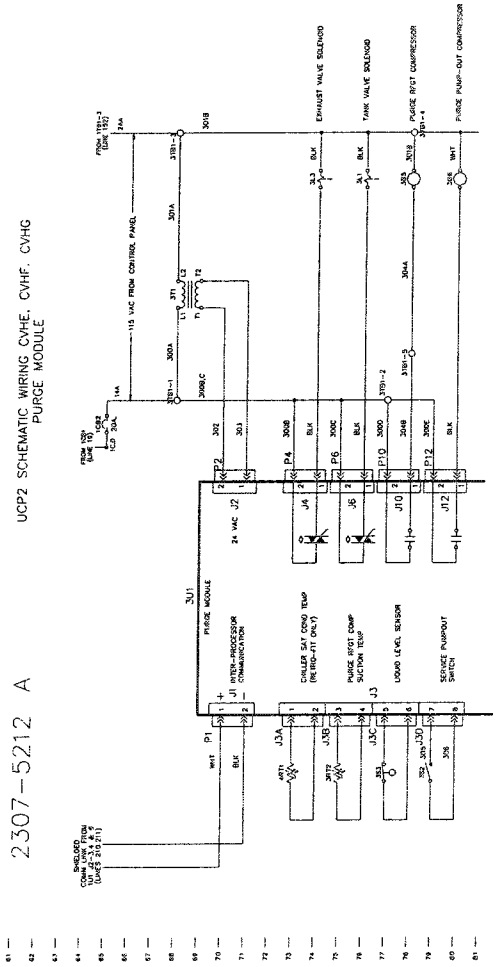

Wiring Drawing

2307-5212A - UCP2 Schematic Wiring CVHE, CVHF, CVHG Purge Module

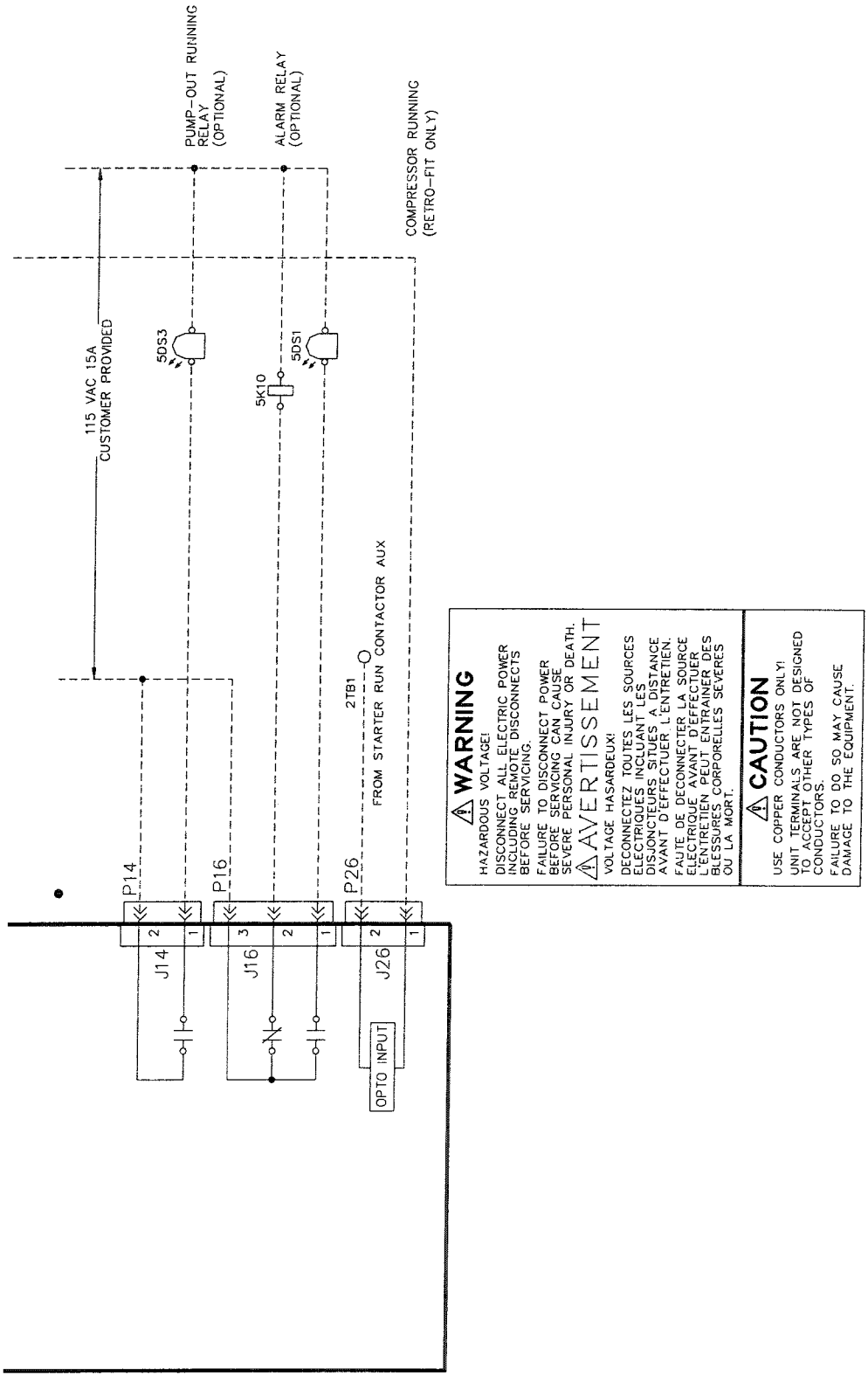

Wiring Drawing

2307-5213D - Schematic, Wiring CVHE, CVHF, CVHG Human Interface, Stepper and Circuit Modules

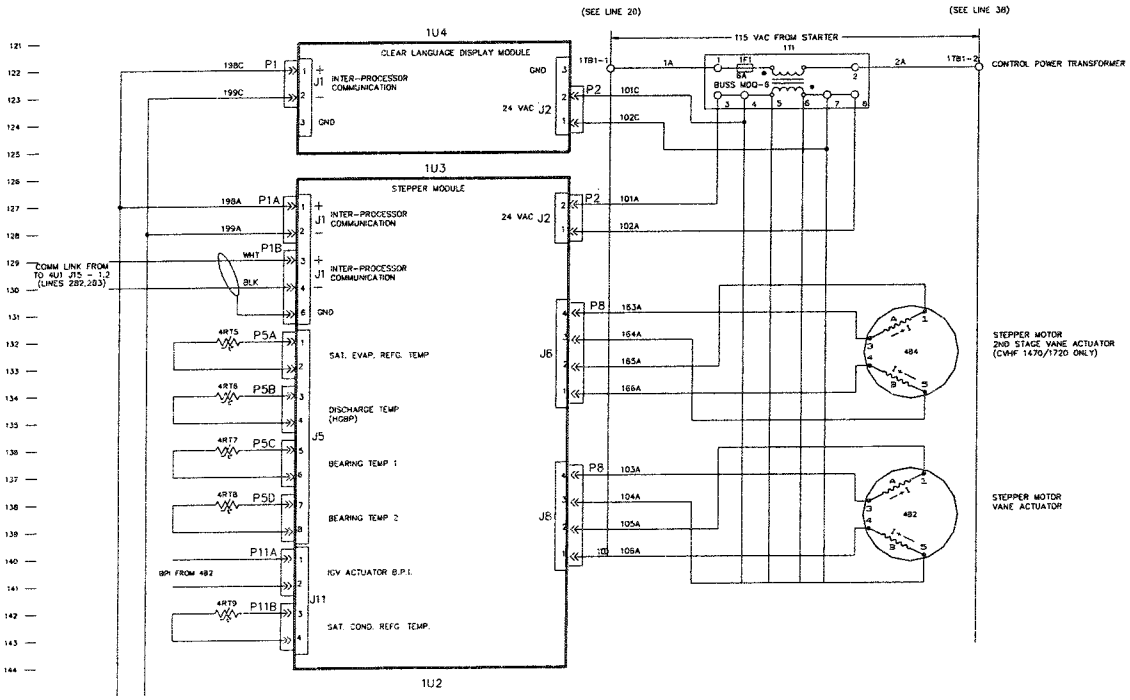

2307-5213D - Continued

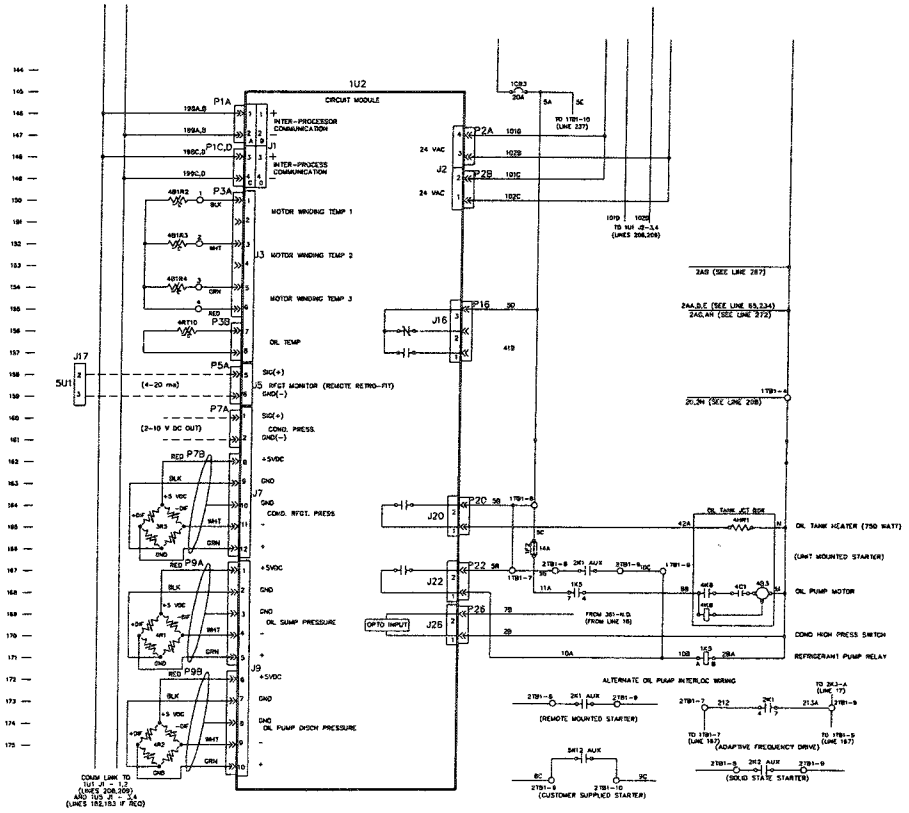

Wiring Drawing

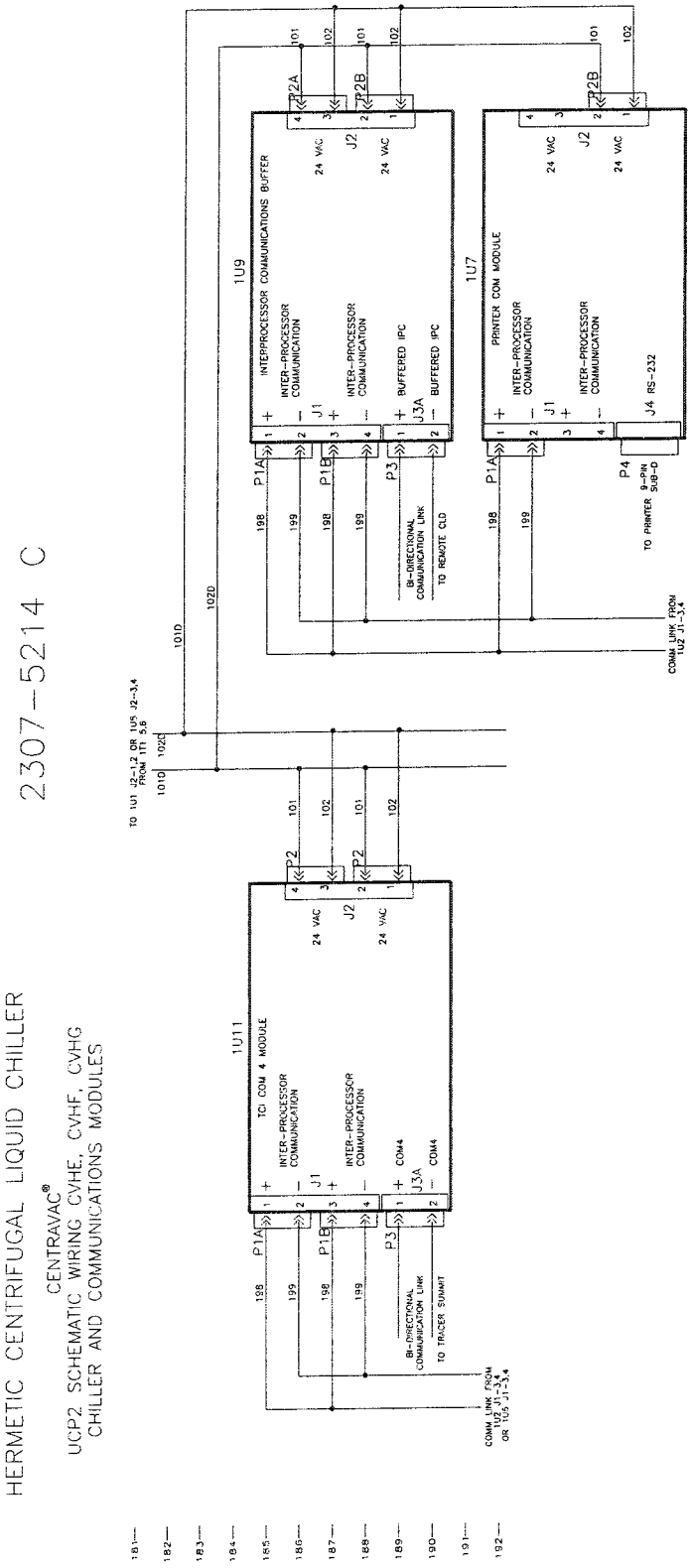

Wiring Drawing

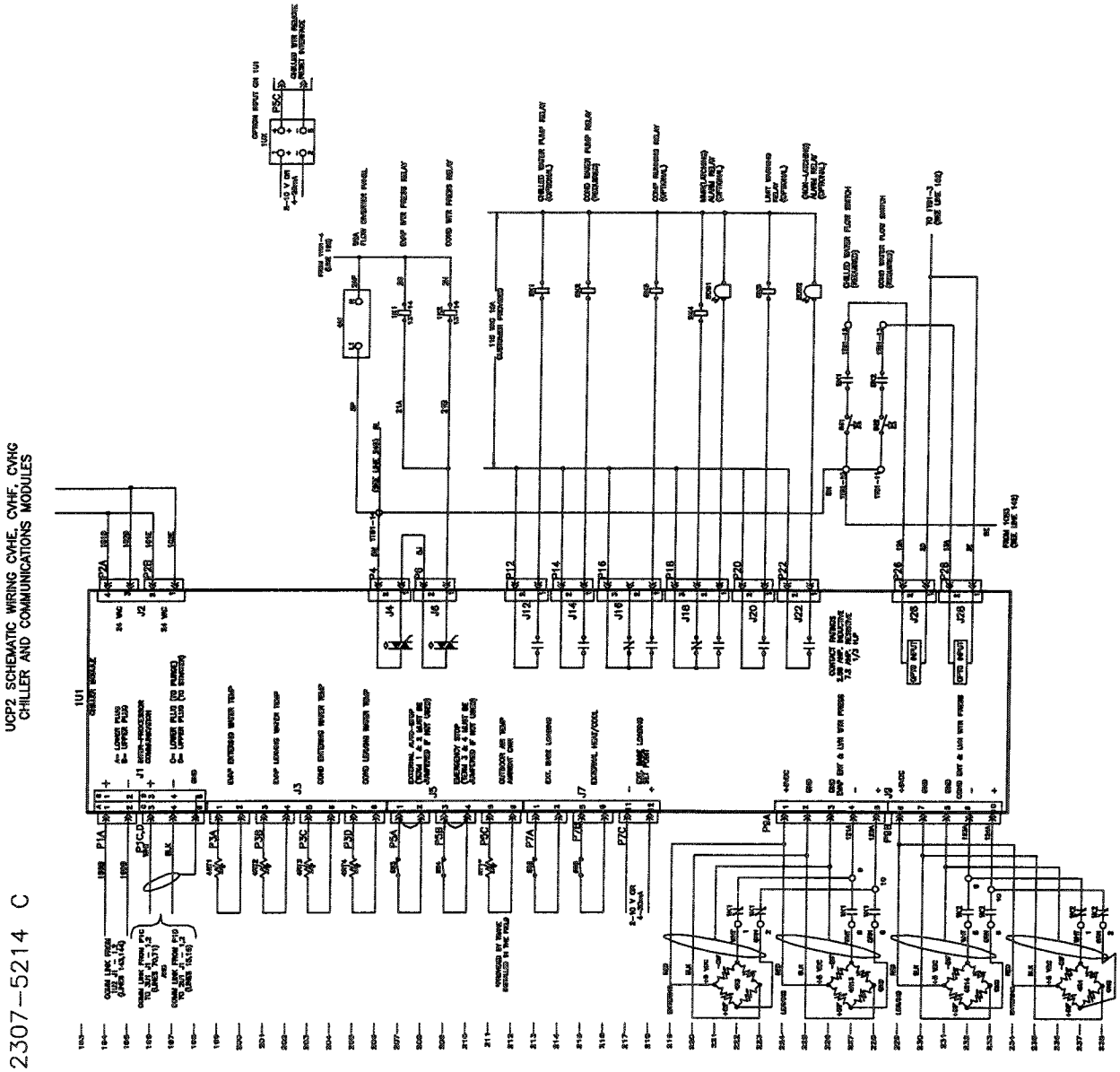

Wiring Drawing

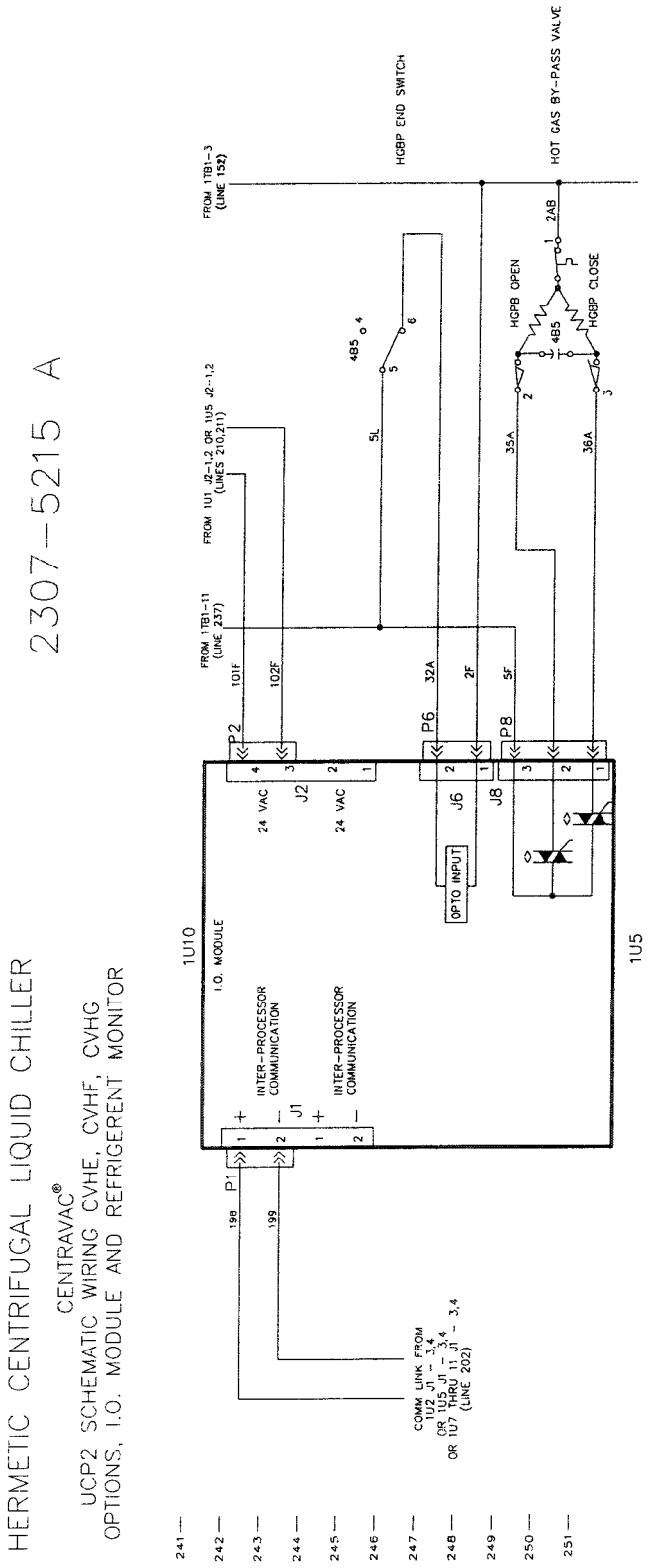

Wiring Drawing

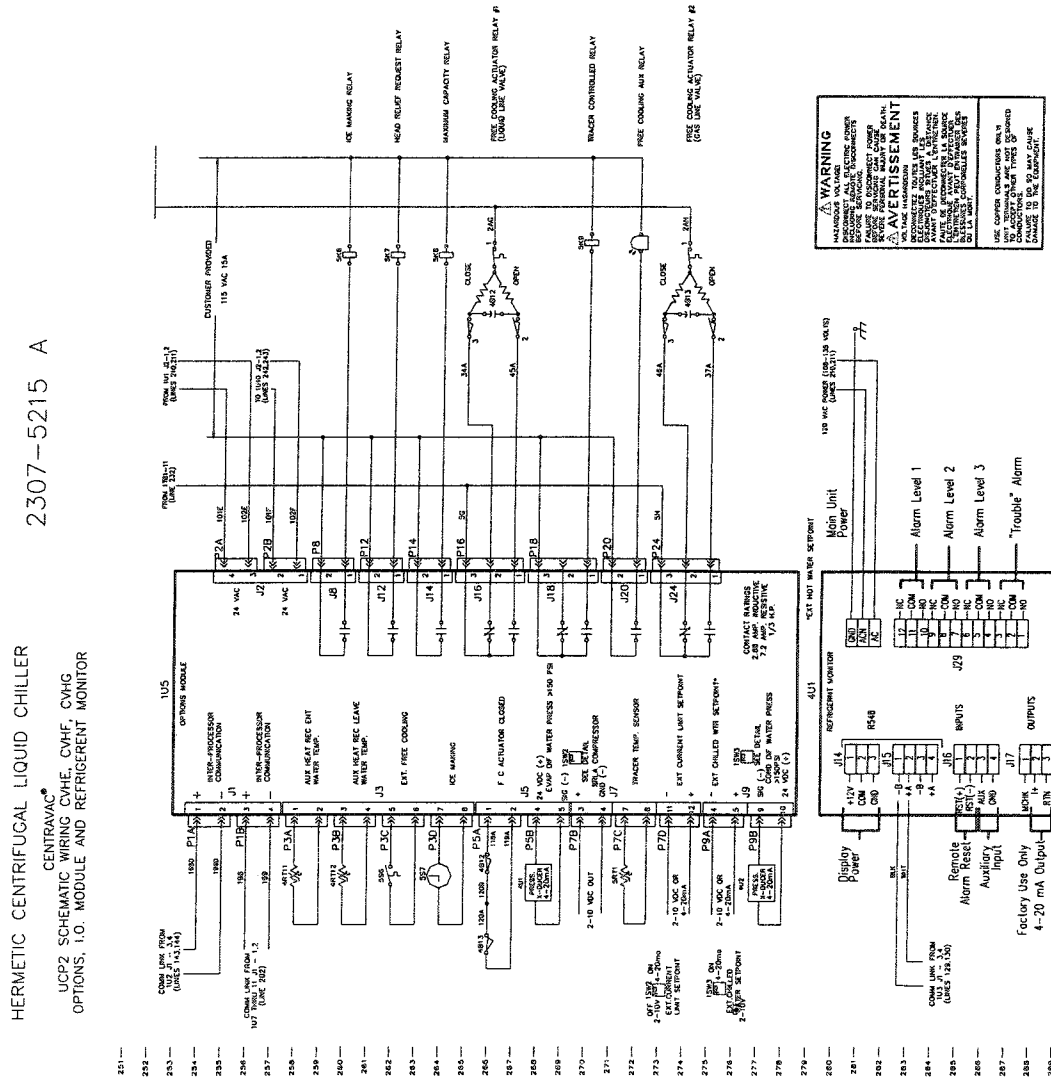

Wiring Drawing

2307-5239A - Connection Diagram w/Dual Actuators 1470, 1720

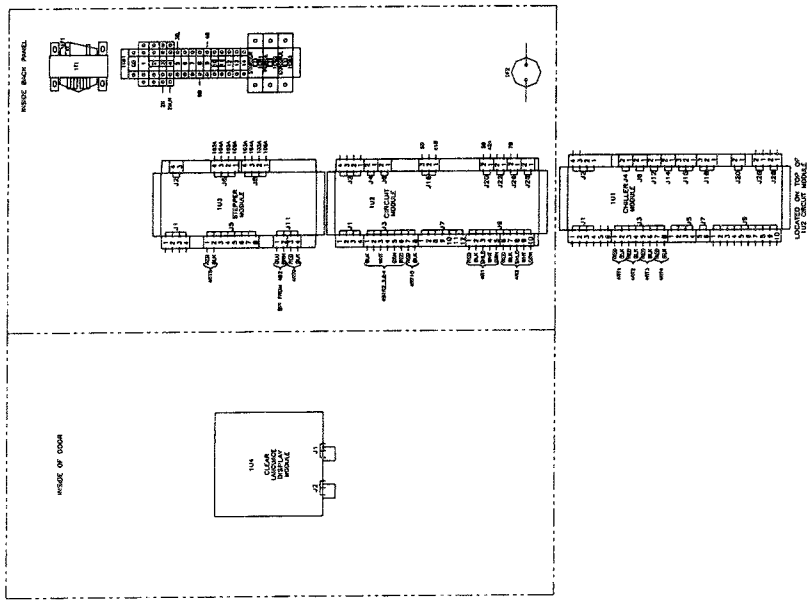

Wiring Drawing

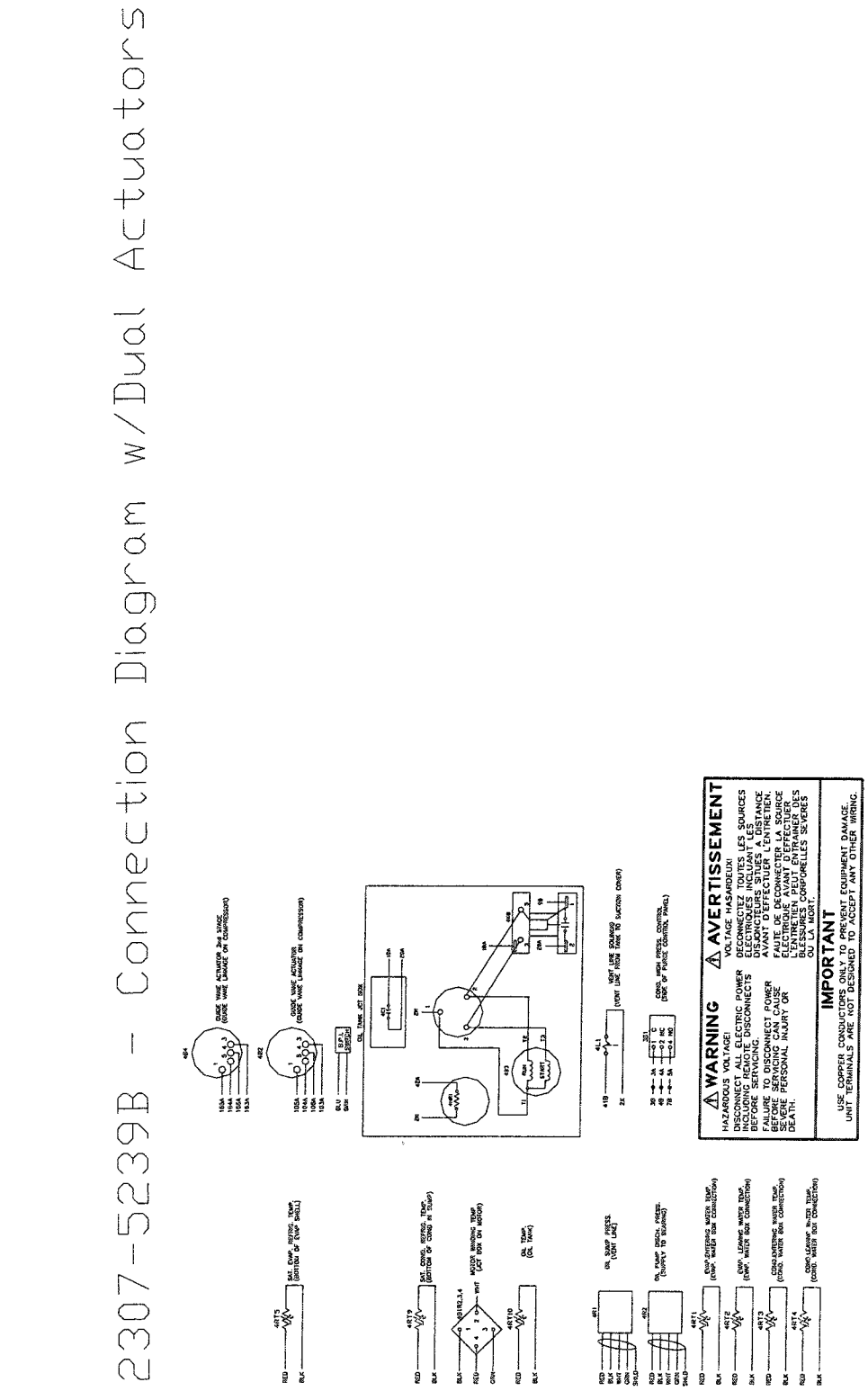

TRANE®

Installation – General Information

Water Cooled CenTraVac™ With CH530

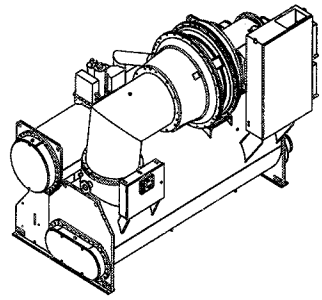
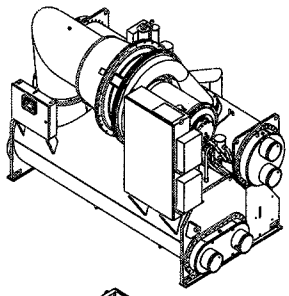
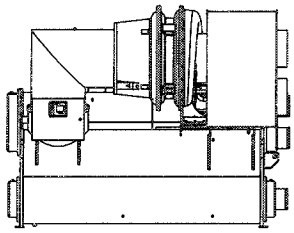
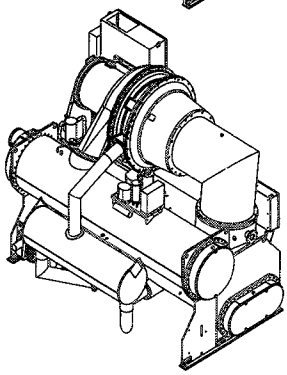
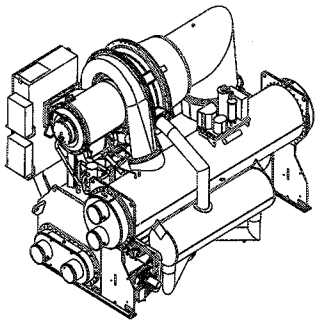
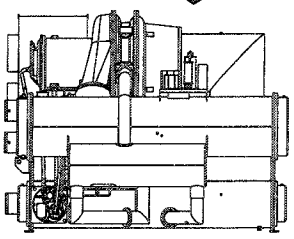

Required Installation Information:
CVHE-SVN01A-EN – General Information
CVHE-SVN02A-EN – Piping Information
CVHE-SVN03A-EN – Electrical Information

X39640645010

CVHE-SVN01A-EN

Warnings and Cautions

Notice:

Warnings and Cautions appear at appropriate locations throughout this manual. Read these carefully.

⚠ WARNING

Indicates a potentially hazardous situation which, if not avoided, could result in death or serious injury.

⚠ CAUTION

Indicates a potentially hazardous situation which, if not avoided, may result in minor or moderate injury. It may also be used to alert against unsafe practices and where property-damage-only accidents could occur.

© 2001 American Standard Inc. All rights reserved.

Contents

General Information

Warnings and Cautions	2
Literature Change History	5
About This Manual	5
Product Description Block	5
Commonly Used Acronyms	5
Unit Nameplate	5
Metric Conversion	5
Responsibilities of Installing Contractor(s)	6
Unit Shipment	8
Storage	8
Recommended Unit Clearances	8
Operating Environment	9
Storage Requirements if Chiller is not installed	9
Foundation Requirements	10
Rigging	17
Chiller Isolation	19
Isolation Pads	19
Spring Isolators	22
Unit Leveling	25

Contents

Figures

1 – Typical CVHE and CVHG Chiller with Refrigerant Pump 10
2 – Clearance Requirements for Cooling and Auxiliary Units 11
3 – Clearance Requirements for Heat Recovery 12
4 – Tube Bundle Locations Showing Cooling Only, Free Cooling, Heat Recovery, and Auxiliary Condenser 13
5 – Recommended Lifting Arrangements 18
6 – Isolation Pad 19
7 – Isolation Spring Placement 21
8 – Chiller Foot/Isolator Orientation 22
9 – Typical Spring Isolator Types and Construction 23
10 – Checking Unit Levelness 25

Tables

1 – Installation Requirements 7
2 – Tube Bundle Locations for Cooling Only and Free Cooling Units 14
3 – Tube Locations for Heat Recovery and Auxiliary Condenser 14
4 – Typical Shipping and Operating Weights for Standard Options 14
5 – Typical Weights for Cooling Only 16
6 – Isolation Pad Loading 20

General Information

Literature Change History

Original issue of manuals.

CVHE-SVN01A-EN–General Information

CVHE-SVN02A-EN–Water Piping Information

CVHE-SVN03A-EN–Electrical Information

Required for chiller installation.

About this Manual

This manual describes proper installation of Model CVHE, CVHF, and CVHG 50 Hz and 60 Hz chillers with the Tracer CH530 Controls platform. See Figure 1 for an illustration of a Centrifugal Chiller with the Tracer CH530 Unit Control Panel.

These chillers are equipped with microcomputer-based control systems whether standard cooling or heat-recovery. A careful review of this information along with the submittal package provided for the unit will assure that the chiller is correctly installed.

Product Description Block

Trane 50 Hz and 60 Hz hermetic CenTraVac units are defined by the product definition and selection system (PDS). Each unit is defined by the product description block which appears on the unit nameplate. A service model number which represents the unit as-built is provided on the unit nameplate, along with a specific unit service number. Both these are utilized whenever parts or service are required. An example is provided in the unit operation and maintenance manual (CVHE-SVU01A-EN).

Commonly Used Acronyms

AFD = Adjustable Frequency Drive

ASME = American Society of Mechanical Engineers

ASHRAE = American Society of Heating, Refrigerating and Air Conditioning Engineers

BAS = Building Automation System

LBU = La Crosse Business Unit

CABS = Auxiliary Condenser Tube-Bundle Size

CDBS = Condenser Bundle Size

CESZ = Condenser Shell Size

CWR = Chilled Water Reset

DTFL = Delta-T at Full Load (i.e., the difference between entering and leaving chilled water temperatures at design load)

EVBS = Evaporator Size

EVSZ = Evaporator Shell Size

FC = Free Cooling

GPM = Gallons-per-Minute

HGBP = Hot Gas Bypass

HVAC = Heating, Ventilating and Air Conditioning

IE = Internally Enhanced Tubes

IPC = Interprocessor Communication

PFCC = Power Factor Correction Capacitor

PSID = Pounds-per-Square-Inch Differential

UCP = Chiller Control Panel

CH530 = Tracer CH530 Platform Unit Control Panel

Unit Nameplate

The unit nameplate is located on the left side of the unit control panel (UCP). The following information is provided on the unit nameplate.

1. Unit model and size descriptor
2. Unit serial number
3. Identifies unit electrical requirements
4. Lists correct operating charge and type of refrigerant
5. Lists unit test pressures and maximum operating pressures
6. Identifies unit installation, operation and maintenance manuals
7. Product description block

Metric Conversion

For tables and charts in this manual, the following conversions apply:

In. × 2.54 = cm

Ft. × 30.48 = cm

Lbs. × .453 = kg

General Information

Responsibilities of Installing Contractor(s)

A list of the contractor responsibilities typically associated with the unit installation Process is provided below. Also see Table 1.

1. Locate and maintain the loose parts, i.e. isolators, bulb wells, temperature sensors, flow sensors or other factory-ordered field installed options, for installation as required. **Loose parts are located in the starter panel on units with factory-installed unit-mounted starters or in the motor terminal box for units with remote-mounted starters.**
2. Install unit on a foundation with flat support surfaces level within 1/16" and of sufficient strength to support concentrated loading.
3. Place manufacturer-supplied isolation pad assemblies under unit. (Use spring isolators for upper floor installations.)
4. Install unit per applicable Trane Installation Manual.
5. Complete all water piping and electrical connections

   Note: Field-piping must be arranged and supported to avoid stress on the equipment. It is strongly recommended that the piping contractor refrain from piping closer than 3'-0" [914 mm] minimum to the equipment. This will allow for proper fit-upon arrival of the unit at the job-site. Any adjustment that is necessary can be made to the piping at that time.
6. Where specified, supply and install valves in water piping upstream and downstream of evaporator and condenser water boxes to isolate shells for maintenance and to balance and trim system.
7. Supply and install flow switches (or equivalent devices) in both chilled water and condenser water piping. Interlock each switch with proper pump starter to ensure that unit can operate only when water flow is established.
8. Supply and install taps for thermometer and pressure gauges in water piping adjacent to inlet and outlet connections of both evaporator and condenser.
9. Supply and install drain valves to each water box.
10. Supply and install vent cocks on each water box.
11. Where specified, supply and install strainers ahead of all pumps and automatic modulating valves.
12. Supply and install pressure-relief piping from pressure-relief rupture disc to atmosphere.
13. If necessary, supply sufficient HCFC-22 refrigerant (maximum of 1 Lb. Per machine) for leak testing and dry nitrogen (8 psig [55 kPa] per machine) for pressure testing under manufacturer's supervision.
14. Start unit under supervision of a qualified service technician.
15. Where specified, supply and insulate evaporator and any other portions of machine as required to prevent sweating under normal operating conditions.
16. **Unit-Mounted Starters Only** Remove top of starter panel and cut access area for line-side wiring; front left quadrant of top provides recommended access to starter lugs.
17. Supply and install wire terminal lugs to starter.
18. **Unit-Mounted Starters Only** Supply and install field wiring to line-side lugs of starter.
19. Supply and install a Refrigerant Monitor per ASHRAE 15 specifications. For additional information, refer to CenTraVac™ Checksheet and Request for Serviceman form 1-27.08. Contact the nearest Trane Office for the most recent up-to-date copy.

General Information

Table 1 – Installation Requirements

Type of Requirement	Trane-Supplied Trane-Installed	Trane-Supplied Field-Installed	Field-Supplied Field-Installed
Rigging			A. Safety chains B. Clevis connectors C. Lifting beam
Isolation		A. Isolation pads or spring isolators	A. Isolation pads or spring isolators
Electrical	A. Circuit breakers or fusible disconnects (optional) B. Unit-mounted starter (optional) C. PFCCs (optional)	A. Jumper bars B. Temperature sensor (optional outdoor air) C. Flow switches (may be field supplied)	A. Circuit breakers or fusible disconnects (optional) B. Remote-mounted starter, AFD (optional) C. PFCCs (Remote-mounted starter option only) D. Terminal lugs E. Ground connection(s) F. Jumper bars G. BAS wiring (optional) H. IPC wiring (AFD and remote-mounted starters only I. Control voltage wiring (AFD and remote-mounted starters only) J. Oil pump interlock wiring (AFD and remote-mounted starters only) K. High condenser pressure interlock wiring (AFD and remote-mounted starters only). L. Chilled water pump contactor and wiring M. Condenser water pump contactor and wiring N. Option relays and wiring (See Table 12)
Water Piping		A. Flow switches (May be field supplied)	A. Thermometers B. Water flow pressure gauges C. Isolation and balancing valves water piping D. Vents and drain valves (1 each per class) E. Pressure-relief valves (for water boxes as required)
Rupture Disc	A. Rupture disc assy		A. Vent line and flexible connector
Insulation	A. Insulation (Optional)		A. Insulation

General Information

Unit Shipment

Each chiller ships from the factory as a hermetically-assembled package; it is factory-piped, wired and tested. All openings are covered or plugged to prevent contamination during shipment and handling.

See Figure 1 for an illustration of a typical chiller and its components. When the unit arrives at the job site, inspect it thoroughly for damage and material shortages. Suggested inspection steps below:

1. To prevent damaging moisture from entering the unit and causing corrosion, each chiller is pressurized with dry nitrogen before shipment.
2. Verify that the chiller is dehydrated by checking the evaporator press for an indication of holding charge pressure. Temporarily attach service gauge to refrigerant charging valves.

   Note: The holding charge should register approximately 5 psig [34.5 kPa) on the gauge at 72°F [22.2°C]. If the charge has escaped, contact your local Trane sales office for instructions.
3. The loose parts box and isolator pads ship in the motor terminal box or unit mounted starter enclosure if so equipped. Remove the sheet metal shipping bracket from the motor terminal box and discard.
4. Check the oil sump sight glasses to verify that the sump was factory-charged with 9 gallons [34 l] of oil on units with a Refrigerant Pump.

   Beginning with design sequence 2K for the CVHE, L0 for the CVHG and U0 for the CVHF a new redesigned lubrication system has been incorporated. Aluminum balls, which are incorporated into the sight glass, float when oil is present, showing a better visible display of the oil level indication.
5. If no oil level indication is visible, contact your local Trane sales office.
6. Compare the unit nameplate data (including electrical characteristics) with the corresponding ordering and shipping information to verify that the correct unit was shipped to the job site.
7. If a thorough inspection of the chiller reveals damage or material shortages, be sure to file these claims with the carrier immediately. Specify the extent and type of damage found, and notify the appropriate Trane sales representative. Do not install a damaged unit without the sales representative's approval.

Storage

If the chiller will be stored at the job site for an extended period of time before it is installed, exercise these precautionary measures to protect the unit from damage.

1. Do not remove the protective coverings factory-installed on the control panel and compressor inlet vane actuator for shipment.
2. Store the chiller in a dry, vibration free and secure area. If factory insulated, protect chiller from prolonged exposure to sunlight.

⚠ CAUTION

TO PREVENT DAMAGE TO THE FACTORY-INSTALLED INSULATION, do not allow excessive exposure to sunlight.

3. Periodically check evaporator pressure to verify that 3 to 5 psig [21 to 34.5kPa] dry nitrogen @ 72°F [22.2°C] ambient holding charge is still in the chiller. If this charge escapes, contact a qualified service organization and the Trane sales engineer that handled the order.

Note: The storage for the microcomputer-based devices in the unit control panel is -40°F [-40°C] to 158°F [70°C].

Recommended Unit Clearances

Adequate clearances around and above the chiller is required to allow sufficient access for service and maintenance operations.

Figures 2, 3, 4, 5 and 6 illustrate the recommended clearances for units with and without options.

Note: In each instance, the minimum vertical clearance above the chiller is three feet.

In addition, be sure to provide working space clearance in front of the unit control panel to satisfy national and local electric codes.

Important: Do NOT install piping or conduit above the compressor motor assembly or behind the suction elbow.

(Specific unit clearance requirements are also indicated in the submittal package provided for your unit.)

General Information

Operating Environment

Besides assuring that the site selected for chiller installation provides the necessary clearances, consider the equipment's operating environment.

To assure that electrical components operate properly, do not locate the chiller in an area exposed to dust, dirt, corrosive fumes, or excessive hear and humidity. Note that the maximum ambient temperature range for chiller operation to 100°F [38°C].

Storage Requirements if Chiller is not installed

1. Store the chiller in a dry, vibration free and secure area on a solid foundation. If the chiller has factory installed insulation, protect the chiller from direct sunlight. Do not remove any of the factory installed protective coverings.
2. Do not charge the chiller with refrigerant. If the refrigerant is at the site, follow the refrigerant manufacture's instructions for refrigerant charge.
3. A dry nitrogen holding charge of 3 to 5 psig [21 to 34.5kPa] was installed at the factory. This positive pressure must be checked monthly to insure that moisture and non- condensibles do not get into the chiller. Check the pressure gauge on the evaporator shell to verify that the dry nitrogen holding charge is still in the chiller. If this charge had escaped, contact a qualified service organization to leak test and repair as necessary and also notify the Trane sales engineer that handled the order.
4. Do not operate the purge unit on the chiller.
5. The oil can be left in the chiller if an oil analysis is initially obtained after six months, and once each succeeding year. If no oil breakdown is evident you do not have to change oil. If breakdown is evident, the oil will need to be replaced. If an oil analysis program is not followed, discarded, and new oil installed just prior to start-up by a qualified service organization.
6. The water side of the chiller requires no special attention but there may be slight scale build-up inside the tubes. Tubes should be inspected and cleaned before the unit is placed into service.
7. If the motor sits for a long time, the bearings could take a set and cause bearing problems/ replacement later. Once every six months the chiller oil pump must be started and the compressor shaft rotated 450 degrees. Contact a qualified service organization to perform this task.
8. If the chiller is stored for more than five years, and the storage is expected to be indefinite, the chiller should be examined for leaks every five years from the initial storage date. Contact a qualified service organization to perform this task.
9. When the unit is to be installed, follow instruction manuals that were shipped with the chiller. The services of a qualified service organization should be obtained to conduct all activities associated with the start-up of a new chiller.

General Information

Figure 1 – Typical Chiller and its Components

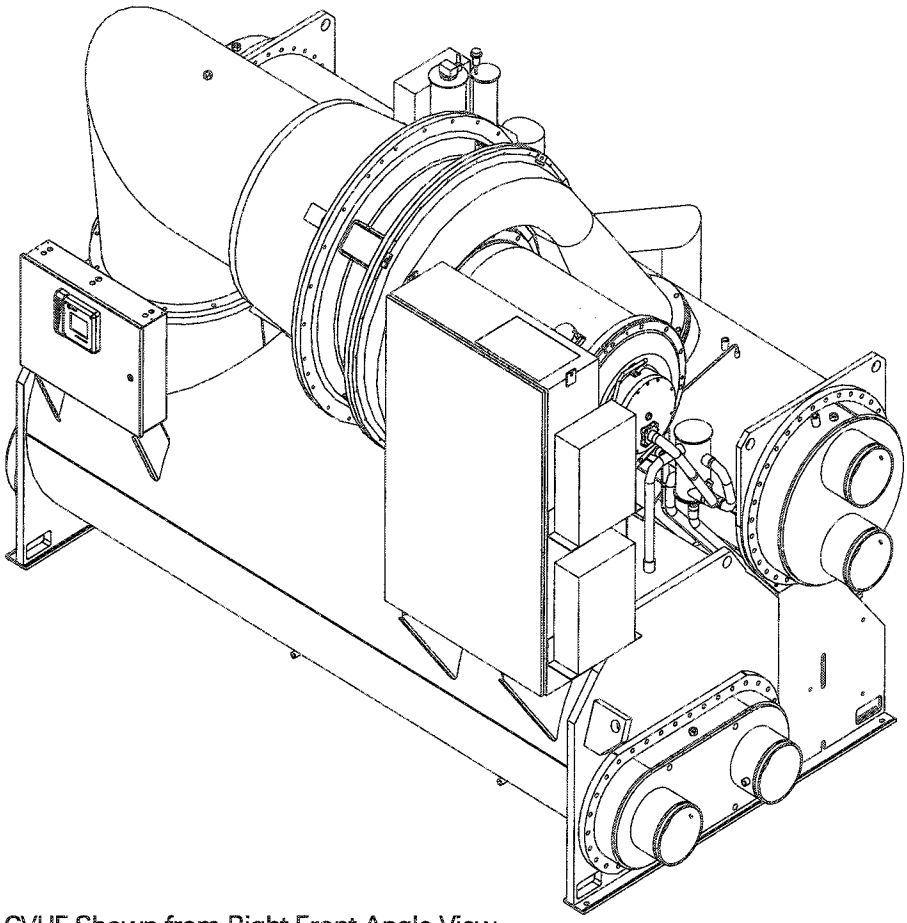

CVHF Shown from Right Front Angle View

Foundation Requirements

Provide rigid, non-warping mounting pads or a concrete foundation as a mounting surface for the chiller. Ensure that the bade is of sufficient strength and mass to properly support the chiller at its full operating weight (i.e., including completed piping, and full operating charges of refrigerant, oil and water.)

Table 2 and Table 3 give a summary of standard tube bundle locations. Table 4 indicates the weights of various chiller options. Table 5 shows typical weights for Cooling Only units.

Notice that the floor loading for all sizes of CVHE, CVHF and CVHG chillers is 62 pounds per square inch [427 kPa].

To assure proper unit operation, the chiller must be level within 1/16" [1.6 mm] over its length and width when set into place on the mounting surface.

The Trane Company will not assume responsibility for equipment problems resulting from an improperly designed or constructed foundation.

⚠ CAUTION

CHILLER OPERATION AT AMBIENT TEMPERATURES EXCEEDING 100°F [38°C] CAN FATIGUE THE UNIT'S RUPTURE DISC, CAUSING IT TO BREAK AT A REDUCED REFRIGERANT PRESSURE (I.E., <15 PSIG [<103 KPA]) STARTER COMPONENT DAMAGE CAN ALSO OCCUR WHEN ADVERSE OPERATING CONDITIONS ARE PRESENT. THE ABOVE CAN HAPPEN, BECAUSE OF THE PANEL'S INABILITY TO DISSIPATE HEAT ADEQUATELY. Take whatever action is necessary to improve the equipment room environment if any of these adverse operating conditions are present.

General Information

Figure 2 – Clearance Requirements for Cooling and Auxiliary Units

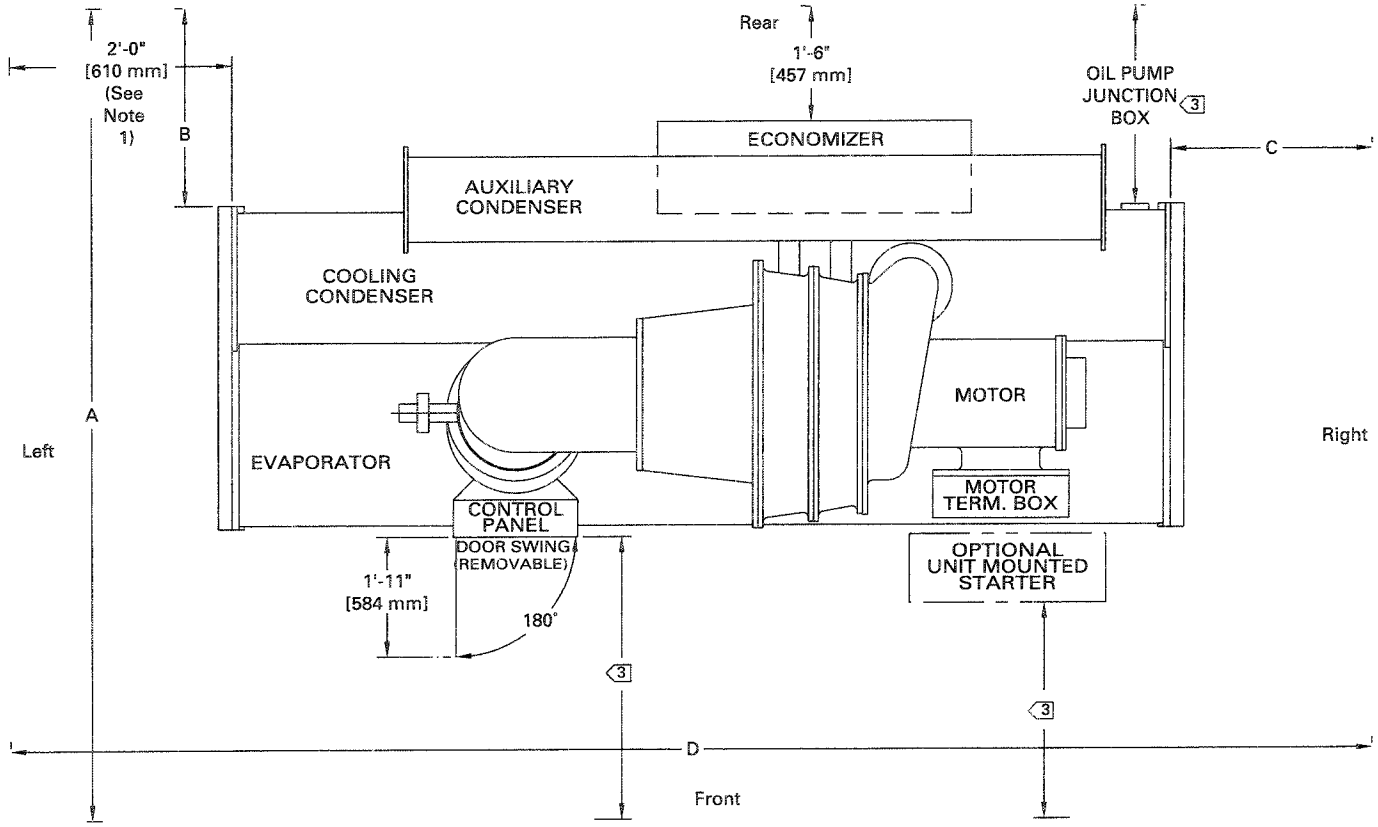

Top View

Notes:
1. Does not include water box. Add wate box dimension to this figure.
2. Minimum vertical clearance over chiller is 3 feet.
3. Minimum work space clearance per national and local electrical codes.

Do not install piping or conduit above compressor motor assembly or behind suction elbow.

Table with Figure 2

CVHE, F, G Cooling and Auxiliary Units (Clearance)

DIM	SHELL COMB	EVSZ 032S/L		EVSZ 050S/L		EVSZ 080S/L		EVSZ 142M/L/E		EVSZ 210L		EVSZ 250E	
		(Inch)	[mm]	(Inch)	[mm]	(Inch)	[mm]	(Inch)	[mm]	(Inch)	[mm]	(Inch)	[mm]
A1	ALL	10'-3-1/4"	3131	11'-1-5/8"	3393	12'-5-1/4"	3790	14'-5-3/4"	4413	15'-3-3/4"	4667	16'-5-1/2"	5017
A2	ALL	11'-4-1/2"	3466	12'-5-1/2"	3797	13'-1-5/8"	4003	15'-1"	4597	15'-7"	4750	16'-6-1/2"	5042
B	ALL	2'-6-5/8"	777	2'-10"	864	2'-6-3/8"	772	2'-11-3/8"	899	3'-0-1/8"	918	2'-11-1/8"	893
	S/S	11'-9"	3581	11'-9"	3581	11'-9"	3581	N/A	N/A	N/A	N/A	N/A	N/A
C	S/L, M/L, LL	15'-6"	4724	15'-6"	4724	15'-6"	4724	15'-6"	4724	15'-6"	4724	N/A	N/A
	E/L	N/A	N/A	N/A	N/A	N/A	N/A	17'-5"	5309	N/A	N/A	17'-5"	5309
	S/S	26'-5"	8052	26'-6-3/8"	8087	27'-4-1/4"	8338	N/A	N/A	N/A	N/A	N/A	N/A
D	S/L, M/L, L/L	33'-11-1/4"	10343	34'	10363	34'-10-1/2"	10640	35'-5-1/4"	10801	35'-5-1/4"	10801	N/A	N/A
	E/L	N/A	N/A	N/A	N/A	N/A	N/A	39'-3"	11963	N/A	N/A	39'-6"	12039

A1 = Without Unit Mounted Starter
A2 = With Unit Mounted Starter

Notes:
1. EVSZ = Evaporator Size, L = Long Shell; S = Short Shell; E = Extended Shell, M = Medium Shell
2. Clearance requirement to evaporator tube removal does not includ water box. Add water box dimension to this figure.

General Information

Figure 3 – Clearance Requirements for Heat Recovery Units

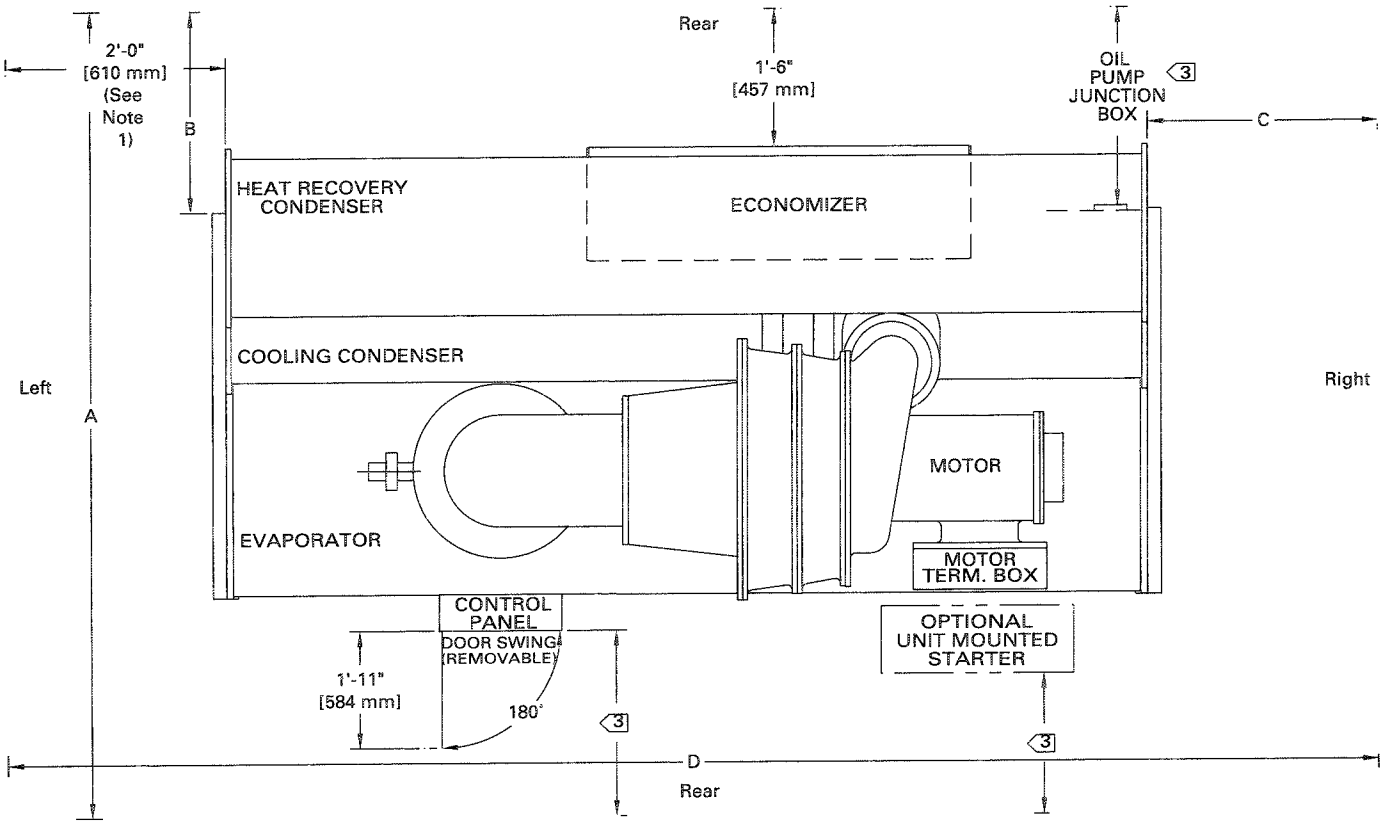

Top View

Notes:
1. Does not include water box.
2. Minimum vertical clearance over chiller is 3 feet.
3. Minimum work space clearance per national and local electrical codes.

Do not install piping or conduit above compressor motor assembly or behind suction elbow.

Table with Figure 3

CVHE, F, G Cooling and Auxiliary Units (Clearance)

DIM	SHELL COMB	EVSZ 032S/L		EVSZ 050S/L		EVSZ 080S/L		EVSZ 142M/L/E		EVSZ 210L		EVSZ 250E	
		(Inch)	[mm]	(Inch)	[mm]	(Inch)	[mm]	(Inch)	[mm]	(Inch)	[mm]	(Inch)	[mm]
A1	All	10'-6-5/8"	3216	11'-2-3/4"	3422	12'-5-3/8"	3794	14'-10"	4521	15'-8-1/2"	4788	N/A	N/A
A2	All	11'-8"	3555	12'-6-5/8"	3825	13'-1-3/4"	4006	15'-5-1/4"	4705	15'-11-3/4"	4870	N/A	N/A
B	All	2'-10"	864	2'-11-1 /8"	893	2'-6-1 /2"	775	3'-3-5/8"	1006	3'-10-1 /4"	1174	N/A	N/A
	S/S	11'-9"	3581	11'-9"	3581	11'-9"	3581	N/A	N/A	N/A	N/A	N/A	N/A
C	S/L, M/L, L/L	15'-6"	4724	15'-6"	4724	15'-6"	4724	15'-6"	4724	15'-6"	4724	N/A	N/A
	E/L	N/A	N/A	N/A	N/A	N/A	N/A	17'-5"	5309	N/A	N/A	N/A	N/A
	S/S	26'-5"	8052	26'-6-3/8"	8087	27'-4-1/4"	8338	N/A	N/A	N/A	N/A	N/A	N/A
D	S/L, M/L, L/L	33'-11-1 /4"	10343	34'	10363	34'-10-1 /2"	10630	35'-5-1 /4"	10801	35'-5-1 /4"	10801	N/A	N/A
	E/L	N/A	N/A	N/A	N/A	N/A	N/A	39'-3"	11963	N/A	N/A	N/A	N/A

A1 = Without Unit Mounted Starter
A2 = With Unit Mounted Starter

Notes:
1. EVSZ = Evaporator Size, L = Long Shell; S = Short Shell; E = Extended Shell
2. Clearance requirement to evaporator tube removal does not include water box. Add water box dimension in this figure.
3. Does not include water box. Add water box dimension to this figure.

General Information

Figure 4 – Tube Bundle Locations Showing Cooling Only, Free Cooling and Heat Recovery and Auxiliary Condenser Units

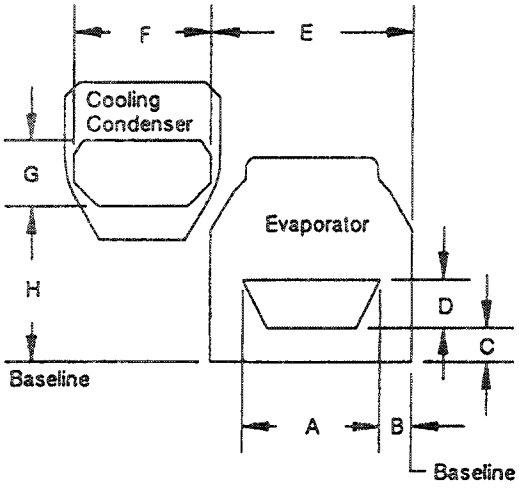

Free Cooling Units

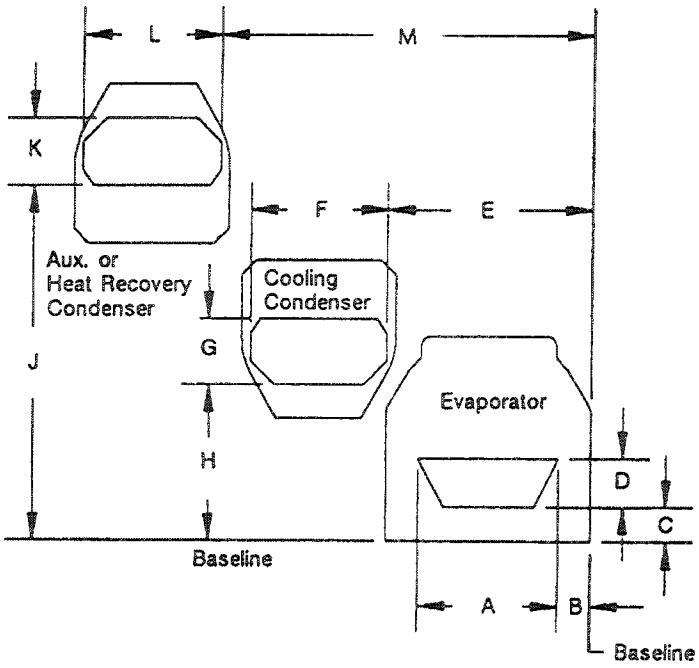

Heat Recovery and Auxiliary Condenser Units

Table 2 – Tube Bundle Locations for Cooling Only and Free Cooling Units (Inches)

Shell Size	Cooling Only and Free Cooling Units							
	A	B	C	D	E	F	G	H
032	2'-0-3/4"	2-5/8"	11-1/8"	7-1/4"	2'-7-3/4"	18"	10"	2'-2-3/8"
050	2'-6-3/4"	2-7/8"	9-3/8"	9-5/8"	3'-1-1/8"	1'-11-1/8"	1'-2-3/8"	2'-3-3/4"
080	3'-5-1/8"	4-1/4"	6-1/4"	11-3/8"	3'-7-3/4"	2'-4-1/8"	1'-7-1/4"	3'-7"
142	3'-10-3/8"	4-1/4"	6-5/8"	1'-2-5/8"	4'-2-3/8"	3'-3-1/8"	2'-0-7/8"	3'-8-3/8"
210	4'-5"	4-1 /2"	7-1 /8"	1'-5"	4'-11 "	3'-7-1 /2"	2'-4-1 /8"	3'-9-3/4"
250	5'-0-3/4"	5-1/2"	7-1/8"	1'-7-1/4"	5'-8-5/8"	3'-10-3/4"	2'-4-1/8"	4'-0-1/4"

Table 3 – Tube Locations for Heat Recovery and Auxiliary Condenser Units (Inches)

	Shell Size	Heat Recovery				Auxiliary Condenser			
		J	K	L	M	J	K	L	M
	032	4'-6-3/8"	10-1/4"	1'-6-1/2"	4'	4'-6-3/4"	9-1/8"	1'-2"	3'-11-3/4
CVHE	050	5'-2-3/8"	1'-2-3/8"	1'-10-3/8"	4'-6"	5'-0-7/8"	9-1/8"	1'-2"	4'-8-1/4
CVHEF/G	050	6'-2-1/2"	1'-2-3/8"	1'-10-3/8"	4'-10"	6'-0-7/8"	9-1/8"	1'-2"	5'-0-5/8
	080	T-3-1/8"	1'-7-1/4"	2'-4-7/8"	4'-8-3/8"	6'-10-1/2"	9-1/8"	1'-2"	5'-8-7/8
	142	8'-7-3/8"	2'-0-7/8"	3'-2-1/2"	6'-2"	7'-9-3/8"	9-1/8"	1'-2"	7'-3-5/8
	210	8'-7-1/2"	2'-4-1/8"	3'-7-1/2"	6'-6-5/8"	8'-7-5/8"	9-1/8"	1'-2"	3'-9-3/4
	250	Not Available							

Table 4 – Typical Shipping and Operating Weights (Lbs.) (see note 1)

Cond Size	Aux Cond Size 80		Aux Cond Size 130		Heat Rec Cond		Free Cooling	
CDSZ	Ship	Oper	Ship	Oper	Ship	Oper	Ship	Oper
032S	825	1057	960	1248	2119	2624	500	785
032L	825	1057	960	1248	2663	3263	500	785
050S	825	1057	960	1248	3170	4018	750	1290
050L	825	1057	960	1248	3985	4986	750	1290
080S	825	1057	960	1248	5340	6593	750	1360
080L	825	1057	960	1248	6683	8180	750	1360
142L	825	1057	960	1248	12180	14666	1400	2400
210L	825	1057	960	1248	16023	19299	1400	2400

Notes:
1. Unit-Mounted Starter Option = 530 Lbs. (Shipping and Operating)
2. Weights shown are accurate within ± 3% and are calculated with non-marine 150 psig water boxes. Marine-style water boxes may add considerably more weight; contact LBU Marketing for details.
3. Operating weights include refrigerant, oil and water charges.
4. For more specific data on weights and isolator loading, refer to the unit submittal package.

General Information

SI Units

Table 2 – Tube Bundle Locations for Cooling Only and Free Cooling Units (mm)

Shell Size	Cooling Only and Free Cooling Units							
	A	B	C	D	E	F	G	H
32	629	67	283	184	813	457	254	670
50	781	73	238	244	943	588	365	705
80	1044	108	159	289	1111	715	489	1095
142	1178	108	168	677	1279	993	632	1127
210	1346	114	181	432	1498	1105	715	1162
250	1543	140	181	489	1743	1187	715	1225

Table 3 – Tube Locations for Heat Recovery and Auxiliary Condenser Units (mm)

	Shell Size	Heat Recovery				Auxiliary Condenser			
		J	K	L	M	J	K	L	M
	32	1381	260	470	1219	1390	232	356	1212
CVHE	50	1584	365	568	1371	1546	232	356	1429
CVHEF/G	50	1893	365	568	1473	1852	232	356	1540
	80	2213	489	734	1432	2096	232	356	1749
	142	2625	632	978	1880	2372	232	356	2226
	210	2629	715	1108	1997	2632	232	356	1162
	250	Not Available							

Table 4 – Typical Shipping and Operating Weights (Kg) (see note 1)

Cond Size	Aux Cond Size 80		Aux Cond Size 130		Heat Rec Cond		Free Cooling	
CDSZ	Ship	Oper	Ship	Oper	Ship	Oper	Ship	Oper
032S	374	479	435	566	961	1190	227	356
032L	374	479	435	566	1208	1480	227	356
050S	374	479	435	566	1438	1823	340	585
050L	374	479	435	566	1808	2262	340	585
080S	374	479	435	566	2422	2991	340	617
080L	374	479	435	566	3031	3710	340	617
142L	374	479	435	566	5525	6652	635	1089
210L	374	479	435	566	7268	8754	635	1089

Notes:
1. Unit-Mounted Starter Option = 236 Kg (Shipping and Operating)
2. Weights shown are accurate within ± 3% and are calculated with non-marine 1034 kPa water boxes. Marine-style water boxes may add considerably more weight; contact LBU Marketing for details.
3. Operating weights include refrigerant, oil and water charges.
4. For more specific data on weights and isolator loading, refer to the unit submittal package.

General Information

Table 5 – Typical Weights for Cooling Only

Type	Nton	Shell Length Designators		Maximum Weights (Lbs)		Maximum Weights (Kg)	
		EVSZ	CDSZ	Shipping	Operating	Shipping	Operating
CVHE	230-320	032S	032S	13191	14379	5983	6522
CVHE	230-320	032S	032L	13735	15018	6230	6812
CVHE	230-320	032L	032L	14381	15892	6523	7209
CVHE	230-320	050S	050S	16049	18000	7280	8165
CVHE	230-320	050S	050L	16864	18968	7650	8604
CVHE	230-320	050L	050L	17796	20259	8072	9189
CVHE	360-500	050S	050S	16699	18650	7575	8460
CVHE	360-500	050S	050L	17514	19618	7944	8899
CVHE	360-500	050L	050L	18446	20909	8367	9484
CVHE	360-500	080S	080S	22682	25797	10289	11702
CVHE	360-500	080S	080L	24025	27384	10898	12421
CVHE	360-500	080L	080L	25605	29497	11614	13380
CVHE	560-800	080S	080S	24432	27547	11082	12495
CVHE	560-800	080S	080L	25775	29134	11692	13215
CVHE	560-800	080L	080L	27355	31247	12408	14174
CVHF	305-485	050S	050S	15694	17645	7119	8004
CVHF	305-485	050S	050L	16509	18613	7488	8443
CVHF	305-485	050L	050L	17441	19904	7911	9028
CVHF	305-485	080S	080S	21652	24767	9821	11234
CVHF	305-485	080S	080L	22995	26354	10431	11954
CVHF	305-485	080L	080L	24575	28467	11147	12913
CVHF	555-640	050S	050S	17314	19265	7854	8739
CVHF	555-640	050S	050L	18129	20233	8223	9178
CVHF	555-640	050L	050L	19061	21524	8646	9763
CVHF	555-640	080S	080S	23272	26387	10556	11969
CVHF	555-640	080S	080L	24615	27974	11165	12689
CVHF	555-640	080L	080L	26195	30087	11882	13647
CVHF	650-910	080S	080S	24242	27357	10996	12409
CVHF	650-910	080S	080L	25585	28944	11605	13129
CVHF	650-910	080L	080L	27165	31057	12322	14087
CVHF	1060-1280	142M	142L	35538	41116	16120	18650
CVHF	1060-1280	142L	142L	36352	42286	16489	19181
CVHF	1060-1280	142M	142L	36138	41716	16392	18922
CVHF	1060-1280	142L	142L	36952	42886	16761	19453
CVHF	1060-1280	142E	142L	37840	44303	17164	20096
CVHF	1060-1280	210L	210L	44666	52513	20260	23820
CVHF	1060-1280	250E	250L	54646	65616	24787	29763
CVHF	1470	210L	210L	49980	57820	22671	26227
CVHF	1470-1720	250E	250L	59960	70930	27198	32174
CVHG	480-565	050S	050S	18449	20400	8368	9253
CVHG	480-565	050S	050L	19264	21368	8738	9693
CVHG	480-565	050L	050L	20196	22659	9161	10278
CVHG	480-565	080S	080S	24432	27547	11082	12495
CVHG	480-565	080S	080L	25775	29134	11692	13215
CVHG	480-565	080L	080L	27355	31247	12408	14174
CVHG	670-780	080S	080S	25032	28147	11355	12767
CVHG	670-780	080S	080L	26375	29734	11964	13487
CVHG	670-780	080L	080L	27955	31847	12680	14446
CVHG	670-780	142M	142L	36627	42205	16614	19144
CVHG	920-1067	142L	142L	37441	43375	16983	19675
CVHG	920-1067	142M	142L	37427	43005	16977	19507
CVHG	920-1067	142L	142L	38241	44175	17346	20038
CVHG	920-1067	210L	210L	45955	53802	20845	24405

General Information

Note: Immediately report any unit damage incurred during handling or installation at the job site to Trane sales office.

Rigging

Lifting is the recommended method for moving chillers. Suggested lifting arrangements for standard and heat-recovery units are illustrated in Figure 5.

Note that each of the cables used to lift the unit must be capable of supporting the entire weight of the chiller.

⚠ WARNING

LIFT THE CHILLER HORIZONTALLY. Failure to do so could result in death or serious injury and equipment damage.

See Tables 2, 3 and 5 for shipping weights.

Refer to lifting arrangement and rigging in Figure 5. Notice that the lifting beam used to lift the unit must be at least 12 feet [3.7 m] long.

To lift the chiller properly, insert clevis connections at the points indicated in Figure 5, a 2" [51 mm] diameter lifting hole is provided at each of these points. Next attach the lifting chains or cables.

Once the lifting cables are in place, attach a safety chain or cable between the first-stage casting of the compressor and the lifting beam. To do this, remove a restraining bolt from the compress first-stage casting and replace it with an eyebolt.

Note: There should not be tension on this safety cable; it is used only to prevent the unit from rolling during the lift.

When the lift is complete, detach the clevis connections and safety chain. Then, remove the eyebolt that was used to secure the safety chain to the compressor, and reinstall the retaining colt in its place.

If the chiller cannot be moved using the conventional rigging method just described, consider these points.

1. If job site conditions require rigging of the chiller at an angle greater than 45° from horizontal (end-to-end) dowel-pin the compressor and remove it from the unit. Be sure to contact a qualified service organization for specific rigging instructions.

⚠ CAUTION

IF THE UNIT WILL BE LIFTED AT AN ANGLE GREATER THAN 15° FROM END-TO-END, REMOVE THE OIL FROM THE OIL TANK. Failure to do so, will cause oil to drain out of oil tank into other areas of chiller. It will be extremely difficult to return the oil to the oil tank even during operation.

2. When lifting the chiller is either impractical or undesirable, attach cables or chains to the jacking slots shown in Figure 5; then push or pull the unit across a smooth surface.

Note: The oil tank with the refrigerant pump is mounted under the condenser and may be damaged by a fork truck.

⚠ CAUTION

DO NOT USE A FORKLIFT TO REMOVE THE CHILLER. Using a forklift can result in damaged equipment.

⚠ CAUTION

CONSULT THE TRANE COMPANY BEFORE LIFTING THE COMPRESSOR/MOTOR ASSEMBLY FROM THE SHELLS WITHOUT FACTORY-INSTALLED DOWELING IN THE COMPRESSOR CASTING FLANGES. Failure to do so can result in misalignment of the compressor castings.

3. If removal of the compressor or economizer assembly is necessary to move the chiller into its operating location, contact The Trane Company for special instructions concerning chiller disassembly and reassembly procedures.

⚠ WARNING

BE CAREFUL TO AVOID DAMAGING UNIT WIRING DURING RIGGING, ASSEMBLY AND DISASSEMBLY.

General Information

Figure 5 – Recommended Lifting Arrangements for CVHE, CVHF, and CVHG Units

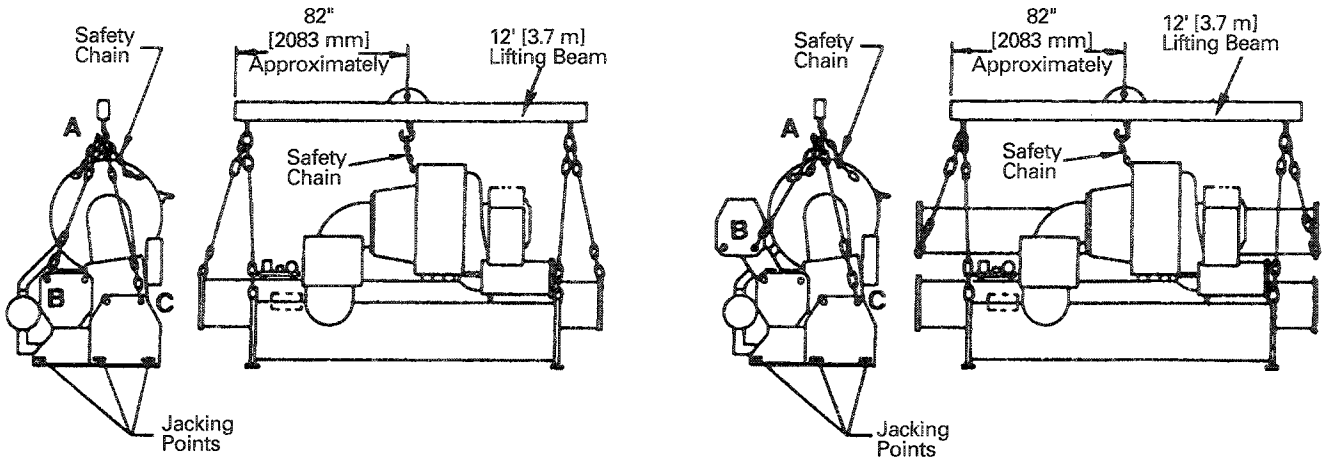

⚠ WARNING

DO NOT USE CHAINS OR CABLES OTHER THAN AS SHOWN. Failure to heed this warning by using alternative lifting arrangements may result in death or serious injury and equipment damage.

Notes:
1. Lifting chains (or cables) may or may not be the same length between Points A and B, or between Points A and C. Adjust as necessary for an even lift.
2. Lifting holes provided on chiller to attach chains are 2" [51 mm] in diameter.
3. Attach safety chain (or cable) as shown, and **without tension**. The safety chain is **not** used for lifting, but is there to prevent the unit from rolling.
4. Do **not** forklift the unit!

General Information

Chiller Isolation

To minimize sound and vibration transmission through the building structure and to assure proper weight distribution over the mounting surface, install isolation pads or spring isolators under the chiller feet.

Note: Isolation pads are provided with each chiller unless spring isolators are specified on the sales order.

Specific isolator loading data is provided in the unit submittal package. Also refer to Table 6. If necessary, contact your local Trane sales office for further information.

Isolation Pads

When the unit is ready for final placement, position isolation pads end for end under the full length of the chiller leg. The pads measure 6"x18" [152.4x457 mm] and on some units there may be small gaps between pads.

Remember that the chiller must be level within 1/16" [1.6 mm] over its length and width after it is lowered onto the isolation pads. In addition, all piping connected to the chiller must be properly isolated and supported so that it does not place any stress on the unit.

Figure 6 – Isolation Pad

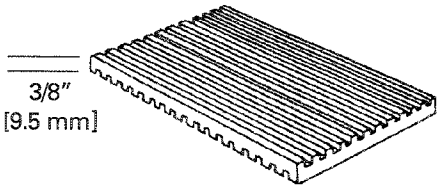

General Information

Table 6 – Isolation Pad Loading

Type	Nton	Shell Length Designators		Isolator Loading			
		EVSZ	CDSZ	Left Pad (lbs)	Left Pad (Kg)	Right Pad (lbs)	Right Pad (Kg)
CVHE	230-320	032S	032S	5758	2612	8621	3910
CVHE	230-320	032S	032L	6323	2868	8695	3944
CVHE	230-320	032L	032L	6394	2900	9519	4318
CVHE	230-320	050S	050S	7573	3435	10427	4730
CVHE	230-320	050S	050L	8428	3823	10540	4781
CVHE	230-320	050L	050L	8541	3874	11718	5315
CVHE	360-500	050S	050S	7883	3576	10767	4884
CVHE	360-500	050S	050L	8737	3963	10881	4936
CVHE	360-500	050L	050L	8818	4000	12091	5484
CVHE	360-500	080S	080S	11391	5167	14406	6535
CVHE	360-500	080S	080L	12791	5802	14594	6620
CVHE	360-500	080L	080L	12966	5881	16531	7498
CVHE	560-800	080S	080S	11910	5402	15637	7093
CVHE	560-800	080S	080L	13308	6037	15826	7179
CVHE	560-800	080L	080L	13477	6113	17855	8099
CVHF	305-485	050S	050S	7298	3310	10347	4693
CVHF	305-485	050S	050L	8154	3699	10459	4744
CVHF	305-485	050L	050L	8311	3770	11593	5259
CVHF	305-485	080S	080S	10777	4888	13990	6346
CVHF	305-485	080S	080L	12178	5524	14177	6431
CVHF	305-485	080L	080L	12436	5641	16031	7272
CVHF	555-640	050S	050S	7701	3493	11564	5245
CVHF	555-640	050S	050L	8556	3881	11677	5297
CVHF	555-640	050L	050L	8726	3958	12798	5805
CVHF	555-640	080S	080S	11214	5087	15173	6882
CVHF	555-640	080S	080L	12614	5722	15360	6967
CVHF	555-640	080L	080L	12876	5841	17211	7807
CVHF	650-910	080S	080S	11835	5368	15522	7041
CVHF	650-910	080S	080L	13233	6002	15711	7127
CVHF	650-910	080L	080L	13427	6090	17630	7997
CVHF	650-910	142M	142L	19976	9061	21675	9832
CVHF	650-910	142L	142L	18791	8524	23495	10657
CVHF	1060-1280	142M	142L	20076	9106	22170	10056
CVHF	1060-1280	142L	142L	18919	8582	23967	10871
CVHF	1060-1280	142E	142L	21235	9632	23068	10464
CVHF	1060-1280	210L	210L	23030	10446	29483	13373
CVHF	1060-1280	250E	250L	30991	14058	34626	15706
CVHF	1470	210L	210L	26420	11984	31400	14243
CVHF	1470-1720	250E	250L	33520	15205	37410	16969
CVHG	480-565	050S	050S	8551	3879	11849	5375
CVHG	480-565	050S	050L	9403	4265	11965	5427
CVHG	480-565	050L	050L	9439	4282	13220	5997
CVHG	480-565	080S	080S	11910	5402	15637	7093
CVHG	480-565	080S	080L	13308	6037	15826	7179
CVHG	480-565	080L	080L	13477	6113	17771	8061
CVHG	670-780	080S	080S	12129	5502	16018	7266
CVHG	670-780	080S	080L	13527	6136	16207	7351
CVHG	670-780	080L	080L	13683	6207	18164	8239
CVHG	670-780	142M	142L	20575	9333	22160	10052
CVHG	920-1067	142L	142L	19389	8795	23986	10880
CVHG	920-1067	142M	142L	21053	9550	23082	10470
CVHG	920-1067	142L	142L	19767	8966	24409	11072
CVHG	920-1067	210L	210L	23816	10803	29986	13602

General Information

Figure 7 – Isolation Spring Placement

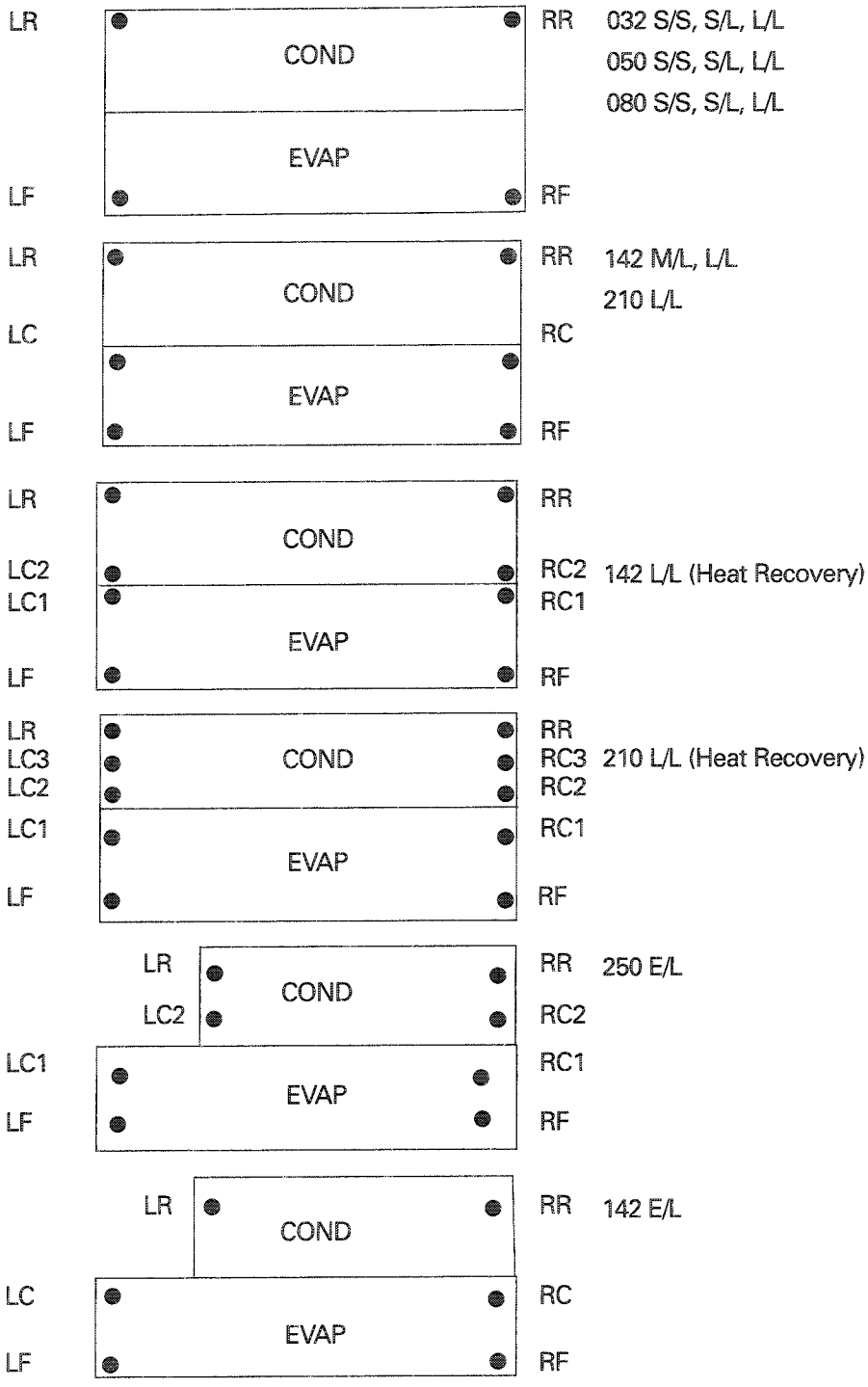

General Information

Spring Isolators

Spring isolators should be considered whenever chiller installation is planned for an upper story location. Base isolator selection and placement on the information presented in Figures 8 and 9. (Notice that three types of spring isolators, each with their own maximum loading characteristics, are used with the CVHE/F/G chillers.)

Spring isolators typically ship assembled and ready for installation. To install and adjust the isolators properly, follow the instructions given.

Note: Do not adjust the isolators until the chiller is piped and charged with refrigerant and water.

1. Position the spring isolators under the chiller as shown in Figures 7 and 8. Make sure that each isolator is centered in relation to the tube sheet.
2. Set the isolators on the sub-base; shim or grout as necessary to provide a flat, level surface at the same elevation for all mountings. Be sure to support the full underside of the isolator bade plate; do not straddle gaps or small shim.
3. If required, bolt the isolators to the floor through the slots provided or cement the pads.

   Note: Fastening the isolators to the floor is not necessary unless specified.
4. If the chiller must be fastened to the isolators, insert cap screws through the chiller base and into the holes tapped in the upper housing of each isolator. However, do not allow the screws to protrude below the underside of the isolator upper housing. An alternative method of fastening the chiller to the isolators is to cement the neoprene pads.
5. Set the chiller on the isolators; refer to "Rigging" for listing instructions.

   The weight of the chiller will force the upper housing of each isolator down, perhaps causing it to rest on the isolator's lower housing. Figure 9 illustrates spring isolator construction.
6. Check the clearance on each isolator. If this dimension is less than ¼ inch on any isolator, use a wrench to turn the adjusting bolt one complete revolution upward.

   Repeat this operation until a ¼ inch clearance is obtained at one or more isolators.

   Note: When the load is applied to the isolators (Step 5), the top plate of each isolator moves down to compress the springs until either:

   (1) The springs support the load, or

   (2) The top plate rests on the bottom housing of the isolator.

   a. If the springs are supporting the load, screwing down on the adjusting bolt (Step 7) will immediately begin to raise the chiller.
7. Turn the adjusting bolt on each of the remaining isolators to obtain the required minimum clearance of ¼" [6.9 mm].
8. Once the minimum required clearance is obtained on each of the isolators, level the chiller by turning the adjusting bolt on each of the isolators on the low side of the unit. Be sure to work from one isolator to the next. Remember that the chiller must be level to within 1/16" [1.6 mm] over its length and width, and that clearance of each isolator must be ¼" [6.9 mm].

Figure 8 – Chiller Foot/Isolator Orientation

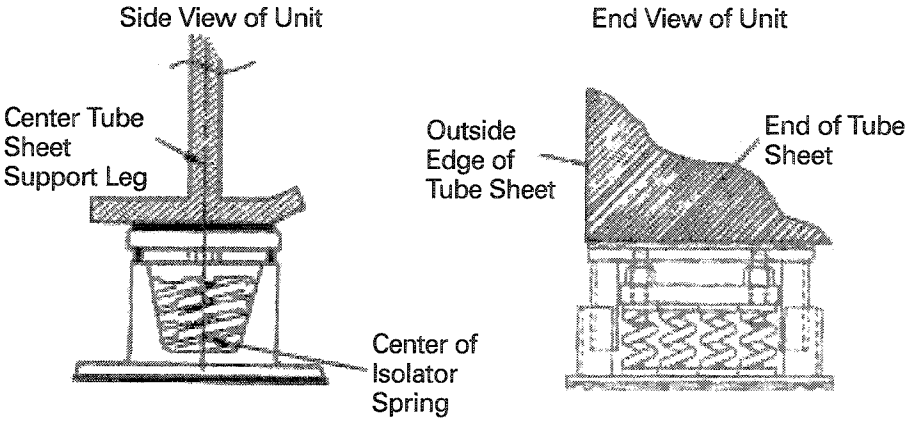

Note: The spring isolator must be centered in relation to the tube sheet. Do **not** align the isolator with the flat part of the chiller foot since the tube sheet is often off-center.

Note: The length of the isolator should be parallel to the leg.

General Information

Figure 9 – Typical Spring Isolator Types and Construction

Type CT-4 Spring Isolators

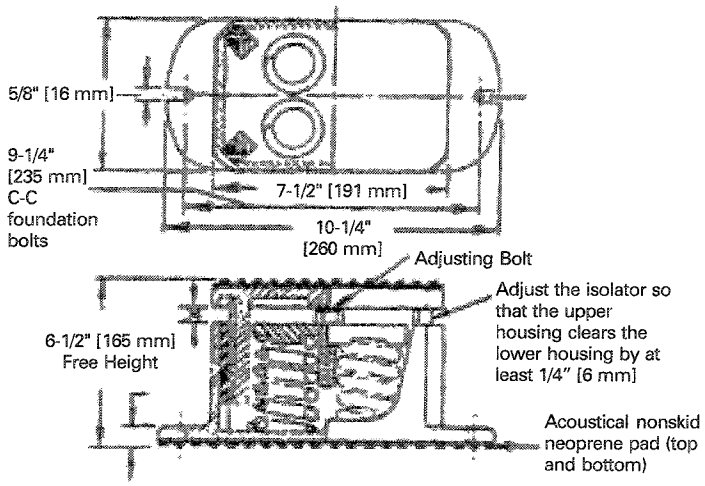

Isolator Type and Size	Maximum Load (lbs.)	Deflection (Inches)	Spring Color Coding
CT-4-25	1,800	1.22	Red
CT-4-26	2,400	1.17	Purple
CT-4-27	3,000	1.06	Orange
CT-4-28	3,600	1.02	Green
CT-4-31	4,400	0.83	Gray
CT-4-32	5,200	0.74	White

Isolator Type and Size	Maximum Load (Kg)	Deflection (mm)	Spring Color Coding
CT-4-25	816	31	Red
CT-4-26	1,089	30	Purple
CT-4-27	1,361	27	Orange
CT-4-28	1,633	26	Green
CT-4-31	1,996	21	Gray
CT-4-32	2,359	19	White

Type CT-7 Spring Isolators

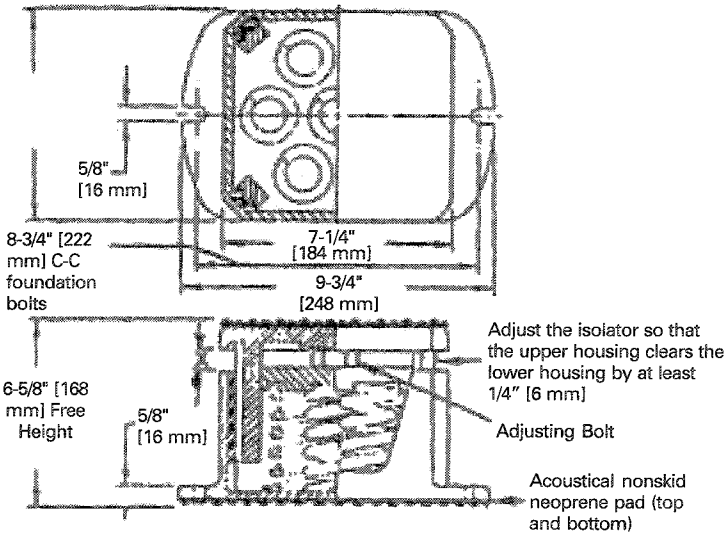

Isolator Type and Size	Maximum Load (lbs.)	Deflection (Inches)	Spring Color Coding
CT-7-25	3,150	1.22	Red
CT-7-26	4,200	1.17	Purple
CT-7-27	5,250	1.06	Orange
CT-7-28	6,300	1.02	Green
CT-7-31	7,700	0.83	Gray
CT-7-32	9,100	0.74	White

Note: Each Type CT-7 Spring Isolator has 7 Springs

Isolator Type and Size	Maximum Load (Kg)	Deflection (mm)	Spring Color Coding
CT-4-25	1,429	31	Red
CT-4-26	1,905	30	Purple
CT-4-27	2,381	27	Orange
CT-4-28	2,858	26	Green
CT-4-31	3,493	21	Gray
CT-4-32	4,128	19	White

Note: Each Type CT-7 Spring Isolator has 7 Springs

General Information

Figure 9 (continued) – Typical Spring Isolator Types and Construction

CT-12 Spring Isolators

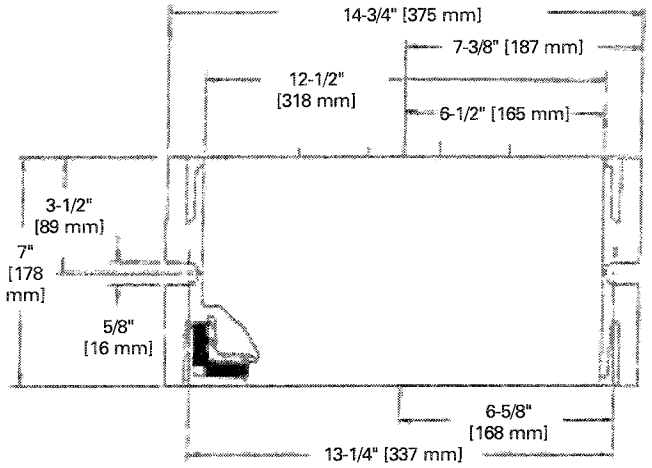

Isolator Type and Size	Maximum Load (lbs.)	Deflection (Inches)	Spring Color Coding
CT-12-25	5,400	1.22	Red
CT-12-26	7,200	1.17	Purple
CT-12-27	9,000	1.06	Orange
CT-12-28	10,800	1.02	Green
CT-12-31	13,200	.83	Gray
CT-12-32	15,600	.74	White

Isolator Type and Size	Maximum Load (Kg)	Deflection (mm)	Spring Color Coding
CT-4-25	2,449	31	Red
CT-4-26	3,266	30	Purple
CT-4-27	4,082	27	Orange
CT-4-28	4,899	26	Green
CT-4-31	5,988	21	Gray
CT-4-32	7,076	19	White

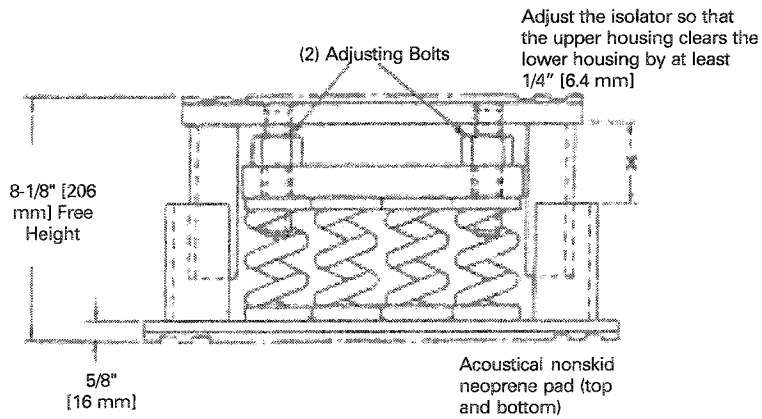

General Information

Unit Leveling

Follow the instructions outlined below and illustrated in Figure 10 to determined whether or not the chiller is set level.

1. Measure an equal distance up from each foot of the chiller and make a punch mark at each measured distance.
2. Suspend a clear plastic tube along the length of the chiller as shown in Figure 10.
3. Fill the tube with water until the level aligns with the punch mark at one end of the chiller; then check the water level at the opposite mark.

   If the water level does not align with the punch mark, use full-length shims to raise one end of the chiller until the water level at each end of the tube aligns with the punch marks at both ends of the chiller
4. Once the unit is level across its length, repeat Steps 1 through 3 to see if unit is level across the width.

Figure 10 – Checking Unit Levelness

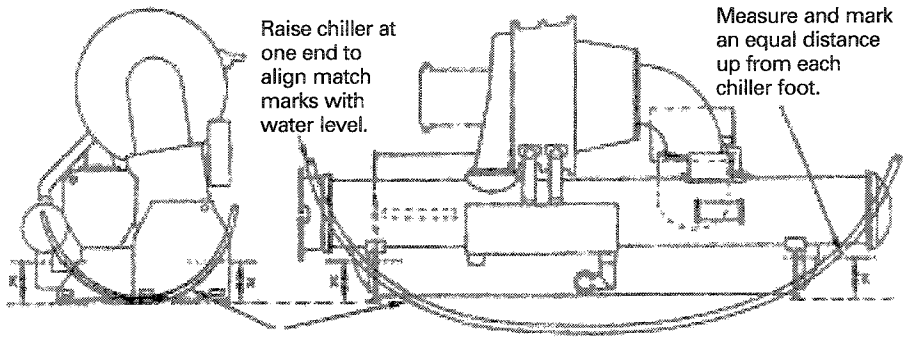

TRANE®

The Trane Company
An American Standard Company
www.trane.com

For more information contact
your local district office or
e-mail us at comfort@trane.com

Literature Order Number	CVHE-SVN01A-EN
File Number	SV-RF-CTV-CVHE-SVN01A-EN-0901
Supersedes	New
Stocking Location	La Crosse

Since The Trane Company has a policy of continuous product and product data improvement, it reserves the right to change design and specifications without notice.

Only qualified technicians should perform the installation and servicing of equipment referred to in this publication.

TRANE

Installation – Piping Information

Water Cooled CenTraVac™ With CH530

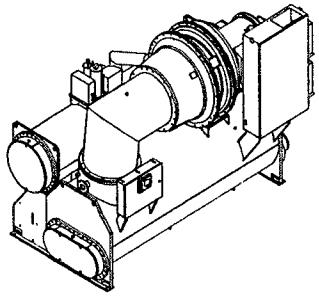
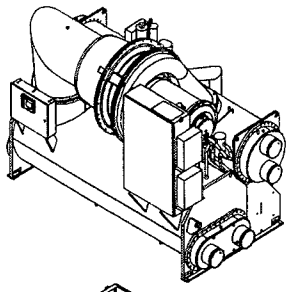
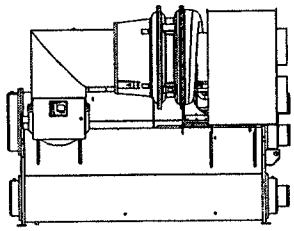
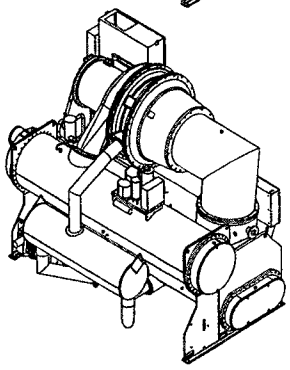
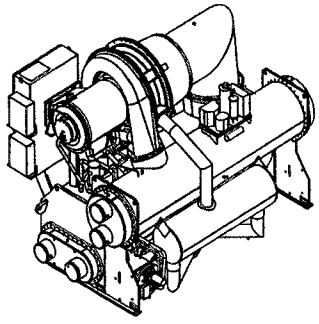
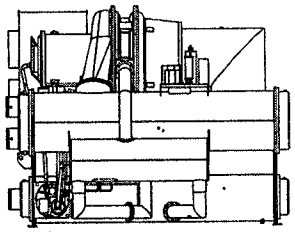

Required Installation Information:
CVHE-SVN01A-EN – General Information
CVHE-SVN02A-EN – Piping Information
CVHE-SVN03A-EN – Electrical Information

X39640646010

CVHE-SVN02A-EN

Warnings and Cautions

Notice

Warnings and Cautions appear at appropriate locations throughout this manual.

Read these carefully.

Warning: Indicates a potentially hazardous situation which, if not avoided, could result in death or serious injury.

Caution: Indicates a potentially hazardous situation which, if not avoided, may result in minor or moderate injury. It may also be used to alert against unsafe practices and where property-damage-only accidents could occur.

© 2001 American Standard Inc. All rights reserved.

Contents

Warnings and Cautions
Overview
Water Treatment
Pressure Gauges
Valves
Strainers
Flow-Sensing Devices
Evaporator and Condenser Water Piping
Water Box Locations
Water Piping Circuits
Water Piping Connections 1
Grooved Pipe Coupling 1
Flange-Connection Adapters 1
Victaulic Gasket Installation 1
Bolt-Tightening Sequence for Water Piping Connections 1
Evaporator Water Box Covers 1
EarthWise Purge Requirements 1
Refrigerant Vent-Line 1
Rupture Disc Vent Installation 1
Unit Insulation Requirements 2

Contents

Figures

Figure 1 – Flow Switch Installation 6
Figure 2 – Typical Evaporator Water Piping Circuit 8
Figure 3 – Typical Condenser Water Piping Circuits 9
Figure 4 – Typical CVHE Grooved Pipe Connection 10
Figure 5 – Customer Piping Alternatives for Water Connections 11
Figure 6 – Typical Shipping Location for Flange 12
Figure 7 – Typical Victaulic Flange Gasket Configuration 13
Figure 8 – Modifying 300 PSIG Flange Adapters for Flat-Faced Flange Application 13
Figure 9 – Bolt Tightening Sequences for Water Piping Flange and Water Boxes 15
Figure 10 – Rupture Disc Location, Cross Section of Rupture Disc and Recommended Rupture Disc Relief Piping 18
Figure 11 – Arrangement for Rupture Disc Relief Piping 19
Figure 12 – Rupture Disc Vent Pipe Sizing 21
Figure 13 – Recommended Areas for Unit Insulation 23

Tables

Table 1 – Evaporator Water Piping Connection Sizes 10
Table 2 – Condenser Water Piping Connection Sizes 10
Table 3 – Water Piping Connection Components 11
Table 4 – Installation Data for 150 PSIG Flange Adapters 13
Table 5 – Installation Data for 350 PSIG Flange Adapters 13
Table 6 – Flange Bolt Torque Recommendations for O-Ring and Flat-Gasket Piping Connections 14
Table 7 – "C" Values Used to Determine Rupture Disc Vent Line Sizes 20
Table 8 – Evaporator Insulation Requirements 22

Water Piping

Overview

Several water piping circuits must be installed and connected to the chiller.

Note: Field Piping must be arranged and supported to avoid stress on the equipment. It is strongly recommended that the piping contractor refrain from piping closer than 3' [.91 m] minimum to the equipment. This will allow for proper fit-up upon arrival of the unit at the job site. Any adjustment that is necessary can be made to the piping at that time.

(a) Pipe the evaporator into the chilled water circuit;

(b) Pipe the condenser into the condenser water circuit;

(c) A heat-recovery condenser water circuit, (optional);

(d) An auxiliary condenser water circuit, (optional)

Piping suggestions for each of the four water circuits listed above are outlined later in this section. General recommendations for the installation of field supplied piping components (e.g., valves, flow switches, etc.) common to most chiller water circuits are listed below.

Water Treatment

Since the use of untreated or improperly treated water in a CenTraVac™ may result in inefficient operation and possible tube damage, be sure to engage the services of a qualified water treatment specialist if needed. A label with the following disclaimer note is affixed to each unit.

Customer Note
The use of improperly treated or untreated water in this equipment may result in scaling, erosion, corrosion, algae or slime. The services of a qualified water treatment specialist should be engaged to determine what treatment, if any, is advisable. The Trane Company warranty specifically excludes liability for corrosion, erosion or deterioration of Trane equipment. Trane assumes no responsibilities for the results of the use of untreated or improperly treat water, or saline or brackish water.

DO NOT USE UNTREATED OR IMPROPERLY TREATED WATER. Failure to do so could result in equipment damage.

Pressure Gauges

Locate pressure gauge taps in a straight run of pipe. Place tap a minimum of one pipe diameter downstream of any elbow, orifice etc. Example, for a 6" [152 mm] pipe, the tap would be at least 6" [152 mm] from any elbow, orifice, etc.

Valves

1. Install field-supplied air vents and drain valves on the water boxes. Each water box is provided with a 3/4" [19 mm] National Pipe Thread Female (NPTF) vent and drain connection.

   Plastic plugs are factory-installed in both openings for shipment; remove and discard these plugs as you install the water box vents and drain valves.

2. If necessary for the application, install pressure-relief valves at the drain connections on the evaporator and condenser water boxes. To do so, add a tee with the relief valve attached to the drain valve.

   To determine whether or not pressure relief valves are needed for a specific application, keep in mind that:

   (a) Vessels with close-coupled shutoff valves may cause high potentially damaging hydrostatic pressures as fluid temperature rises; and,

   (b) Relief valves are required by American Society of Mechanical Engineers (ASME) codes when the shell waterside is ASME. Follow ASME guidelines or other applicable codes to assure proper relief valve installation.

INSTALL PRESSURE-RELIEF VALVES IN THE CONDENSER AND EVAPORATOR WATER CIRCUITS, failure to do may result in shell damage due to hydrostatic expansion.

Strainers

Install a strainer in the entering side of each piping circuit to avoid possible tube plugging in the chiller with debris.

INSTALL STRAINERS IN ALL WATER PIPING ENTERING THE CHILLER, failure to do so may result in tube plugging conditions that could damage unit components.

Water Piping

Required Flow-Sensing Devices

Use either flow switches or differential pressure switches in conjunction with the pump interlocks to verify evaporator and condenser water flows.

To assure adequate chiller protection, wire the chilled-water and condenser-water flow switches in series with the appropriate water pump interlock. Refer to the wiring diagrams that shipped with the unit for specific electrical connections.

Unless stated otherwise, all flow sensing devices must be field supplied. Be sure to follow the manufacturer's recommendations for device selection and installation.

Also, review the general flow switch installation guidelines listed below.

1. Mount the flow switch upright in horizontal section of pipe. Allow at least five pipe diameters of straight, horizontal run on each side of the switch.
2. To assure that the flow switch operates as designed, adjust the length of the flow switch paddle to compensate for the pipe diameter and the height of the coupling tee used to install the switch.
3. Install the flow switch using a coupling that is large enough to allow the insertion of a bushing one pipe diameter larger than the flow switch base (Figure 1). This will prevent interference with the flow switch paddle.
4. Verify that the direction-of-flow arrow on the switch points in the same direction as actual water flow through the piping circuit.
5. Remove all air from the piping circuit to prevent possible flow switch "fluttering."
6. Adjust the flow switch to open when water flow is less than normal.

Figure 1 – Flow Switch Installation

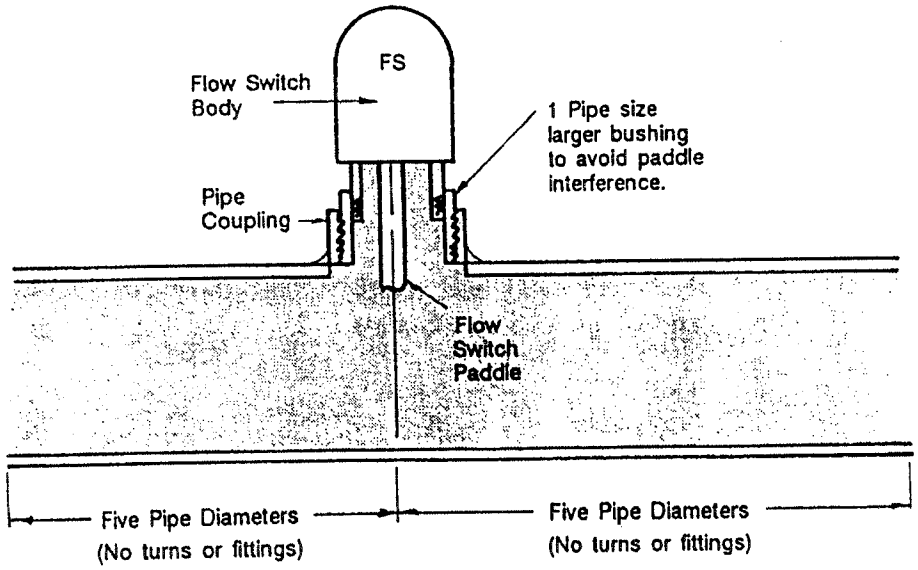

EVAPORATOR AND CONDENSER "PROOF OF FLOW" SWITCHES (EITHER FLOW OR DELTA-P) ARE REQUIRED IN SERIES WITH THE PUMP CONTACTOR AUXILIARY SHOWN ON WIRING DIAGRAMS.

THESE SWITCHES ARE USED WITH CONTROL LOGIC TO CONFIRM FLOW PRIOR TO STARTING A UNIT AND TO STOP A RUNNING UNIT IF FLOW IS LOST. FOR TROUBLE SHOOTING, A VIEWABLE DIAGNOSTIC IS GENERATED IF A "PROOF OF FLOW" SWITCH DOES NOT CLOSE WHEN FLOW IS REQUIRED. Failure to include the condenser "proof of flow" switch and "jumping out" this switch could cause the unit to stop on a secondary level of protection such as high condenser pressure. Frequent cycling on these higher level diagnostic devices could cause excessive thermal and pressure cycling of unit components (O-rings, gaskets, sensors, motors, controls, etc.) resulting in premature failure.

Water Piping

Evaporator and Condenser Water Piping

Figures 2 and 3 illustrate the typical water piping arrangements recommended for the evaporator and condenser.

Note: It is strongly recommended that the piping contractor refrain from piping closer than 3' [.91 m] minimum to the equipment. This will allow for proper fit-up upon arrival of the unit at the job site. Any adjustment that is necessary can be made to the piping at that time.

Water piping connection sizes are identified in Tables 1, 2 and 3. Remember that entering and leaving evaporator water can be piped to either water box connection since the tube bundles are split vertically.

Note: To assure that the evaporator water piping is clear, check it after the chilled water pump is operated but before initial chiller start-up. If any partial blockages exist, they can be detected and removed to prevent possible tube damage resulting from evaporator freeze-up or erosion.

Note: Arrange the condenser water piping so that the water supply enters the shell at the lower connection, and exits from the top connection. Single-pass condenser shells may be piped as desired since both connections are at the same level.

For applications that include an "infinite source" or "multiple-use", cooling condenser water supply, install a valved bypass "leg" (optional) between the supply and return pipes; see Figure 3. This valved bypass allows the operator to short-circuit water flow through the cooling condenser when the supply water temperature is too low.

SYSTEM PRESSURE DIFFERENTIAL MUST BE MAINTAINED ABOVE 5 PSID [34 kPa] AT ALL TIMES. Failure to do so could result in operating problems.

Note: Whenever a CVHE, CVHF and CVHG unit is equipped with an auxiliary condenser, use a bypass valve system to avoid circulating water through the auxiliary shell during unit shutdown.

Water Box Locations

If necessary, the non-marine-style water boxes on each shell whether evaporator or condenser can be switched end-for-end to obtain the desired piping arrangement. Contact Trane LBU Marketing for switching of marine-style boxes.

DO NOT EXCHANGE POSITIONS OF MARINE-STYLE WATER BOXES. Failure to follow this recommendation could alter designed water flow piping configuration and prevent proper unit operation.

To accommodate lifting apparatus, a nut is welded to each evaporator water box to enable attachment of a 3/4" [19 mm] eyebolt (field supplied). Condenser water boxes are provided with 1/2" [13 mm] tapped holes that allow installation of the eyebolt included in the unit's loose parts-box.

If the water boxes on any of the shells are exchanged end-for-end, be sure to reinstall them right side up to maintain the correct baffle arrangements. Use a new gasket with each water box cover.

Water Piping

Figure 2 – Typical Evaporator Water Piping Circuit

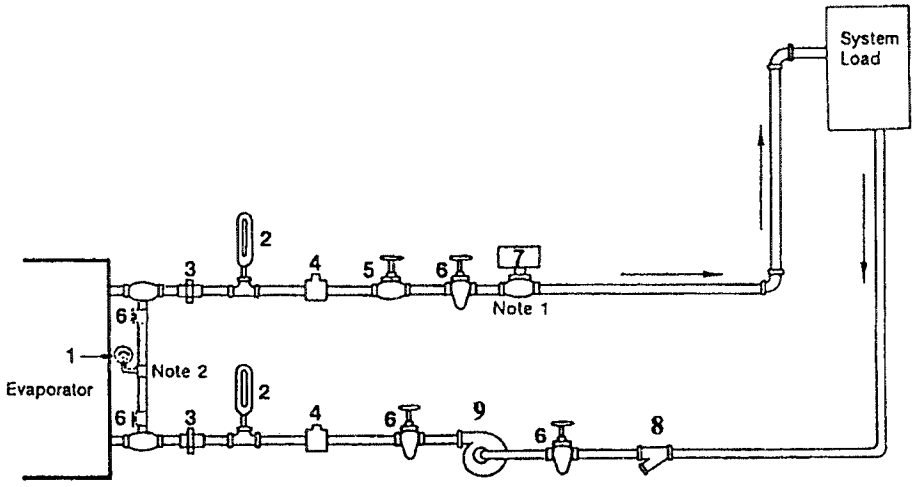

Notes:
1. Flow switch 5S1 (Item 7 in Legend of Components) may be installed in either the entering or leaving leg of the chilled water circuit.
2. It is recommended to pipe the (Item 1) gauge between entering and leaving pipes. A shutoff valve on each side of the gauge allows the operator to read either entering or leaving water pressure.

Legend of Field-Supplied and Installed Components

1. Pressure Gauge
2. Thermometer(s) (If field supplied)
3. Union(s) or Flanged Connection(s)
4. 1/2" [13 mm] NPT Couplings
5. Balancing Valve
6. Gate (Isolation) Valve(s) or Ball Valve(s)
7. Chilled Water Flow Switch (5S1)
8. Strainer
9. Evaporator Water Pump

Water Piping

Figure 3 – Typical Condenser Water Piping Circuits

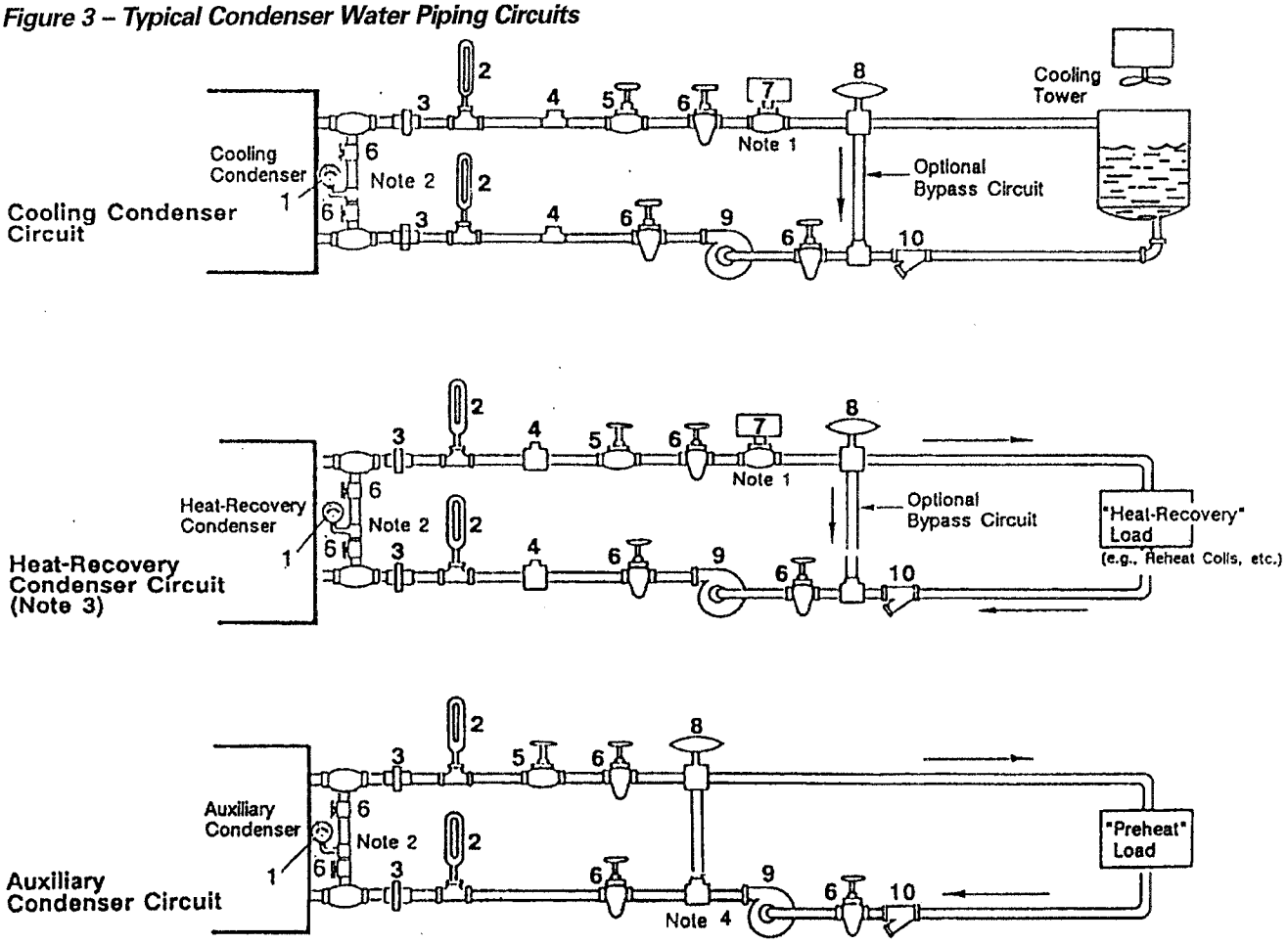

Notes:
1. The Flow Switch 5S2 (Item 7 in Legend of Components) may be installed in either the entering or leaving leg of the chilled water circuit.
2. It is recommended to pipe a single gauge between entering and leaving pipes.
3. Some type of field-supplied temperature control device may be required to regulate the temperature of the heat-recovery condenser water circuit. For application recommendations, see Trane Application Manual, "AM-FND-8", titled "Heat-Recovery Engineering Seminar".
4. Install a bypass valve system to avoid circulating water through the auxiliary shell when the unit is shut down.

Legend of Field-Supplied and Installed Components

1. Pressure Gauge
2. Thermometer(s) (If field supplied)
3. Union(s) or Flanged Connection(s)
4. 1/2" [13 mm] NPT Couplings
5. Balancing Valve
6. Gate (Isolation) Valve(s) or Ball Valve(s)
7. Condenser Water Flow Switch
8. 3-Way Valve (Optional)
9. Condenser Water Pump
10. Strainer

Water Piping

Water Piping Connections

For CVHEs beginning with design sequence "1D," all units (except those with 032 through 050 condenser shells with 150 psig [1035 kPa] non-marine water boxes) use cut-groove end NSP Victaulic style pipe connections. All CVHGs beginning with "1A" and later design sequences. All CVHF units, "A" and later design sequences, use grooved-pipe connections. See Figure 4.

Piping joined using grooved type couplings, like all types of piping systems, requires proper support to carry the weight of pipes and equipment. The support methods used must eliminate undue stresses on joints, piping and other components; allow movement where required, and provide for any other special requirements (i.e., drainage, etc.).

Table 1 – Evaporator Water Piping Connection Sizes

	Nominal Pipe Size (inch/mm)					
	1 Pass		2 Pass		3 Pass	
EVSZ	Inch	mm	Inch	mm	Inch	mm
032	8	219.1	6	168.3	5	141.3
050	10	273.0	8	219.1	6	168.3
080	12	323.4	10	273.0	8	219.1
142	16	406.4	12	323.9	10	273.0
210	16	406.4	14	355.6	12	323.9
250	16	406.4	14	355.6	12	323.9

Note: EVSZ = Evaporator Shell Size; S = Short Shell, L = Long Shell, E = Extended Shell

Table 2 – Condenser Water Piping Connection Sizes

	Nominal Pipe Size (inch/mm)	
	2 Pass	
CDSZ	Inch	mm
032	6	168.3
050	8	219.1
080	10	273.0
142	12	323.9
210	14	355.6
250	14	355.6

Note: CDSZ =Condenser Shell Size; S = Short Shell, L = Long Shell, E = Extended Shell

Figure 4 – Typical CVHE Grooved Pipe Connection

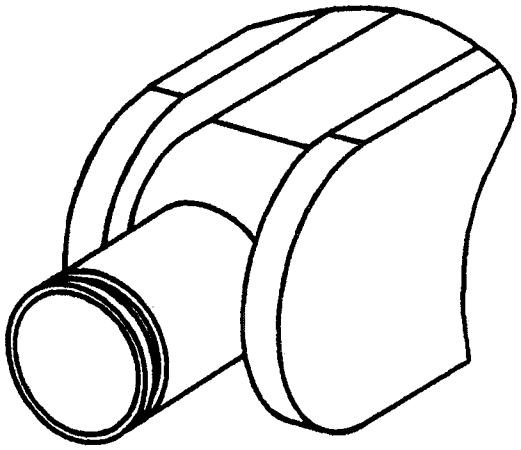

Water Piping

Table 3 – Water Piping Connection Components

		Customer Piping Connection	
Unit Model	Unit Connection Type	Victaulic™	Flanged
CVHE and CVHG	Flanged (Condenser 032-050 150 psig and 1035 kPa non-marine only)	Trane provided Victaulic-to-Flange Adapter	No Adapter Required
CVHE, CVHF and CVHG	Victaulic (All others)	Customer provided Victaulic Coupling	Trane provided Victaulic-to-Flange Adapter

Grooved Pipe Coupling

A customer-supplied, standard flexible grooved pipe coupling (Victaulic Style 77 or equivalent) should be used to complete the Victaulic connection for both 150 psig or 1035 kPa and 300 psig or 2068 kPa water boxes. See Table 3.

When a flexible coupling such as this is installed at the water box connections (Figure 5), other flexible piping connectors (i.e., braided-steel, elastomeric arch, etc.) are usually not required to attenuate vibration and/or prevent stress on the connections.

Note: Flexible coupling gaskets require proper lubrication before installation to provide a good seal. Refer to the coupling manufacturer's guidelines for proper lubricant type and application.

Figure 5 – Customer Piping Alternatives for Water Connections

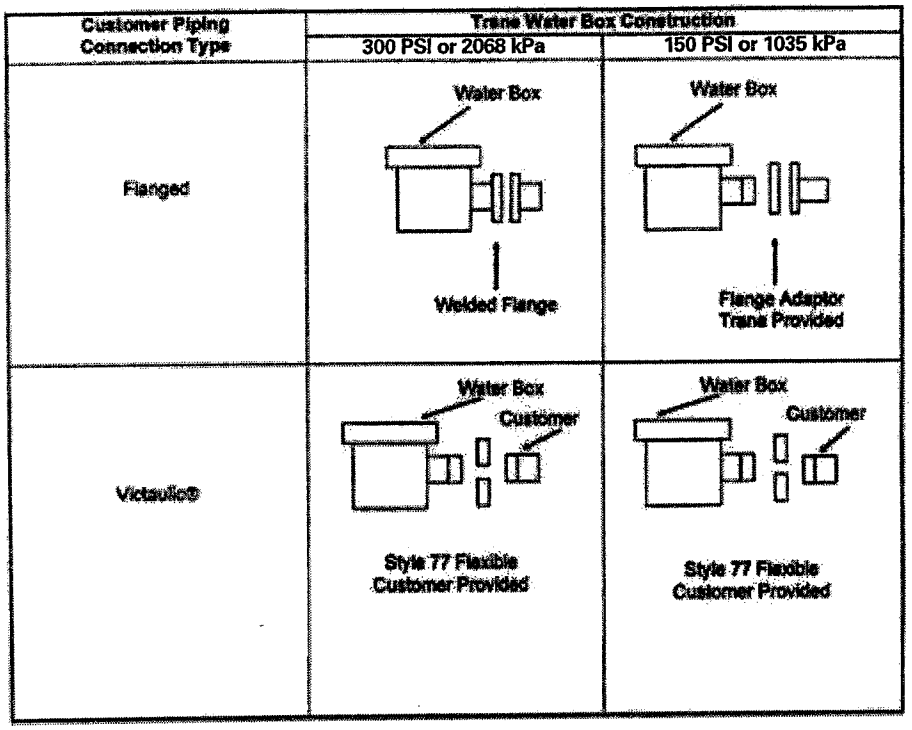

Water Piping

Flange-Connection Adapters

When flat-face flange connections are specified, flange-to-groove adapters are provided (Victaulic™ Style 741 for 150 psig or 1035 kPa systems; Style 743 for 300 psig or 2068 kPa systems). Welded flanged connections are available only as a design special unless ordered as such, flange to groove adapters are provided if flat faced flange connections are specified. The adapters are shipped bolted to one of the chiller end-supports (Figure 6). Adapter weights are given in Tables 1 and 2, The flange adapters provide a direct, rigid connection of flanged components to the grooved-pipe chiller water box connections,

In this case, the use of flexible type connectors (i.e., braided steel, elastomeric arch, etc.) is recommended to attenuate vibration and prevent stress at the water box connections. Flange adapters are not provided for CVHE/F/G units with 300 psig or 2068 kPa water boxes that have 14" [356 mm] or 16" [406 mm] piping connections.

All flange-to-flange assembly bolts must be provided by the installer. Bolt sizes and number required are given in Tables 1 and 2.

The four draw-bolts needed for the 14" [356 mm] and 16" [406 mm] Style 741 (150 psig or 1035 kPa) adapters are provided. The Style 741, 150 psig or 1035 kPa flange adapter requires a smooth, hard surface for a good seal.

Connection to other type flange faces (i.e., raised, serrated, rubber, etc.) will require the use of a flange washer between the faces. Refer to the flange adapter manufacturer's guidelines for specific information.

The Style 743, 300 psig or 2068 kPa flange adapters are designed to mate with raised-face flanges. They can be used with flat-faced flanges, however, if the raised projections on the outside face of the adapter are removed (Figure 8.)

Note: The flange-adapter gasket must be placed with the color-coded lip on the pipe and the other lip facing the mating flange.

GASKET-CONTACT SURFACES OF ADAPTER MUST BE FREE OF GOUGES, UNDULATIONS, OR DEFORMITIES. Failure to do so may not provide an effective seal.

Victaulic Gasket Installation

1. Check gasket and lubricate: Check gasket supplied to be certain it is suited for intended service. Code identifies gasket grade. Apply a thin coat of silicone lubricant to gasket tips and outside of gasket.
2. Install Gasket: Place gasket over pipe end, being sure gasket lip does not overhang pipe end. See Figure 7 for gasket configuration.
3. Join pipe ends: Align and bring two pipe ends together and slide gasket into position centered between the grooves on each pipe. No portion of the gasket should extend into the groove on either pipe.
4. **Apply Vic-Flange™**: Open fully and place hinged flange around the grooved pipe end with the circular key section locating into the groove.
5. Insert bolt: Insert a standard bolt through the mating holes of the Vic-Flange to secure the flange firmly in the groove.
6. Tighten nuts: Tighten nuts alternately and equally until housing bolt pads are firmly together (metal to metal). Excessive nut tightening is not necessary. **Note:** Uneven tightening may cause gasket to pinch.

Figure 6 – Typical Shipping Location for Flange

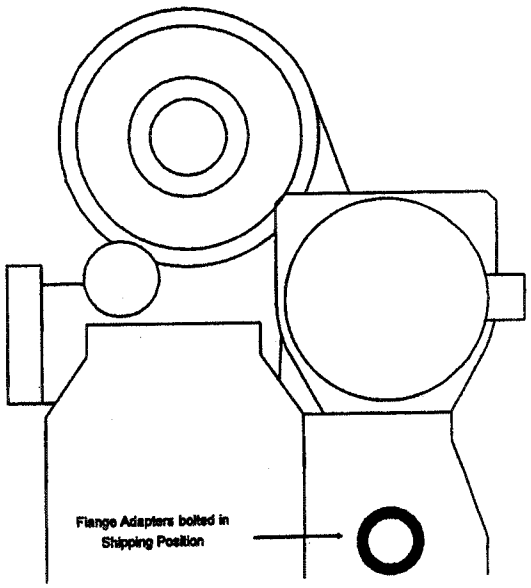

Water Piping

Figure 7 – Typical Victaulic Flange Gasket Configuration

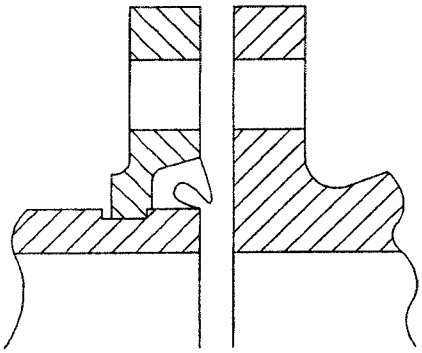

Figure 8 – Modifying 300 PSIG Flange Adaptors for Flat-Faced Flange Application

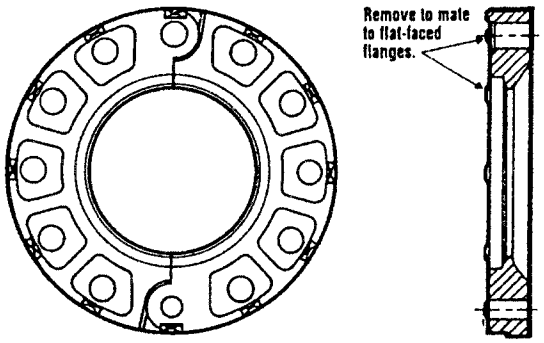

Table 4 – Installation Data for 150 PSIG Flange Adapters (Style 741)

Nominal Pipe Size		Assembly Bolt Size*		Number of Assembly	Bolt Pattern Diameter		Weight	
Inch	mm	Inch	mm	Bolts Required	Inch	mm	Pounds	kg
4	114.3	5/8 x 3	16 x 76	8	7.5	191	7.7	3.5
5	141.3	3/4 x 3-1 /2	19 x 89	8	8.5	216	9.3	4.2
6	168.3	3/4 x 3-1/2	19 x 89	8	9.5	241	10.3	4.7
8	219.1	3/4 x 3-1 /2	19 x 89	8	11.75	298	16.6	7.5
10	273.0	7/8 x 1/4	22 x 6	12	14.25	362	24.2	11.0
12	323.9	7/8 x 1 /4	22 x 6	12	17	432	46.8	21.2
14	355.6	1 x 4-1 /2	25 x 114	12	18.75	476	75	34.0
16	406.4	1 x 4-1 /2	25 x 114	16	21.25	540	90	40.8

Table 5 – Installation Data for 350 PSIG Flange Adapters (Style 743)

Nominal Pipe Size		Assembly Bolt Size*		Number of Assembly	Bolt Pattern Diameter		Weight	
Inch	mm	Inch	mm	Bolts Required	Inch	mm	Pounds	kg
4	114.3	3/4 x 3-3/4	19 x 95	8	7.88	200	15.3	6.9
5	141.3	3/4 x 4	19 x 102	8	9.25	235	17.7	8.0
6	168.3	3/4 x 4-1/2	19 x 114	12	10.63	270	23.4	10.6
8	219.1	3/4 x 4-3/4	19 x 121	12	13	330	34.3	15.6
10	273.0	1 x 5-1 /4	25 x 133	16	15.25	387	48.3	21.9
12	323.9	1-1 /8 x 5-3/4	29 x 146	16	17.75	451	70.5	32.0

*Or equivalent supplied by others.

Water Piping

Bolt-Tightening Sequence for Water Piping Connections

A bolt-tightening sequence for flanges with flat gaskets or O-rings is described below and shown in Figure 9. Remember that improperly tightened flanges may leak.

Note: Before tightening any of the bolts, align the flanges. Flange bolt torque requirements are given in Table 6.

Flanges with 4, 8 or 12 Bolts

See Figure 9. Tighten all bolts to a snug tightness, following the appropriate numerical sequence for the flange. Repeat this sequence to apply the final torque to each bolt.

Flanges with 16, 20 or 24 Bolts

See Figure 9. Following the appropriate numbered sequence, tighten only the first half of the total number of bolts to a snug tightness. Next, sequentially tighten the remaining half of the bolts in the proper order.

Flanges with More than 24 Bolts

Refer to Figure 9 and sequentially tighten the first 12 bolts to a snug tightness. Tighten the next 12 consecutively numbered bolts in sequence, to the final torque.

Then, apply final torque to the first 12 bolts and the bolts not yet tightened (i.e., unnumbered bolts in Figure 9). Be sure to start with bolt "1" and move progressively around the flange in a clockwise direction.

Evaporator Water Box Covers

See Figure 9. Ensure that the water box head rests tightly against the tube sheet; then snugly tighten the 26 bolts in sequential order.

If excessive tube sheet crown prevents the head from contacting the tube sheet, tighten the bolts located where the greatest gaps occur. Be sure to use an equal number of bolt turns from side to side.

Table 6 – Flange Bolt Torque Recommendations for O-Ring and Flat-Gasket Piping Connections

Bolt Size		Gasket Type	
Inch	(mm)	O-Ring	Flat
3/8"	9.5	25 (34)	12-18 (16-24)
1/2"	13	70 (95)	33-50 (45-68)
5/8"	16	150 (203)	70-90 (95-122)
3/4"	19	250 (339)	105-155 (142-210)

Note: Torques provided in Ft/Lbs. (Newton/metres)

Water Piping

Figure 9 – Bolt Tightening Sequences for Water Piping Flanges and Water Boxes

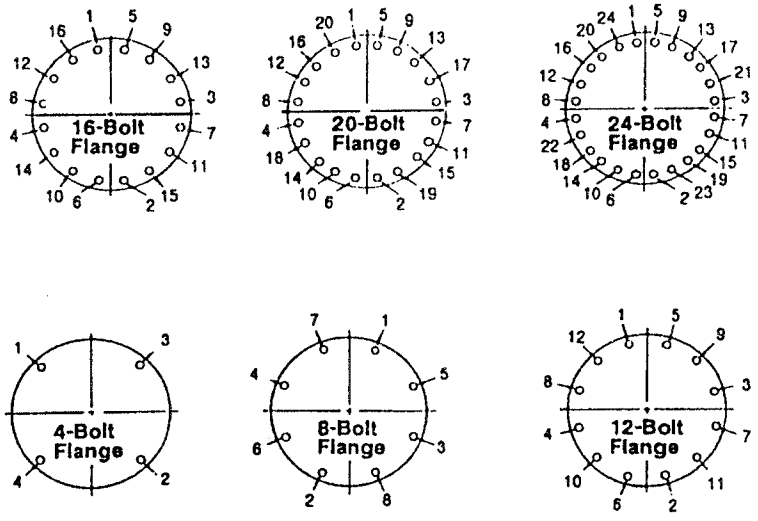

Flanges with more than 24 bolts

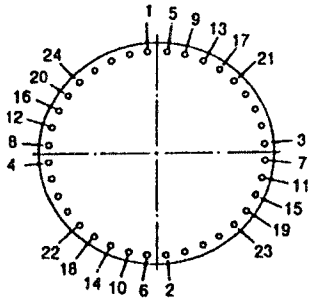

Evaporator Water Box Covers

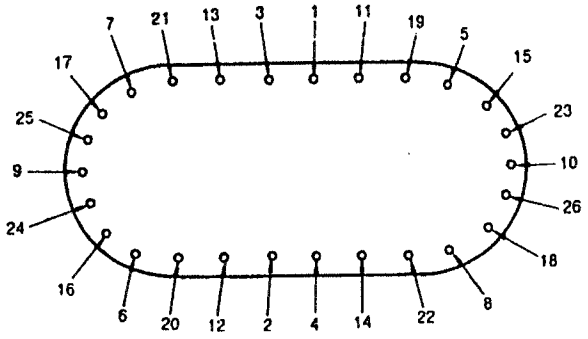

Purge Piping

EarthWise Purge Requirements Purge Installation

For certain CenTraVacs, the purge system is not mounted on the chiller when it ships. For 800-ton heat recovery chillers and 1250 and 1400 ton chillers with auxiliary condensers, the EarthWise Purge is shipped in a separate container that is secured to the chiller shipping skid.

Install the purge system in accordance with the following instructions.

1. Remove purge from its shipping brackets or container.
2. Disconnect purge gas and liquid lines and conduit from shipping bracket that spans purge supports on top of the heating or auxiliary condenser.
3. Remove shipping bracket and screws from purge supports and discard.
4. Locate purge on top of supports (purge base goes outside supports).
5. Secure the purge to the supports with the hardware provided.
6. Using proper brazing techniques as per American Welding society (A.W.S.) braze the following four copper lines at the factory disassembly points:
   - Purge suction line (larger)
   - Purge liquid drain line
   - Regeneration line
   - High pressure cutout switch

   Note: Verify that the high-pressure cutout switch is connected to the line, which proceeds to the chiller condenser. (Check the copper tube routing to verify.)
   - Assure braze joints are leak free
7. Remove purge panel cover and connect the unit wiring per the unit wiring diagrams:
   - Interprocessor communications bus (IPC).
   - Chiller motor temperature sensor wires to motor temperature module.
   - Conduit to control panel and interconnecting wires.
   - After inspection of terminations reassemble purge panel cover.
8. With completion of brazing and electrical connections, the unit valves can be opened for unit operation.

Vent Piping

Refrigerant Vent-Line

General Recommendations
Both the purge and rupture disc vent lines must be routed to outside atmosphere. Use only material compatible with the refrigerant in use. The use of Poly Vinyl Chloride (PVC) (not Chlorinated Poly Vinyl Chloride (CPVC) piping is acceptable if the pipe joint is properly primed and if the adhesive used has been tested for refrigerant compatibility. Testing conducted in Trane laboratories has approved the use of the following materials for PVC pipe construction.

Primer - Hercules, PVC Primer #60-465, RectorSeal PVC Cleaner -Smiling Sam CL3 Adhesive-Hercules, Clear PVC, Medium Body, Medium Set, #60-020 RectorSeal PVC Cement-Green Gene 104.

Consult with the manufacturers of any field-provided components or materials added to the refrigerant-side of the machine for acceptable material compatibility.

During vent line construction, provide a drip leg on the line that is of sufficient length to accommodate a minimum of one gallon of liquid. Provide a standard capped refrigerant service valve to facilitate liquid removal. Accumulated liquid must be drained from the drip leg into an evacuated waste container once every six months, at a minimum, and more often if the purge operates excessively.

Purge Discharge Vent Line

On CVHE, CVHF and CVHG units, the purge discharge is factory-piped downstream of the rupture disc on the unit.

Rupture Disc Vent Installation

All CenTraVac™ chillers are equipped with carbon rupture discs. A cross-section of the rupture disc assembly appears in Figure 10 along with an illustration indicating the location of the rupture disc on the suction elbow.

If refrigerant pressure within the evaporator exceeds 15 psig, the rupture disc breaks, shell pressure is relieved as refrigerant escapes from the chiller.

When constructing the rupture disc vent line, be sure to consult local codes for applicable guidelines and constraints.

Several general recommendations for rupture disc vent line installation are outlined below.

1. Verify that the vacuum support side of the rupture disc is positioned as shown in the cross-section view that appears in Figure 10.

   Note: If the rupture disc was removed for any reason, it must be reinstalled as shown.

2. Do not apply threading torque to the outside pipe assembly when installing the connecting pipe.

Do not apply threading torque to the outside pipe. Failure to do so may damage the rupture disc assembly.

3. Support the vent piping, use a flexible connection to avoid placing stress on the rupture disc. (Stress can alter rupture pressure and cause the disc to break prematurely.)

Vent Piping

The flexible connector used to isolate the rupture disc from excessive vent line vibration must be compatible with the refrigerant in use. Use a flexible, steel connector such as the stainless-steel type (from Vibration Mounting and Control, Inc.) or equivalent.

See Figure 11 for a recommended relief piping arrangement.

Important: Vent pipe size must conform to ANSI and ASHRAE Standard 15, which discusses vent pipe sizing.

Use Table 7 and then Figure 12 to determine proper vent pipe size.

Note: To determine the total "C" value for a specific unit, add the appropriate "C" values for the evaporator, standard condenser and economizer. If the unit is equipped with any options (e.g., heat recovery, free cooling, or an auxiliary condenser), add the applicable "C" value(s) to this total.

With this new sum, refer to Figure 12 to determine the vent line pipe diameter needed to handle flow.

4. Normally, where multiple chillers are used, install a separate rupture disc vent line for each unit.
5. Consult local regulations for any special relief line requirements and refer to Refrigerant Handling Guidelines.
6. The discharge of the vent line outside should not be in the general vicinity of any fresh air intakes to the building. Any gas venting from the vent line should not be allowed to re-enter the building.

Figure 10 – Illustrates Rupture Disc Location, Cross Section of Rupture Disc and Recommended Rupture Disc Relief Piping

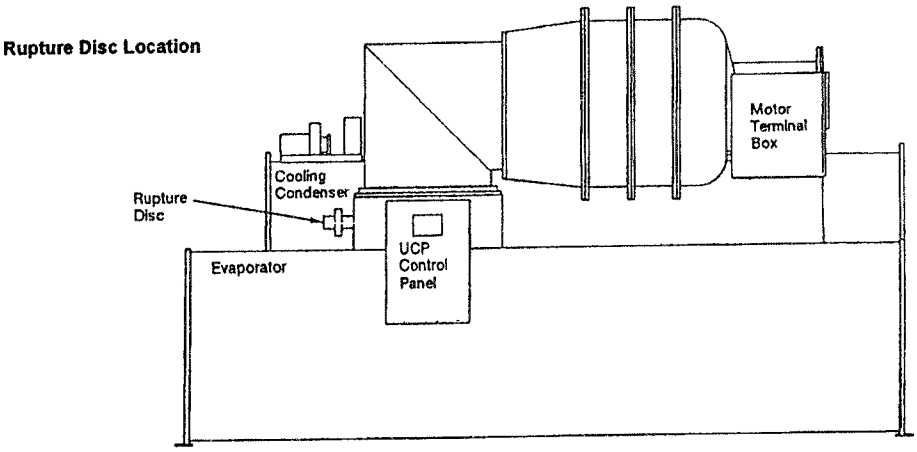

Cross Section of Rupture Disc

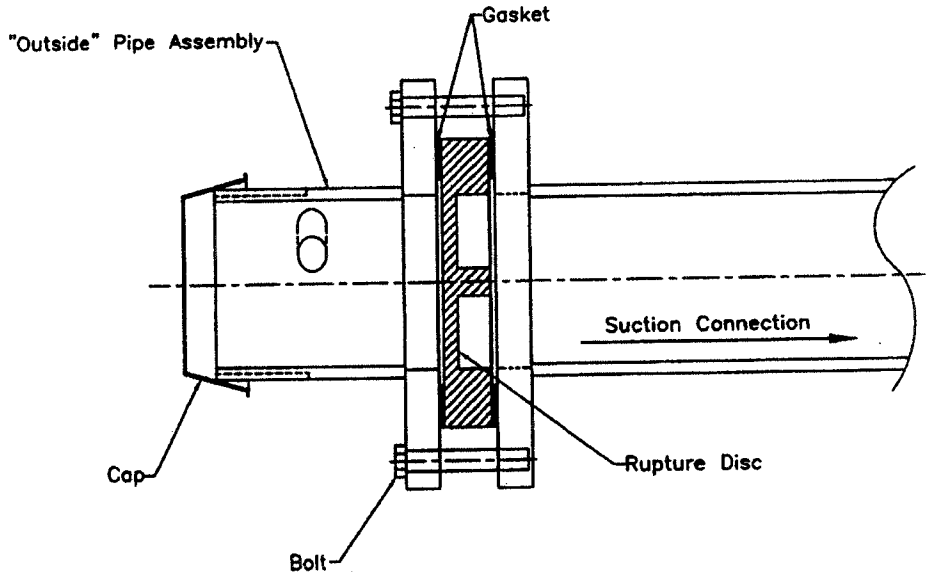

Vent Piping

Figure 11 – Arrangement for Rupture Disc Relief Piping

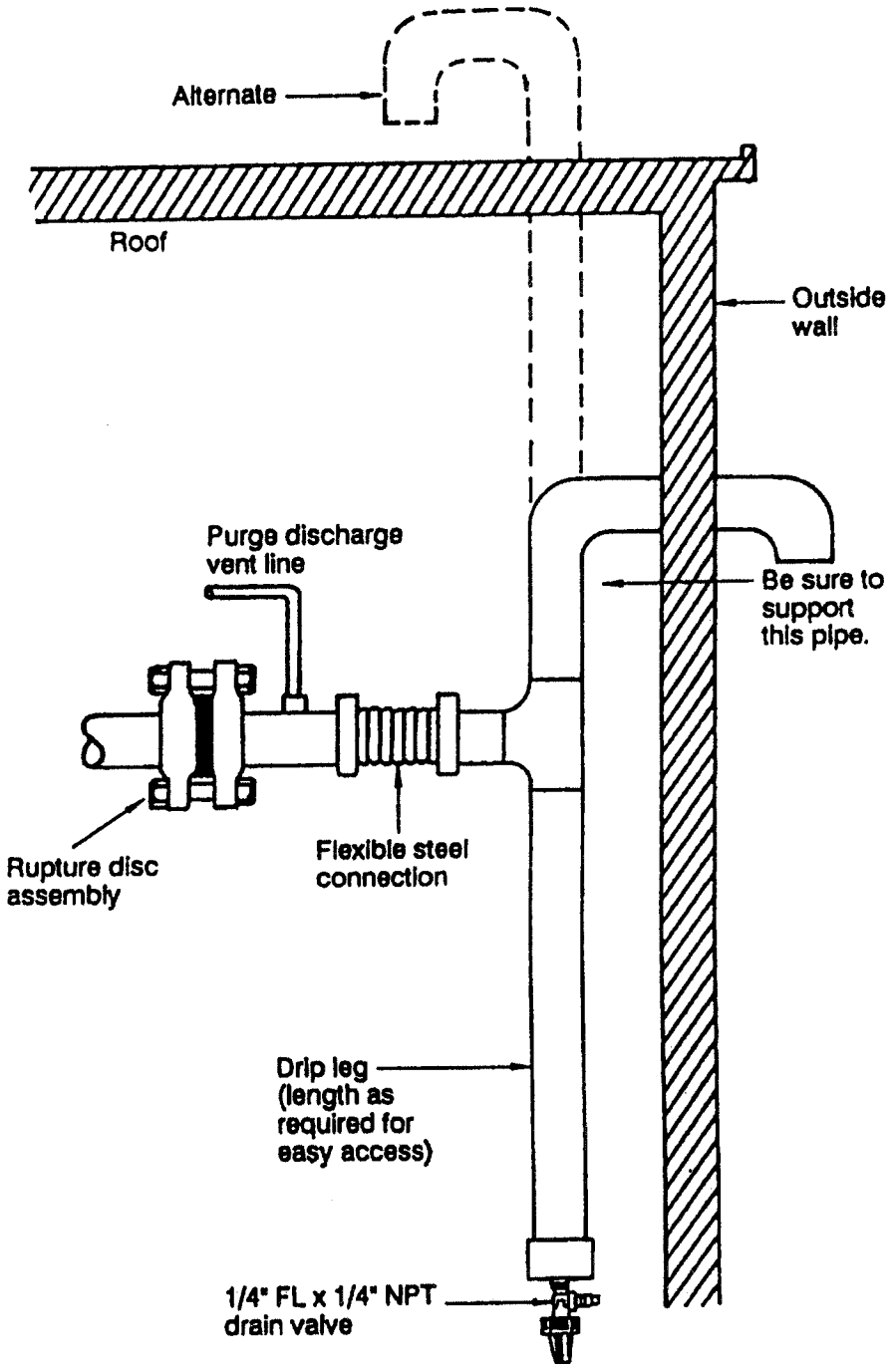

Vent Piping

Table 7 – "C" Values Used to Determine Rupture Disc Vent Line Sizes – CVHE, CVHF and CVHG

Evaporator Size (EVSZ) (3)	Condenser Size (CDSZ) (4)	"C" Values for Unit Components							
		Rupture Disc Diameter	Evaporator	Standard Condenser	Economizer	Short H.R. Condenser	Long H.R. Condenser	Auxiliary Condenser	With Free Cooling
032S	032S	3" (76 mm)	26.25	18.87	4.85	18.87	25.19	15.28	4.16
032S	032L	3" (76 mm)	26.25	25.19					
032L	032L	3" (76 mm)	35.04	25.19					
050S	050S	3" (76 mm)	33.05	23.56	7.44	23.56	31.45	15.28	6.16
050S	050L	3" (76 mm)	33.05	31.45					
050L	050L	3" (76 mm)	44.13	31.45					
080S	080S	3" (76 mm)	45.59	29.06	11.63	29.06	38.80	15.28	5.87
080S	080L	3" (76 mm)	45.59	38.80					
080L	080L	3" (76 mm)	60.86	38.80					
142E	142L	3" (76 mm)	74.30	50.50	17.40	N/A*	Design Special	15.28	Design Special
142M	142L	3" (76 mm)	58.47	50.50			50.50		7.10
142L	142L	3" (76 mm)	68.86	50.50			N/A*		
210L	210L	3" (76 mm)	75.16	56.72			56.72		
250E	250L	3" (76 mm)	93.81	62.12					

Notes:

1. To determine the total "C" value for a specific unit, add the appropriate ""C" values for the evaporator, standard condenser and economizer. If the unit is equipped with any options (e.g., heat recovery, free cooling or an auxiliary condenser, add the applicable "C" values to this total. With this new sum, refer to Figure 12 to determine the vent line pipe diameter.
2. If piping multiple rupture discs (multiple units) to a common vent line, first determine the total "C" value for each unit, and then; add all "C" values together and apply the result to the "vent pipe sizing chart" in Figure 12.
3. EVSZ = Evaporator Shell Size;
   S = Short Shell
   L = Long Shell
   E = Extended Shell
   M = Medium
4. CDSZ = Condenser Shell Size;
   S = Short Shell
   L = Long Shell
   E = Extended Shell

*N/A = Not Available

Vent Piping

Figure 12 – Rupture Disc Vent Pipe Sizing

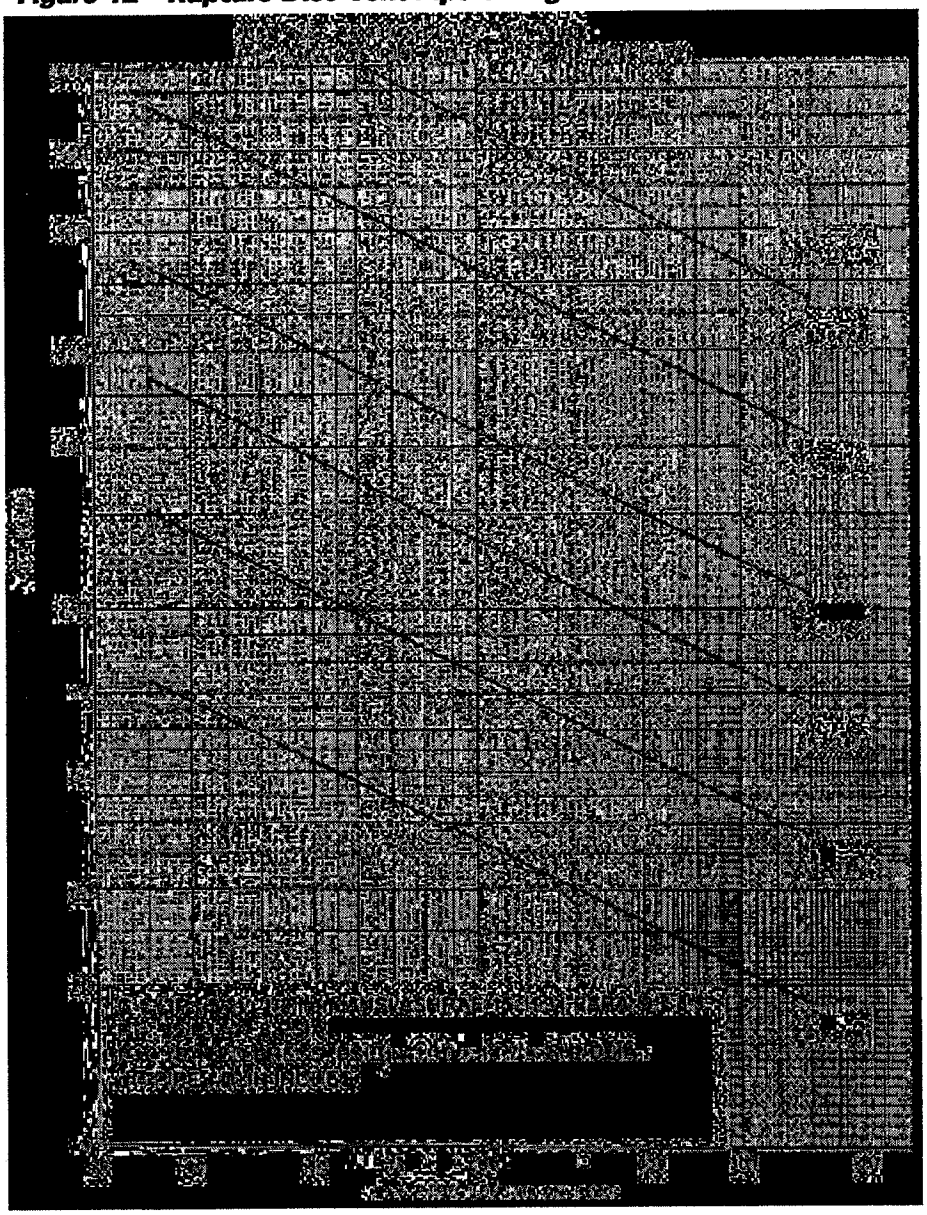

Number of feet x .0348 = Meters

Insulation

Unit Insulation Requirements

Factory-installed insulation is available as an option for all CVHE, CVHF and CVHG units.

In those instances where the chiller is not factory-insulated, install insulation over the areas shaded in Figure 13. It may also be necessary to insulate the compressor suction cover and motor barrel if the unit is installed in an area subjected to high humidities.

Insulate both 1/4" [6.4 mm] eductor lines, one from the suction cover and one from the evaporator to prevent sweating.

The quantities of installation required based on unit size and insulation thickness are listed in Table 8. Insulation thickness is determined at normal design conditions which are:
- 85°
- 75% Relative Humidity

Note: If the unit is not factory-insulated: Install insulation around the evaporator bulbwells; and, ensure that the bulbwells and connections for the water box drains and vents are still accessible after insulation is applied.

Table 8 – CVHE, CVHF and CVHG Evaporator Insulation Requirements

EVSZ (Note 1)	Standard Unit		Free Cooling	
	3/4" [19 mm] Insulation (Note 2) (Square Feet)	3/8" [9.5 mm] Insulation (Note 3) (Square Feet)	3/4" [19 mm] Insulation (Note 2) (Square Feet)	3/8" [9.5 mm] Insulation (Note 3) (Square Feet)
032S	337	52	347	74
032L	365	52	377	74
050S	385	63	398	72
050L	420	63	436	72
080S	505	84	515	97
080L	553	84	566	97
142M	555	98	555	133
142L	578	98	578	133
142E	603	104	629	133
210L	700	98	710	133
210 D	1220	193	Not Available	Not Available
250 D	1308	193	Not Available	Not Available
250 E	770	97	Not Available	Not Available

Notes:
1. EVSZ = Evaporator Shell Size, L = Long Shell, S = Short Shell
2. D = Duplex, M = Medium, E = Extended
3. 3/4" [19 mm] sheet insulation is installed on the evaporator, evaporator water boxes, compressor motor, suction elbow and suction cover as indicated in Figure 13.
4. 3/8" [9.5 mm] sheet insulation is installed on all economizers. All liquid lines and other pipes require the use of 1/2" [13 mm] pipe insulation or 3/8" [9.5 mm] sheet insulation. Copper oil eductor tube lines require pipe insulation.
5. Refrigerant Pump units are NOT insulated on the motor or refrigerant drain lines.

TO PREVENT DAMAGE TO FACTORY-INSTALLED INSULATION, do not allow the insulation to be exposed to excessive sunlight. Failure to do so may damage insulation.

IF THE INSULATION WILL BE PAINTED IN THE FIELD, USE ONLY WATER-BASED LATEX PAINTS. Failure to do so results in damage because thinners and solvents used or other types of paints may cause seams in the insulation to open as a result of shrinkage.

Insulation

Figure 13 – Recommended Area for Unit Insulation

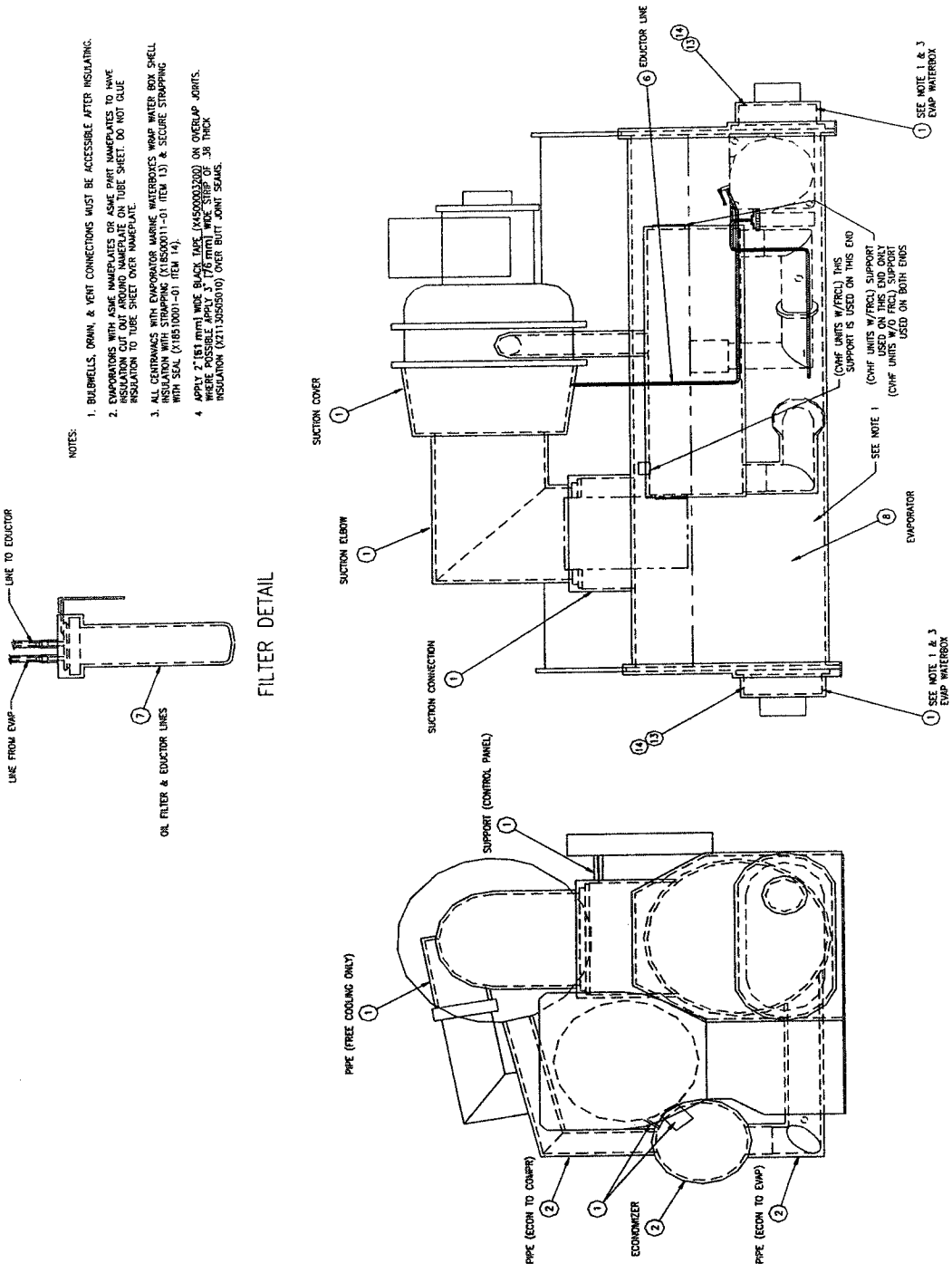

TRANE

The Trane Company
An American Standard Company
www.trane.com

For more information contact your local district office or e-mail us at comfort@trane.com

Literature Order Number	CVHE-SVN02A-EN
File Number	SV-RF-CTV-CVHE-SVN02A-EN-1001
Supersedes	New
Stocking Location	La Crosse

Since The Trane Company has a policy of continuous product and product data improvement, it reserves the right to change design and specifications without notice.

Only qualified technicians should perform the installation and servicing of equipment referred to in this publication.

TRANE

Installation – Piping Information

Water Cooled CenTraVac™ With CH530

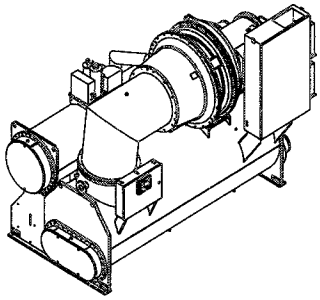
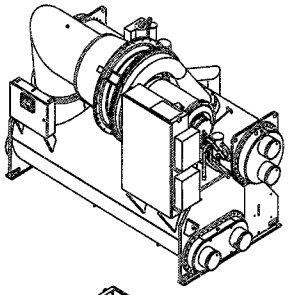
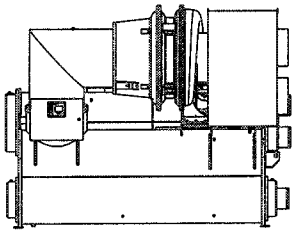
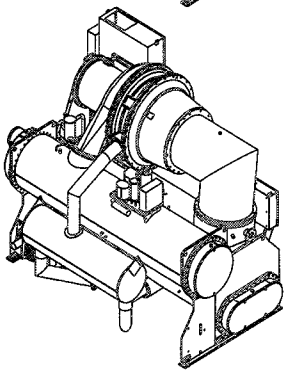
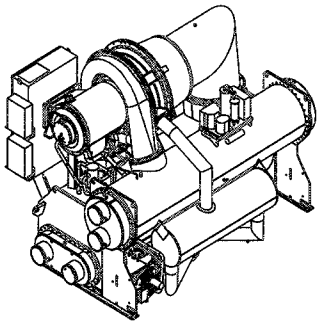
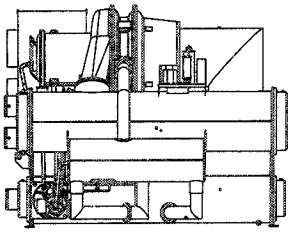

Required Installation Information:
CVHE-SVN01A-EN – General Information
CVHE-SVN02B-EN – Piping Information
CVHE-SVN02C-EN – Electrical Information

X39640646010

CVHE-SVN02B-EN

Warnings and Cautions

NOTICE: Warnings and Cautions appear at appropriate locations throughout this manual. Read these carefully.

⚠ **WARNING:** Indicates a potentially hazardous situation which, if not avoided, could result in death or serious injury.

⚠ **CAUTION:** Indicates a potentially hazardous situation which, if not avoided, may result in minor or moderate injury.

CAUTION: May also be used to alert reader to a situation that could result in equipment or property only damage.

© 2003 American Standard Inc. All rights reserved.

Contents

Warnings and Cautions	2
Overview	5
Water Treatment	5
Pressure Gauges	5
Valves	5
Strainers	5
Flow-Sensing Devices	6
Evaporator and Condenser Water Piping	7
Water Box Locations	9
Water Piping Circuits	10
Water Piping Connections	12
Grooved Pipe Coupling	13
Flange-Connection Adapters	14
Victaulic Gasket Installation	14
Bolt-Tightening Sequence for Water Piping Connections	16
Evaporator Water Box Covers	16
EarthWise Purge Requirements	18
Refrigerant Vent-Line	19
Rupture Disc Vent Installation	19
Unit Insulation Requirements	24

Contents

Figures

Figure 1 – Flow Switch Installation 6
Figure 2 – Standard Waterbox Connections 8
Figure 3 – Typical Evaporator Water Piping Circuit 10
Figure 4 – Typical Condenser Water Piping Circuits 11
Figure 5 – Typical CVHE Grooved Pipe Connection 12
Figure 6 – Customer Piping Alternatives for Water Connections 13
Figure 7 – Typical Shipping Location for Flange 14
Figure 8 – Typical Victaulic Flange Gasket Configuration 15
Figure 9 – Modifying 300 PSIG Flange Adapters for Flat-Faced Flange Application 15
Figure 10 – Bolt Tightening Sequences for Water Piping Flange and Water Boxes 17
Figure 11 – Rupture Disc Location, Cross Section of Rupture Disc and Recommended Rupture Disc Relief Piping 20
Figure 12 – Arrangement for Rupture Disc Relief Piping 21
Figure 13 – Rupture Disc Vent Pipe Sizing 23
Figure 14 – Recommended Areas for Unit Insulation 25

Tables

Table 1 – Evaporator Water Piping Connection Sizes 12
Table 2 – Condenser Water Piping Connection Sizes 12
Table 3 – Water Piping Connection Components 13
Table 4 – Installation Data for 150 PSIG Flange Adapters 15
Table 5 – Installation Data for 350 PSIG Flange Adapters 15
Table 6 – Flange Bolt Torque Recommendations for O-Ring and Flat-Gasket Piping Connections 16
Table 7 – "C" Values Used to Determine Rupture Disc Vent Line Sizes 22
Table 8 – Evaporator Insulation Requirements 24

Water Piping

Overview

Several water piping circuits must be installed and connected to the chiller.

Note: Field Piping must be arranged and supported to avoid stress on the equipment. It is strongly recommended that the piping contractor refrain from piping closer than 3' [.91 m] minimum to the equipment. This will allow for proper fit-up upon arrival of the unit at the job site. Any adjustment that is necessary can be made to the piping at that time.

(a) Pipe the evaporator into the chilled water circuit;

(b) Pipe the condenser into the condenser water circuit;

(c) A heat-recovery condenser water circuit, (optional);

(d) An auxiliary condenser water circuit, (optional)

Piping suggestions for each of the four water circuits listed above are outlined later in this section. General recommendations for the installation of field supplied piping components (e.g., valves, flow switches, etc.) common to most chiller water circuits are listed below.

Water Treatment

Since the use of untreated or improperly treated water in a CenTraVac™ may result in inefficient operation and possible tube damage, be sure to engage the services of a qualified water treatment specialist if needed. A label with the following disclaimer note is affixed to each unit.

Customer Note
The use of improperly treated or untreated water in this equipment may result in scaling, erosion, corrosion, algae or slime. The services of a qualified water treatment specialist should be engaged to determine what treatment, if any, is advisable. The Trane warranty specifically excludes liability for corrosion, erosion or deterioration of Trane equipment. Trane assumes no responsibilities for the results of the use of untreated or improperly treat water, or saline or brackish water.

CAUTION

Proper Water Treatment!

The use of untreated or improperly treated water in a CenTraVac may result in scaling, erosion, corrosion, algae or slime. It is recommended that the services of a qualified water treatment specialist be engaged to determine what water treatment, if any, is required. Trane assumes no responsibility for equipment failures which result from untreated or improperly treated water, or saline or brackish water.

Pressure Gauges

Locate pressure gauge taps in a straight run of pipe. Place tap a minimum of one pipe diameter downstream of any elbow, orifice etc. Example, for a 6" [152 mm] pipe, the tap would be at least 6" [152 mm] from any elbow, orifice, etc.

Valves

1. Install field-supplied air vents and drain valves on the water boxes. Each water box is provided with a 3/4" [19 mm] National Pipe Thread Female (NPTF) vent and drain connection.

   Plastic plugs are factory-installed in both openings for shipment; remove and discard these plugs as you install the water box vents and drain valves.

2. If necessary for the application, install pressure-relief valves at the drain connections on the evaporator and condenser water boxes. To do so, add a tee with the relief valve attached to the drain valve.

   To determine whether or not pressure relief valves are needed for a specific application, keep in mind that:

   (a) Vessels with close-coupled shutoff valves may cause high potentially damaging hydrostatic pressures as fluid temperature rises; and,

   (b) Relief valves are required by American Society of Mechanical Engineers (ASME) codes when the shell waterside is ASME. Follow ASME guidelines or other applicable codes to assure proper relief valve installation.

CAUTION

INSTALL PRESSURE-RELIEF VALVES IN THE CONDENSER AND EVAPORATOR WATER CIRCUITS, failure to do may result in shell damage due to hydrostatic expansion.

Strainers

Install a strainer in the entering side of each piping circuit to avoid possible tube plugging in the chiller with debris.

CAUTION

Use Piping Strainers!

To prevent evaporator or condenser damage, pipe strainers must be installed in the water supplies to protect components from water born debris. Trane is not responsible for equipment-only-damage caused by water born debris.

Water Piping

Required Flow-Sensing Devices

Use either flow switches or differential pressure switches in conjunction with the pump interlocks to verify evaporator and condenser water flows.

To assure adequate chiller protection, wire the chilled-water and condenser-water flow switches in series with the appropriate water pump interlock. Refer to the wiring diagrams that shipped with the unit for specific electrical connections.

Unless stated otherwise, all flow sensing devices must be field supplied. Be sure to follow the manufacturer's recommendations for device selection and installation.

Also, review the general flow switch installation guidelines listed below.

1. Mount the flow switch upright in horizontal section of pipe. Allow at least five pipe diameters of straight, horizontal run on each side of the switch.
2. To assure that the flow switch operates as designed, adjust the length of the flow switch paddle to compensate for the pipe diameter and the height of the coupling tee used to install the switch.
3. Install the flow switch using a coupling that is large enough to allow the insertion of a bushing one pipe diameter larger than the flow switch base (Figure 1). This will prevent interference with the flow switch paddle.
4. Verify that the direction-of-flow arrow on the switch points in the same direction as actual water flow through the piping circuit.
5. Remove all air from the piping circuit to prevent possible flow switch "fluttering."
6. Adjust the flow switch to open when water flow is less than normal.

CAUTION

EVAPORATOR AND CONDENSER "PROOF OF FLOW" SWITCHES (EITHER FLOW OR DELTA-P) ARE REQUIRED IN SERIES WITH THE PUMP CONTACTOR AUXILIARY SHOWN ON WIRING DIAGRAMS. THESE SWITCHES ARE USED WITH CONTROL LOGIC TO CONFIRM FLOW PRIOR TO STARTING A UNIT AND TO STOP A RUNNING UNIT IF FLOW IS LOST. FOR TROUBLE SHOOTING, A VIEWABLE DIAGNOSTIC IS GENERATED IF A "PROOF OF FLOW" SWITCH DOES NOT CLOSE WHEN FLOW IS REQUIRED. Failure to include the condenser "proof of flow" switch and "jumping out" this switch could cause the unit to stop on a secondary level of protection such as high condenser pressure. Frequent cycling on these higher level diagnostic devices could cause excessive thermal and pressure cycling of unit components (O-rings, gaskets, sensors, motors, controls, etc.) resulting in premature failure.

Figure 1. Flow switch installation

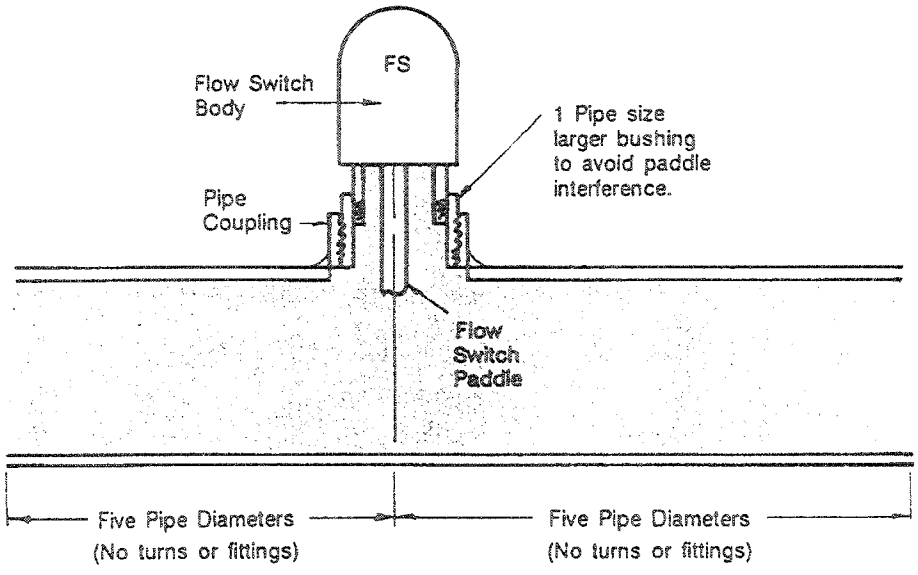

Water Piping

Evaporator and Condenser Water Piping

Figures 3 and 4 illustrate the typical water piping arrangements recommended for the evaporator and condenser.

Note: It is strongly recommended that the piping contractor refrain from piping closer than 3' [.91 m] minimum to the equipment. This will allow for proper fit-up upon arrival of the unit at the job site. Any adjustment that is necessary can be made to the piping at that time. Expenses that result from a failure to follow this recommendation will not be paid by Trane.

Water piping connection sizes are identified in Tables 1, 2 and 3. Remember that entering and leaving evaporator water can be piped to either water box connection since the tube bundles are split vertically.

Note: To assure that the evaporator water piping is clear, check it after the chilled water pump is operated but before initial chiller start-up. If any partial blockages exist, they can be detected and removed to prevent possible tube damage resulting from evaporator freeze-up or erosion.

Note: Arrange the water piping so that the water supply enters the shell at the lower connection, and exits from the top connection. (Operational problems may result if this is not obeyed) Some shells may be piped as desired since both connections are at the same level. Ref. Fig. 2.

Water Piping

Figure 2. Standard waterbox connections

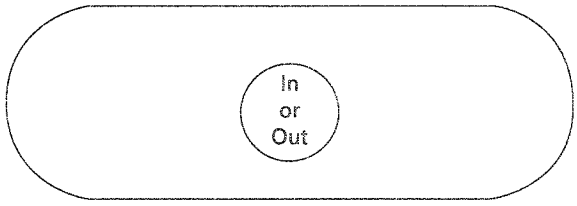

Typical Single Pass Evaporator

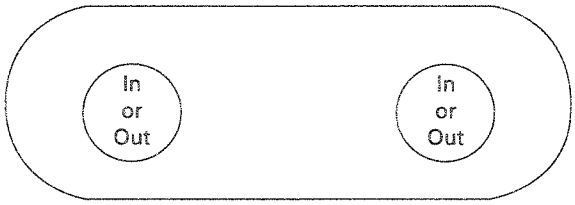

Standard Two Pass Evaporator

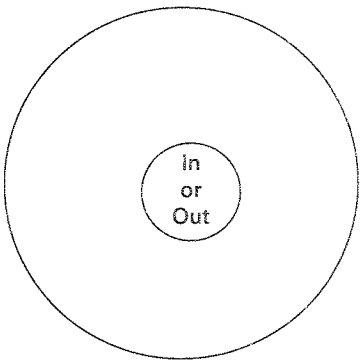

Standard Single Pass Condenser



Large Two Pass Evaporator

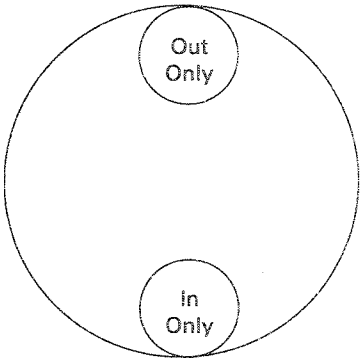

Standard Two Pass Condenser

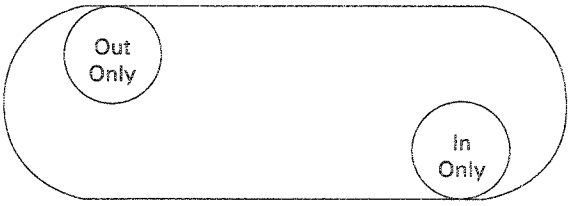

Large Two Pass Evaporator

Water Piping

For applications that include an "infinite source" or "multiple-use", cooling condenser water supply, install a valved bypass "leg" (optional) between the supply and return pipes; see Figure 4. This valved bypass allows the operator to short-circuit water flow through the cooling condenser when the supply water temperature is too low.

See "Condenser Water Temperature Control for CenTraVac® Centrifugal Chiller Systems" Engineering Bulletin (CTV-PRB006-EN) for additional application information.

CAUTION

SYSTEM PRESSURE DIFFERENTIAL MUST BE MAINTAINED ABOVE 5 PSID [34 kPa] AT ALL TIMES. Failure to do so could result in operating problems.

Note: Whenever a CVHE, CVHF and CVHG unit is equipped with an auxiliary condenser, use a bypass valve system to avoid circulating water through the auxiliary shell during unit shutdown.

Water Box Locations

If necessary, the non-marine-style water boxes on each shell whether evaporator or condenser can be switched end-for-end to obtain the desired piping arrangement. Contact Trane LBU Marketing for switching of marine-style boxes.

CAUTION

DO NOT EXCHANGE POSITIONS OF MARINE-STYLE WATER BOXES. Failure to follow this recommendation could alter designed water flow piping configuration and prevent proper unit operation.

To accommodate lifting apparatus, a nut is welded to each evaporator water box to enable attachment of a 3/4" [19 mm] eyebolt (field supplied). Condenser water boxes are provided with 1/2" [13 mm] tapped holes that allow installation of the eyebolt included in the unit's loose parts-box.

If the water boxes on any of the shells are exchanged end-for-end, be sure to reinstall them right side up to maintain the correct baffle arrangements. Use a new gasket with each water box cover.

Water Piping

Figure 3. Typical evaporator water piping circuit

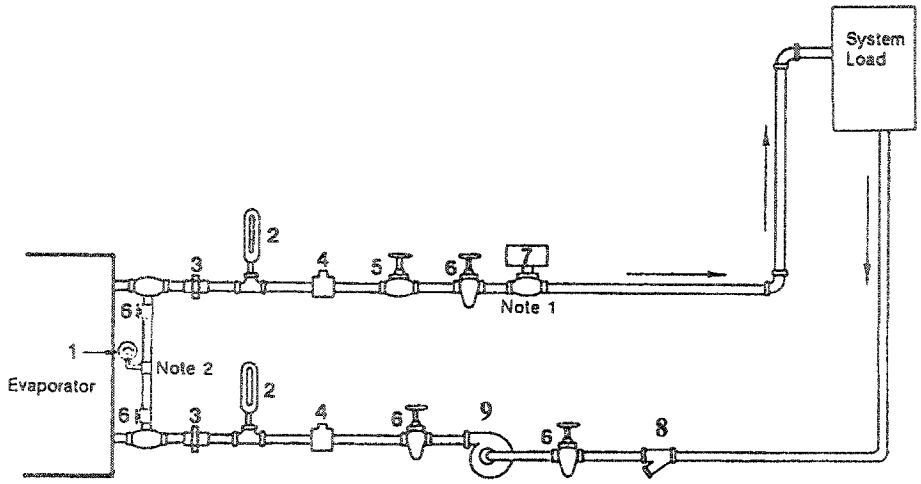

Notes:
1. Flow switch 5S1 (Item 7 in Legend of Components) may be installed in either the entering or leaving leg of the chilled water circuit.
2. It is recommended to pipe the (Item 1) gauge between entering and leaving pipes. A shutoff valve on each side of the gauge allows the operator to read either entering or leaving water pressure.

Legend of Field-Supplied and Installed Components

1. Pressure Gauge
2. Thermometer(s) (If field supplied)
3. Union(s) or Flanged Connection(s)
4. 1/2" [13 mm] NPT Couplings
5. Balancing Valve
6. Gate (Isolation) Valve(s) or Ball Valve(s)
7. Chilled Water Flow Switch (5S1)
8. Strainer
9. Evaporator Water Pump

Water Piping

Figure 4. Typical condenser water piping circuits

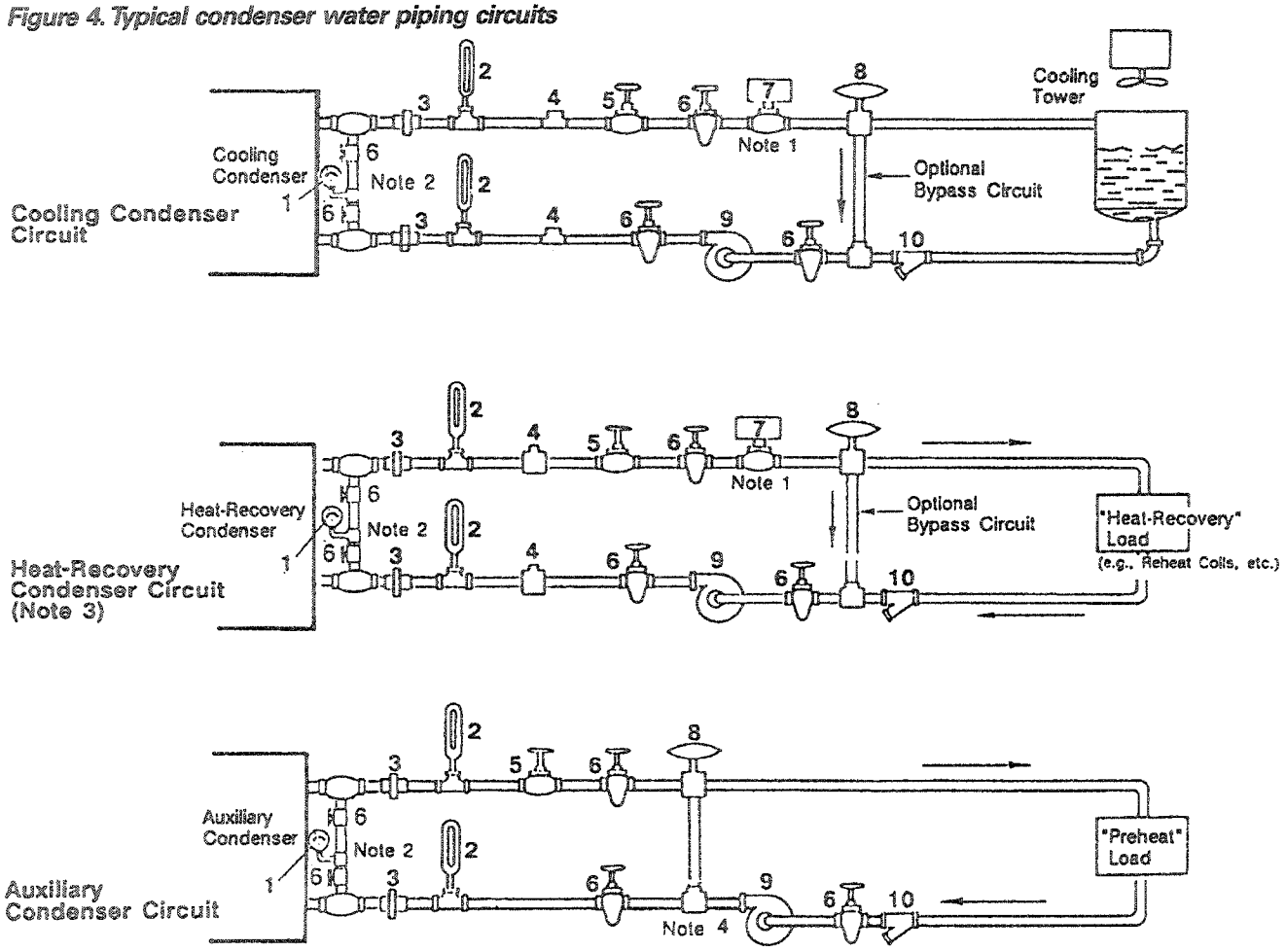

Notes:
1. The Flow Switch 5S2 (Item 7 in Legend of Components) may be installed in either the entering or leaving leg of the chilled water circuit.
2. It is recommended to pipe a single gauge between entering and leaving pipes.
3. Some type of field-supplied temperature control device may be required to regulate the temperature of the heat-recovery condenser water circuit. For application recommendations, see Trane Application Manual, "AM-FND-8," titled "Heat-Recovery Engineering Seminar."
4. Install a bypass valve system to avoid circulating water through the auxiliary shell when the unit is shut down.
5. On multiple pass condensers, entering condenser water must enter at the lowest nozzle.

Legend of Field-Supplied and Installed Components

1. Pressure Gauge
2. Thermometer(s) (If field supplied)
3. Union(s) or Flanged Connection(s)
4. 1/2" [13 mm] NPT Couplings
5. Balancing Valve
6. Gate (Isolation) Valve(s) or Ball Valve(s)
7. Condenser Water Flow Switch
8. 3-Way Valve (Optional)
9. Condenser Water Pump
10. Strainer

Water Piping

Water Piping Connections

For CVHEs beginning with design sequence "1D," all units (except those with 032 through 050 condenser shells with 150 psig [1035 kPa] non-marine water boxes) use cut-groove end NSP Victaulic style pipe connections. All CVHGs beginning with "1A" and later design sequences. All CVHF units, "A" and later design sequences, use grooved-pipe connections. See Figure 5.

Piping joined using grooved type couplings, like all types of piping systems, requires proper support to carry the weight of pipes and equipment. The support methods used must eliminate undue stresses on joints, piping and other components; allow movement where required, and provide for any other special requirements (i.e., drainage, etc.).

Table 1. Evaporator water piping connection sizes

	Nominal Pipe Size (inch/mm)					
	1 Pass		2 Pass		3 Pass	
EVSZ	Inch	mm	Inch	mm	Inch	mm
032	8	219.1	6	168.3	5	141.3
050	10	273.0	8	219.1	6	168.3
080	12	323.4	10	273.0	8	219.1
142	16	406.4	12	323.9	10	273.0
210	16	406.4	14	355.6	12	323.9
250	16	406.4	14	355.6	12	323.9

Note: EVSZ = Evaporator Shell Size; S = Short Shell, L = Long Shell, E = Extended Shell

Table 2. Condenser water piping connection sizes

	Nominal Pipe Size (inch/mm)	
	2 Pass	
CDSZ	Inch	mm
032	6	168.3
050	8	219.1
080	10	273.0
142	12	323.9
210	14	355.6
250	14	355.6

Note: CDSZ =Condenser Shell Size; S = Short Shell, L = Long Shell, E = Extended Shell

Figure 5. Typical CVHE grooved pipe connection

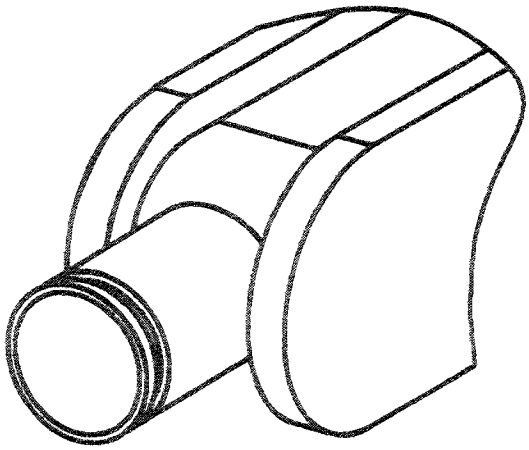

Water Piping

Table 3. Water piping connection components

		Customer Piping Connection	
Unit Model	Unit Connection Type	Victualic™	Flanged
CVHE and CVHG	Flanged (Condenser 032-050 150 psig and 1035 kPa non-marine only)	Trane provided Victaulic-to-Flange Adapter	No Adapter Required
CVHE, CVHF and CVHG	Victaulic (All others)	Customer provided Victaulic Coupling	Trane provided Victaulic-to-Flange Adapter

Grooved Pipe Coupling

A customer-supplied, standard flexible grooved pipe coupling (Victaulic Style 77 or equivalent) should be used to complete the Victaulic connection for both 150 psig or 1035 kPa and 300 psig or 2068 kPa water boxes. See Table 3.

When a flexible coupling such as this is installed at the water box connections (Figure 6), other flexible piping connectors (i.e., braided-steel, elastomeric arch, etc.) are usually not required to attenuate vibration and/or prevent stress on the connections.

Note: Flexible coupling gaskets require proper lubrication before installation to provide a good seal. Refer to the coupling manufacturer's guidelines for proper lubricant type and application.

Figure 6. Customer piping alternatives for water connections

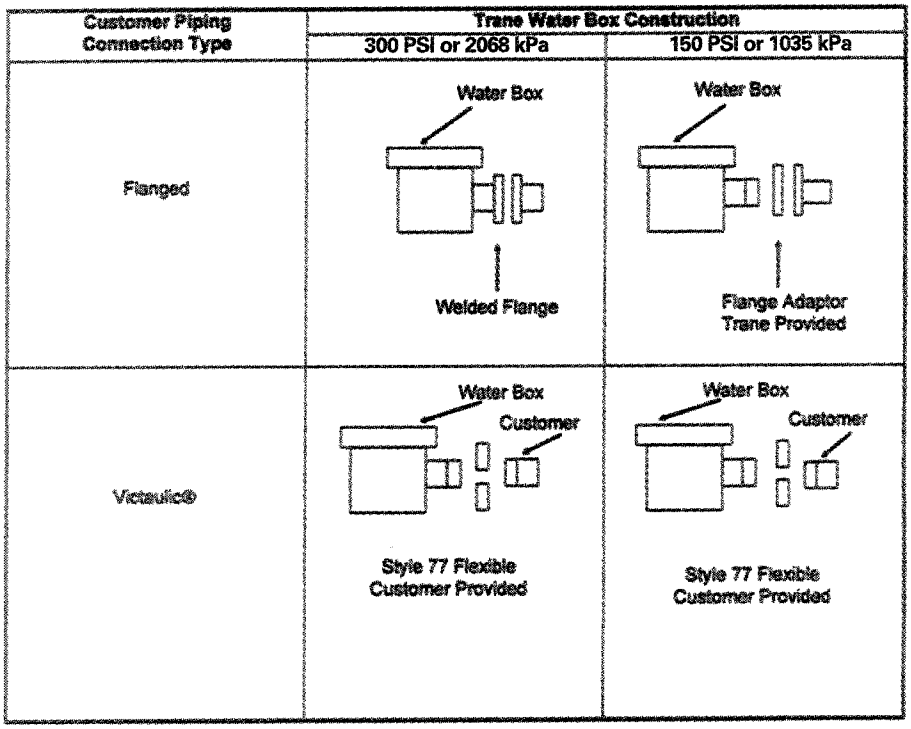

Water Piping

Flange-Connection Adapters

When flat-face flange connections are specified, flange-to-groove adapters are provided (Victaulic™ Style 741 for 150 psig or 1035 kPa systems; Style 743 for 300 psig or 2068 kPa systems). Welded flanged connections are available only as a design special unless ordered as such, flange to groove adapters are provided if flat faced flange connections are specified. The adapters are shipped bolted to one of the chiller end-supports (Figure 7). Adapter weights are given in Tables 1 and 2, The flange adapters provide a direct, rigid connection of flanged components to the grooved-pipe chiller water box connections.

In this case, the use of flexible type connectors (i.e., braided steel, elastomeric arch, etc.) are recommended to attenuate vibration and prevent stress at the water box connections. Flange adapters are not provided for CVHE/F/G units with 300 psig or 2068 kPa water boxes that have 14" [356 mm] or 16" [406 mm] piping connections.

All flange-to-flange assembly bolts must be provided by the installer. Bolt sizes and number required are given in Tables 1 and 2.

The four draw-bolts needed for the 14" [356 mm] and 16" [406 mm] Style 741 (150 psig or 1035 kPa) adapters are provided. The Style 741, 150 psig or 1035 kPa flange adapter requires a smooth, hard surface for a good seal.

Connection to other type flange faces (i.e., raised, serrated, rubber, etc.) will require the use of a flange washer between the faces. Refer to the flange adapter manufacturer's guidelines for specific information.

The Style 743, 300 psig or 2068 kPa flange adapters are designed to mate with raised-face flanges. They can be used with flat-faced flanges, however, if the raised projections on the outside face of the adapter are removed (Figure 9.)

Note: The flange-adapter gasket must be placed with the color-coded lip on the pipe and the other lip facing the mating flange.

CAUTION

GASKET-CONTACT SURFACES OF ADAPTER MUST BE FREE OF GOUGES, UNDULATIONS, OR DEFORMITIES. Failure to do so may not provide an effective seal.

Victaulic Gasket Installation

1. Check gasket and lubricate: Check gasket supplied to be certain it is suited for intended service. Code identifies gasket grade. Apply a thin coat of silicone lubricant to gasket tips and outside of gasket.
2. Install Gasket: Place gasket over pipe end, being sure gasket lip does not overhang pipe end. See Figure 8 for gasket configuration.
3. Join pipe ends: Align and bring two pipe ends together and slide gasket into position centered between the grooves on each pipe. No portion of the gasket should extend into the groove on either pipe.
4. **Apply Vic-Flange™**: Open fully and place hinged flange around the grooved pipe end with the circular key section locating into the groove.
5. Insert bolt: Insert a standard bolt through the mating holes of the Vic-Flange to secure the flange firmly in the groove.
6. Tighten nuts: Tighten nuts alternately and equally until housing bolt pads are firmly together (metal to metal). Excessive nut tightening is not necessary. **Note:** Uneven tightening may cause gasket to pinch.

Figure 7. Typical shipping location for flange

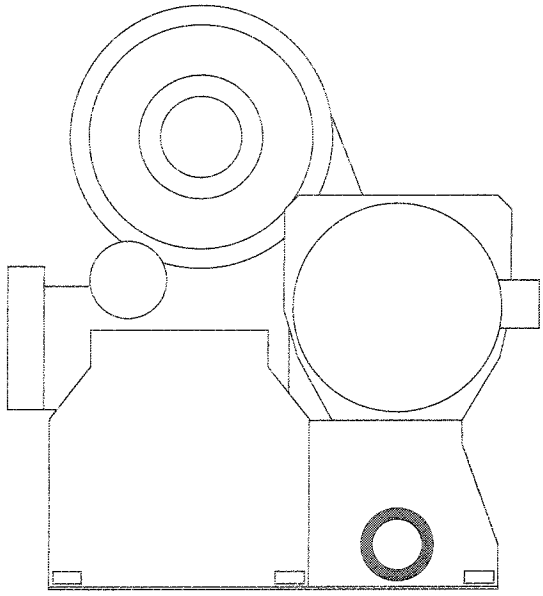

Water Piping

Figure 8. Typical victaulic flange gasket configuration

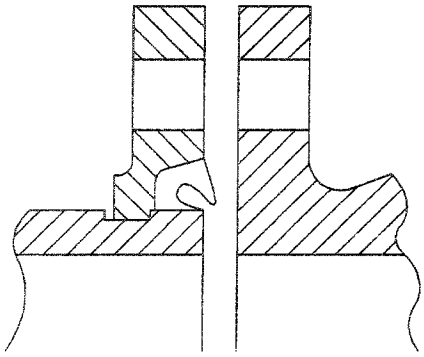

Figure 9. Modifying 300 PSIG flange adaptors for flat-faced flange application

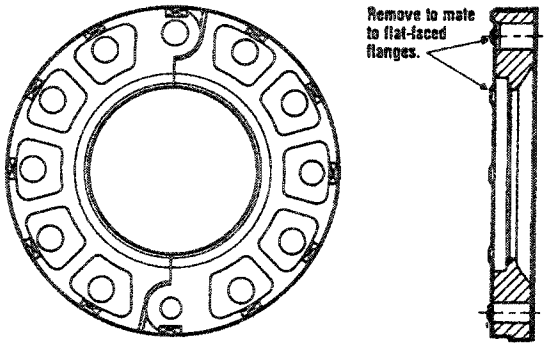

Table 4. Installation data for 150 PSIG flange adapters (Style 741)

Nominal Pipe Size		Assembly Bolt Size*		Number of Assembly	Bolt Pattern Diameter		Weight	
Inch	mm	Inch	mm	Bolts Required	Inch	mm	Pounds	kg
4	114.3	5/8 x 3	16 x 76	8	7.5	191	7.7	3.5
5	141.3	3/4 x 3-1 /2	19 x 89	8	8.5	216	9.3	4.2
6	168.3	3/4 x 3-1/2	19 x 89	8	9.5	241	10.3	4.7
8	219.1	3/4 x 3-1 /2	19 x 89	8	11.75	298	16.6	7.5
10	273.0	7/8 x 1/4	22 x 6	12	14.25	362	24.2	11.0
12	323.9	7/8 x 1 /4	22 x 6	12	17	432	46.8	21.2
14	355.6	1 x 4-1 /2	25 x 114	12	18.75	476	75	34.0
16	406.4	1 x 4-1 /2	25 x 114	16	21.25	540	90	40.8

Table 5. Installation data for 350 PSIG flange adapters (Style 743)

Nominal Pipe Size		Assembly Bolt Size*		Number of Assembly	Bolt Pattern Diameter		Weight	
Inch	mm	Inch	mm	Bolts Required	Inch	mm	Pounds	kg
4	114.3	3/4 x 3-3/4	19 x 95	8	7.88	200	15.3	6.9
5	141.3	3/4 x 4	19 x 102	8	9.25	235	17.7	8.0
6	168.3	3/4 x 4-1/2	19 x 114	12	10.63	270	23.4	10.6
8	219.1	3/4 x 4-3/4	19 x 121	12	13	330	34.3	15.6
10	273.0	1 x 5-1 /4	25 x 133	16	15.25	387	48.3	21.9
12	323.9	1-1 /8 x 5-3/4	29 x 146	16	17.75	451	70.5	32.0

*Or equivalent supplied by others.

Water Piping

Bolt-Tightening Sequence for Water Piping Connections

A bolt-tightening sequence for flanges with flat gaskets or O-rings is described below and shown in Figure 10. Remember that improperly tightened flanges may leak.

Note: Before tightening any of the bolts, align the flanges. Flange bolt torque requirements are given in Table 6.

Flanges with 4, 8 or 12 Bolts

See Figure 10. Tighten all bolts to a snug tightness, following the appropriate numerical sequence for the flange. Repeat this sequence to apply the final torque to each bolt.

Flanges with 16, 20 or 24 Bolts

See Figure 10. Following the appropriate numbered sequence, tighten only the first half of the total number of bolts to a snug tightness. Next, sequentially tighten the remaining half of the bolts in the proper order.

Flanges with More than 24 Bolts

Refer to Figure 10 and sequentially tighten the first 12 bolts to a snug tightness. Tighten the next 12 consecutively numbered bolts in sequence, to the final torque.

Then, apply final torque to the first 12 bolts and the bolts not yet tightened (i.e., unnumbered bolts in Figure 10). Be sure to start with bolt "1" and move progressively around the flange in a clockwise direction.

Evaporator Water Box Covers

See Figure 10. Ensure that the water box head rests tightly against the tube sheet; then snugly tighten the 26 bolts in sequential order.

If excessive tube sheet crown prevents the head from contacting the tube sheet, tighten the bolts located where the greatest gaps occur. Be sure to use an equal number of bolt turns from side to side.

Pressure Testing Waterside Piping

Water side design pressure is either 150 or 300 Psig

⚠ WARNING

Do not over pressurize the system or exceed design pressure. Over pressurization can result in equipment damage. Always perform as a hydro pressure test with water present in piping and water boxes.

Table 6. Flange bolt torque recommendations for o-ring and flat-gasket piping connections

Bolt Size		Gasket Type	
Inch	(mm)	O-Ring	Flat
3/8"	9.5	25 (34)	12-18 (16-24)
1 /2"	13	70 (95)	33-50 (45-68)
5/8"	16	150 (203)	70-90 (95-122)
3/4"	19	250 (339)	105-155 (142-210)

Note: Torques provided in Ft/Lbs. (Newton/metres) Bolt size is determined by the diameter of bolt shank.

Water Piping

Figure 10. Bolt rightening sequences for water piping flanges and water boxes

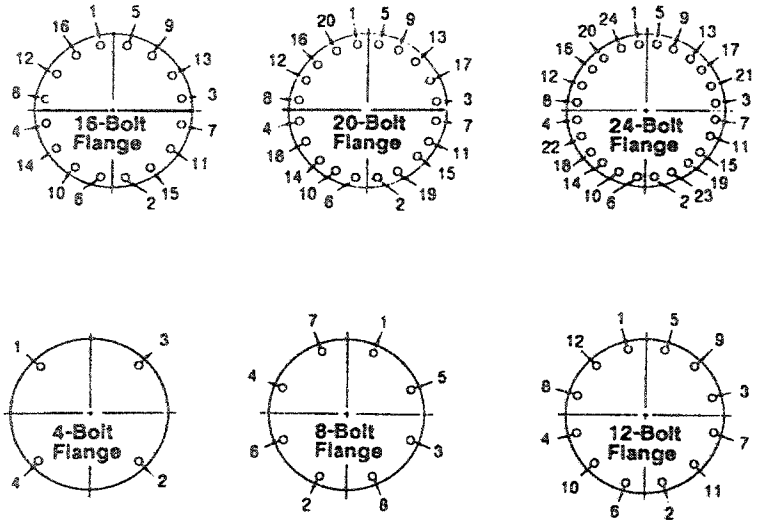

Flanges with more than 24 bolts

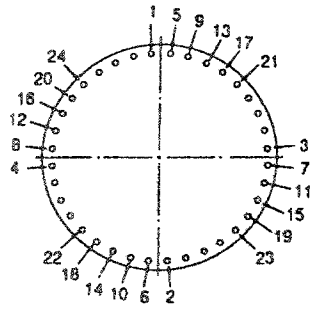

Evaporator Water Box Covers

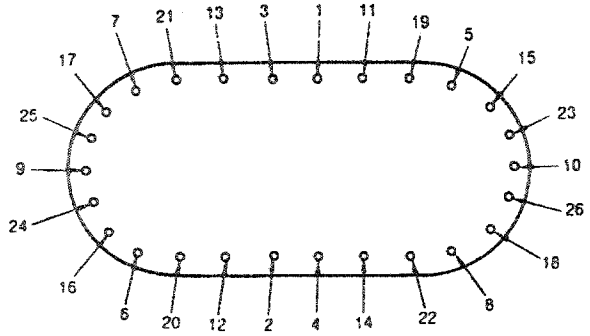

Purge Piping

EarthWise Purge Requirements Purge Installation

For certain CenTraVacs, the purge system is not mounted on the chiller when it ships. For 800-ton heat recovery chillers and 1250 and 1400 ton chillers with auxiliary condensers, the EarthWise Purge is shipped in a separate container that is secured to the chiller shipping skid.

Install the purge system in accordance with the following instructions.

1. Remove purge from its shipping brackets or container.
2. Disconnect purge gas and liquid lines and conduit from shipping bracket that spans purge supports on top of the heating or auxiliary condenser.
3. Remove shipping bracket and screws from purge supports and discard.
4. Locate purge on top of supports (purge base goes outside supports).
5. Secure the purge to the supports with the hardware provided.
6. Using proper brazing techniques as per American Welding society (A.W.S.) braze the following four copper lines at the factory disassembly points:
   - Purge suction line (larger)
   - Purge liquid drain line
   - Regeneration line
   - High pressure cutout switch

   Note: Verify that the high-pressure cutout switch is connected to the line, which proceeds to the chiller condenser. (Check the copper tube routing to verify.)
   - Assure braze joints are leak free
7. Remove purge panel cover and connect the unit wiring per the unit wiring diagrams:
   - Interprocessor communications bus (IPC).
   - Chiller motor temperature sensor wires to motor temperature module.
   - Conduit to control panel and interconnecting wires.
   - After inspection of terminations reassemble purge panel cover.
8. With completion of brazing and electrical connections, the unit valves can be opened for unit operation.

Vent Piping

Refrigerant Vent-Line

General Recommendations

Both the purge and rupture disc vent lines must be routed to outside atmosphere. Use only material compatible with the refrigerant in use. The use of Poly Vinyl Chloride (PVC) (not Chlorinated Poly Vinyl Chloride (CPVC) piping is acceptable if the pipe joint is properly primed and if the adhesive used has been tested for refrigerant compatibility. Testing conducted in Trane laboratories has approved the use of the following materials for PVC pipe construction.

Primer - Hercules, PVC Primer #60-465, RectorSeal PVC Cleaner -Smiling Sam CL3 Adhesive-Hercules, Clear PVC, Medium Body, Medium Set, #60-020 RectorSeal PVC Cement-Green Gene 104.

Consult with the manufacturers of any field-provided components or materials added to the refrigerant-side of the machine for acceptable material compatibility.

During vent line construction, provide a drip leg on the line that is of sufficient length to accommodate a minimum of one gallon of liquid. Provide a standard capped refrigerant service valve to facilitate liquid removal. Accumulated liquid must be drained from the drip leg into an evacuated waste container once every six months, at a minimum, and more often if the purge operates excessively.

Purge Discharge Vent Line

On CVHE, CVHF and CVHG units, the purge discharge is factory-piped downstream of the rupture disc on the unit.

Rupture Disc Vent Installation

All CenTraVac™ chillers are equipped with carbon rupture discs. A cross-section of the rupture disc assembly appears in Figure 10 along with an illustration indicating the location of the rupture disc on the suction elbow.

If refrigerant pressure within the evaporator exceeds 15 psig, the rupture disc breaks, shell pressure is relieved as refrigerant escapes from the chiller.

When constructing the rupture disc vent line, be sure to consult local codes for applicable guidelines and constraints.

Several general recommendations for rupture disc vent line installation are outlined below.

1. Verify that the vacuum support side of the rupture disc is positioned as shown in the cross-section view that appears in Figure 10.

   Note: If the rupture disc was removed for any reason, it must be reinstalled as shown.

2. Do not apply threading torque to the outside pipe assembly when installing the connecting pipe.

CAUTION

Do not apply threading torque to the outside pipe. Failure to do so may damage the rupture disc assembly.

3. Support the vent piping, use a flexible connection to avoid placing stress on the rupture disc. (Stress can alter rupture pressure and cause the disc to break prematurely.)

Vent Piping

The flexible connector used to isolate the rupture disc from excessive vent line vibration must be compatible with the refrigerant in use. Use a flexible, steel connector such as the stainless-steel type (from Vibration Mounting and Control, Inc.) or equivalent.

See Figure 12 for a recommended relief piping arrangement.

Important: Vent pipe size must conform to ANSI and ASHRAE Standard 15, which discusses vent pipe sizing.

Use Table 7 and then Figure 13 to determine proper vent pipe size.

Note: To determine the total "C" value for a specific unit, add the appropriate "C" values for the evaporator, standard condenser and economizer. If the unit is equipped with any options (e.g., heat recovery, free cooling, or an auxiliary condenser), add the applicable "C" value(s) to this total.

With this new sum, refer to Figure 13 to determine the vent line pipe diameter needed to handle flow.

4. Normally, where multiple chillers are used, install a separate rupture disc vent line for each unit.
5. Consult local regulations for any special relief line requirements and refer to Refrigerant Handling Guidelines.
6. The discharge of the vent line outside should not be in the general vicinity of any fresh air intakes to the building. Any gas venting from the vent line should not be allowed to re-enter the building.

Figure 11. Illustrates rupture disc location, cross section of rupture disc and recommended rupture disc relief piping

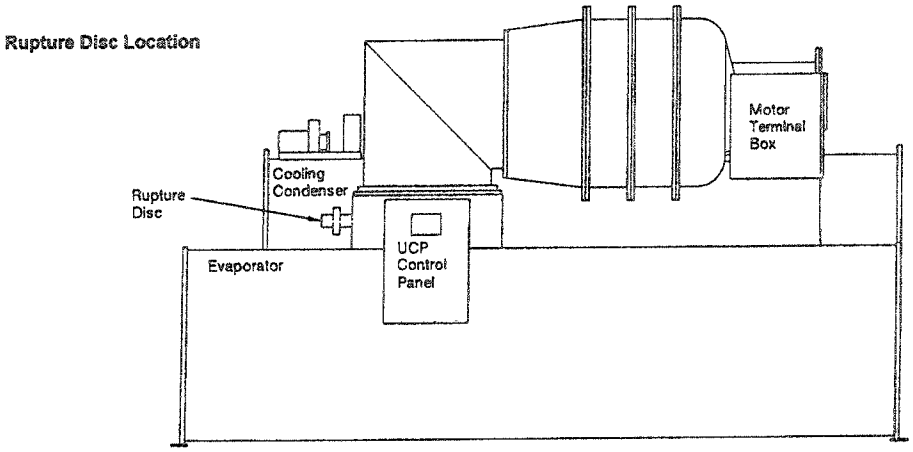

Cross Section of Rupture Disc

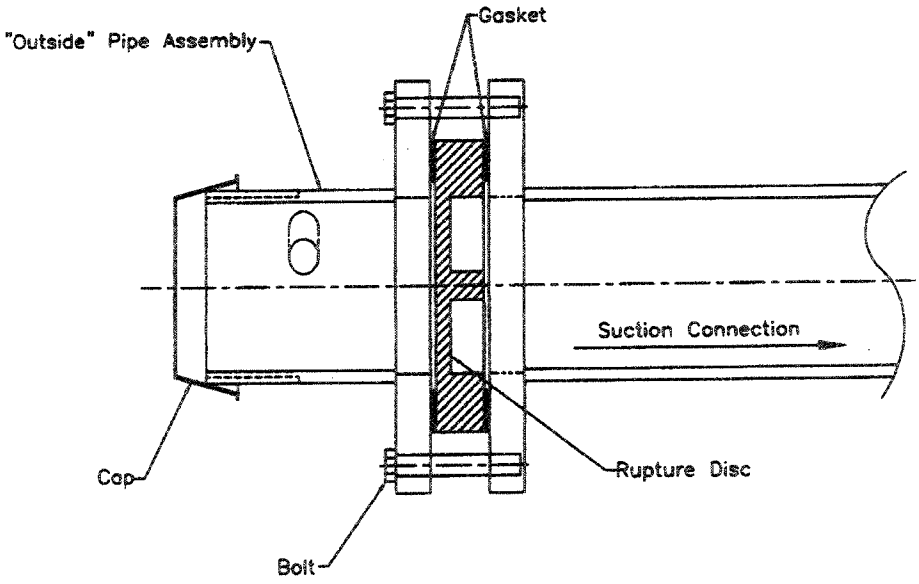

Vent Piping

Figure 12. Arrangement for rupture disc relief piping

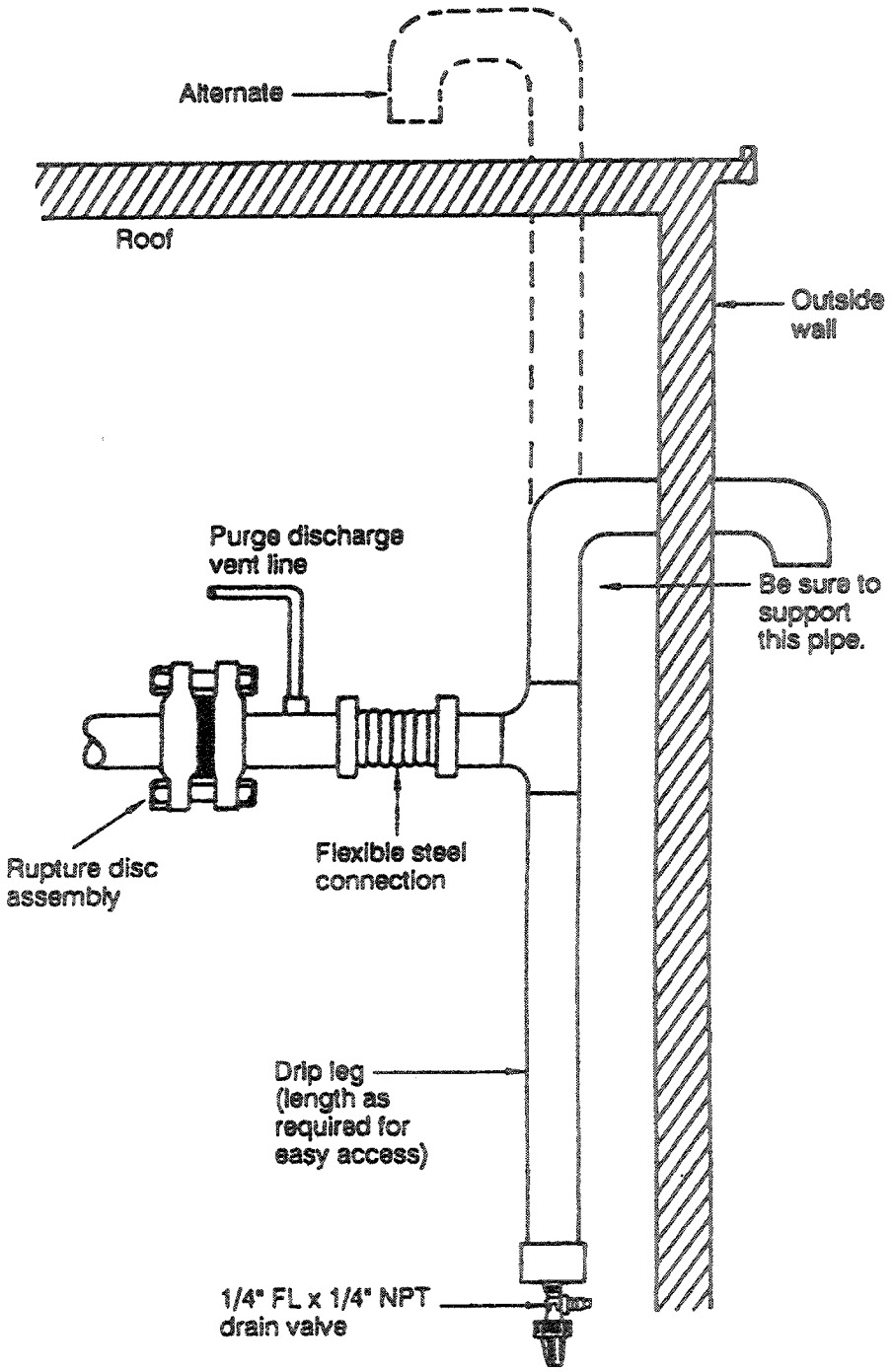

Vent Piping

Table 7. "C" values used to determine rupture disc vent line sizes – CVHE, CVHF and CVHG

Evaporator Size (EVSZ) (3)	Condenser Size (CDSZ) (4)	"C" Values for Unit Components							
		Rupture Disc Diameter	Evaporator	Standard Condenser	Economizer	Short H.R. Condenser	Long H.R. Condenser	Auxiliary Condenser	With Free Cooling
032S	032S	3" (76 mm)	26.25	18.87	4.85	18.87	25.19	15.28	4.16
032S	032L	3" (76 mm)	26.25	25.19					
032L	032L	3" (76 mm)	35.04	25.19					
050S	050S	3" (76 mm)	33.05	23.56	7.44	23.56	31.45	15.28	6.16
050S	050L	3" (76 mm)	33.05	31.45					
050L	050L	3" (76 mm)	44.13	31.45					
080S	080S	3" (76 mm)	45.59	29.06	11.63	29.06	38.80	15.28	5.87
080S	080L	3" (76 mm)	45.59	38.80					
080L	080L	3" (76 mm)	60.86	38.80					
142E	142L	3" (76 mm)	74.30	50.50	17.40	N/A*	Design Special	15.28	Design Special
142M	142L	3" (76 mm)	58.47	50.50					
142L	142L	3" (76 mm)	68.86	50.50			50.50		7.10
210L	210L	3" (76 mm)	75.16	56.72			N/A*		
250E	250L	3" (76 mm)	93.81	62.12			56.72		

Notes:

1. To determine the total "C" value for a specific unit, add the appropriate ""C" values for the evaporator, standard condenser and economizer. If the unit is equipped with any options (e.g., heat recovery, free cooling or an auxiliary condenser, add the applicable "C" values to this total. With this new sum, refer to Figure 12 to determine the vent line pipe diameter.
2. If piping multiple rupture discs (multiple units) to a common vent line, first determine the total "C" value for each unit, and then; add all "C" values together and apply the result to the "vent pipe sizing chart" in Figure 12.
3. EVSZ = Evaporator Shell Size;
   S = Short Shell
   L = Long Shell
   E = Extended Shell
   M = Medium
4. CDSZ = Condenser Shell Size;
   S = Short Shell
   L = Long Shell
   E = Extended Shell

*N/A = Not Available

Vent Piping

Figure 13. Rupture disc vent pipe sizing

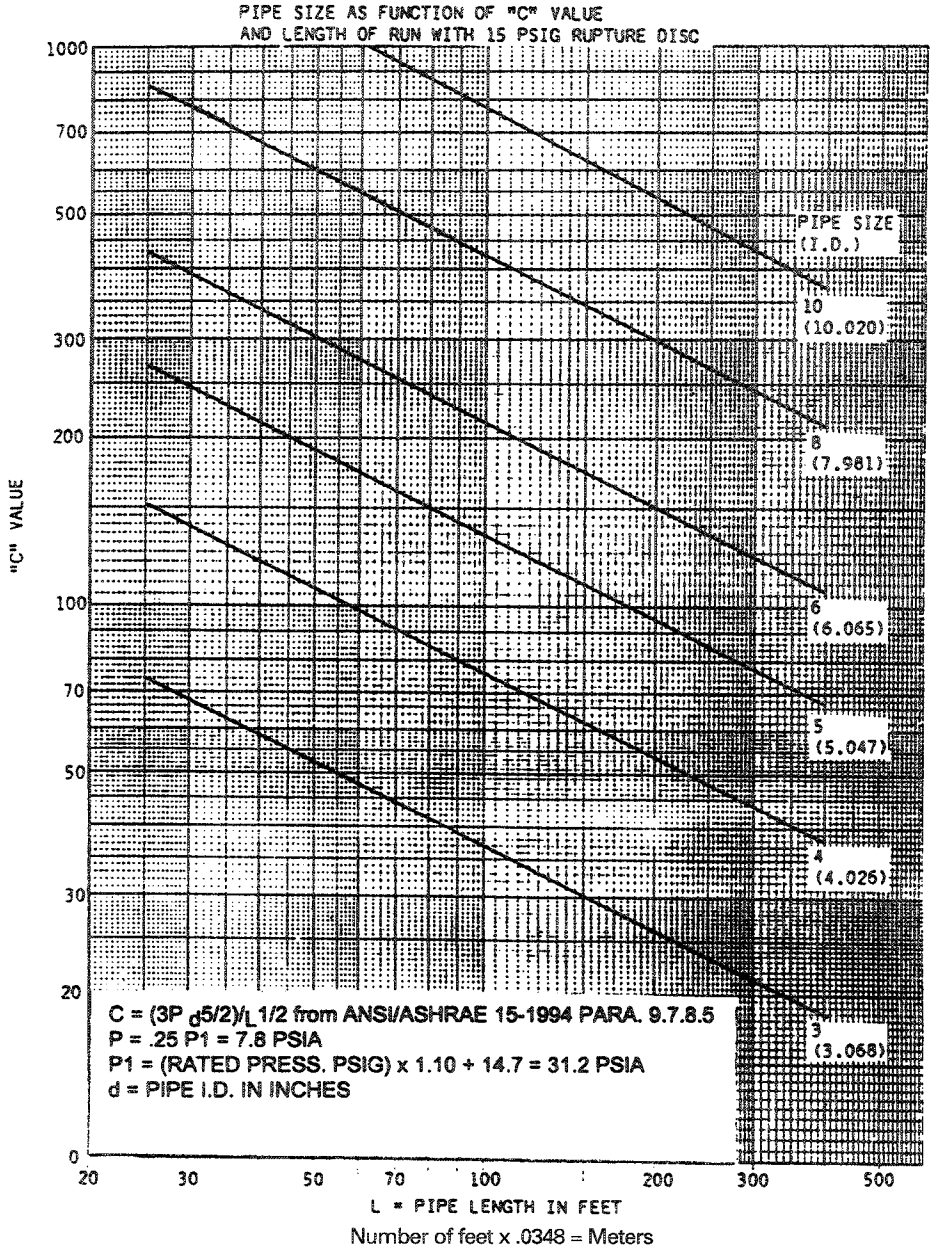

Number of feet x .0348 = Meters

Insulation

Unit Insulation Requirements

Factory-installed insulation is available as an option for all CVHE, CVHF and CVHG units.

In those instances where the chiller is not factory-insulated, install insulation over the areas outlined and highlighted with dashed lines Figure 14. It may also be necessary to insulate the compressor suction cover and motor barrel if the unit is installed in an area subjected to high humidities.

Insulate both 1/4" [6.4 mm] eductor lines, one from the suction cover and one from the evaporator to prevent sweating.

The quantities of installation required based on unit size and insulation thickness are listed in Table 8. Insulation thickness is determined at normal design conditions which are:
- 85°
- 75% Relative Humidity

Note: If the unit is not factory-insulated: Install insulation around the evaporator bulbwells; and, ensure that the bulbwells and connections for the water box drains and vents are still accessible after insulation is applied. The sensor modules (LLID's) and interconnecting four wire cable (IPC Buss) must be raised up above the field installed insulation. Secure the IPC Buss to the insulation top/ outer surface after insulation is completed. Do not insulate over the wiring or sensor devices.

Table 8. CVHE, CVHF and CVHG evaporator insulation requirements

EVSZ (Note 1)	Standard Unit		Free Cooling	
	3/4" [19 mm] Insulation (Note 2) (Square Feet)	3/8" [9.5 mm] Insulation (Note 3) (Square Feet)	3/4" [19 mm] Insulation (Note 2) (Square Feet)	3/8" [9.5 mm] Insulation (Note 3) (Square Feet)
032S	337	52	347	74
032L	365	52	377	74
050S	385	63	398	72
050L	420	63	436	72
080S	505	84	515	97
080L	553	84	566	97
142M	555	98	555	133
142L	578	98	578	133
142E	603	104	629	133
210L	700	98	710	133
210 D	1220	193	Not Available	Not Available
250 D	1308	193	Not Available	Not Available
250 E	770	97	Not Available	Not Available

Notes:
1. EVSZ = Evaporator Shell Size, L = Long Shell, S = Short Shell
2. D = Duplex, M = Medium, E = Extended
3. 3/4" [19 mm] sheet insulation is installed on the evaporator, evaporator water boxes, compressor motor, suction elbow and suction cover as indicated in Figure 13.
4. 3/8" [9.5 mm] sheet insulation is installed on all economizers. All liquid lines and other pipes require the use of 1/2" [13 mm] pipe insulation or 3/8" [9.5 mm] sheet insulation. Copper oil eductor tube lines require pipe insulation.
5. Refrigerant Pump units are NOT insulated on the motor or refrigerant drain lines.

Insulation Thickness Requirements

Factory applied insulation. All low temperature surfaces are covered with 3/4" (19mm) Armaflex II or equal (thermal conductivity = 0.28 BTU/hr-ft sq.) (1.59 W/m2-K), including the evaporator, water boxes and suction elbow. The economizer and motor cooling lines are insulated with 3/8" (10mm) and 1/2" (13mm) insulation respectively.

Insulation is Armaflex or equivalent closed cell elastomeric insulation, to prevent sweating up to a dew point rating of 74°F K = 0.25. Chillers in high humidity areas or ice storage, low leaving water temperature (less than 36 degree chilled water temperature/glycol) units may require double thickness to prevent sweating.

CAUTION

TO PREVENT DAMAGE TO FACTORY-INSTALLED INSULATION, do not allow the insulation to be exposed to excessive sunlight. Failure to do so may damage insulation.

CAUTION

IF THE INSULATION WILL BE PAINTED IN THE FIELD, USE ONLY WATER-BASED LATEX PAINTS. Failure to do so results in damage because thinners and solvents used or other types of paints may cause seams in the insulation to open as a result of shrinkage.

Insulation

Figure 14. Recommended area for unit insulation

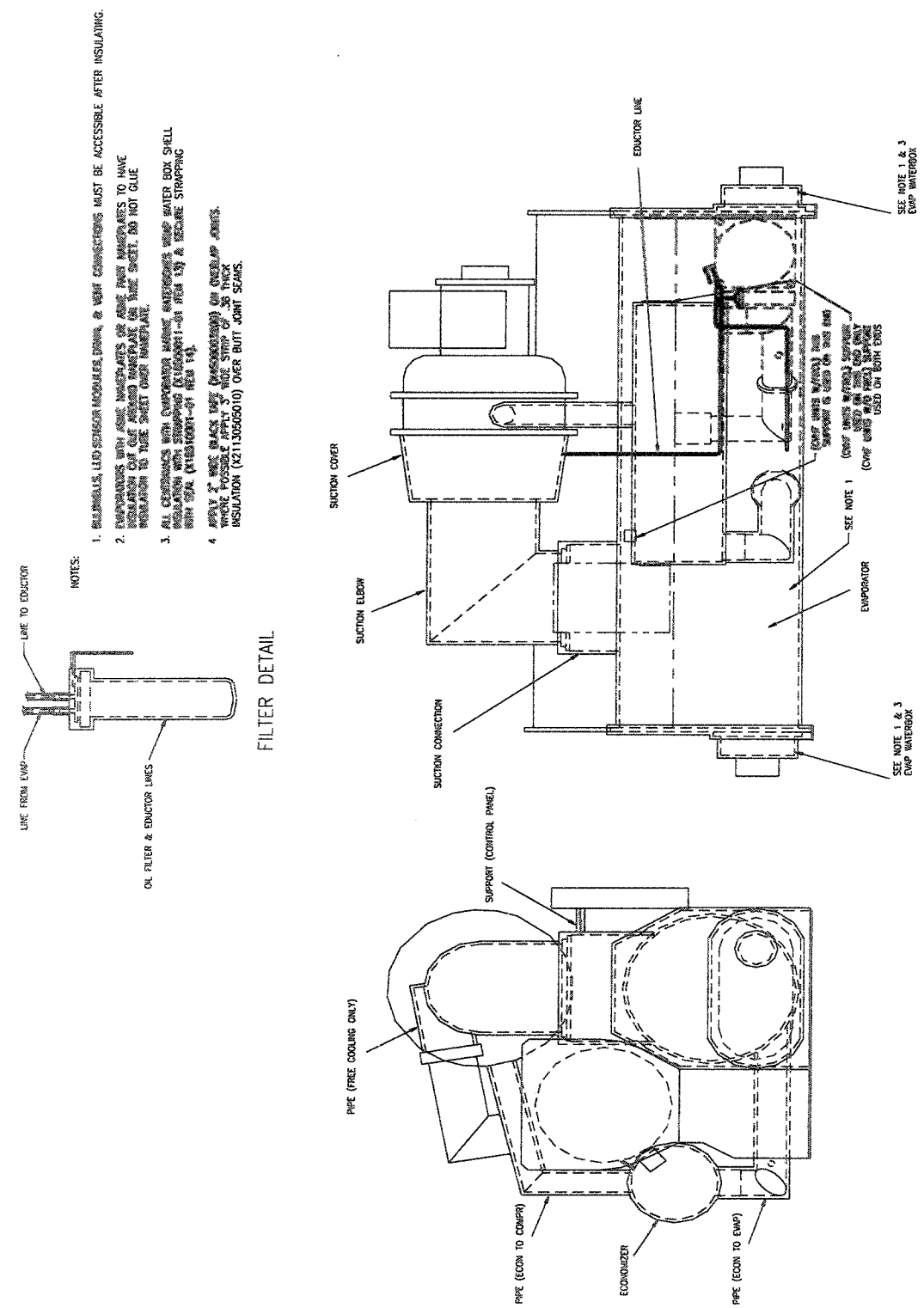

TRANE®

Trane
A business of American Standard Companies
www.trane.com

For more information contact your local district office or e-mail us at comfort@trane.com

Literature Order Number	CVHE-SVN02B-EN
File Number	SV-RF-CVHE-CTV-SVN02B-EN-303
Supersedes	CVHE-SVN02A-EN
Stocking Location	Inland

Trane has a policy of continuous product and product data improvement and reserves the right to change design and specifications without notice. Only qualified technicians should perform the installation and servicing of equipment referred to in this publication.

TRANE®

Operation Maintenance

CVHE-OM-8C

Library	**Service Literature**
Product Section	**Refrigeration**
Product	**Centrifugal Liquid Chillers**
Model	**CVHE/F/G**
Literature Type	**Operation/Maintenance**
Sequence	**8C**
Date	**March 1, 2001**
File No.	**SV-RF-CTV-CVHE-OM-8C-2001**
Supersedes	**SV-RF-CTV-CVHE-OM-8B-2000**

Water-Cooled Hermetic CenTraVac®

MODELS CVHE, CVHF, CVHG with UCP2 Control Panel

Design Sequence
CVHE "3G"
CVHF "1T"
CVHG "1J"

CVHE 60 HZ 230, 250, 280, 320, 360, 400, 450, 500
CVHE 50 HZ 190, 210, 240, 270, 300, 330, 370, 420
CVHF 60 HZ 350, 410, 485, 555, 640, 650, 770, 910, 1060, 1280, 1470, 1720
CVHG 50 HZ 410, 480, 565, 670, 780, 920, 1067

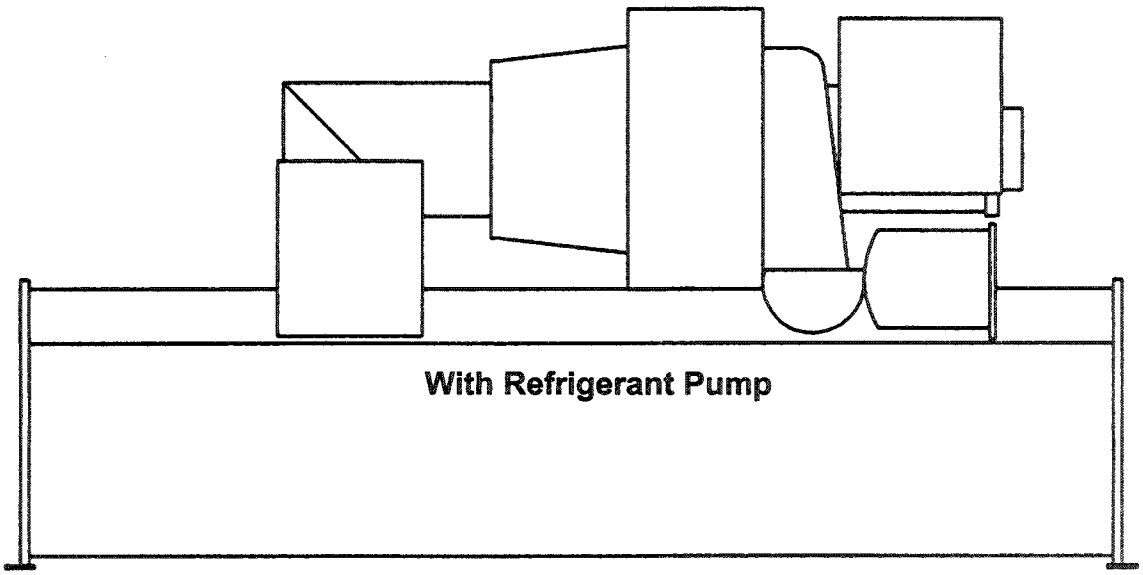

With Refrigerant Pump

X39640534-04

Since the Trane Company has a policy of continuous product and product data improvement, it reserves the right to change design and specifications without notice. Only qualified technicians should perform the installation and servicing equipment referred to in this publication.

Warnings and Cautions

NOTICE

Warnings and Cautions appear at appropriate locations throughout this manual.

Read these carefully.

Warning: Indicates a potentially hazardous situation which, if not avoided, could result in death or serious injury.

CAUTION: Indicates a potentially hazardous situation which, if not avoided, may result in minor or moderate injury. It may also be used to alert against unsafe practices and where property-damage only accidents could occur.

©American Standard Inc. 2001

Table of Contents

Subject	Page Number
Product Coding Definition	6
General Information	12
Literature Change	12
About this Manual	12
Commonly Used Acronyms	12
Warnings and Cautions	13
Unit Nameplate Information	13
Mechanical Operation - CVHE, CVHG	14
Overview	14
Cooling-Only Cycle	14
Units With Refrigeration Pump	18
Compressor Lubrication System - CVHE, CVHG	18
Motor Cooling System	18
Mechanical Operation - CVHF	20
Overview	20
Cooling-Only Cycle	20
CVHF Units With Refrigerant Pump	24
Compressor Lubrication System - CVHF	24
Motor Cooling System	24
Options - CVHE, CVHF, CVHG	25
Free Cooling Cycle CVHE, CVHF, CVHG	25
Heat Recovery Cycle	26
Auxiliary Condensers	26
Ice Machine Control	26
Base Loading	27
Tracer Base Loading	27
External Base Loading	27
Base Loading Control Algorithm	27
Unit Mounted Refrigerant Monitor	27
Unit Mounted Adaptive Frequency™ Drive	27
Chiller Control System	29
Unit Control Panel	29
Chiller Module (1U1)	29
Circuit Module (1U2)	31
Stepper Module (1U3)	31
Clear Language Display Module (1U4)	31
Options Module (1U5)	32
Starter Module (2U1)	32
Purge Module (3U1)	32
UCP2 Board Dip Switch Settings	43
Setup for External Current Limit Setpoint	44
Setup for External Chilled Water Setpoint	44
Refrigerant Monitor Input	44
Load Indication Output	44
Percent RLA Output	44
Percent Condenser Pressure Output	45
Refrigerant Differential Pressure Indication Output	48
Electrical Sequence of Operation	48
Overview	48

Table of Contents

Subject	Page Number
Circuit Breaker 1CB1	48
Circuit Breaker 1CB2	48
Circuit Breaker 1CB3	48
Chilled and Condenser Water Flow Interlock Circuits	48
UCP2 and Wye-Delta Starter Control Circuits	48
Vane Actuator Control	49
Circuit Breaker 1CB3 Oil Pump and Refrigerant/Oil Pump	51
Restart Inhibit	51
Controls Chilled Water Reset (CWR)	54
Return Water	54
Outdoor Air Temperature	54
Where	54
Constant Return	55
Differential to Start/Stop	59
Leaving Water Temperature Cutout	59
Low Refrigerant Temperature Cutout	59
Enhanced Condenser Limit Control	59
Free Cooling	60
Hot Gas Bypass	60
Ice Machine Control	62
Unit Start-Up Procedures	62
Daily Unit Start-Up	62
Seasonal Unit Start-Up	63
Unit Shutdown Procedures	63
Daily Unit Shut-Down	63
Seasonal Unit Shut-Down	63
Trouble Analysis	64
Procedure for Selecting Current Overload Settings for UCP2	65
Periodic Maintenance	67
Overview	67
Record Keeping Forms	67
Daily Maintenance and Checks	67
Weekly Maintenance	67
Every 3 Months	67
Every 6 Months	67
Off-Season Maintenance	68
Annual Maintenance	68
Compressor Oil Change on CVHE, CVHF, CVHG	68
Oil Change Procedure	68
Replacing Oil Filter	69
Oil Filter Replacement	69
Other Maintenance Requirements	69
Lubrication	70
Refrigerant Charge	72
Recovery and Recycle Connections	73
Leak Testing	73
Cleaning the Condenser	73
Cleaning the Evaporator	74
Control Settings and Adjustments	74
Purge System	74
Installed Unit Extended Storage	75
Overview	75
Unit Preparation	75
Forms	76
"Annual Inspection Checklist and Report"	76

Table of Contents

Subject	Page Number
"Checksheet and Request for Serviceman", No. 1-27.08-6 (Front and Back)	77 - 78
"Commissioning Checklist and Start-Up Test Log"	79 - 84
"Start-Up Test Log", No. 1-27.90-5 (Front and Back))	85 - 86
"CenTraVac® Adaptive Frequency Drive™ Startup and Operating Log"	87 - 89
"Trane AFDB Pre Start-Up Checklist and Service Request"	90
Figures	
Figure 1 - General CVHE and CVHG Unit Components with Refrigerant Pump	15 - 16
Figure 2 - Pressure Enthalpy Curve	17
Figure 3 - 2-Stage Economizer	17
Figure 4 - CVHE Compressor Lubrication and Motor-Cooling Systems (Units with Refrigerant Pump)	19
Figure 5 - General CVHF Components	21
Figure 6 - CVHF Pressure/Enthalpy Curve	22
Figure 7 - CVHF Economizer Operation	22
Figure 8 - CVHF Unit with Refrigerant Pump	23
Figure 9 - Base Loading with External mA Input and with External Voltage Input	28
Figure 10 - UCP2 Control Panel	29
Figure 11 - Chiller Module (1U1) - CVHE, CVHF, CVHG	30
Figure 12 - Stepper Control Module (1U3) - CVHE, CVHF, CVHG	33 - 34
Figure 13 - Clear Language Display Module (1U4) - CVHE, CVH/F, CVHG	35
Figure 14 - Options Control Module (1U5) - CVHE, CVHF, CVHG	36
Figure 15 - Purge Module (3U1) - CVHE, CVHF, CVHG	37
Figure 16 - Customer Supplied Remote Mounted Across the Line Starter	38 - 39
Figure 17 - Trane Supplied Remote Mounted Wye-Delta Starter	40 - 41
Figure 18 - Circuit Module (1U2) CVHE, CVHF, CVHG with Refrigerant Pump	42
Figure 19 - Refrigerant Monitor (4U1) - CVHE,CVHF, CVHG	47
Figure 21 - UCP2 Test/Start Timing Sequence	50
Figure 22 - CVHE, CVHF, CVHG - IGV/Actuator Operation and BPI Switch	51
Figure 23 - CVHE, CVHF, CVHG - UCP2 Restart Inhibit Timer	53
Figure 24 - Cutout Strategy	61
Figure 25 - CVHE, CVHF, CVHG - UCP Start-Run-Shutdown Sequence Timing Functions	64
Figure 26 - Rotary Valve in Drain Position	71
Figure 27 - Typical Chemical Cleaning Setup	73
Tables	
Table 1 - Recommended Length to Run Percent Condenser Pressure Output	46
Table 2 - NTON/BT Information	52
Table 3 - Values for Start Reset Types	54
Table 4 - CT-Factor X100	65
Table 5 - CT-Factor X139	66
Table 6 - CT-Factor, Current Overload Settings #1 and #2	66
Table 7 - Normal Chiller Operating Characteristics	67

Product Coding Definition

The CVHE, CVHF and CVHG models are defined using the product definition and selection (PDS) system. This system describes the product offerings in terms of a product coding block which is made up of feature categories and feature codes.

The operating components and options for any Model CVHE, CVHF and CVHG CenTraVac® units can be identified by referring to the alpha-numeric product identification coding block located on the nameplate for the unit. The coding block precisely identifies all characteristics of a unit. Be sure to refer to the service model when ordering replacements parts or requesting service. An example of a typical product code is given on this page.

Note: Unit-mounted starters are identified by a separate number found on the starter.

Typical Product Description Block

MODL CVHE	DSEQ 2R	NTON 320	VOLT 575	REF 123
HRTZ 60	TYPE SNGL	CPKW 142	CPIM 222	TEST AIR
EVTM IECU	EVTH 28	EVSZ 032S	EVBS 280	
EVWC STD	EVWP 2	EVWT NMAR	EVPR 150	
EVCO VICT	EVWA LELE	CDTM IECU	CDTH 28	
CDSZ 032S	CDBS 250	CDWC STD	CDWP 2	
CDWT NMAR	CDPR 150	CDCO VICT	CDWA LELE	
CDTY STD	TSTY STD	ECTY WEOR	ORSZ 230	
PURG PURE	WCNM SNMP	SPKG DOM	OPTI CPDW	
HHOP NO	GENR NO	GNSL NO	SOPT SPSH	
ACCY ISLS	HGBP WO	LUBE SNGL	AGLT CUL	
CNIF UCP2	SRTY USTR	SRRL 207	PNCO TERM	

MODL
Unit Model
CVHE = 3 stage direct drive
CVHF = 2 stage direct drive
CVHG = 3 stage direct drive

DSEQ
Design Sequence

EER
Energy Efficiency Rating

EEV
Energy Efficiency Verification

GENR
Gas Powered Chiller
YES = Yes gas powered chiller
NO = No gas powered chiller

HRTZ
Unit Hertz
60 = 60 Hertz
50 = 50 Hertz

NTON
Nominal Tons
190 = 190 Nominal Tons
210 = 210 Nominal Tons
230 = 230 Nominal Tons
240 = 240 Nominal Tons
250 = 250 Nominal Tons
270 = 270 Nominal Tons
280 = 280 Nominal Tons
300 = 300 Nominal Tons
320 = 320 Nominal Tons
330 = 330 Nominal Tons
350 = 350 Nominal Tons
360 = 360 Nominal Tons
370 = 370 Nominal Tons
400 = 400 Nominal Tons
410 = 410 Nominal Tons
420 = 420 Nominal Tons
450 = 450 Nominal Tons
470 = 470 Nominal Tons
480 = 480 Nominal Tons
485 = 485 Nominal Tons
500 = 500 Nominal Tons
530 = 530 Nominal Tons
555 = 555 Nominal Tons
560 = 560 Nominal Tons
565 = 565 Nominal Tons
590 = 590 Nominal Tons
630 = 630 Nominal Tons
640 = 640 Nominal Tons
650 = 650 Nominal Tons
660 = 660 Nominal Tons
670 = 670 Nominal Tons
710 = 710 Nominal Tons
770 = 770 Nominal Tons
780 = 780 Nominal Tons
800 = 800 Nominal Tons
910 = 910 Nominal Tons
920 = 920 Nominal Tons
1060 = 1060 Nominal Tons
1067 = 1067 Nominal Tons
1280 = 1280 Nominal Tons
1470 = 1470 Nominal Tons
1720 = 1720 Nominal Tons

VOLT
Unit Voltage
208 = 208 Volt 3 Phase
380 = 380 Volt 3 Phase
400 = 400 Volt 3 Phase
415 = 415 Volt 3 Phase
440 = 440 Volt 3 Phase
460 = 460 Volt 3 Phase
480 = 480 Volt 3 Phase
575 = 575 Volt 3 Phase
600 = 600 Volt 3 Phase
2300 = 2300 Volt 3 Phase
2400 = 2400 Volt 3 Phase
3300 = 3300 Volt 3 Phase
4160 = 4160 Volt 3 Phase
6000 = 6000 Volt 3 Phase
6600 = 6600 Volt 3 Phase

Product Coding Definition

CPKW
Compressor Motor Power
142 = 142 KW compressor motor 60hz
154 = 154 KW com pressor motor 60hz
171 = 171 KW compressor motor 60hz
187 = 187 KW compressor motor 60hz
204 = 204 KW compressor motor 60hz
231 = 231 KW compressor motor 60hz
257 = 257 KW compressor motor 60hz
287 = 287 KW compressor motor 60hz
323 = 323 KW compressor motor 60hz
361 = 361 KW compressor motor 60hz
403 = 403 KW compressor motor 60hz
453 = 453 KW compressor motor 60hz
512 = 512 KW compressor motor 60hz
588 = 588 KW compressor motor 60hz
653 = 653 KW compressor motor 60hz
745 = 745 KW compressor motor 60hz
856 = 856 KW compressor motor 60hz
957 = 957 KW compressor motor 60hz
1062 = 1062 KW compressor motor 60hz
1228 = 1228 KW compressor motor 60hz
1340 = 1340 KW compressor motor 60hz
143 = 143 KW compressor motor 50hz
156 = 156 KW compressor motor 50hz
170 = 170 KW compressor motor 50hz
193 = 193 KW compressor motor 50hz
215 = 215 KW compressor motor 50hz
242 = 242 KW compressor motor 50hz
270 = 270 KW compressor motor 50hz
301 = 301 KW compressor motor 50hz
337 = 337 KW compressor motor 50hz
379 = 379 KW compressor motor 50hz
433 = 433 KW compressor motor 50hz
489 = 489 KW compressor motor 50hz
548 = 548 KW compressor motor 50hz
621 = 621 KW compressor motor 50hz
716 = 716 KW compressor motor 50hz
799 = 799 KW compressor motor 50hz
892 = 892 KW compressor motor 50hz

CPIM
Compressor Impeller Diameter
210 = 210 Impeller Cutback
212 = 212 Impeller Cutback
213 = 213 Impeller Cutback
215 = 215 Impeller Cutback
217 = 217 Impeller Cutback
218 = 218 Impeller Cutback
220 = 220 Impeller Cutback
222 = 222 Impeller Cutback
223 = 223 Impeller Cutback
225 = 225 Impeller Cutback
227 = 227 Impeller Cutback
228 = 228 Impeller Cutback
230 = 230 Impeller Cutback
232 = 232 Impeller Cutback
233 = 233 Impeller Cutback
235 = 235 Impeller Cutback
237 = 237 Impeller Cutback
238 = 238 Impeller Cutback
240 = 240 Impeller Cutback
242 = 242 Impeller Cutback
243 = 243 Impeller Cutback
245 = 245 Impeller Cutback
247 = 247 Impeller Cutback
248 = 248 Impeller Cutback
250 = 250 Impeller Cutback
252 = 252 Impeller Cutback
253 = 253 Impeller Cutback
255 = 255 Impeller Cutback
256 = 256 Impeller Cutback
257 = 250 Impeller Cutback
258 = 258 Impeller Cutback
259 = 259 Impeller Cutback
260 = 260 Impeller Cutback
261 = 261 Impeller Cutback
262 = 262 Impeller Cutback
263 = 263 Impeller Cutback
264 = 264 Impeller Cutback
265 = 265 Impeller Cutback
266 = 266 Impeller Cutback
267 = 267 Impeller Cutback
268 = 268 Impeller Cutback
269 = 269 Impeller Cutback
270 = 270 Impeller Cutback
271 = 271 Impeller Cutback
272 = 272 Impeller Cutback
273 = 273 Impeller Cutback
274 = 274 Impeller Cutback
275 = 275 Impeller Cutback
276 = 276 Impeller Cutback
277 = 277 Impeller Cutback
278 = 278 Impeller Cutback
279 = 279 Impeller Cutback
280 = 280 Impeller Cutback
281 = 281 Impeller Cutback
282 = 282 Impeller Cutback
283 = 283 Impeller Cutback
284 = 284 Impeller Cutback
285 = 285 Impeller Cutback
286 = 286 Impeller Cutback
287 = 287 Impeller Cutback
288 = 288 Impeller Cutback
289 = 289 Impeller Cutback
290 = 290 Impeller Cutback
291 = 291 Impeller Cutback
292 = 292 Impeller Cutback
293 = 293 Impeller Cutback
294 = 294 Impeller Cutback
295 = 295 Impeller Cutback

Product Coding Definition

CPIM
Compressor Impeller Diameter
296 = 296 Impeller Cutback
297 = 297 Impeller Cutback
298 = 298 Impeller Cutback
299 = 299 Impeller Cutback
300 = 300 Impeller Cutback
301 = 301 Impeller Cutback
302 = 302 Impeller Cutback
303 = 303 Impeller Cutback
223 = 223 Impeller Cutback
304 = 304 Impeller Cutback
305 = 305 Impeller Cutback
306 = 306 Impeller Cutback
307 = 307 Impeller Cutback
308 = 308 Impeller Cutback
309 = 309 Impeller Cutback
310 = 310 Impeller Cutback
311 = 311 Impeller Cutback
312 = 312 Impeller Cutback
313 = 313 Impeller Cutback
314 = 314 Impeller Cutback
315 = 315 Impeller Cutback
316 = 316 Impeller Cutback
317 = 317 Impeller Cutback
318 = 318 Impeller Cutback
319 = 319 Impeller Cutback
320 = 320 Impeller Cutback
321 = 321 Impeller Cutback
322 = 322 Impeller Cutback
323 = 323 Impeller Cutback
324 = 324 Impeller Cutback
325 = 325 Impeller Cutback
326 = 326 Impeller Cutback
327 = 327 Impeller Cutback
328 =328 Impeller Cutback
329 = 329 Impeller Cutback
330 = 330 Impeller Cutback
331 = 331 Impeller Cutback
332 = 332 Impeller Cutback
333 = 333 Impeller Cutback
334 = 334 Impeller Cutback
335 = 335 Impeller Cutback

Type
Unit Type
AUX = Auxiliary Condenser
HTRC = Heat Recovery
SNGL = Single Condenser Cooling Only

ECTY
Economizer Type
WEOR = 2 Stage Economizer

EVSZ
EVaporator Size
032S = 320 Ton Short Shell
032L = 320 Ton Long Shell
050S = 500 Ton Short Shell
050L = 500 Ton Long Shell
080S = 800 Ton Short Shell
080L = 800 Ton Long Shell
142M = 1420 Ton Medium Shell
142L = 1420 Ton Long Shell
142E = 1420 Ton Extended Shell
210L = 2100 Ton Long Shell
250E = 2500 Ton Extended Shell

EVBS
Evaporator Tube Bundle Size
200 = 200 Nominal Ton Evap
230 = 230 Nominal Ton Evap
250 = 250 Nominal Ton Evap
280 = 280 Nominal Ton Evap
320 = 320 Nominal Ton Evap
350 = 350 Nominal Ton Evap
360 = 360 Nominal Ton Evap
400 = 400 Nominal Ton Evap
450 = 450 Nominal Ton Evap
500 = 500 Nominal Ton Evap
560 = 560 Nominal Ton Evap
630 = 630 Nominal Ton Evap
710 = 710 Nominal Ton Evap
800 = 800 Nominal Ton Evap
890 = 890 Nominal Ton Evap
1080 = 1080 Nominal Ton Evap
1220 = 1220 Nominal Ton Evap
1420 = 1420 Nominal Ton Evap
1610 = 16 10 Nominal Ton Evap
1760 = 1760 Nominal Ton Evap
1900 = 1900 Nominal Ton Evap
2100 = 2100 Nominal Ton Evap
2300 = 2300 Nominal Ton Evap
2500 = 2500 Nominal Ton Evap

EVTM
Evaporator Tubes
IECU = 1.0" Internally Enhanced CU Tubing
TECU = 3/4" Internally Enhanced CU Tubing
SBCU = 3/4" Smooth Bore CU Tubing

EVTH
Evaporator Fluid Type
WATE = Water
CACL = Calcium Chloride
EG = Ethylene Glycol
PG = Propylene Glycol

EVWT
Evaporator Waterbox Type
NMAR = Nonmarine
MAR = Marine

EVWP
Evaporator Water Pass
1 = 1 Pass Evaporator
2 = 2 Pass Evaporator
3 = 3 Pass Evaporator

EVWC
Evaporator Waterbox Construction
STD = Standard Construction

EVPR
Evaporator Waterbox Pressure
150 = 150 PSIG
300 = 300 PSIG

EVCO
Evaporator Waterbox Connection
Vict = Victaulic Connection
FLNG = Flanged Connection

Product Coding Definition

EVWA
Evap Waterbox Arrangement
RERE = Inlet - RH End
RERE = Outlet - RH End

RELE = Inlet - RH End
RELE = Outlet - LH End

LELE = Inlet - LH End
LELE = Outlet - LH End

LERE = Inlet - LH End
LERE = Outlet - RH End

END = In one end out the other

LFLR = Inlet - LH Front
LFLR = Outlet - LH Rear

LRLF = Inlet - LH Rear
LRLF = Outlet - LH Front

RFRR = Inlet - RH Front
RFRR = Outlet - RH Rear

RRRF = Inlet - RH Rear
RRRF = Outlet - RH Front

FRONT = In Front Out Front

REAR = In Rear Out Rear

LFRR = Inlet - LH Front
LFRR = Outlet - RH Rear

RRLF = Inlet - RH Rear
RRLF = Outlet - LH Front

LRRF = Inlet - LH Rear
LRRF = Outlet - RH Front

RFLR = Inlet - RH Front
RFLR = Outlet - LH Rear

CDSZ
Condenser Size
032S = 320 Ton Short Shell
032L = 320 Ton Long Shell
050S = 500 Ton Short Shell
050L = 500 Ton Long Shell
080S = 800 Ton Short Shell
080L = 800 Ton Long Shell
142L = 1420 Ton Long Shell
210L = 2100 Ton Long Shell
250L = 2500 Ton Long Shell

CDBS
Condenser Tube Bundle Size
230 = 230 Nominal Ton Cond
250 = 250 Nominal Ton Cond
280 = 280 Nominal Ton Cond
320 = 320 Nominal Ton Cond
360 = 360 Nominal Ton Cond
400 = 400 Nominal Ton Cond
450 = 450 Nominal Ton Cond
500 = 500 Nominal Ton Cond
560 = 560 Nominal Ton Cond
630 = 630 Nominal Ton Cond
710 = 710 Nominal Ton Cond
800 = 800 Nominal Ton Cond
890 = 890 Nominal Ton Cond

CDBS
Condenser Tube Size
980 = 980 Nominal Ton Cond
1080 = 1080 Nominal Ton Cond
1220 = 1220 Nominal Ton Cond
1420 = 1420 Nominal Ton Cond
1610 = 1610 Nominal Ton Cond
1760 = 1760 Nominal Ton Cond
1900 = 1900 Nominal Ton Cond
2100 = 2100 Nominal Ton Cond
2300 = 2300 Nominal Ton Cond
2500 = 2500 Nominal Ton Cond

CDTM
Condenser Tube Material
IECU = 1.0" Internally Enhanced CU Tube
TECU = 3/4" Internally Enhanced CU Tube
SBCU = 3/4" Smooth Bore CU Tube
SB91 = 3/4" Smooth Bore 90/10 CU/Ni Tube

CDTH
Condenser Tube Thickness
28 = .028" Wall Thickness
35 = .035" Wall Thickness

CFLC
Condenser Fluid Type
WATE - Fluid Type = Water
CACL - Fluid Type = Calcium Chloride
EG - Fluid Type = Ethylene Glycol
PG - Fluid Type = Propylene Glycol

CDTY
Condenser Shell Construction
STD = Standard Condenser Construction
ASME = ASME Condenser Construction

CDWT
Condenser Waterbox Type
NMAR = Nonmarine
MAR = Marine

CDWC
Condenser Waterbox Weld Type
STD = Standard Waterbox
ASME = ASME Waterbox

CDPR
Condenser Water Side Pressure
150 = 150 PSIG
300 = 300 PSIG

CDWP
Condenser Water Pass
2 = 2 Pass
3 = 3 Pass

CDCO
Condenser Waterbox Connection
VICT = Victaulic Connection
FLNG = Flanged Connection

CDWA
Cond Waterbox Arrangement
RERE = In RH End - Out RH End
LELE = In LH End - Out LH End
LFLF = In LH Fron - Out LH Front
LRLR = In LH Rear - Out LH Rear
RFRF = In RH Front - Out RH Front
RRRR = In RH Rear - Out RH Rear
RRRF = In RH Rear - Out RH Front
RRRF = IN RH Rear - Out RH Front

TSTY
Tube Sheet Construction
STD = Standard
ASME = ASME

ORSZ
Orifice Size
180 = 180 Nominal Ton Orifice
200 = 200 Nominal Ton Orifice
210 = 210 Nominal Ton Orifice
230 = 230 Nominal Ton Orifice
240 = 240 Nominal Ton Orifice
250 = 250 Nominal Ton Orifice
265 = 265 Nominal Ton Orifice
280 = 280 Nominal Ton Orifice
300 = 300 Nominal Ton Orifice
320 = 320 Nominal Ton Orifice
340 = 340 Nominal Ton Orifice
360 = 360 Nominal Ton Orifice
375 = 375 Nominal Ton Orifice
400 = 400 Nominal Ton Orifice
415 = 415 Nominal Ton Orifice
450 = 450 Nominal Ton Orifice
460 = 460 Nominal Ton Orifice
500 = 500 Nominal Ton Orifice
510 = 510 Nominal Ton Orifice
560 = 560 Nominal Ton Orifice
585 = 585 Nominal Ton Orifice
630 = 630 Nominal Ton Orifice
650 = 650 Nominal Ton Orifice
680 = 680 Nominal Ton Orifice
710 = 710 Nominal Ton Orifice
750 = 750 Nominal Ton Orifice
790 = 790 Nominal Ton Orifice
800 = 800 Nominal Ton Orifice
835 = 835 Nominal Ton Orifice
880 = 880 Nominal Ton Orifice
900 = 900 Nominal Ton Orifice
935 = 935 Nominal Ton Orifice
990 = 990 Nominal Ton Orifice
1000 = 1000 Nominal Ton Orifice
1045 = 1045 Nominal Ton Orifice
1100 = 1100 Nominal Ton Orifice
1120 = 1120 Nominal Ton Orifice
1185 = 1185 Nominal Ton Orifice
1250 = 1250 Nominal Ton Orifice
1265 = 1265 Nominal Ton Orifice
1335 = 1335 Nominal Ton Orifice
1400 = 1400 Nominal Ton Orifice
1475 = 1475 Nominal Ton Orifice
1540 = 1540 Nominal Ton Orifice
1600 = 1600 Nominal Ton Orifice
1605 = 1605 Nominal Ton Orifice
1660 = 1660 Nominal Ton Orifice
1735 = 1735 Nominal Ton Orifice
1800 = 1800 Nominal Ton Orifice
1810 = 1810 Nominal Ton Orifice
1890 = 1890 Nominal Ton Orifice
1970 = 1970 Nominal Ton Orifice
2060 = 2060 Nominal Ton Orifice
2150 = 2150 Nominal Ton Orifice
2245 = 2245 Nominal Ton Orifice
2345 = 2245 Nominal Ton Orifice
2450 = 2450 Nominal Ton Orifice

Product Coding Definition

AGLT
Agency Listing
None = No Agency Listing
UL = U.L. Listed
CUL = UL Listed with EEV
CLCA = Calif. Code (Includes U.L List)

HGBP
Hot Gas Bypass
With = Hotgas By pass
WO = Without Hotgas Bypass

OPTI
Unit Options
AAZ = International Package
CPDW = Compressor Doweling Only
FRCL = Free Cooling
INSL = Unit Insulation
JAGA = Control Panel Gauges for Japan,
SSCD = Separable Shell/cmpr. Dowling
SPSH = Separable Shells with Compressor Doweling

LUBE
SNGL = Single Oil Filter

PURG
Purge Unit
PURG = Purifier Purge

CNIF
Control Interface
UCP2 = Micro Processor 2nd Generation

COPT
Control Options for UCP2
ACOS = Water Temperature Sensor
ARMN = Refrg Monitor without Scanner
ARMS = Refrg Monitor with Scanner
BRTS = Bearing Oil Temperature Sensors
CLCT = Condenser Limit Controls
CLDC = Complex Character CLD
CWR = Chilled Water Reset Ambient
DIST = Discharge Temperature Sensor
MONP = Monitoring Package
OPTM = Options Module
PNCH = Printer Interface Module
TRMI = Tracer 100 Interface Module
TRMM = Tracer Interface Control Module
TRMS = Tracer Summit Interface Module
WFCH = Water Pressure Sensors. 150 PSI
WFCL = Water Pressure Sensors <150 PSI
WPSR = Chilled/tower Water Flow Display
WVUO = Under-Over Voltage Protection

AMOP
Air Monitor Options
AAKT = Audible Alarm Kit
AA1L = Audible Alarm Kit with 1 Light
AA3L = Audible Alarm Kit with 3 Lights
4CSK = 4-Channel Scanner Kit

ACCY
Unit Accessory
2FS1 = 2 Flow Switches 150 PSI NEMA 1
2FS2 = 2 Flow Switches 300 PSI NEMA 1
2FS3 = 2 Flow Switch 150 PSI Vapor
2FS4 = 2 Flow Switch 300 PSI Vapor
2TME = 2 Thermometers 10" Extd Well
2TMS = 2 Thermometers 10" Std Well
2TR5 = 2 TR5 Timers
3FS1 = 3 Flow Switches 150 PSI NEMA 1
3FS2 = 3 Flow Switches 300 PSI NEMA 1
3FS3 = 3 Flow Switch 150 PSI Vapor
3FS4 = 3 Flow Switch 300 PSI Vapor
3TME = 3 Thermometers 10" Extd Well
3TR5 = 3 TR5 Timers
FS1 = 1 Flow Switch 150 PSI NEMA 1
FS2 = 1 Flow Switch 300 PSI NEMA 1
FS3 = 1 Flow Switch 150 PSI Vapor
FS4 = 1 Flow Switch 300 PSI Vapor
ISLS = Spring Isolators
TME = 1 Thermometer 10" Evtd Well
TMS = 1 Thermometer 10" Std Well
TR5 = 1 TR5 Timer

MODL
Starter Model
CVSF = Centrifugal Chiller Starter

SRTY
Starter Type
UAFD = Unit Mounted AFD
USRT = Star-Delta
USID = Solid-StateUnit Mounted
USOL = Solid-State
RSTR = Star-Delta
RSOL = Solid State
RXL = X-Line Full Volt
RATR = Autotransformer
RPIR = Primary Reactor
CSTR = Star-Delta
CSOL = Solid State
CXL = X-Line Full Volt
CATR - Autotransformer
CPIR = Primary Reactor

VOLT
Starter Voltage
208 = 208 Volt 60 Hz 3 Phase
208 = 230 Volt 60 Hz 3 Phase
380 = 380 Volt 60 Hz 3 Phase
440 = 440 Volt 60 Hz 3 Phase
460 = 460 Volt 60 Hz 3 Phase
480 = 480 Volt 60 Hz 3 Phase
575 = 575 Volt 60 Hz 3 Phase
600 = 600 Volt 60 Hz 3 Phase
2300 = 2300 Volt 60 Hz 3 Phase
2400 = 2400 Volt 60 Hz 3 Phase
4160 = 4160 Volt 60 Hz 3 Phase
3300 = 3300 Volt 60 Hz 3 Phase
6600 = 6600 Volt 60 Hz 3 Phase

380A = 380 Volt 50 HZ 3 Phase
400 = 400 Volt 50 HZ 3 Phase
415 = 415 Volt 50 HZ 3 Phase
330A = 3300 Volt 50 HZ 3 Phase
6000 = 6000 Volt 50 Hz 3 Phase
660A = 6600 Volt 50 Hz 3 Phase

SRRL
Starter Size Based on Max RLA
94 = 94 Maximum Starter RLA
155 = 155 Maximum Starter RLA
187 = 187 Maximum Starter RLA
200 = 200 Maximum Starter RLA
207 = 207 Maximum Starter RLA
233 = 233 Maximum Starter RLA
346 = 346 Maximum Starter RLA
360 = 360 Maximum Starter RLA
372 = 372 Maximum Starter RLA
467 = 467 Maximum Starter RLA
553 = 553 Maximum Starter RLA
592 = 592 Maximum Starter RLA
606 = 606 Maximum Starter RLA
606 = 606 Maximum Starter RLA
700 = 700 Maximum Starter RLA
935 = 935 Maximum Starter RLA
1080 = 1080 Maximum RLA
1212 = 1212 Maximum Starter RLA
1402 = 1402 Maximum Starter RLA
1856 = 1856 Maximum Starter RLA

PNCO
Connection Type
CB = Circuit Breaker
CBCL = Circuit Breaker Current Limiting
CBHC = Circuit Breaker Higher-Interrupt
CBIC = Circuit Breaker High-Interrupt
DISC = Non-fused Disconnect Switch
ISSW = Isolation Switch
TERM = Terminal Block Connection

AGLS
Agency Listing
None = No Agency Listing
UL = U.L. Listed
CUL = UL Listed with EER
CLCA = California Code (Includes U.L. Listing

SRFC
Power Factor Correct Capacitor
YES = PFCC Correct to 93.5 - 95.5% PF

SRLT
Surge Protector/Lightning Arrestor
YES = Surge protector/Lightning Arrestor

UNVR
Under/Over Voltage Relay
YES = Under/Over Voltage Relay

GRDF
Ground Fault Protection
YES = Ground Fault Protection

SRMT
Control Meters
CTRB = Volt & Amp Meters
CTRV = Volt Meters
CTRA = Amp Meters

MODL
Adaptive Frequency Drive
AFDB = Adaptive Frequency Drive

SRRL
Frequency Drive Frame Size
386 = Frame Size - 386 Max RLA
500 = Frame Size - 500 Max RLA
643 = Frame Size - 643 Max RLA

FSUP
Factory Startup
LM = 50 Miles or Less
HM = 51 Miles or More

HRIN
Harmonic Attenuation
LNRC = Remote Mounted Line Reactor
UNLR = Unit Mounted Line Reactor
S12 = 12 Pulse Auto Transformer

Product Coding Definition

CHSZ
Heat Recovery Condenser Shell Size
032S = 320 Ton Short Shell
032L = 320 Ton Long Shell
050S = 500 Ton Short Shell
050L = 500 Ton Long Shell
080S = 800 Ton Short Shell
080L = 800 Ton Long Shell
142L = 1420 Ton Long Shell
210L = 2100 Ton Long Shell

CHBS
Condenser Tube Bundle Size
230 = 230 Nominal Tons
250 = 250 Nominal Tons
280 = 280 Nominal Tons
320 = 320 Nominal Tons
400 = 400 Nominal Tons
450 = 450 Nominal Tons
500 = 500 Nominal Tons
560 = 560 Nominal Tons
630 = 630 Nominal Tons
710 = 710 Nominal Tons
800 = 800 Nominal Tons
890 = 890 Nominal Tons
980 = 980 Nominal Tons
1080 = 1080 Nominal Tons
1220 = 1220 Nominal Tons
1420 = 1420 Nominal Tons
1610 = 1610 Nominal Tons
1760 = 1760 Nominal Tons
1900 = 1900 Nominal Tons
2100 = 2100 Nominal Tons

CHTM
Condenser Tube Material
IECU = 1.0" Internally Enhanced Cu Tube
TECU = 0.75" Internally Enhanced CU Tube
SBCU = 0.75" Smooth Bore CU Tube
SB91 = 0.75" Smooth Bore 90/10 CU/NI Tube
SBTI = 0.75" Smooth Bore Titanium
SB73 = 0.75" Smooth Bore 70/30 CU/NI Tube

CHTH
Condenser Tube Wall Thickness
28 = .028" Tube Wall Thickness
35 = .035" Tube Wall Thickness
25 = .025" Tube Wall Thickness
42 = .042" Tube Wall Thickness
49 = .049" Tube Wall Thickness

HFLD
Condenser Fluid Type
WATE = Fluid Type - Water
CACL = Fluid Type - Calcium Chloride
EG = Fluid Type = Ethylene Glycol
PG = Fluid Type - Propylene Glycol

CHWC
Condenser Waterbox Construction
STD = Standard Waterbox Construction
ASME = ASME Waterbox Construction

CHWT
Condenser Waterbox Type
NMAR = Non-marine Waterbox
MAR = Marine Waterbox

CHPR
Condenser Waterbox Pressure
150 = 150 PSIG Water Pressure
300 = 300 PSIG Water Pressure

CHCO
Condenser Waterbox Connection
VICT = Victaulic Connection
FLNG = Flanged Connection

CHWA
Condenser Waterbox Arrangement
RERE = In RH End - Out RH End
LERE = In LH End - Out LH End
LFLF = In LH Front - Out LH Front
LRLR = In LH Rear - Out LH Rear
RFRF = In RH Front - Out RH Front
RRRR = In RH Rear - Out RH Rear
LFLR = In LH Front - Out LH Rear
LRLF = In LH Rear - Out LH Front
RFRR = In RH Front - Out RH Rear
RRRF = In RH Rear - Out RH Front

CABS
Condenser Bundle Size
80 = 80 Nominal Tons
130 = 130 Nominal Tons

CATM
Condenser Tube Material
IECU = 1.0" Internally Enhanced Cu Tube
TECU = 0.75" Internally Enhanced CU Tube
SBCU = 0.75" Smooth Bore CU Tube
SB91 = 0.75" Smooth Bore 90/10 CU/NI Tube
SB73 = 0.75" Smooth Bore 70/30 CU/NI Tube
SBTI = 0.75" Smooth Bore Titanium

CATH
Condenser Tube Wall Thickness
28 = .028" Tube Wall Thickness
35 = .035" Tube Wall Thickness
42 = .042" Tube Wall Thickness

HFLD
Condenser Fluid Type
WATE = Fluid Type - Water
CACL = Fluid Type - Calcium Chloride
EG = Fluid Type - Ethylene Glycol
PG = Fluid Type - Propylene Glycol

CAWT
Condenser Waterbox Type
NMAR = Non-marine Waterbox
MAR = Marine Waterbox

CAPR
Condenser Water Side Pressure
150 = 150 PSIG Water Pressure
300 = 300 PSIG Water Pressure

CACO
Condenser Waterbox Connection
VICT = Victaulic Connection
FLNG = Flanged Connection

CAWA
Condenser Waterbox Arrangement
RERE = In RH End - Out RH End
LELE = In LH End - Out LH End
LFLF = In LH Front - Out LH Front
LRLR = In LH Rear - Out LH Rear
RFRF = In RH Front - Out RH Front
RRRR = In RH Rear - Out RH Rear
LFLR = In LH Front - Out LH Rear
LRLF = In LH Rear - Out LH Front
RFRR - In RH Front - Out RH Rear
RRRF - In RH Rear - Out RH Front

General Information

Literature Change

CVHE-OM-8C - March 2001
Supersedes:
CVHE-OM-8B - September 2000
CVHE-OM-8A - December 1999
CVHE-OM-8 - May 1999

About this manual

Information regarding 032 and 050 shell sizes on models CVHE, CVHF and CVHG is in this manual. Extended capacity, available only on models CVHF 1470 and 1720, has been added to this manual. The operation and maintenance of 50 and 60 Hz. CVHE, CVHF and CVHG centrifugal chillers equipped with micro-computer-based control systems, whether standard cooling or heat recovery, is described.

Important: *All diagnostic information is provided in the latest revision of the clear language display manual, CVHE-CLD-1A or latest revision which ships with the unit or is available at the nearest trane office.*

By carefully reviewing this information and following the instructions given, the owner/operator can successfully operate and maintain a CVHE, CVHF or CVHG unit.

If mechanical problems do occur, however, contact a qualified service organization to ensure proper diagnosis and repair of the unit.

Commonly Used Acronyms

For convenience, a number of acronyms are used throughout this manual. These acronyms are listed alphabetically below, along with the "translation" of each:

For your convenience, a number of acronyms are used throughout this manual. These acronyms are listed alphabetically below, along with the "translation" of each:

AFDB = Adaptive Frequency Drive

ASME = American Society of Mechanical Engineers

ASHRAE = American Society of Heating, Refrigerating and Air Conditioning Engineers

BAS = Building Automation System

CABS = Auxiliary Condenser Tube-Bundle S

CDBS = Condenser Bundle Size

CDSZ = Condenser Shell Size

CLD = Clear Language Display

CWR = Chilled Water Reset

DTFL = Design Delta-T at Full Load (i.e., the difference between entering and leaving chilled water temperatures)

ENT = Entering Chilled Water Temperature

FC = Free Cooling

GPM = Gallons-per-minute

HGBP = Hot Gas Bypass

HVAC = Heating, Ventilating, and Air Conditioning

IE = Internally-Enhanced Tubes

IPC = Interprocessor Communication

LBU = La Crosse Business Unit

LCD = Liquid Crystal Display

LED = Light Emitting Diode
PFCC = Power Factor Correction Capacitor

LCD = Liquid Crystal Display

LED = Light Emitting Diode

PFCC = Power Factor Correction Capacitor

PSID = Pounds-per-Square-Inch (differential pressure)

PSIG = Pounds-per-Square-Inch (gauge pressure)

RCLD = Remote Clear Language Display

UCP2 = Chiller Control Panel for CenTraVacs

General Information

Warnings and Cautions

Notice that warnings and cautions appear at appropriate intervals throughout this manual. Warnings are provided to alert installing contractors to potential hazards that could result in personal injury or death, while cautions are designed to alert personnel to conditions that could result in equipment damage.

Your personal safety and the proper operation of this machine depend upon the strict observance of these precautions.

Unit Nameplate Information

The unit nameplate is located on the left side of the unit control panel (UCP). The following information is provided on the unit nameplate.

1. Service model and size descriptor
2. Unit serial number
3. Identifies unit electrical requirements
4. Correct operating charges and type of refrigerant
5. Unit Test Pressures and Maximum Operating Pressures
6. Identifies unit Installation and Operation and Maintenance manuals
7. Product Description Block (Identifies all unit components and unit "design sequence" used to order literature and make other inquiries about the unit).
8. Drawing numbers for Unit Wiring Diagrams.

Mechanical Operation - CVHE, CVHG

Overview

THE FOLLOWING INFORMATION APPLIES TO THE TRANE MODEL CVHE AND CVHG CENTRIFUGAL CHILLER ONLY. CVHF INFORMATION IS DISCUSSED IN ANOTHER SECTION OF THIS MANUAL. Refer to the appropriate operation manual for refrigeration cycle descriptions of other models.

Each CVHE, CVHG unit is composed of 5 basic components.

-- the evaporator,
-- 3-stage compressor,
-- water-cooled condenser,
-- 2-stage economizer,
-- related interconnecting piping.

A heat-recovery or auxiliary condenser can be factory-added to the basic unit assembly to provide a heat-recovery cycle.

Figure 1 illustrates the general component layout of a typical CVHE, CVHG chiller.

CVHE, CVHG cooling-only and heat recovery modes of operation are described in the following sections. A pressure enthalpy diagram (shown in Figure 2) is provided to further illustrate unit operation.

Cooling-Only Cycle

When the CVHE or CVHG is functioning in the cooling mode, liquid refrigerant is distributed along the length of the evaporator and sprayed through small holes in a distributor (i.e., running the entire length of the shell) to uniformly coat each evaporator tube. Here, the liquid refrigerant absorbs enough heat from the system water circulating through the evaporator tubes to vaporize.

The gaseous refrigerant is then drawn through the eliminators (which remove droplets of liquid refrigerant from the gas) and first-stage variable inlet guide vanes, and into the first stage impeller.

Note: Inlet guide vanes are designed to modulate the flow of gaseous refrigerant to meet system capacity requirements; they also prorate the gas, allowing it to enter the impeller at an optimal angle that maximizes efficiency at all load conditions.

Compressed gas from the first-stage impeller flows through the fixed, second-stage inlet vanes and into the second-stage impeller.

Here, the refrigerant gas is again compressed, and then discharged through the third-stage variable guide vanes and into the third-stage impeller.

Once the gas is compressed a third time, it is discharged into the condenser. Baffles within the condenser shell distribute the compressed refrigerant gas evenly across the condenser tube bundle. Cooling tower water circulated through the condenser tubes absorbs heat from the refrigerant, causing it to condense. The liquid refrigerant then passes through orifice plate "A" and into the economizer.

The economizer reduces the energy requirements of the refrigerant cycle by eliminating the need to pass all gaseous refrigerant through three stages of compression. See Figure 3. Notice that some of the liquid refrigerant flashes to a gas because of the pressure drop created by the orifice plates, thus further cooling the liquid refrigerant. This flash gas is then drawn directly from the first (Chamber A) and second (Chamber B) stages of the economizer into the third-and second-stage impellers of the compressor, respectively.

All remaining liquid refrigerant flows through another orifice plate "C" to the evaporator.

Figure 1 -
General CVHE and CVHG Unit Components (next page)

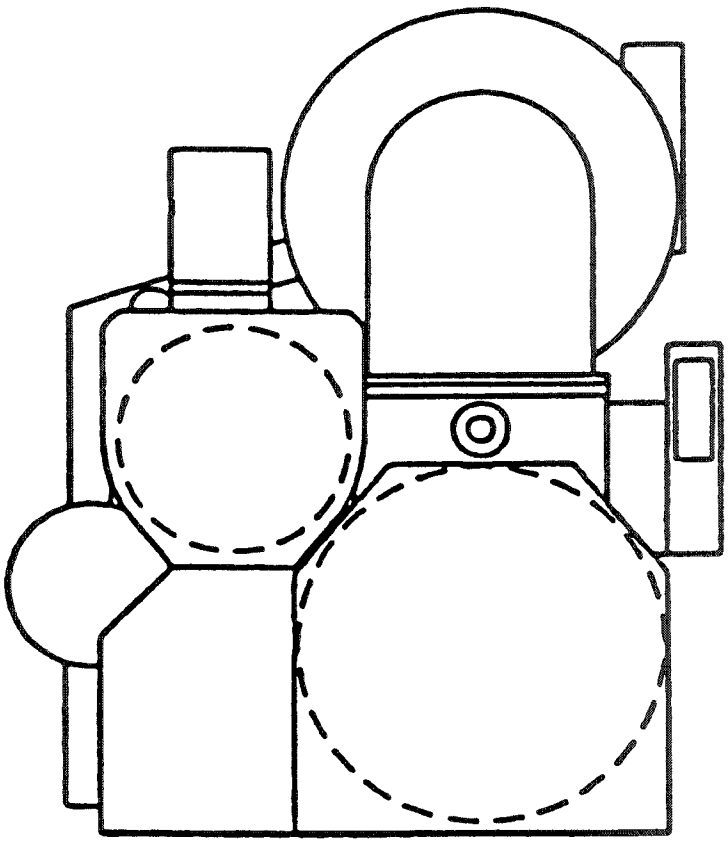

Figure 1 - (Continued)
General CVHE and CVHG Unit Components with Refrigerant Pump

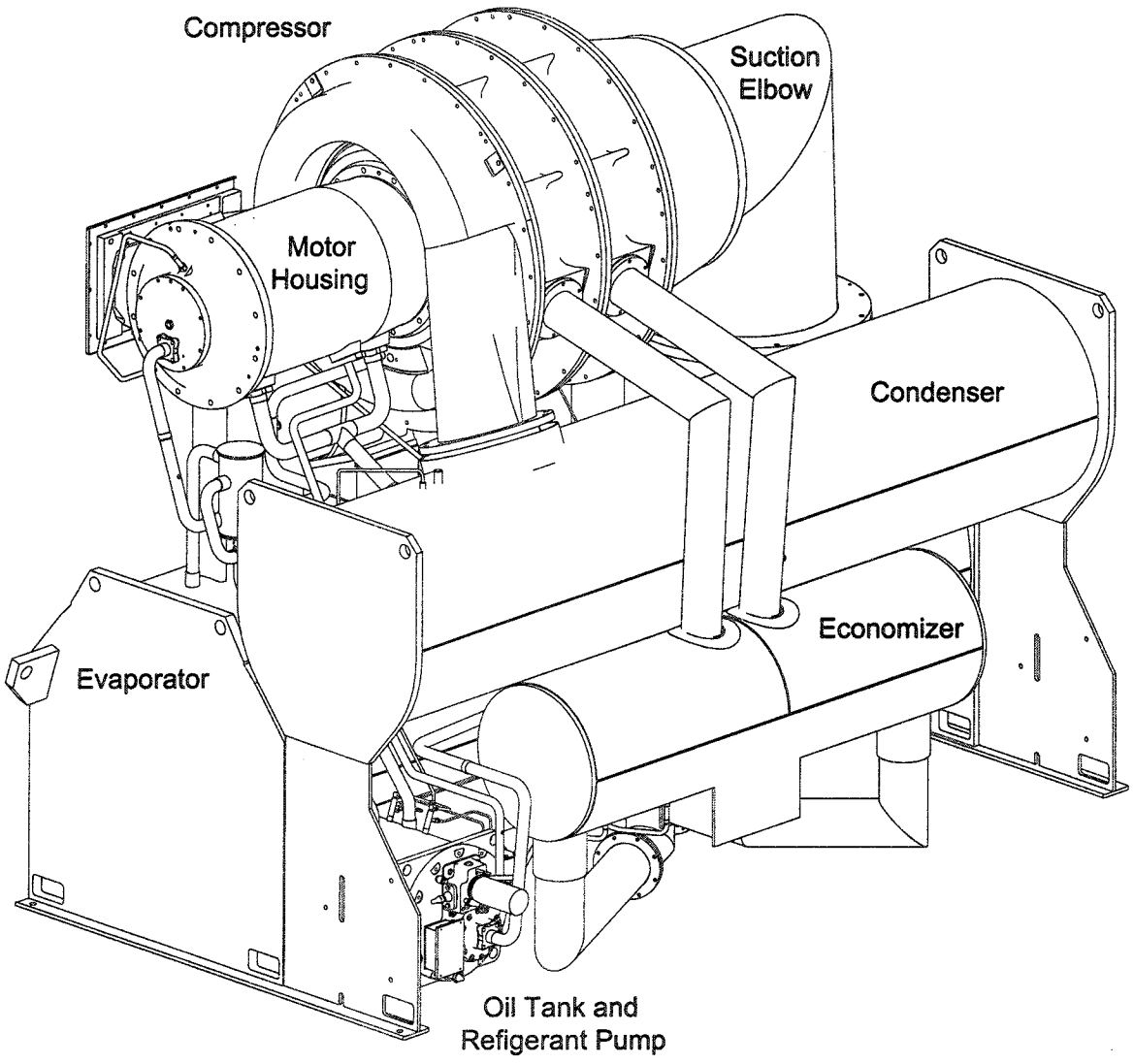

Figure 2
Pressure Enthalpy Curve

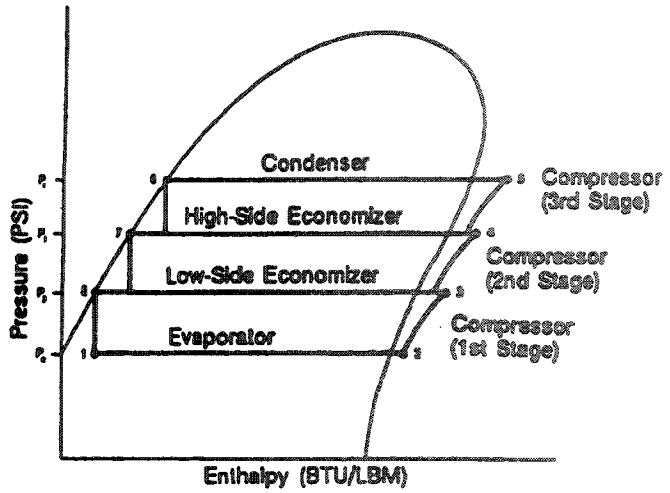

Figure 3
2-Stage Economizer

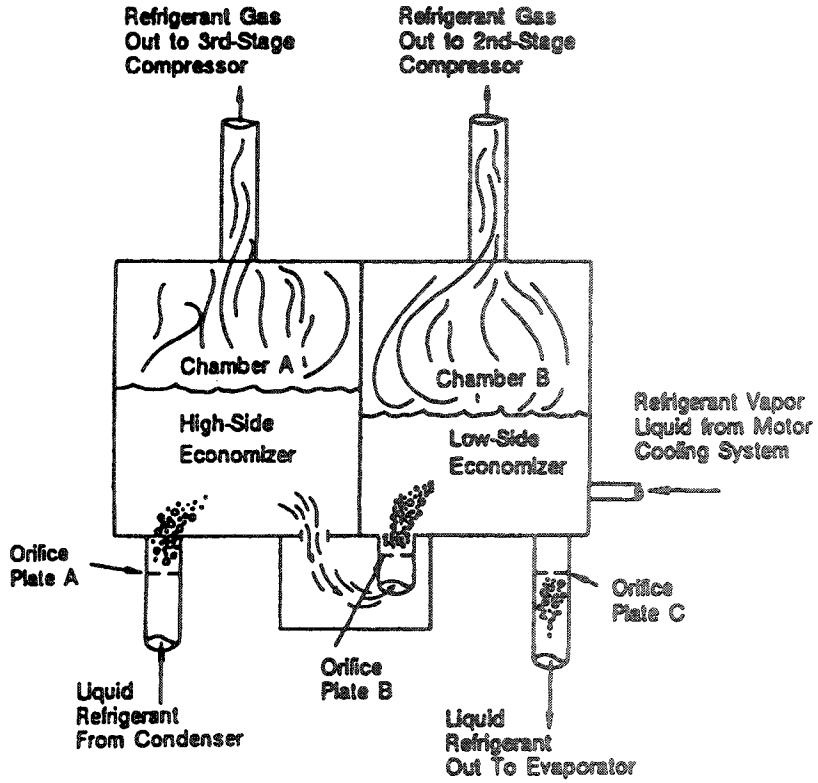

Units With Refrigeration Pump

Compressor Lubrication System - CVHE and CVHG

A schematic diagram of the compressor lubrication system is illustrated in Figure 4 for the CVHE and CVHG.

Oil is pumped from the oil tank (i.e., by a pump and motor located within the tank) through an oil pressure-regulating valve designed to maintain a net oil pressure of 18 to 22 psid. It is then filtered and sent to the oil cooler located in the Economizer and on to the bearings.

From the bearings, the oil drains back to the manifold under the motor and then on to the oil tank.

⚠ WARNING
SURFACE TEMPERATURES MAY EXCEED 150°F. Use caution while working on certain areas of the unit, failure to do so may result in death or personal injury.

To ensure proper lubrication and prevent refrigerant from condensing in the oil tank, a 750-watt heater is immersed in the oil tank and is used to warm the oil while the unit is off. When the unit starts, the oil heater is de-energized. This heater energizes as needed to maintain 140° to 145° F (60-63 C) when the chiller is not running.

When the chiller is operating, the temperature of the oil tank is typically 115° to 160°F (46-72 C). The oil return lines from the thrust and journal bearings, transport oil and some seal leakage refrigerant. The oil return lines are routed into a manifold under the motor. Gas flow exits the top of the manifold and is vented to the Evaporator. A vent line solenoid is not needed with the refrigerant pump. Oil exits the bottom of the manifold and returns to the tank. Separation of the seal leakage gas in the manifold keeps this gas out of the tank.

A duel eductor system is used to reclaim oil from the suction cover and the evaporator, and deposit it back into the oil tank. these eductors use high pressure condenser gas to draw the oil from the suction cover and evaporator back to the eductors and then discharged into the oil tank. The evaporator eductor line has a shut off valve mounted by the evaporator and ships with two turns open.

Liquid refrigerant is used to cool the oil supply to both the Thrust bearing and Journal bearings. On refrigerant pump units the oil cooler is located inside the economizer and uses refrigerant passing from the condenser to evaporator to cool the oil . Oil leaves the oil cooler and flows to both the thrust and journal bearings.

Motor Cooling System

Compressor motors are cooled with liquid refrigerant, see Figure 4.

The refrigerant pump is located on the front of the oil tank (motor inside the oil tank). the refrigerant pump inlet is connected to the well at the bottom of the condenser. The connection is on the side where a weir assures a preferential supply of liquid. refrigerant is delivered to the motor via the pump. Motor refrigerant drain lines are routed to the condenser.

Figure 4
CVHE and CVHG with Refrigerant Pump

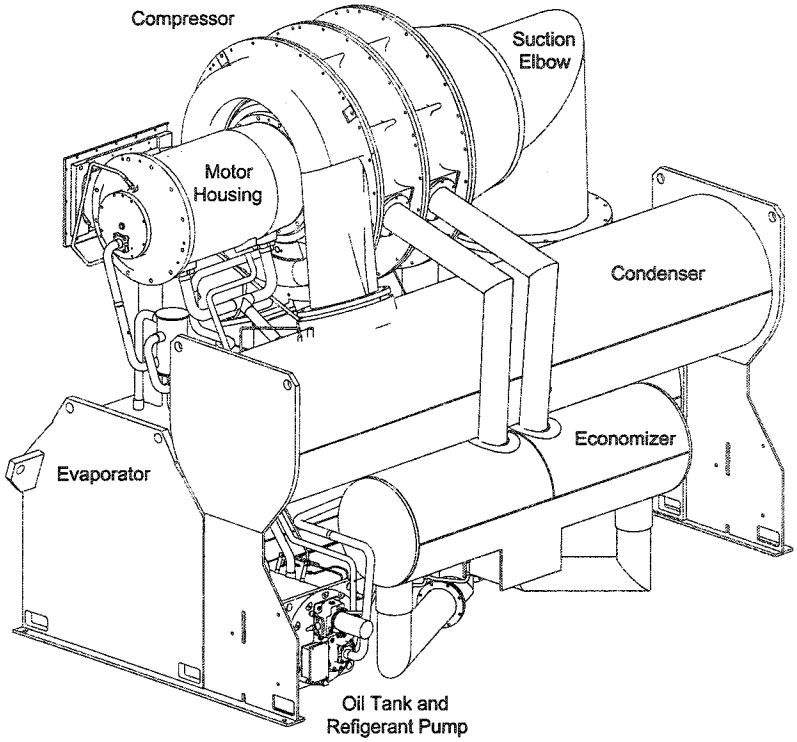

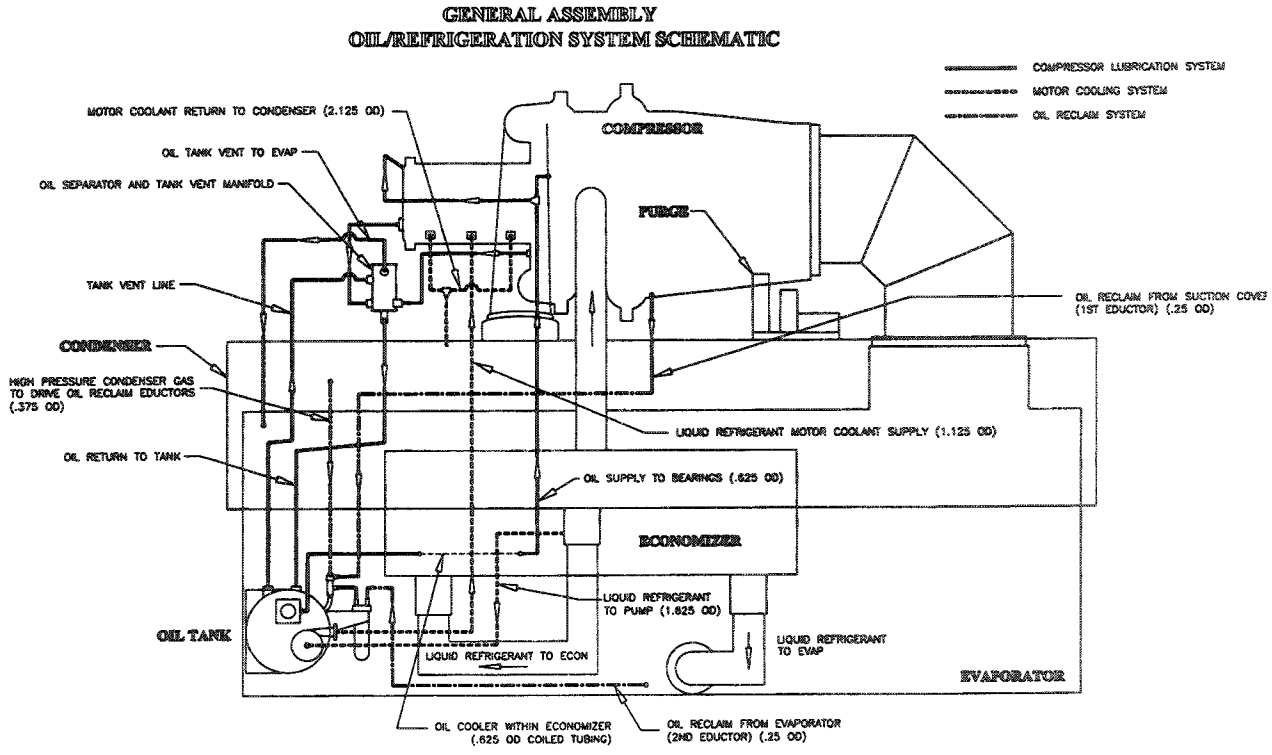

Mechanical Operation - CVHF

Overview

THE FOLLOWING DESCRIPTION APPLIES TO THE TRANE MODEL CVHF CENTRIFUGAL CHILLER ONLY. Refer to the appropriate operation manual for refrigeration cycle descriptions of other models.

Each CVHF unit is composed of 5 basic components:

-- the evaporator
-- 2 stage compressor
-- water-cooled condenser
-- single-stage economizer
-- related interconnecting piping

A heat-recovery or auxiliary condenser can be factory-added to the basic unit assembly to provide a heat-recovery cycle.

Figure 5 illustrates the general component layout of a typical CVHF chiller.

CVHF cooling-only and heat recovery modes of operation are described in the following sections. A pressure/enthalpy diagram is provided in Figure 6 to further illustrate unit operation.

Cooling-Only Cycle

When the CVHF is functioning in the cooling mode, liquid refrigerant is distributed along the length of the evaporator and sprayed through small holes in a distributor (i.e., running the entire length of the shell) to uniformly coat each evaporator tube. Here, the liquid refrigerant absorbs enough heat from the system water circulating through the evaporator tubes to vaporize.

The gaseous refrigerant is then drawn through the eliminators (which remove droplets of liquid refrigerant from the gas), first-stage variable inlet guide vanes, and into the first-stage impeller.

Note: Inlet guide vanes are designed to modulate the flow of gaseous refrigerant to meet system capacity requirements; they also prerotate the gas allowing it to enter the impeller at an optimal angle that maximizes efficiency at all load conditions.

Compressed gas from the first-stage impeller is discharged through the second-stage variable guide vanes and into the second-stage impeller. Here, the refrigerant gas is again compressed, and then discharged into the condenser.

Baffles within the condenser shell distribute the compressed refrigerant gas evenly across the condenser tube bundle. Cooling tower water, circulated through the condenser tubes, absorbs heat from the refrigerant, causing it to condense. The liquid refrigerant then flows out of the bottom of the condenser, passing through an orifice plate and into the economizer.

The economizer reduces the energy requirements of the refrigerant cycle by eliminating the need to pass all gaseous refrigerant through both stages of compression. See Figure 7. Notice that some of the liquid refrigerant flashes to a gas because of the pressure drop created by the orifice plate, thus further cooling the liquid refrigerant. This flash gas is then drawn directly from the economizer into the second-stage impellers of the compressor. All remaining liquid refrigerant flows out of the economizer, passes through another orifice plate and into the evaporator.

Note: See Figure 8 for a unit with Refrigerant pump.

Figure 5
General CVHF Components

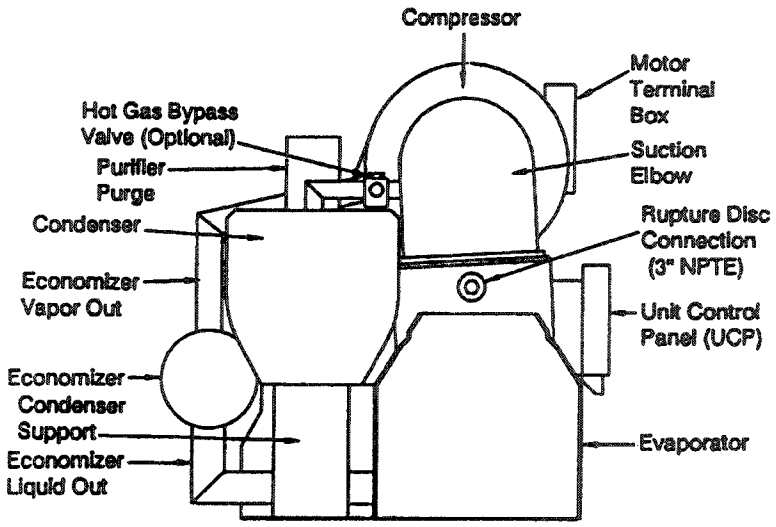

Figure 6
CVHF Pressure Enthalpy Curve

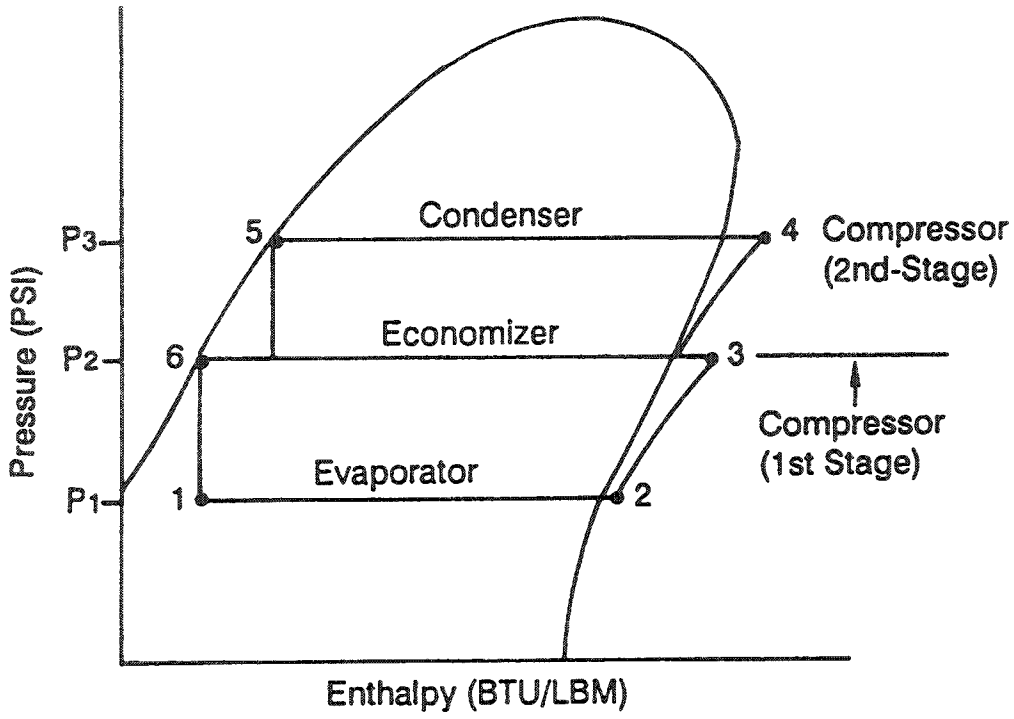

Figure 7
CVHF Economizer Operation

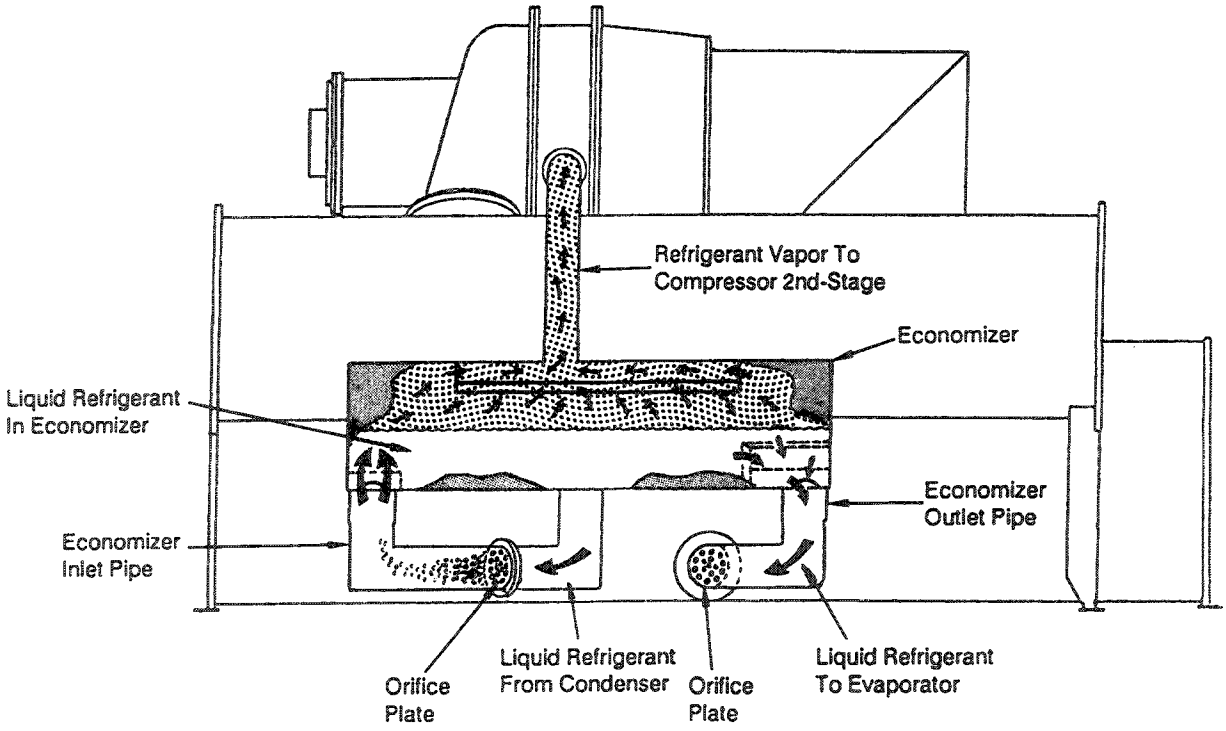

Figure 8 - CVHF Unit With Refrigerant Pump

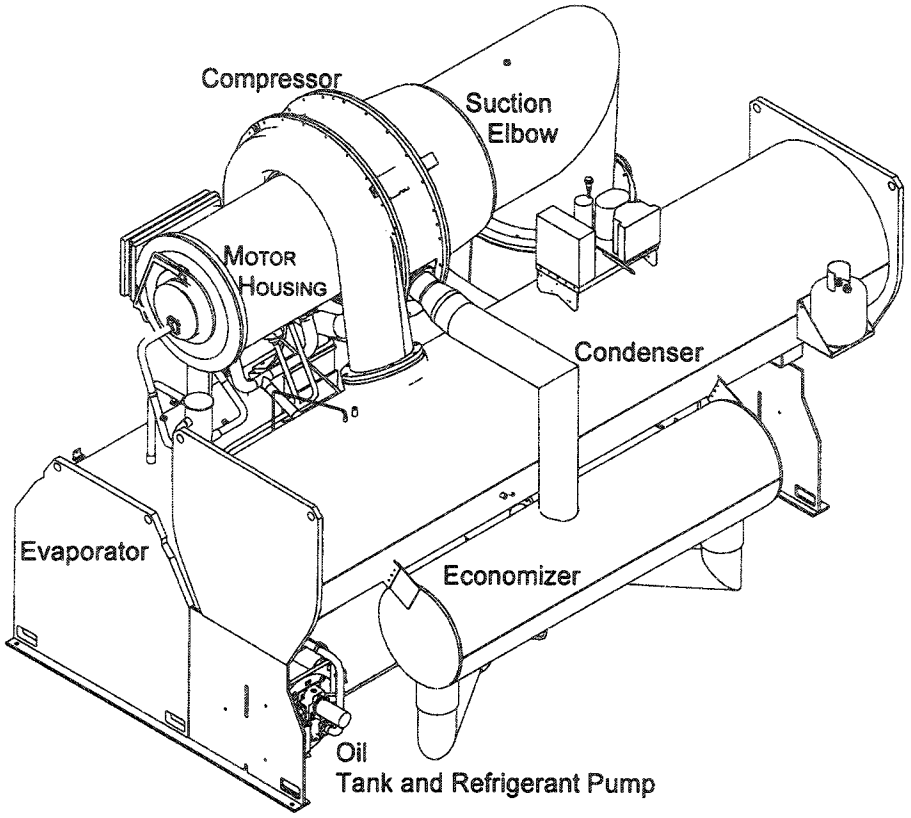

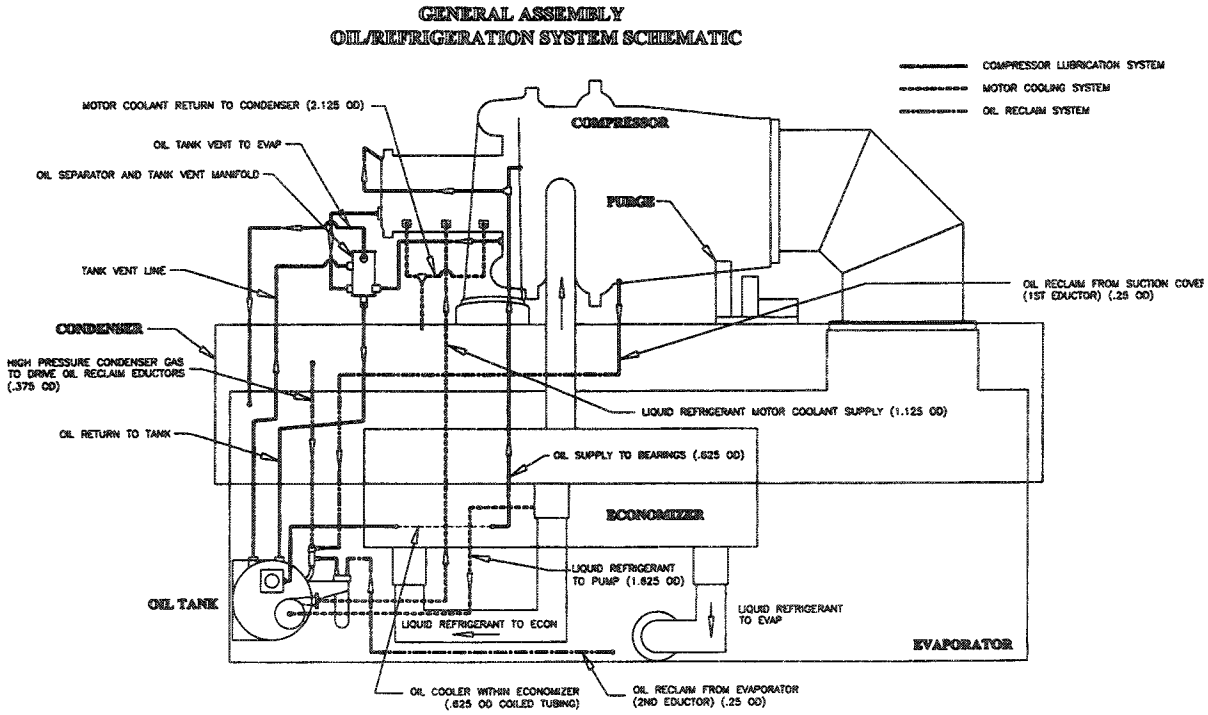

CVHF Units With Refrigerant Pump

Compressor Lubrication System - CVHF

A schematic diagram of the compressor Refrigerant/Oil lubrication system is illustrated in Figure 8 for the CVHF.

Oil is pumped from the oil tank through an oil pressure regulating valve designed to maintain a net oil pressure of 18 to 22 psid. It is then filtered and sent to the oil cooler and on to the bearings.

From the bearings, the oil drains back to the manifold under the motor and then on to the oil tank.

⚠ WARNING

SURFACE TEMPERATURES MAY EXCEED 150 F. USE CAUTION WHILE WORKING ON CERTAIN AREAS OF THE UNIT, FAILURE TO DO SO MAY RESULT IN DEATH OR PERSONAL INJURY.

To ensure proper lubrication and prevent refrigerant from condensing in the oil tank, a 750 watt heater is immersed in the oil tank and is used to warm the oil while the unit is off. When the unit starts, the oil heater is de energized. This heater energizes as needed to maintain 140 F to 145 F (60 to 63 C) when the chiller is not running.

When the chiller is operating, the temperature of the oil tank is typically 115 F to 160 F (46 to 72 C). The oil return lines from the thrust and journal bearings, transport oil and some seal leakage refrigerant. The oil return lines are routed into a manifold under the motor. Gas flow exits the top of the manifold and is vented to the Evaporator. A vent line solenoid is not needed with the refrigerant pump. Oil exits the bottom of the manifold and returns to the tank. Separation of the seal leakage gas in the manifold keeps this gas out of the tank.

A dual eductor system is used to reclaim oil from the suction cover and the evaporator, and deposit it back into the oil tank. These eductors use high pressure condenser gas to draw the oil from the suction cover and evaporator back to the eductors and then discharged into the oil tank. The evaporator eductor line has a shut off valve mounted by the evaporator and ships with two turns open.

Liquid refrigerant is used to cool the oil supply to both the Thrust bearing and Journal bearing on larger units (360 ton and larger). On refrigerant pump units the oil cooler is located inside the economizer and uses refrigerant passing from the condenser to evaporator to cool the oil. Oil leaves the oil cooler and flows to both the thrust and journal bearings.

Motor Cooling System

Compressor motors are cooled with liquid refrigerant, See Figure 8.

The refrigerant pump is located on the front of the oil tank (motor inside the oil tank). The refrigerant pump inlet is connected to the well at the bottom of the condenser. The connection is on the side where a weir assures a preferential supply of liquid. Refrigerant is delivered to the motor via the pump and delivered to the same connection as used on units without the refrigerant pump. Motor refrigerant drain lines are routed to the condenser.

Free Cooling Cycle CVHE, CVHF and CVHG

Based on the principle that refrigerant migrates to the coldest area in the system, the free cooling option adapts the basic chiller to function as a simple heat exchanger. However, it does not provide control of the leaving chilled water temperature.

If condenser water is available at a temperature lower than the required leaving chilled water temperature, the operator manually stops the compressor and starts the free cooling cycle by enabling the Free cooling mode in the "Operator Settings" Group of the Human Interface.

Several components must be factory-supplied or field-installed to equip the unit for free cooling operation:

-- options module 1U5

-- a refrigerant gas line, including an electrically-actuated shutoff valve, between the evaporator and condenser;

-- a valve liquid return line, including an electrically-actuated shutoff valve, between the condenser sump and the evaporator;

-- a liquid refrigerant storage vessel; and,

-- additional refrigerant.

When the chiller operator initiates changeover to the free cooling mode, the compressor will shut down if running, the shutoff valves in the liquid and gas lines open; UCP (i.e., unit control panel) control logic prevents the compressor from energizing during free cooling. Liquid refrigerant then drains (by gravity) from the storage tank into the evaporator and floods the tube bundle.

Since the temperature and pressure of the refrigerant in the evaporator are higher than in the condenser (i.e., because of the difference in water temperature), the refrigerant in the evaporator vaporizes and travels to the condenser. Cooling tower water causes the refrigerant to condense, and it flows (again, by gravity) back to the evaporator.

This compulsory refrigerant cycle is sustained as long as a temperature differential exists between condenser and evaporator water. The actual cooling capacity provided by the free cooling cycle is determined by the difference between these temperatures which, in turn, determines the rate of refrigerant flow between the evaporator and condenser shells.

If the system load exceeds the available free cooling capacity, the operator must manually initiate changeover to the mechanical cooling mode by disabling the free cooling mode in the "Operator Settings" Group of the Human Interface. The gas and liquid line valves then close and compressor operation begins. Refrigerant gas is drawn out of the evaporator by the compressor, where it is then compressed and discharged to the condenser.

Most of the condensed refrigerant initially follows the path of least resistance by flowing into the storage tank. This tank is vented to the economizer sump through a small bleed line; when the storage tank is full, liquid refrigerant must flow through the bleed line restriction. Because the pressure drop through the bleed line is greater than that of the orifice flow control device, the liquid refrigerant flows normally from the condenser through the orifice system and into the economizer.

Note: During changeover from free cooling to mechanical cooling, the refrigerant transfer process is completed within three minutes. The micro-computer-based control system prevents carry-over by not allowing the unit to load for a period of two minutes.

Heat Recovery Cycle

"Heat recovery" is designed to salvage the heat that is normally rejected to the atmosphere through the cooling tower, and put it to beneficial use.

For example, a high-rise office building may require simultaneous heating and cooling during the winter months. With the addition of a heat recovery cycle, heat removed from the building cooling load can be transferred to areas of the building that require heat. (Keep in mind that the heat recovery cycle is only possible if a cooling load exists to act as a heat source.)

To provide a heat recovery cycle, a heat-recovery condenser is added to the unit; see Figure 2. Though physically identical to the standard cooling condenser, the heat-recovery condenser is piped into a heat circuit rather than to the cooling tower.

During the heat recovery cycle, the unit operates just as it does in the "cooling only" mode except that the cooling load heat is rejected to the heating water circuit rather than to the cooling tower water circuit.

When hot water is required, the heating water circuit pumps energize. Water circulated through the heat-recovery (or auxiliary) condenser tube bundle by the pumps absorbs cooling-load from the compressed refrigerant gas discharge by the compressor. The heated water is then used to satisfy heating requirements.

Auxiliary Condensers

Unlike the heat-recovery condenser (which is designed to satisfy comfort heating requirements), the auxiliary condenser serves a preheat function only, and is used in those applications where hot water is needed for use in kitchens, lavatories, etc. While the operation of the auxiliary condenser is physically identical to that of the heat-recovery condenser, it is comparatively smaller in size, and its heating capacity is not controlled.

Trane does not recommend operating the auxiliary condenser alone because of its small size.

Ice Machine Control

UCP2 provides a service level "Enable/Disable" menu entry for the Ice Building feature when the Ice Building option is installed. UCP2 will accept either an isolated contact closure (J3, 7 & 8 on the options module) or a remote communicated input (Tracer) to initiate the ice building mode where the unit runs fully loaded at all times. Ice building will be terminated either by opening the contact or based on entering evaporator water temperature. UCP2 will not permit the Ice Building mode to be entered again until the unit is switched to the Non-ice building mode and back into the ice building mode. It is not acceptable to reset the chilled water setpoint low to achieve a fully loaded compressor.

When entering ice-building the compressor will be loaded at its maximum rate and when leaving ice building the compressor will be unloaded at its maximum rate. While loading and unloading the compressor, all surge detection will be ignored.

While in the ice building mode, current limit setpoints less than the maximum will be ignored. Ice Building can be terminated by one of the following means:

1. Opening the external Ice Contacts/Remote communicated input (Tracer).

2. Satisfying an evaporator entering water temperature setpoint.

3. Surging for 15 minutes at full open IGV.

Base Loading

Tracer Base Loading:

Current Setpoint Range:
(20 - 100) % RLA

The tracer commands the chiller to enter the base load mode by setting the base load mode request bit to 1. If the chiller is not running, it will start regardless of the differential to start (either chilled water or hot water). If the chiller is already running, it will continue to run regardless of the differential to stop (either chilled water or hot water), using the base load control algorithm. While the unit is running in base loading, it will report that status back to the tracer by setting "Base Load Status = true" in the Tracer Status Byte. When the tracer removes the base load mode request (sets the bit to 0). The unit will continue to run, using the normal chilled or hot water control algorithm, and will turn off, only when the differential to stop has been satisfied.

External Base Loading:

Current Setpoint Range:
(20 - 100) % RLA

The chiller module accepts 2 inputs to work with external base loading. The first input is on chiller module terminals J7-1 and J7-2. This input looks for a switch closure to enter the base-loading mode. The second input is found on chiller module terminals J7-11 and J7-12. This input selects the base loading setpoint, and can be controlled by either a 2-10Vdc or 4-20ma Signal. To use a 2-10Vdc input, dip switch 2-1 should be in the 'OFF' position. To use a 4-20mA input, dip switch 2-1 should be in the 'ON' Position. You must also set the correct input type in the Machine Configuration menu. This menu is titled "External Setpoints Input". The graphs in Figure 9 show the relationship between input and % RLA.

While in base loading the active current limit setpoint is set to the tracer or external base load setpoint, providing that the base load setpoint is not equal to 0 (or out of range). If it is out of range, the front panel current limit setpoint is used. During base loading, all limits are enforced with the exception of current limit. The human interface displays the message "Unit is Running Base Loaded". Hot Gas Bypass is not run during base loading. If base loading and ice making are commanded simultaneously, ice making takes precedence.

Base Loading Control

Algorithm:

Base Loading Control is basically a variation of the current limit algorithm. During base loading, the leaving water control algorithm provides a 1250 step load command every 5 seconds. The current limit routine limits the loading when the current is below setpoint. When the current is within the deadband of the setpoint the current limit algorithm holds against this loading command. If the current exceeds the setpoint, the current limit algorithm unloads. The "Capacity Limited By High Current" message normally displayed while the current limit routine is active is suppressed while base loading.

Unit Mounted Refrigerant Monitor

Refer to RMWD-IOM-1D or the most current revision. This can be obtained from the nearest Trane office in your area.

Unit Mounted Adaptive Frequency™ Drive

The AFDB, is a water-cooled pulse width modulated inverter. The function of the inverter is to change a DC input voltage to a symmetrical AC output voltage of desired magnitude and frequency. It is designed for 460/480-volt application. Circuit breakers, surge capacitors and ground faults are standard on all AFDB units. The CTV unit control panel has full control of the AFDB unit operation, including the start/stop functions. AFDB-OM-1C (or most recent revision) covers the features and specifications of the Trane Adaptive Frequency drive.

Figure 9
Base Loading with External mA Input and with External Voltage Input

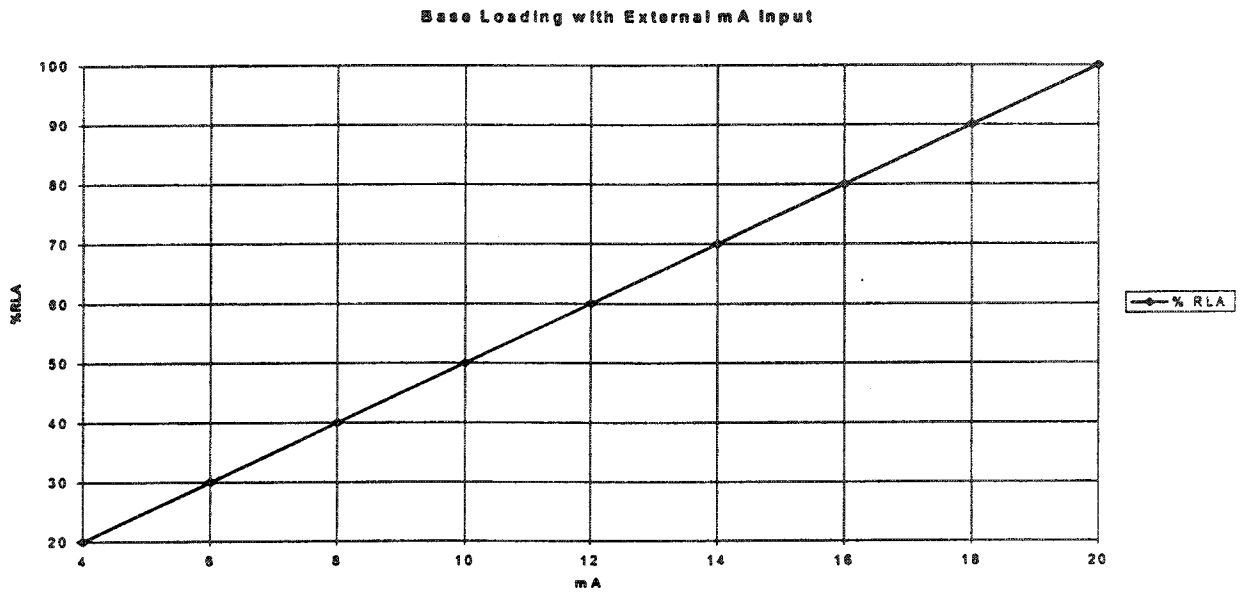

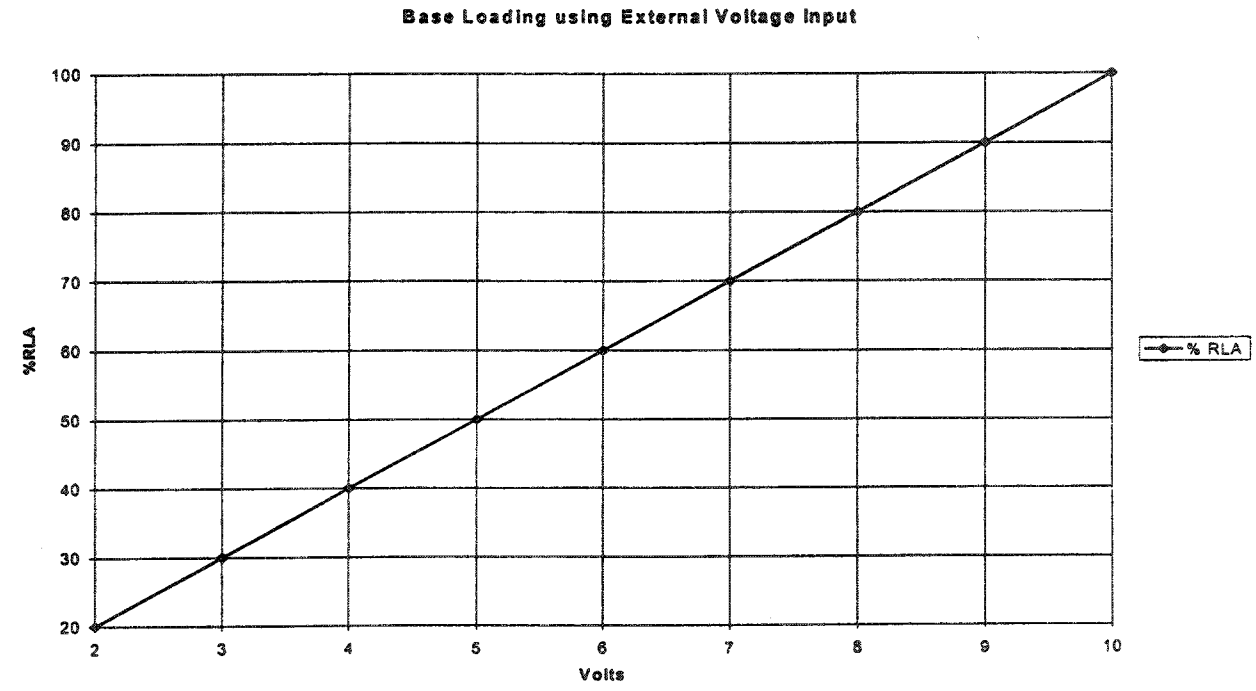

Unit Control Panel

The UCP2 control, see Figure 10, consists of a modular design partitioned by major function or group of functions. All modules communicate with each other through the IPC circuit.

Major components within each of these control groups are described below.

Unit-mounted temperature sensors, pressure transducers and functional switches provide analog and binary inputs to the various modules.

The "microcomputer-based" modules are described below. All wiring to the modules are to pluggable terminal blocks.

Chiller Module (1U1)

The Chiller Module, located in the UCP2 control panel, is the "Master" of the chiller communicating commands to other modules and collecting data, status and diagnostic information from the other modules over the IPC (Inter Processor Communications) link. The Chiller Module performs the Leaving Chilled Water Temperature and Limit Control Algorithms arbitrating capacity against any operating limit the chiller may find itself working against. The Chiller module contains non-volatile memory both checking for valid set points and retaining them on any power loss.

Inputs and outputs are chilled water system level inputs and outputs including evaporator and condenser water temperatures, outdoor air temperature, evaporator and condenser water pump control, status and alarm relays, external auto-stop, emergency stop, evaporator and condenser water pressure drops and evaporator and condenser water flow switches. Connection points of standard and optional inputs and outputs for the chiller module (1U1) are shown in Figure 11.

For more information regarding the UCP2 control module screens, refer to CVHE-CLD-1A or later revision, which is the Clear Language Display manual that ships with CVHE, CVHF and CVHG units from the factory. This manual also may be obtained from the nearest Trane office.

Figure 10
UCP2 Control Panel

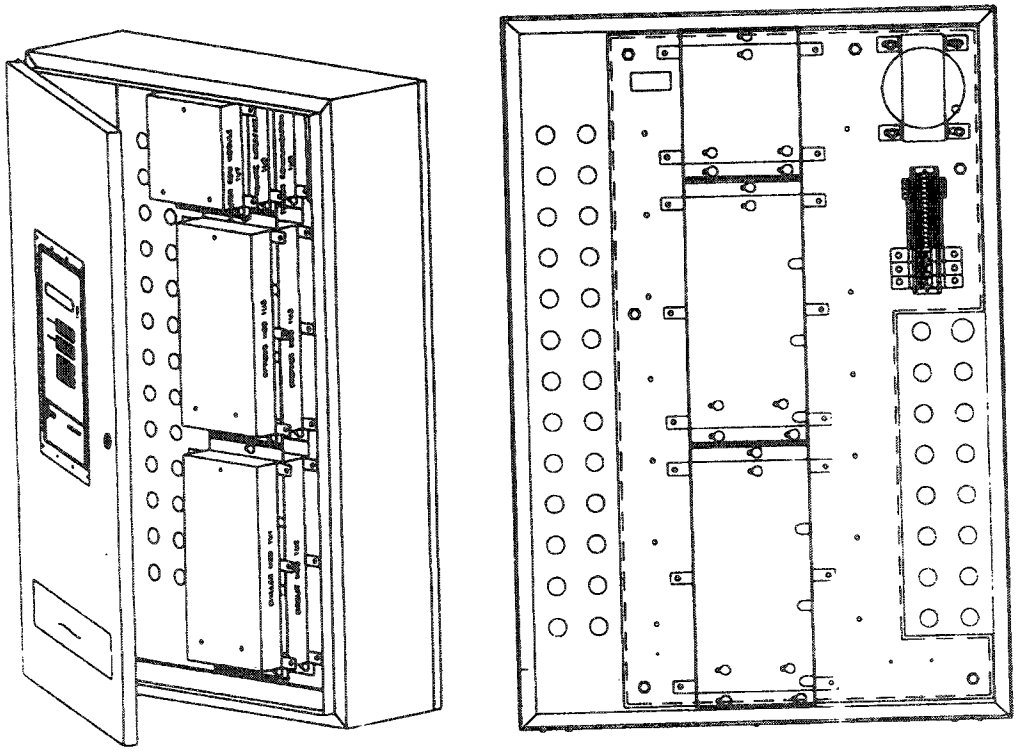

Figure 11 - Chiller Module (1U1) - CVHE, CVHF and CVHG

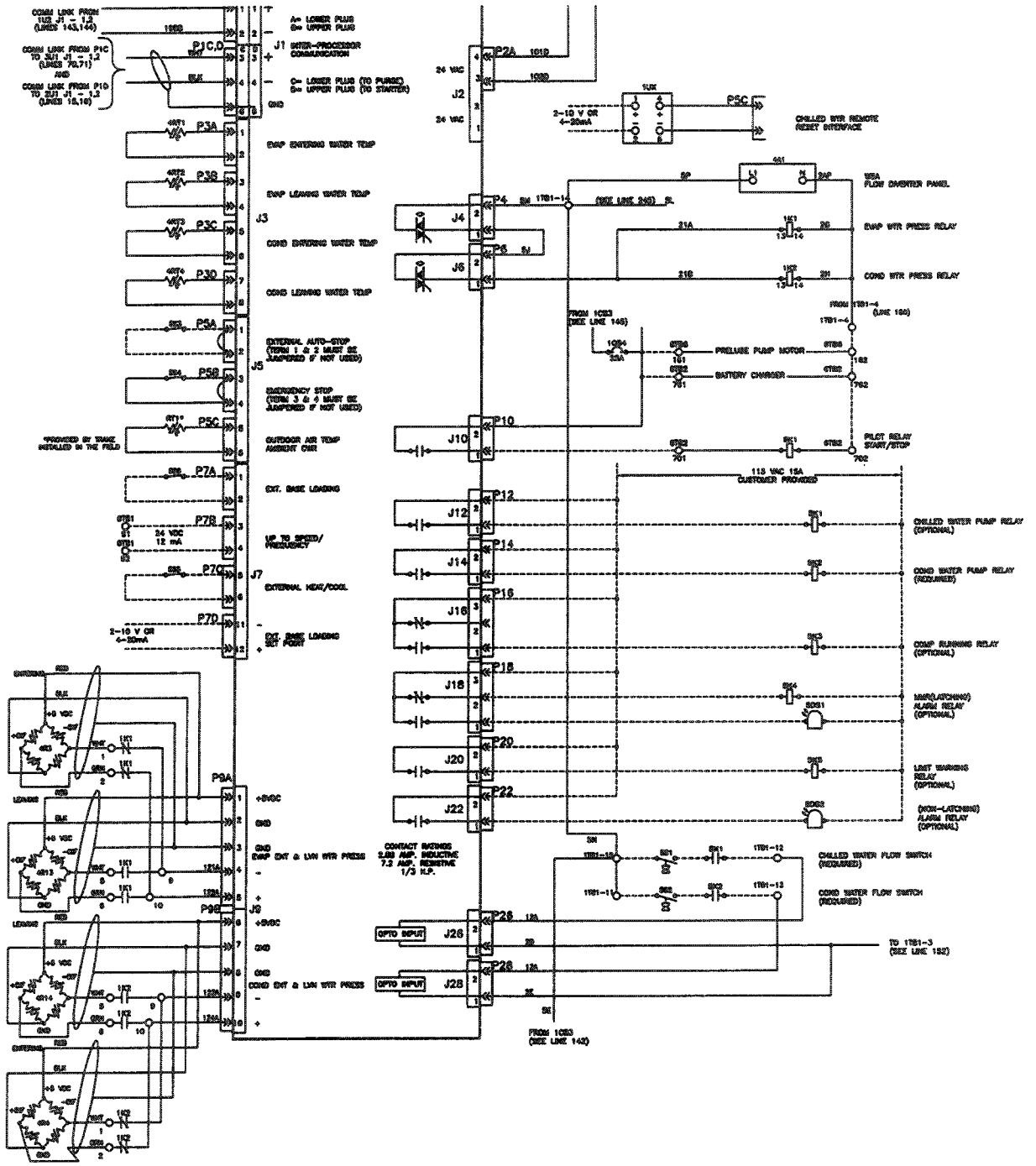

Circuit Module (1U2)

The Circuit Module serves as an input/output expander and has inputs and outputs associated with motor, refrigerant and lubrication functions. These include, motor winding temperatures, oil temperature, refrigerant monitor connection, optional condenser refrigerant pressure, oil sump pressure, oil pump discharge pressure, vent line valve operation, oil tank heater operation, oil pump and oil pump/refrigerant pump on units with the refrigerant pump.

Note: The oil heater no longer needs to run when the unit is running. When the unit is OFF, the heater will be ON.

You will notice that the oil sump may run colder when the unit is running and the oil heater is OFF. The oil sump temperature will operate at oil saturated evaporator temp plus 30° F (16.6°C).

Connection points of inputs and outputs for the Circuit Module (1U2) are shown in Figure 18.

Figure 18 shows Circuit Module with a Refrigerant Pump.

Stepper Module (1U3)

Note: The CVHF 1470/1720 Stepper Module drives two actuators, one for each compressor stage. The Stepper Module determines the direction and distance to drive the second actuator based on the Chiller Module's command to drive the First Actuator.

The Stepper Module drives the stepper motor inlet guide vane actuator on CenTraVac® Chillers. The Stepper Module receives from the Chiller Module the direction and distance to drive the inlet guide vanes and then generates the appropriate signals to operate the stepper motor.

The Stepper Module has inputs and outputs used to support functions on the module. These include saturated evaporated refrigerant temperature, bearing temperatures, compressor discharge temperature, inlet guide vane binary position indicator (B.P.I.), and saturated condenser refrigerant temperature.

Connection points of inputs and outputs of the Stepper Module (1U3) are shown in Figure 12 and include CVHF 1470 and 1720.

Clear Language Display Module (1U4)

The Clear Language Display Module, located on the UCP2 control panel door, provides display of chiller data and access to operator/serviceman controls, set points and chiller setup information. All information is stored in non-volatile memory in the Chiller Module. The Clear Language Display and the Chiller Module work together to display and store information requiring non-volatility. The connections to the Clear Language Display Module (1U4) are shown in Figure 13. The front face of the Clear Language Display Module consists of a LCD Display, a LED, and a keypad. The LCD Display presents the operating status of the unit, operating set points, operating conditions, unit configurations, purge operating conditions, diagnostics, unit configuration, and service test in a clear language display.

The LED is red in color and will only be "ON" when a manual reset is required to restore the unit to full operation. The keypad has 16 keys arranged in a 4 c 4 matrix. See CVHE-CLD-1A or latest revision for operation and set-ups on the Clear Language Display.

Options Module (1U5)

The Options Module provides control or interface requirements for a number of options. Features supported by the Options Module include Ice-Making, Heat Recovery, External Chilled Water Setpoint, External Current Limit Setpoint, Free Cooling, Evaporator Differential Water Pressure Drop, Condenser Differential Water, Pressure Drop Percent RLA of Compressor, Tracer Temperature Sensor, Head Relief Request, Maximum Capacity Relay, and Tracer Controlled Relay. Connection points of inputs and outputs of the Options Module (1U5) are shown in Figure 14.

Starter Module (2U1)

The Starter Module located in the Compressor Motor Starter Panel provides control of the starter when starting, running and stopping the motor. The Starter Module provides interface to and control of the Y-Delta, X-Line, P-Reactor, A-Transformer and Solid State Starters; interface to and control of Adjustable Speed Drives is also supported.

The Starter Module also provides protection to both the motor and the compressor in the form of starting and running overload, phase reversal, phase loss, phase unbalance, momentary power loss and compressor surge. Typical wiring connections to the Starter Module are shown in Figures 16 and 17.

Purge Module (3U1)

The Purge Module provides control of the Purge used on CVHE, CVHF and CVHG units. The Purge Module provides all the inputs and Outputs to control the purge, optimizing both purge and chiller efficiency. The Purge Module resides in the purge control panel and communicates with the Chiller Module over the IPC (Inter-Processor Communications Link) uploading setpoints and down loading data and diagnostics. Connection points of the input and outputs to the Purge Module are shown in Figure 15.

Figure 12 - Stepper Control Module (1U3) - CVHE, CVHF and CVHG (Continued on Next Page)

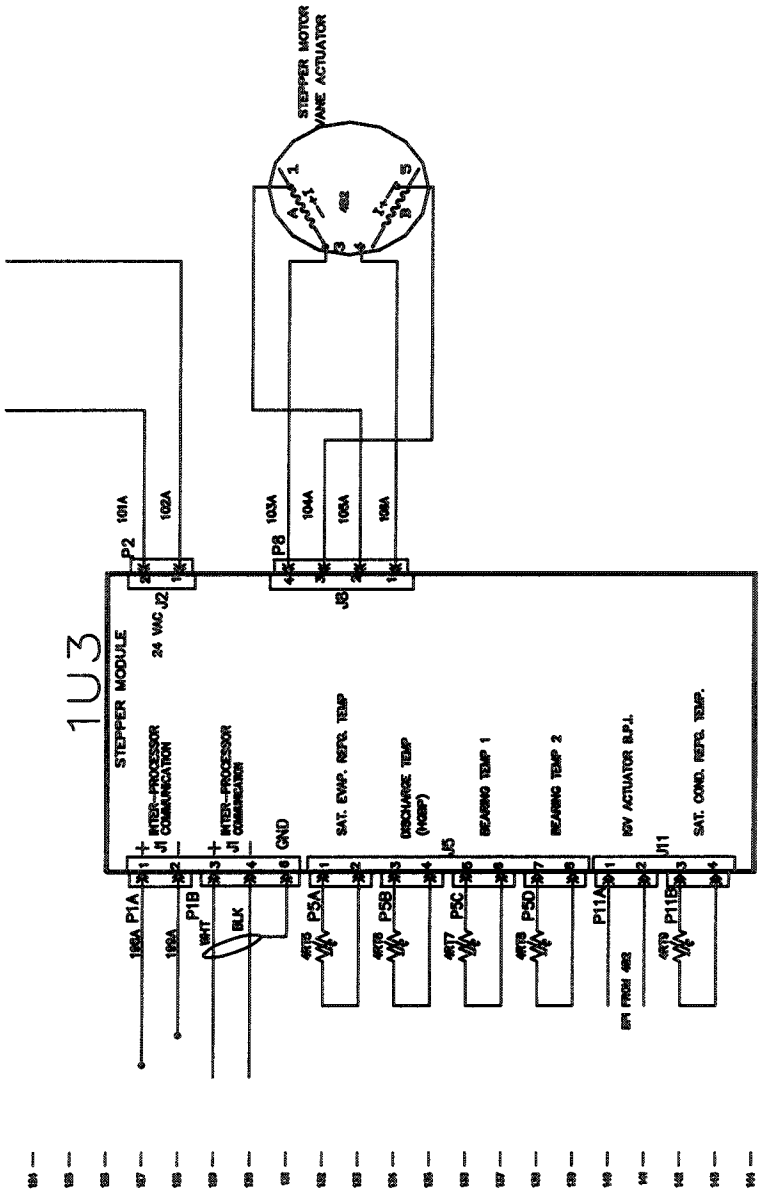

Figure 12 - Stepper Control Module (1U3) - CVHF Models 1470 and 1720

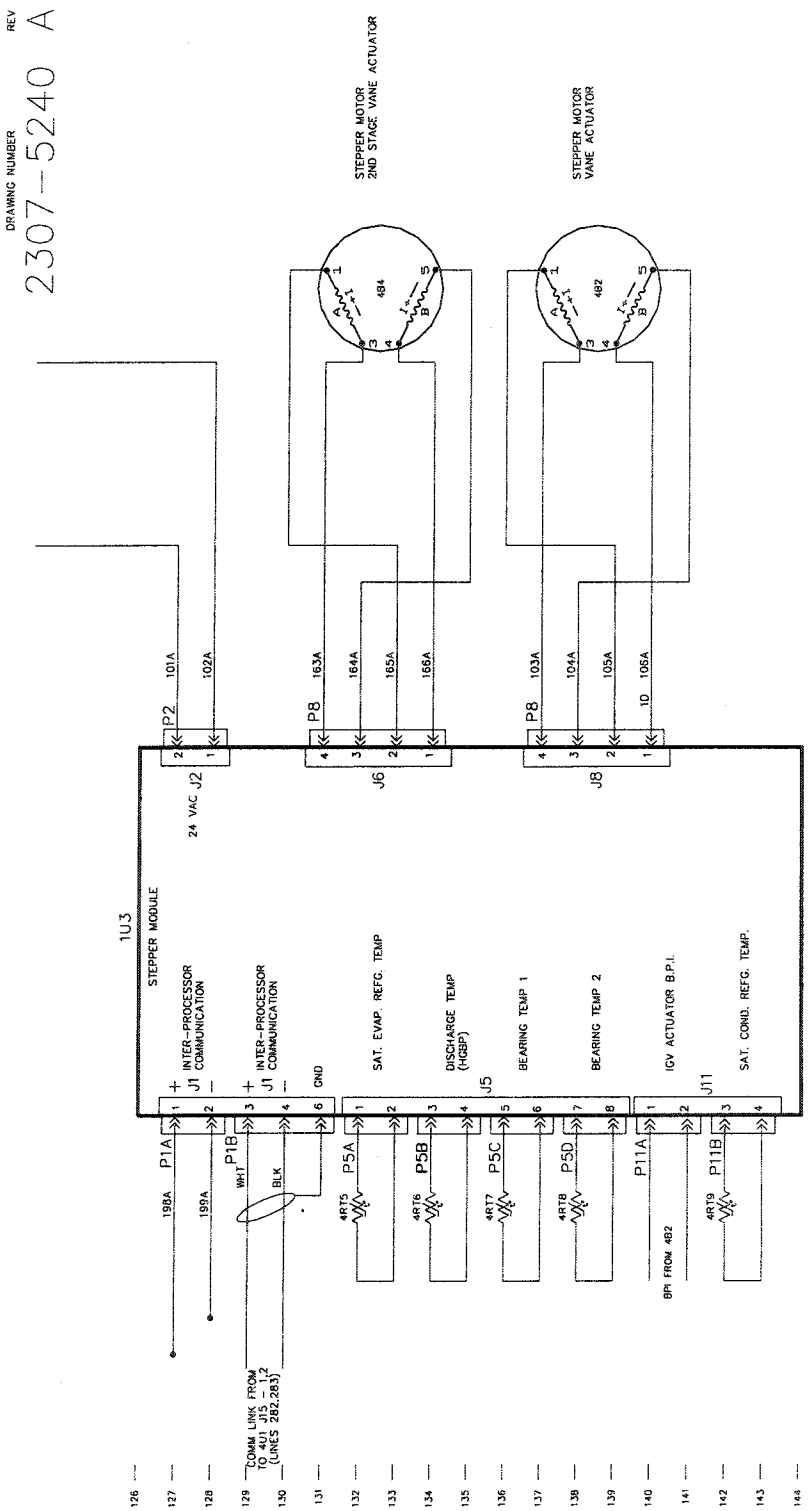

Figure 13 - Clear Language Display Module (1U4) - CVHE, CVHF and CVHG

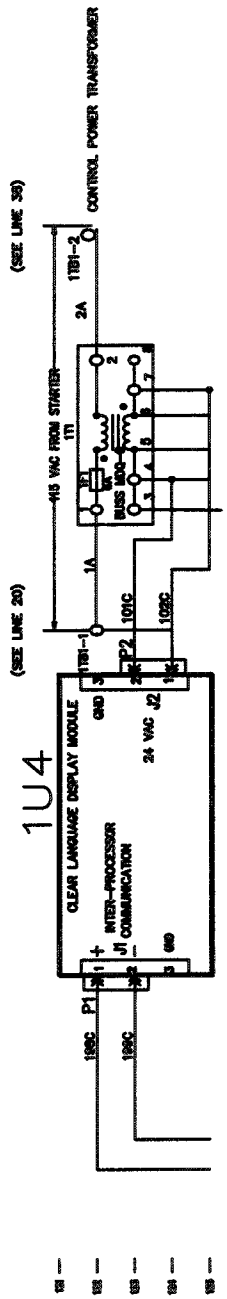

Figure 14 - Options Control Module (1U5) CVHE, CVHF and CVHG

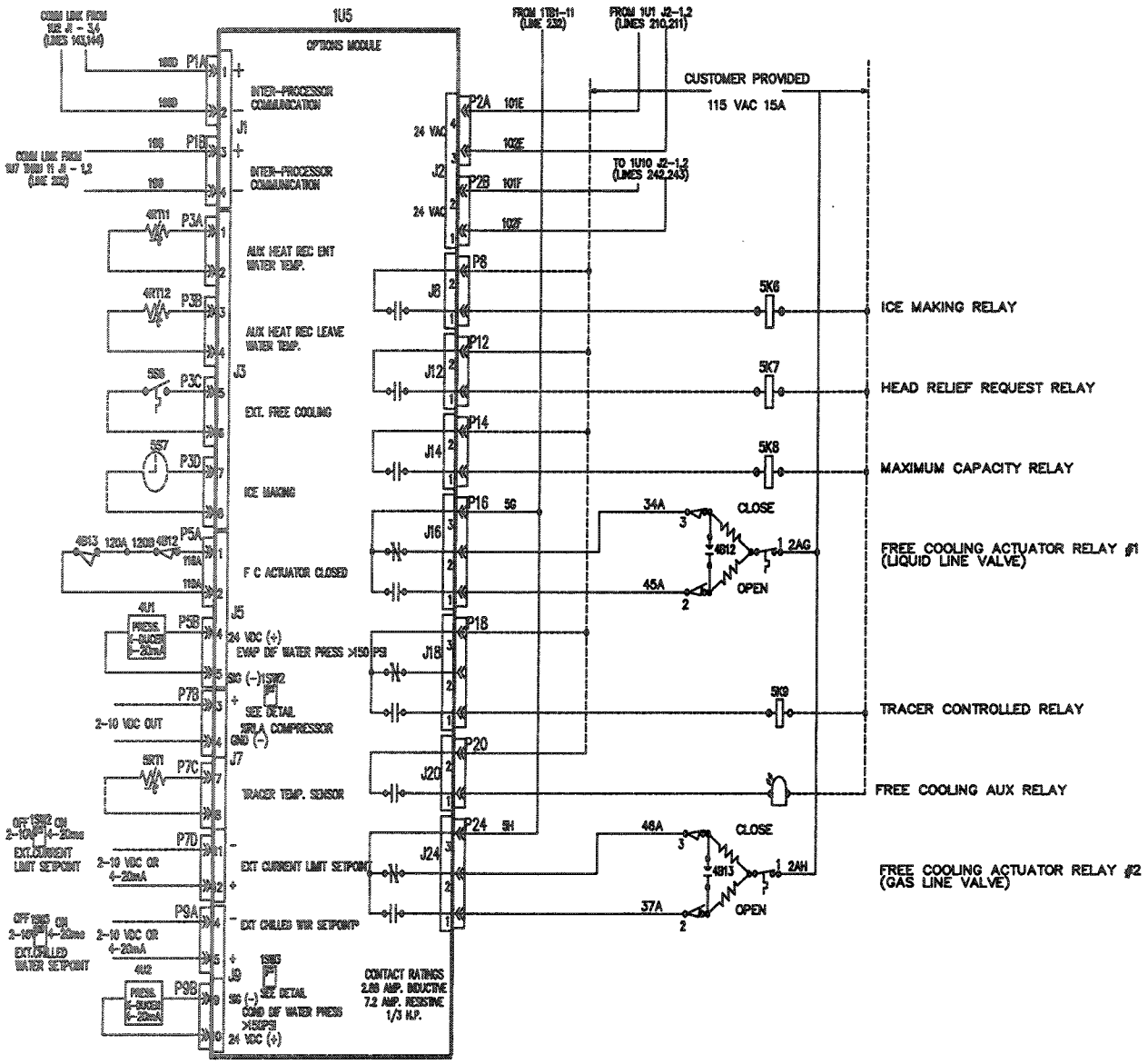

Figure 15 - Purge Module (3U1) - CVHE, CVHF and CVHG

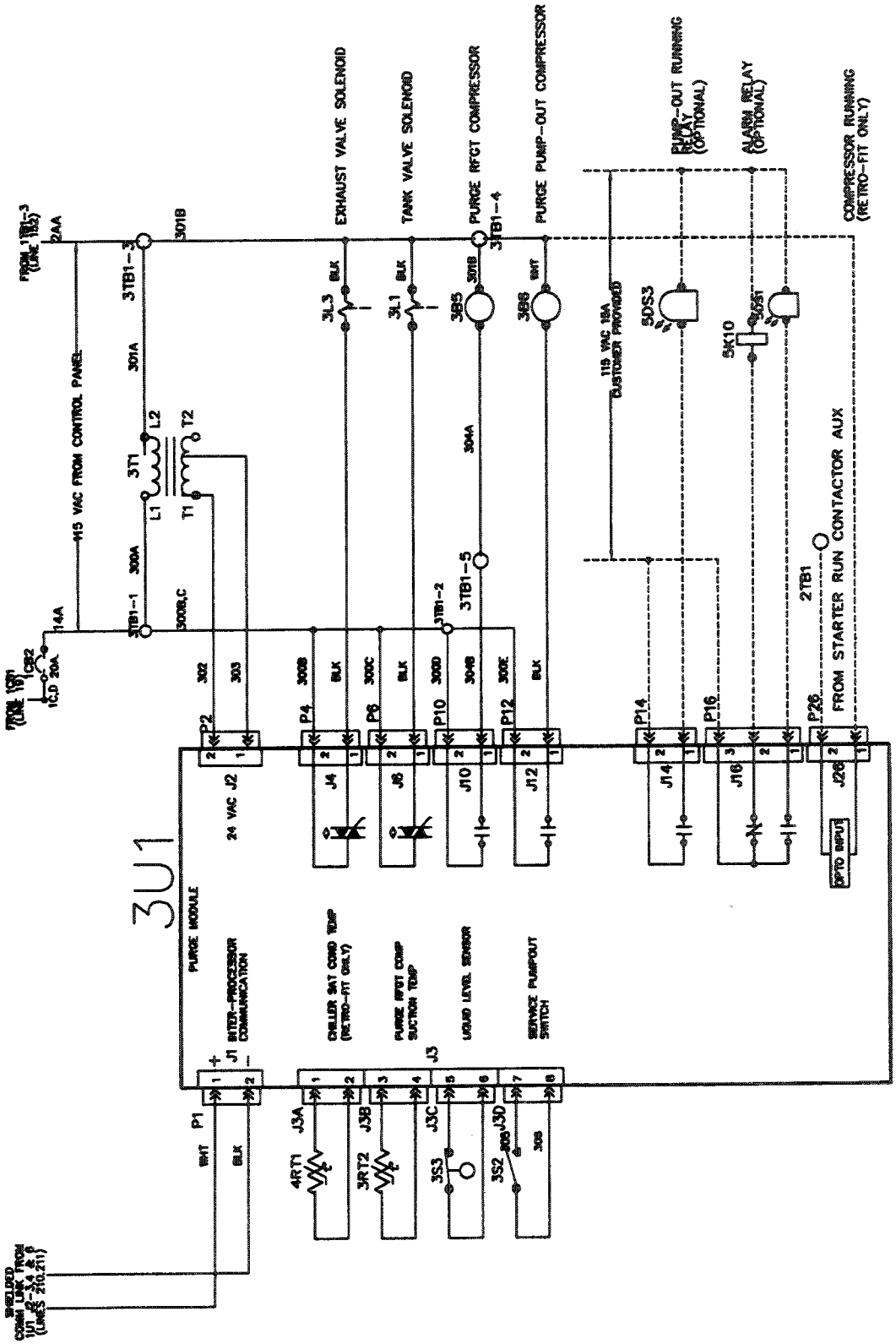

Figure 16 - Customer Supplied Remote Mounted Across the Line Starter

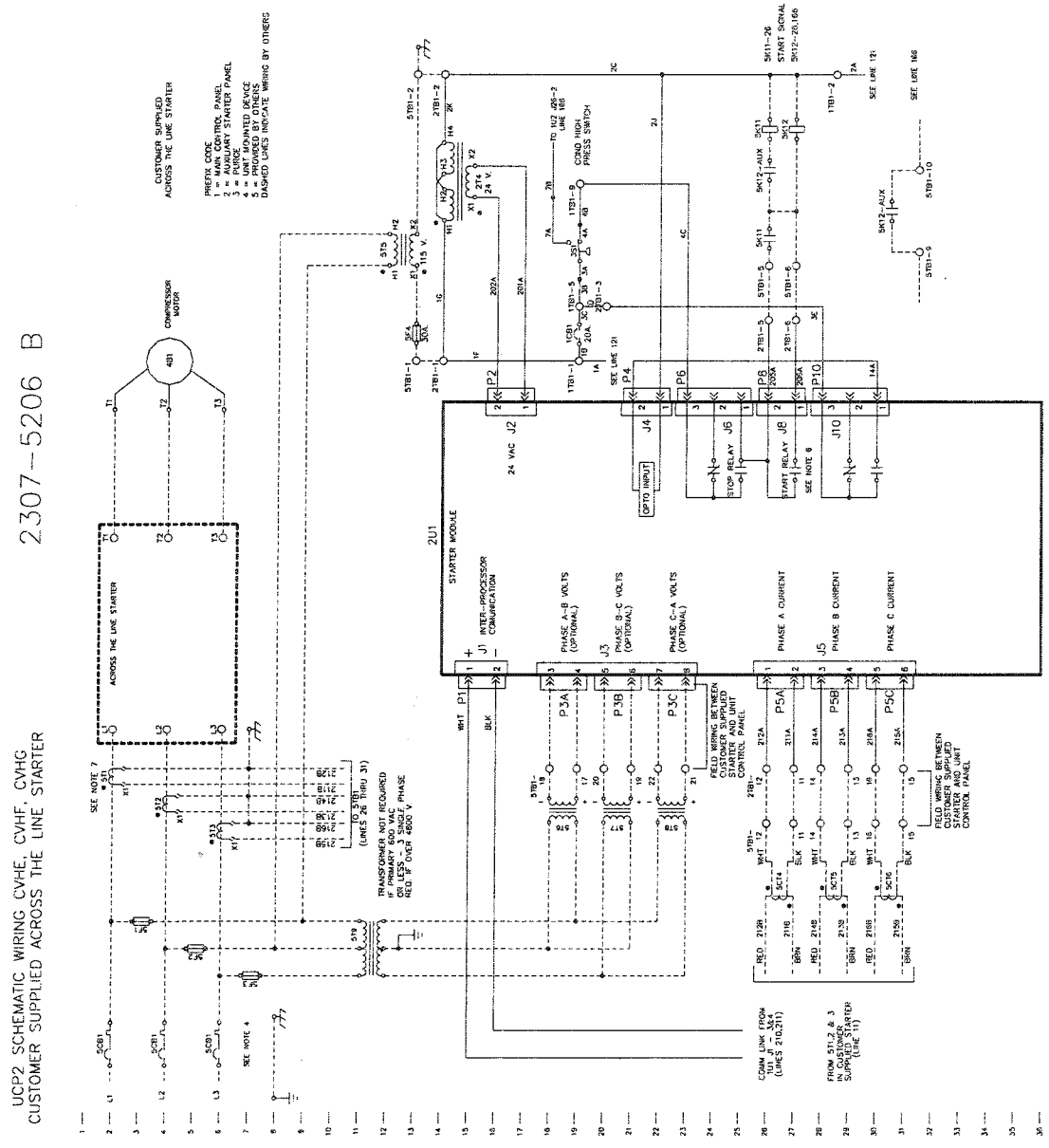

Figure 16 - Continued - Customer Supplied Remote Mounted Across the Line Starter

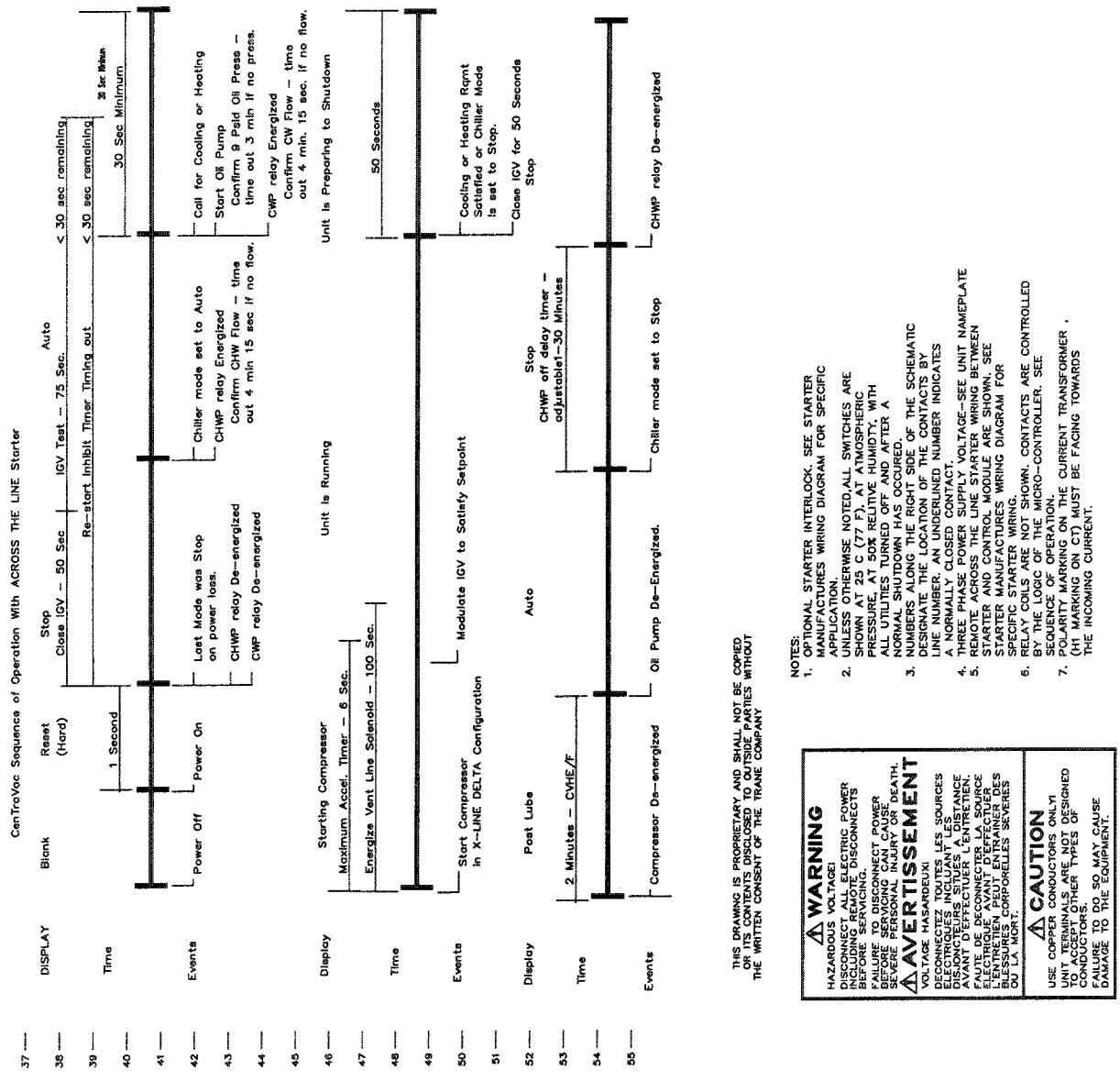

THIS DRAWING IS PROPRIETARY AND SHALL NOT BE COPIED OR ITS CONTENTS DISCLOSED TO OUTSIDE PARTIES WITHOUT THE WRITTEN CONSENT OF THE TRANE COMPANY

NOTES:
1. OPTIONAL STARTER INTERLOCK. SEE STARTER MANUFACTURES WIRING DIAGRAM FOR SPECIFIC APPLICATION.
2. UNLESS OTHERWISE NOTED,ALL SWITCHES ARE SHOWN AT 25 C (77 F), AT ATMOSPHERIC PRESSURE, AT 50% RELATIVE HUMIDITY, WITH ALL UTILITIES TURNED OFF AND AFTER A NORMAL SHUTDOWN HAS OCCURED.
3. NUMBERS ALONG THE RIGHT SIDE OF THE SCHEMATIC DESIGNATE THE LOCATION OF THE CONTACTS BY LINE NUMBER. AN UNDERLINED NUMBER INDICATES A NORMALLY CLOSED CONTACT.
4. THREE PHASE POWER SUPPLY VOLTAGE–SEE UNIT NAMEPLATE
5. REFER TO STARTER MANUFACTURERS WIRING BETWEEN STARTER AND CONTROL MODULE ARE SHOWN. SEE STARTER MANUFACTURES WIRING DIAGRAM FOR SPECIFIC STARTER WIRING.
6. RELAY COILS ARE NOT SHOWN. CONTACTS ARE CONTROLLED BY THE LOGIC OF THE MICRO–CONTROLLER. SEE SEQUENCE OF OPERATION.
7. POLARITY MARKING ON THE CURRENT TRANSFORMER , (H1 MARKING ON CT) MUST BE FACING TOWARDS THE INCOMING CURRENT.

⚠WARNING
HAZARDOUS VOLTAGE!
DISCONNECT ALL ELECTRIC POWER INCLUDING REMOTE DISCONNECTS BEFORE SERVICING.
FAILURE TO DISCONNECT POWER BEFORE SERVICING COULD RESULT IN SEVERE PERSONAL INJURY OR DEATH.

⚠AVERTISSEMENT
VOLTAGE HASARDEUX!
DÉCONNECTEZ TOUTES LES SOURCES ÉLECTRIQUES INCLUANT LES DISJONCTEURS SITUÉS À DISTANCE AVANT D'EFFECTUER L'ENTRETIEN.
FAUTE DE DÉCONNECTER LA SOURCE ÉLECTRIQUE AVANT D'EFFECTUER L'ENTRETIEN PEUT ENTRAINER DES BLESSURES CORPORELLES SÉVERES OU LA MORT.

⚠CAUTION
USE COPPER CONDUCTORS ONLY! UNIT TERMINALS ARE NOT DESIGNED TO ACCEPT OTHER TYPES OF CONDUCTORS.
FAILURE TO DO SO MAY CAUSE DAMAGE TO THE EQUIPMENT.

Figure 17 - Trane Supplied Remote Mounted Wye-Delta Starter Continued

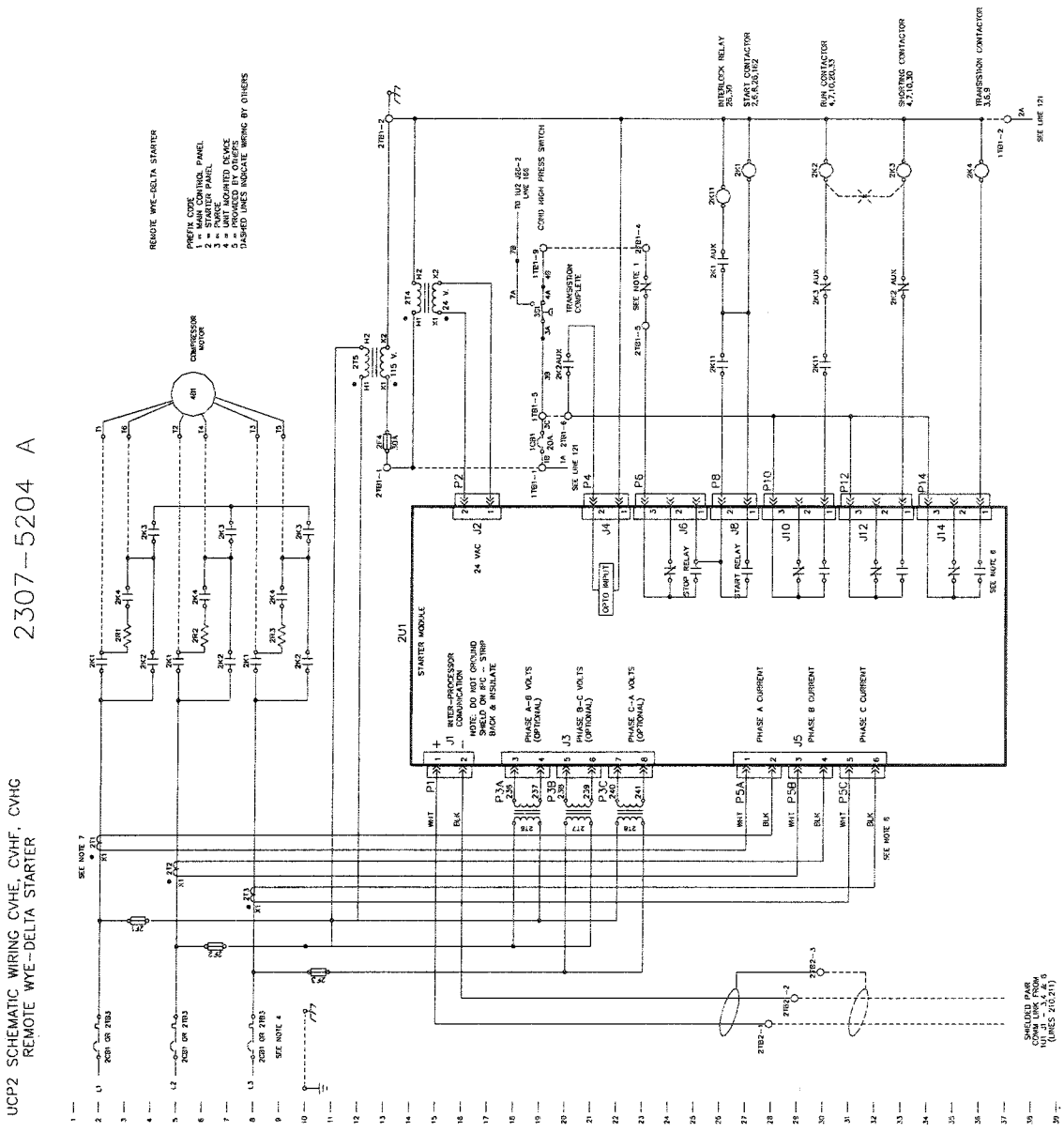

Figure 17 - Trane Supplied Remote Mounted Wye-Delta Starter

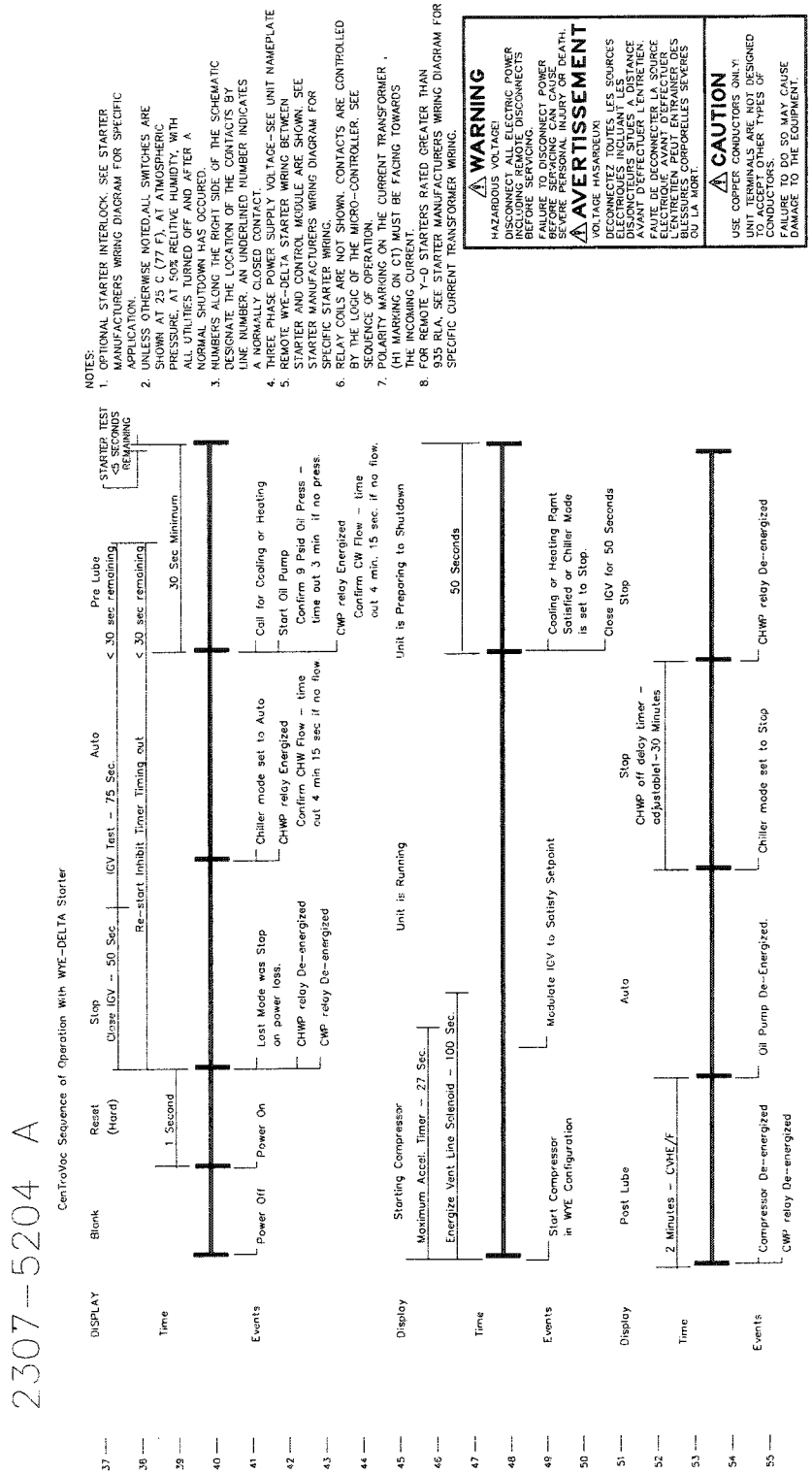

Figure 18 - Circuit Module (1U2) - CVHE, CVHF and CVHG With Refrigerant Pump

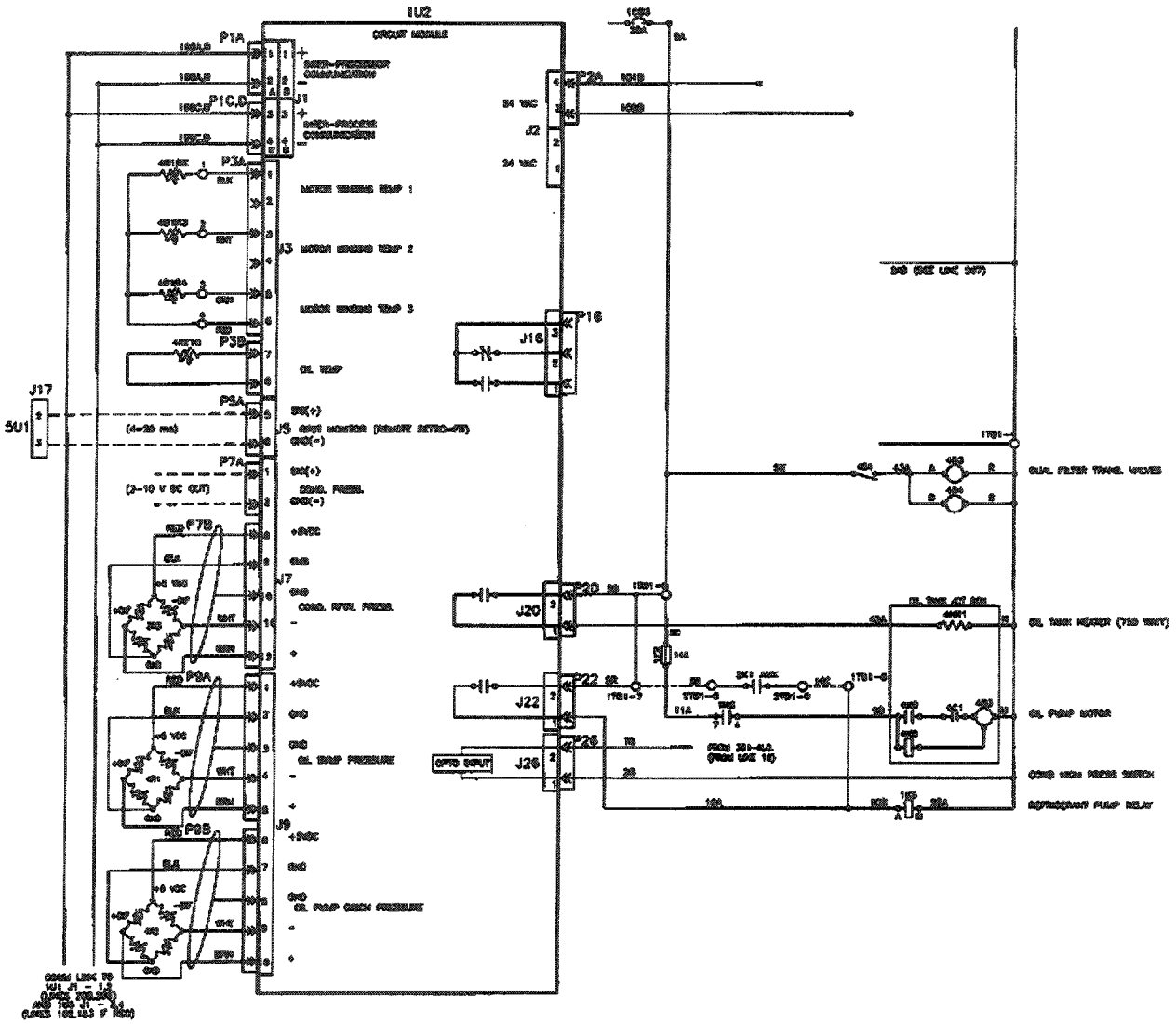

UCP2 Board Dip Switch Settings

Several of the UCP2 modules have dip switch settings on them, used to set up the board for 2-10 VDC or 4-20 MA signal inputs and or outputs of the boards. The following are the various switch settings.

Chiller Module

External Vane Position	Switch	2-10V	4-20 MA
	SW2-1	OFF	ON (SW2-2 and SW2-3 are not used).

Options Module

External Current Limit External Chilled Water	Switch	2-10V	4-20 MA
	SW2-1	OFF	ON (SW2-2 and SW2-3 are not used).
	SW3-1	OFF	ON (SW2-3 not used)

TCI/IPC Modules

Tracer COM3	Switch	-1	-2	-3
	SW1	OFF	OFF	OFF

Tracer COM4	Switch	-1	-2	-3
	SW1	OFF	ON	OFF

IPC BUFFER	Switch	-1	-2	-3
	SW1	OFF	OFF	ON

PRINTER	Switch	-1	-2	-3
	SW1	OFF	OFF	ON

Setup for External Current Limit Setpoint

The External Current Limit is an option that allows the current limit setpoint to be changed from a remote location. The External Limit Setpoint is found on Option Module terminals J7-11 and J7-12.

UCP2 shall accept either a 2-10 Vdc or 4-20 analog input suitable for customer connection to set the unit external current limit setpoint. 2-10 vdc and 4-20 ma shall each correspond to a 40 to 120% RLA range. CTV UCP2 will limit the maximum ECLS to 100%.

The following must be "SET":

1. SW2-1-OFF for 2-20 Vdc On for 4-20 ma.
2. Current Limit Setpoint Source: External
3. External Current Limit Setpoint: Installed
4. Setpoint Type: 2-10 Vdc or 4-20 ma

The user must also specify the type of External Setpoint Input (4-20 ma or 2-10 VDC) in the Machine Configuration Menu.

Setup for External Chilled Water Setpoint

The External Chilled Water Setpoint allows the chilled water setpoint to be changed from a remote location. The External Chilled Water Setpoint is found on Options Module terminals J9-4 and J9-5.

UCP2 shall accept either a 2-10 Vdc or 4-20 ma analog input suitable for customer connection to set the unit leaving chilled water setpoint. 2-10 vdc and 4-20 ma shall each correspond to a 0 to 65 F (-17.8 to 18.3 C) CWS range.

The following must be "SET":

1. SW3-1 OFF for 2-10 VDC. ON for 4-20 MA.
2. Chilled Water Reset Type: Disable - Operator Settings Group
3. Chilled Water Setpoint : Source External - Operator Settings Group
4. Setpoint Source Override: None - Operator Settings Group
5. External Chilled Water Setpoint: Installed - Service Settings Group - Machine Configuration
6. Setpoint Type: 2-10 Vdc or 4-20 ma. - Service Setting Group-Machine Configuration

Refrigerant Monitor Input

Analog type input 4-20ma input signal to the Circuit module J5-5 and J5-6. This represents 0-100 ppm.

Under Machine Configuration "Refrigeration Monitor Type". Direct communication to the CLD via the IPC.

Under Machine Configuration "Refrigeration Monitor Type" " 02" for IPC Monitor.

Also allows monitor calibration and setup. Please note that the monitor cannot have a local display, and communicate with the UCP2. If the customer requires a local display, he can connect an RMWD style monitor up like the analog type previously described. See Figure 19 for the Refrigerant Monitor Module (4U1).

Load Indication Output

Option Modules J7-3, --4

2-10 Vdc

As an option, the UCM shall provide a 0-10 Vdc analog output to indicate % RLA. The transfer function shall be 2 to 10 Vdc corresponding to 0 to 120% RLA.

Percent RLA Output:

UCP2 provides a 2-10 Vdc analog output to indicate Percent RLA. The transfer function shall be 2 to 10 Vdc corresponding to 0 to 120% RLA. With a resolution of 0.146%.

The following graph illustrates the output:

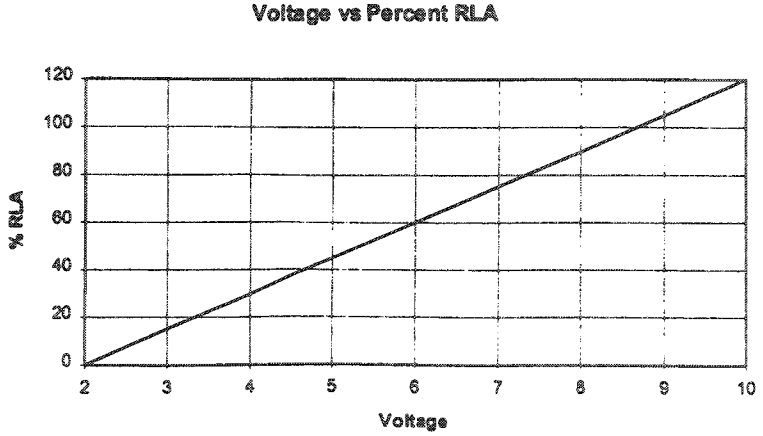

The Percent RLA Output is found on the Options Module terminals J7-3 and J4.

The Percent RLA Output is polarity sensitive.

J7-3 is +
J7-4 is -

The Percent RLA Output's maximum source capability is 30mA.

Percent Condenser Pressure Output:

The transfer function is 2 to 10 Vdc corresponding to 0 Psia to the HPC setting (psig) plus the local atmospheric pressure setting or, 0 Psia to HPC in Psia. The Percent Condenser Pressure Indication Output is based on the Condenser Refrigerant Pressure sensor if the Condenser Pressure Option is selected as "installed" at the CLD. The Percent Condenser Pressure Indication Output is based on the Saturated Condenser Refrigerant Temperature sensor if the Condenser Pressure Option is selected as "Not Installed" at the CLD.

When a Temperature Sensor Only is used and a Temperature to Pressure Conversion is made:

If the Condenser Saturated Temperature goes out of range due to an open or short, a pressure sensor diagnostic will be called and the output will also go to the respective out of range value. That is, for an out of range low on the sensor, the output will be limited to 2.0 VDC. For an out of range high on the sensor, the output will be limited to 10.0 VDC.

When a Condenser Pressure Sensor is used (Optional): If the Condenser Pressure sensor goes out of range due to an open or short, a pressure sensor diagnostic will be called and the output will go to end of range low. That is, for an out of range low on the sensor, the output will be limited to 2.0 VDC. For an out of range high on the sensor, the output will be limited to 2.0 VDC.

When a Temperature Sensor Only is used (Optional): If the Temperature Sensor (or Condenser Pressure sensor) goes out of range due to an open or short, a Temperature Sensor (or Pressure Sensor) diagnostic will be called and the output will go to end of range low. That is, for an out of range low on the sensor, the output will be limited to 2.0 VDC. For an out of range high on the sensor, the output will be limited to 2.0 VDC.

Or:

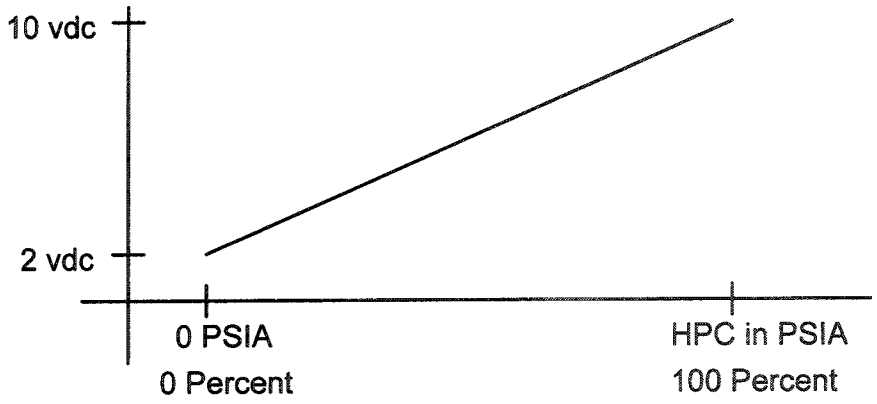

Refrigerant Differential Pressure Indication Output:

(Selectable in Service Settings - Field Start-up Group) The Transfer function is 2 to 10 VDC corresponding to the menu entered "Min Delta Pressure Calibration" setting to the menu entered "Max Delta Pressure Calibration" setting.

The transfer function is 2 to 10 Vdc corresponding to the menu entered "Min Delta Pressure Calibration" setting to the menu entered "Max Delta Pressure Calibration" setting. The Min Delta Pressure Calibration setting shall have a range of 0-400 psid (0-2758 kPa) in increments of 1 psid (1kPa).

The Max Delta Pressure Calibration setting shall have a range of 1-400 psid (7-2758 kPa) in increments of 1 psid (1kPa). The condenser refrigerant pressure shall be based on the Condenser Refrigerant Temperature sensor if the Condenser Pressure Option is selected as "Not Installed" at the CLD.

The evaporator refrigerant pressure shall be based on the Saturated Evaporator Refrigerant Temperature Sensor.

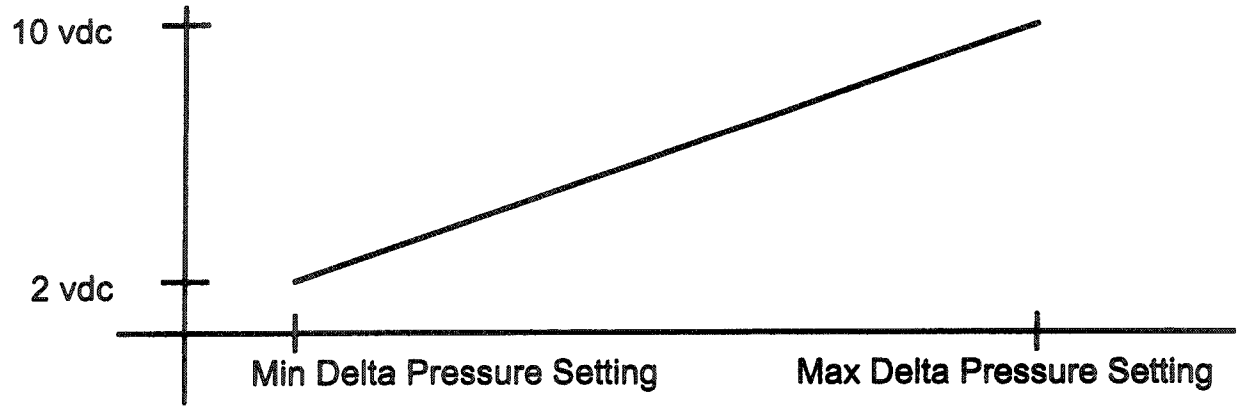

The Percent Condenser Pressure/ Refrigerant Differential Pressure Indication Output is located on the Circuit Module at J7-1, 2.

If the saturated condenser temperature is used to determine condenser pressure, it takes about 11.5 seconds for UCP2's Percent Condenser Pressure Output to respond to a step change in saturated condenser temperature.

The Percent Condenser Pressure Output can source a maximum of 30mA of current.

The maximum recommended length to run this signal is included in Table 1.

Table 1 - Recommended Length to Run Percent Condenser Pressure Output

Gauge	Ohms/Foot	Max Length (Ft)	Max Length (M)
14	0.002823	1062.7	324.0
16	0.004489	668.3	203.8
18	0.007138	420.3	128.1
20	0.01135	264.3	80.6
22	0.01805	166.3	50.7
24	0.0287	104.5	31.9
26	0.04563	65.7	20.0
28	0.07255	41.4	12.6
Note: the above table is for copper conductors only.			

Figure 19 - Refrigerant Monitor (4U1) CVHE, CVHF and CVHG

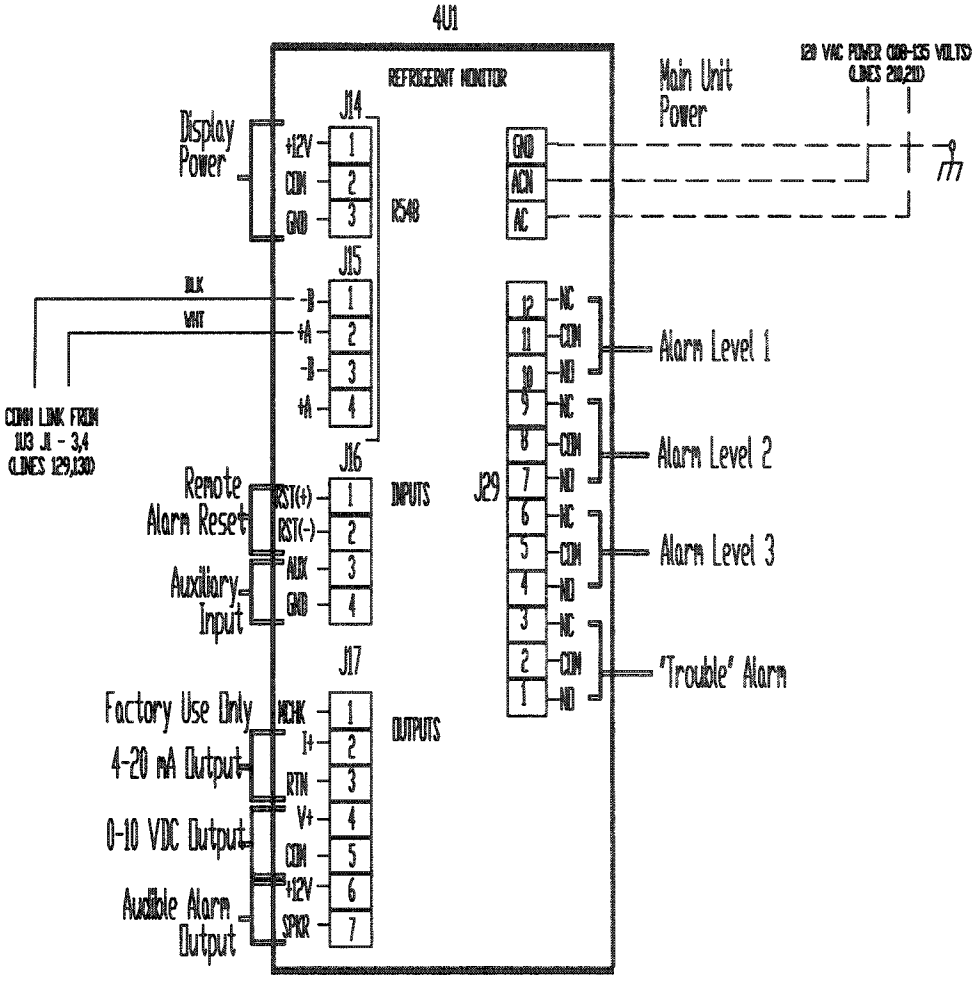

Electrical Sequence of Operation

Overview

This section will acquaint the operator with the control logic , governing CVHE, CVHF and CVHG chillers equipped with UCP2 based control systems. When reviewing the step-by-step electrical sequences of operation, refer to the typical wiring schematics shown in the installation manual or wiring manual which are shipped with the chiller.

Note: The typical wiring diagrams are representative of standard units and are provided only for general reference. They may not reflect the actual wiring of your unit. For specific electrical schematic and connection information, always refer to the wiring diagrams that shipped with the chiller.

With the supply power disconnect switch or circuit breaker (2CB1) closed, 120-volt control power transformer 2T5 and a 30-amp starter panel fuse (2F4) to terminal 1TB1-1 in the UCP2 control panel. From this point, control voltage flows to:

Circuit Breaker 1CB1, supplying power to starter module (2U1) via terminal 2TB1-6 for starter contactors operation and the high condenser pressure switch 3S1.

Circuit Breaker 1CB2, supplying power to the purge module (3U1) and the 24 volt supply transformer 3T1 for the purge module (3U1).

Circuit Breaker 1CB3, Supplying power to:

1. The I/O module (1U10) will operate the Hot Gas Bypass valve, the Oil Heater (4R1), and the oil pump motor through Fuse 1F2.

2. The chiller module (1U1) will operate evaporator (4L2) and condenser (4L3) water pressure transducer solenoids and to the chilled water (5S1) and condenser water (5S2) flow switch circuits.

The starter module (2U1) receives 24 volt power from control power transformer 2T4 in the starter panel.

The Clear Language Display (1U4), Stepper (1U3), Circuit (1U2), Options (1U5), Chiller (1U1), and COMM (1U6), (1U7), (1U8) & (U10) modules obtain 24 volt power from control power transformer 1T1 in the control panel.

Chilled and Condenser Water Flow Interlock Circuits

Proof of chilled water flow for the evaporator is made by the closure of flow switch 5S1 and the closure of auxiliary contacts 5K1 on terminals 1TB1-11 and 1TB1-12.

Proof of condenser water flow for the condenser is made by the closure of flow switch 5S2 and the closure of auxiliary contacts 5K2 on terminals 1TB1-11 and 1TB1-13.

UCP2 and Wye-Delta Starter Control Circuits

Logic Circuits within the various modules will determine the starting, running, and stopping operation of the chiller. If operation of the chiller is required and the chiller mode is set at "Auto", then the Chiller Module's logic decides to start the chiller based on the differential to start setpoint.

The chiller water pump relay (5K1) is energized by the Chiller Module (1U1-J12) and chilled water flow must be verified within 3 minutes by the Chiller Module (1U1-J26).

Circuit Module (1U2-J22) and the condenser water pump relay (5K2) Based on the restart inhibit timer and the differential to start setpoint, oil pump and refrigerant pump (4B3) will be energized by the will be energized by the Chiller Module (1U2-J14) when the restart inhibit timer is at 30 seconds or less. The oil pressure must be at least 9 Psid for 30 continuous seconds and condenser water flow verified within 3 minutes by the Chiller Module (1U1-J28) for the compressor start sequence to be initiated.

When less than 5 seconds remain before compressor start, a starter test is conducted to verify contactor states prior to starting the compressor. The following test/start sequence is conducted for "Wye-Delta" starters: Also refer to Figure 21 in this manual.

A. Test for transition complete contact open (2K2 AUX at 2U1-J4) - 160 to 240 msec. An MMR diagnostic will be generated if the contact is closed.

B. Delay time - 20 msec.

C. Close start contactor (2K1) and check for no current - 500 msec. If currents are detected, the MMR diagnostic "Starter Fault Type I" is generated.

D. Stop relay (2U1-J6) closes for 1 second for test "C" above.

E. Delay time - 200 msec.(Opens 2K1).

F. Close shorting contactor, (2K3) and check for no current - 1 sec. If currents are detected the MMR diagnostic "Starter Fault Type II" is generated. (Starter Integrity test)

G. If no diagnostics are generated in the above tests, the Stop Relay (2U1-J6) is closed for 2 seconds and the Start Relay (2U1-J8) is closed to energize the start contactor (2K1). The shorting contactor (2K3) has already been energized from (F) above. The compressor motor (4B1) starts in the "Wye" configuration, an auxiliary contact (2K1-AUX) locks in the start contactor (2K1) coil.

H. After the compressor motor has accelerated and the maximum phase current has dropped below 85% of the chiller nameplate RLA for 1.5 seconds, the starter transition to the "Delta" configuration is initiated.

J. The transition contactor (2K4) is closed through relay 2U1-J14, placing the transition resistors (2R1, 2R2, and 2R3) in parallel with the compressor motor windings.

K. The shorting contactor (2K3) is opened through the opening of relay 2U1-J12 100 msec after the closure of the transition relay 2U1-J14.

L. The run contactor (2K2) is closed through relay 2U1-J10 shorting out the transition resistors 260 msec after the opening of the shorting relay 2U1-J12. This places the compressor motor in the "Delta" configuration and the micro waits to look for this transition for 2.35 seconds through the closure of the transition complete contacts (2K2-AUX) at 2U1-J4.

M. The micro must now confirm closure of the transition complete contact (2K2-AUX) within 2.32 to 2.38 seconds after the run relay (2U1-J10) is closed. Finally, the transition relay (2U1-J14) is opened de-energizing the transition contactor (2K4) and the compressor motor starting sequence is complete. An MMR diagnostic will be generated if the transition complete contacts (2K2-AUX) do not close. A diagram of this test/start sequence is shown in Figure 21.

Now that the compressor motor (4B1) is running in the "Delta" configuration, the inlet guide vanes will modulate, opening and closing to the chiller load variation by operation of the stepper vane motor actuator (4B2) to satisfy chilled water setpoint. The chiller continues to run in its appropriate mode of operation: Normal, Softload, Limit Mode, etc.

If the chilled water temperature drops below the chilled water set point by an amount set as the "differential to stop" setpoint, a normal chiller stop sequence is initiated as follows:

1. The inlet guide vanes are driven closed for 50 seconds.

2. After the 50 seconds has elapsed, the stop relay (2U1-J6) and the condenser water pump relays (1U1-J14) open to turn off the compressor motor (4B3) will continue to run for 2 minutes post lube while the compressor coasts to a stop. The chilled water pump will continue to run while the chiller module (1U1) monitors leaving chilled water temperature preparing for the next compressor motor start based on the "differential to start" setpoint.

If the STOP key is pressed on the human interface, the chiller will follow the same stop sequence as above except the chilled water pump relay (1U1-J12) will also open and stop the chilled water pump after the chilled water pump delay timer has timed out after compressor shut down.

If the STOP key is pressed twice in rapid succession, twice within 5 seconds, a "panic stop" is initiated which follows the same stop sequence as pressing the STOP key once except the inlet guide vanes are not sequence closed and the compressor motor is immediately turned off.

Vane Actuator Control

The 1U3 Stepper Module pulses a DC voltage to the windings of the 4B2 Stepper Module Vane Actuator and 4B4 for CVHF 1470 and 1720 to control inlet guide vane position.

While operation of this stepper motor is automatic, manual control is possible by going to the Vane Control Status/Vane Position Commands screen in the Service Tests Menu and changing the "Target" value.

Note: If the chiller is operating in a limit mode (i.e. current limit, condenser limit, evaporator limit, etc.) the limit operation has priority over all manual modes of operation.

On each UCP power-up, the inlet guide vanes are driven full closed to recalibrate the zero position (Steps) of the Stepper motor vane actuator. An inlet guide vane stroke test is conducted for BPI (Binary Position Indicator) position on all resets (hardware and software) if there has not been a Momentary Power Loss.

Figure 21
UCP2 Test/Start Timing Sequence

Timing requirements to operate the "Stop", "Start", "Short", "Transition", and "Run" contact closure outputs are shown below. Prior to closing the "Short" contact, the transition complete input shall be verified to be open, otherwise an MMR diagnostic shall be generated.

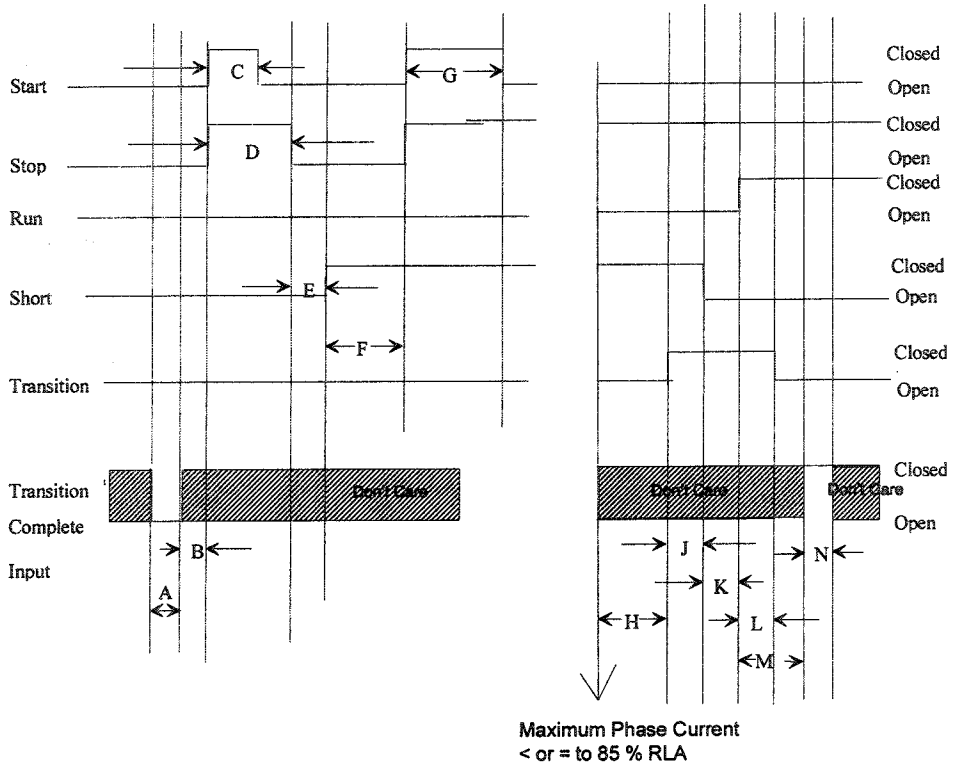

Interval	Minimum	Maximum	Units	Actual Design
A (Test for transition complete input open)				160 to 240 msec
B (Just delay time)				20 msec
C (Close 1M (2K1) Contactor and test for no current.)(Starter integrity test)				500 msec
D-(Hold 1M (2K1) Contactor and test for no current.)(Starter integrity test)				1 sec
E- (Open 1M (2K1) Delay time				200 msec
F- (Close Shorting Contactor (2K3) and and test for no current, then wait for Start command.) (Starter integrity test)	100 (1)		msec	1 sec (Min)
G (Close 1M (2K1)	2.0		sec	2 sec
H- (Wait 1.5 sec after phase currents drop to 85%)	1	2	sec	1.5 sec
J - (Begin Transition sequence)	85	100	msec	100 msec
K- (Open S (Shorting) Contactor)	250	300	msec	260 msec
L- (Close 2M (2K2) Contactor				140 msec
M- (Wait to look for Transition complete)	(2)		msec	2.32 to 2.38 sec
N (Filtering time on Transition complete input)	(2)		msec	160 to 240 msec

This is also done if there is a call for cooling or heating condition and it has been 24 hours or more since the last BPI test and there has not been a Momentary Power Loss for 5 minutes. See Figure 22 for BPI operation.

Note: The closed range of the BPI must straddle the factory programmed 90 degree Vane Position.

Circuit Breaker 1CB3 Oil Pump and Refrigerant/Oil Pump

Circuit Breaker 1CB3 115-volt control power from control power transformer 2T5 flows through branch circuit breaker 1CB3 and terminal 1TB1-6 to a 15 amp fuse (1F2) Fuse which protects the refrigerant/oil pump motor (4B3) from over amperage conditions.

Figure 22
CVHE, CVHF, CVHG IGV/Actuator Operation and BPI Switch

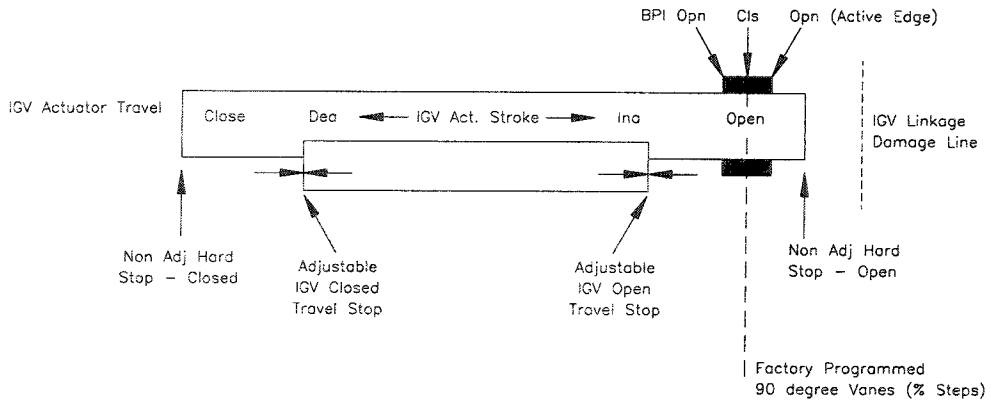

Current passing through fuse 1F2 reaches 3 normally open parallel sets of contacts: those of refrigerant/oil pump relay (1K5), 1U2-J22 relay and the start contactor 2K1-aux.

Note: While the 1U2-J22 relay automatically is closed by 1U2 as a part of the start sequence. It can also be closed manually by changing the oil pump status to "ON" in the service test mode.

Closure of the 1U2-J22 or 2k1 auxiliary contacts also allows current to pass through the coil of the refrigerant pump starter relay (1K5) closing the contact 1K5, to the start windings of the refrigerant pump. When motor 4B3 first starts, current draw is high: This causes current sensing relay 4K8 to close its normally open contacts and pull in of pump Capacitor 4C1. Increasing motor speed and related decreasing current through the main winding and relay coil reduce the magnetic force and the armature "Drips out". To open the start contacts and disconnect the start windings and capacitor. Current now flows to the Run windings of the oil pump motor or refrigerant/oil pump motor.

Restart Inhibit

A Restart Inhibit Timer is used to prevent high frequent chiller ON-OFF cycling and subsequent motor overheating.

The Restart Inhibit (RI) timer is set based on a Background Timer (BT) that is incremented by (XX) minutes at every start and is timed out from the new total only while the chiller is running and is based on the equation: RI = BT-50.

The value of XX is based on nominal compressor size to include the motor heating constant as listed in the Table 2 on this page.

This value of the motor heating constant (XX) must be set in the Machine Configuration Group of the Service Settings Menu based on the unit NTON and motor frequency.

On any UCM Reset (either hardware (e.g. powerup or software), the RI Timer is reset to 30 seconds if the motor winding temperature is less than or equal to 165°F. The maximum value of the RI Timer is 60 minutes, and is adjustable from 25 to 60 minutes in the Field Startup Group of the Service Settings menu.

See Figure 23 for an example of how the RI Timer functions.

Any other pre-start system timers, e.g. prelube = 60 seconds, overlap the RI Timer to anticipate its time out and permit start of the compressor at or shortly after the RI. If the RI Timer value ever reaches 45 minutes an IFW diagnostic is generated.

The RI Timer can be cleared to 30 seconds in the Service Settings Menu.

If the RI Timer is the overriding criteria holding the chiller off, this mode will be displayed along with the remaining time, counting down, prior to the chiller starting.

Table 2 - NTON/BT Information

NTON	BT
230-320	30
360-500	35
560-800	40
890 - 1280	50
1470-1720	65

Figure 23
CVHE, CVHF and CVHG - UCP2 Restart Inhibit Timer

Parameter	CVHE/CVHF
Background Timer Increment on Start (Motor Heating Constant)	Adjustable, 25 Min. Fac. Dflt.
General RI Timer Setting	RI = BT -50 Minutes
Minimum RI Timer Setting	30 Seconds
Maximum RI Timer Setting	60 Minutes
Adjustment Range of Maximum RI Timer Setting	30 to 60 Minutes
Winding Temperature Decision Point/RI Timer Above this Temp. after Reset	165 F (73.8C)/15 Minutes
IFW Diagnostic Threshold	RI Timer = 45 Minutes

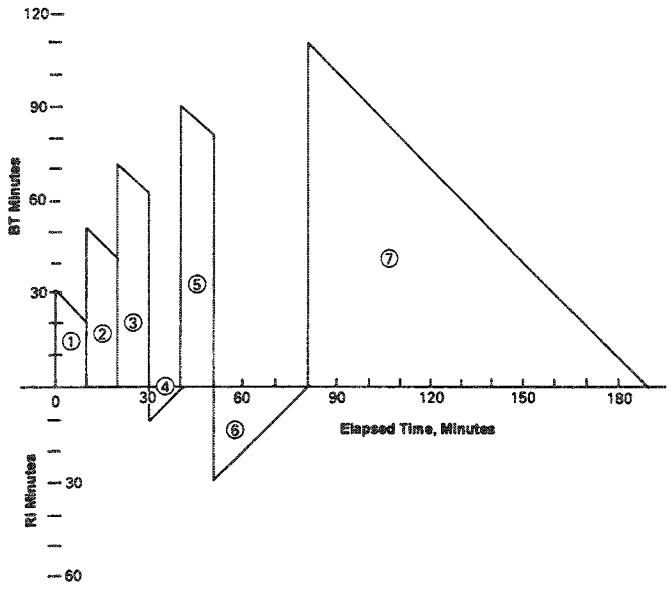

1. Unit started and ran 10 min., BT incremented 30 Min., and decreased by 10 min. RI = (30-10) - 50 = -30.
2. Unit restarted RI = -30, BT incremented another 30 min., unit ran 10 min. and BT decreased by 10 min. RI = (50-10) - 50 = -10
3. Unit restarted RI = -10, BT incremented another 30 min., unit ran 10 min. and BT decreased by 10 min., RI = (70-10) - 50 = 10.
4. Unit Restart Inhibit is 10 min. from (3).
5. Unit restarted after 10 min. RI in (4), BT incremented another 30 min., unit ran 10 min. and BT decreased by 10 min. RI = (90-10) -50 = 30.
6. Unit restart is 30 min. from (5).
7. Unit restarted after 30 minute RI min, (6), BT incremented another 30 min., and unit ran for 110 min., and BT goes to zero.

Notes:
1. 30 second/15 minute restart inhibit due to motor winding temperature not included.
2. Example for Motor Heating Constant = 30
3. If calculated RI is negative then RI = 0.

Controls Chilled Water Reset (CWR)

Chilled water reset is designed for those applications where the design chilled water temperature is not required at partload. In these cases, the leaving chilled water temperature setpoint can be reset upward using the CWR features.

When the CWR function is based on return water temperature, the CWR feature is standard.

When the CWR function is based on outdoor air temperature, the CWR feature is an option requiring an outdoor temperature sensor and the Options Module installed in the UCP2 panel.

The type of CWR is selected in the Operator settings Menu along with the Reset Ratio, Start Reset Setpoint, and the Max Reset Setpoint.

The following equations and parameters apply for CWR.

Return Water

CWS' = CWS + RATIO (START RESET - TWE - TWL) and CWS' > or = CWS' and CWS - CWS < or = Maximum Reset.

Outdoor Air Temperature

CWS' = CWS + RATIO (START RESET - TOD) and CWS' > or = CWS' and CWS - CWS < or = Maximum Reset.

Where

CWS is the new chilled water setpoint.

CWS is the active chilled water setpoint before any reset has occurred RESET RATIO is a user adjustable gain.

START RESET is a user adjustable reference.

TWE is entering evap. water temperature.

MAXIMUM RESET is a user adjustable limit providing the maximum amount of reset. For all types of reset, CWS - CWS < or = Maximum Reset.

The values for "Start Reset" for each of the reset types are shown in Table 3.

Both Return and Outdoor Reset do not apply to Heat Pump Mode where the UCP2 is controlling the Leaving Water Temperature.

Constant Return Reset will reset the leaving water temperature setpoint so as to provide a constant entering water temperature. The Constant Return Reset equation is the same as the Return Reset equation except on selection of Constant Return Reset, the UCP2 shall automatically set RATIO, START RESET, and MAXIMUM RESET to the following:

The RATIO = 100%
The START RESET = Design Delta Temp.
The MAXIMUM RESET = Design Delta Temp.

The equation for Constant Return is as follows:

Table 3 - Values for Start Reset Types

The values for "RESET RATIO" for each of the reset types are:				
Reset	Reset	Increment	Increment	Factory
Type	Ratio	English	SI Units	Default
	Range	Units		Value
Return	10 to 120%	1%	1%	50%
Outdoor	80 to -80%	1%	1%	10%
The values for "START RESET " for each of the reset types are:				
Reset	Start	Increment	Increment	Factory
Type	Reset	English	SI Units	Default
	Range	Units		Value
Return	4 to 30 F	1 F	0.1 C	10 F (5.6C)
	(2.2 to 16.7C)	1 F	0.1 C	90 F (32.2C)
The values for "MAXIMUM RESET" for each of the reset types are:				
Reset	Maximum	Increment	Increment	Factory
Type	Reset	English	SI Units	Default
	Range	Units		Value

Constant Return

CWS' = CWS ÷ 100% (Design Delta Temp.) - (TWE-TWL) and CWS > or = CWS and CWS - CWS < or = Maximum Reset

Notice that Constant Return is nothing more than a specific case of Return Reset offered for operator convenience.

When any type of CWR is enabled, the UCP2 will step the CWS toward the desired CWS (based on the above equations and setup parameters) at a rate of 1°F every 5 minute until the Active CWS equals the desired CWS'. This applies when the chiller is both running and not running.

The chiller will start at the Differential to Start value above a fully reset CWS or CWS for both Return and Outdoor Reset.

The graph on the next page, shows the reset function for Outdoor Air Temp: **Note:** This graph assumes that Maximum Reset is set to 20 degrees.

Using the Equation for calculating CWR for Outdoor Air Temp

Equation:

Degrees of Reset = Reset Ratio*(Start Reset - TOD)

Degrees of Reset:

Degrees of Reset = Active CWS - Front Panel CWS
or
Degrees of Reset = CWS' - CWS

To obtain Active CWS from Degrees of Reset :
Active CWS = Degrees of Reset + Front Panel CWS

Reset Ratio:

The Reset Ratio on the CLD is displayed as a percentage. To use it in the above equation it must be converted to it's decimal form.

Reset Ratio percent /100 = Reset Ratio decimal

Example of converting Reset Ratio:

If the Reset Ratio displayed on the CLD is 50% then use (50/100)=.5 in the equation

TOD = Outdoor Air Temp

Start Reset = Outdoor Air Start Reset

Example of Calculating Reset for Outdoor Air Temp:

If:
Reset Ratio = 35%
Start Reset = 80
TOD = 65
Maximum Reset = 10.5

How many Degrees of Reset will there be?

Degrees of Reset = Reset Ratio*(Start Reset - TOD)
Degrees of Reset = .35*(80-65)
Degrees of Reset = 5.25

If:
Reset Ratio = -70%
Start Reset = 90
TOD = 100
Maximum Reset = 17

How many Degrees of Reset will there be?

Degrees of Reset = Reset Ratio*(Start Reset - TOD)
Degrees of Reset = -.7*(90-100)
Degrees of Reset = 7

Electrical Sequence of Operation

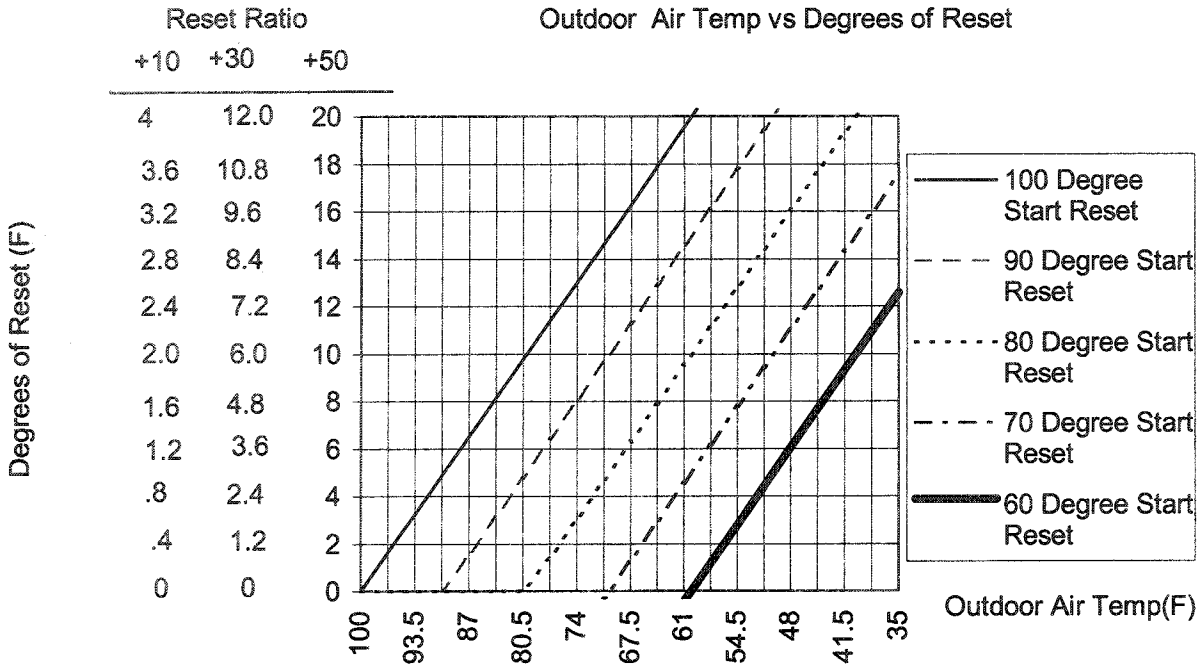

The following graph illustrates the reset functions of the above examples:

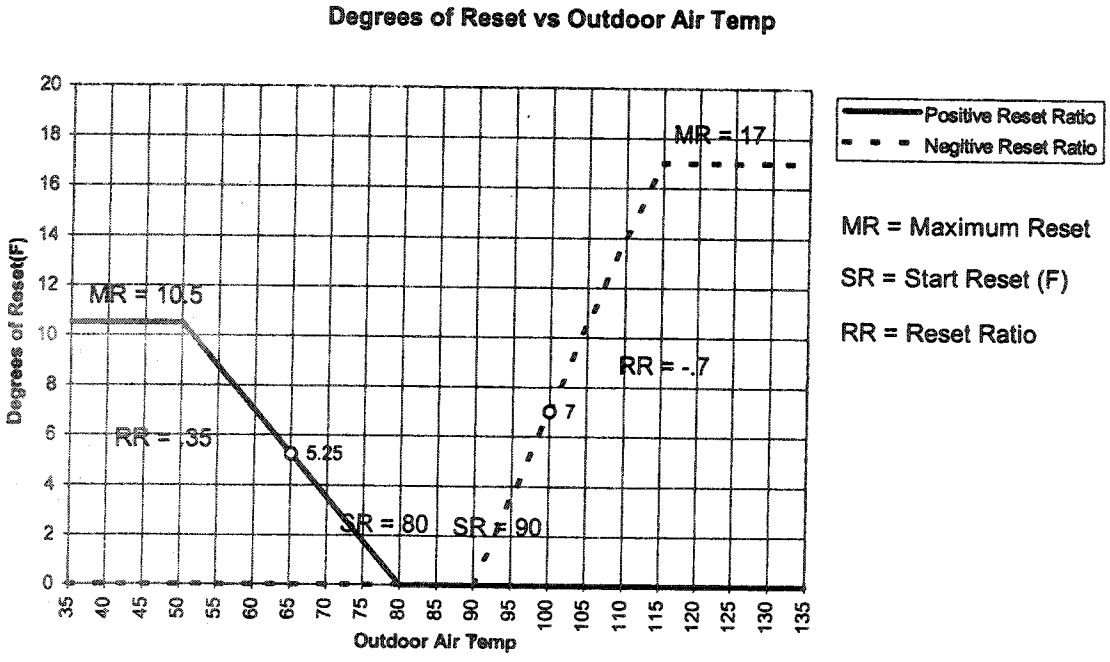

The following graph shows the reset function for Return CWR:

The following graph shows the reset function for Return CWR:

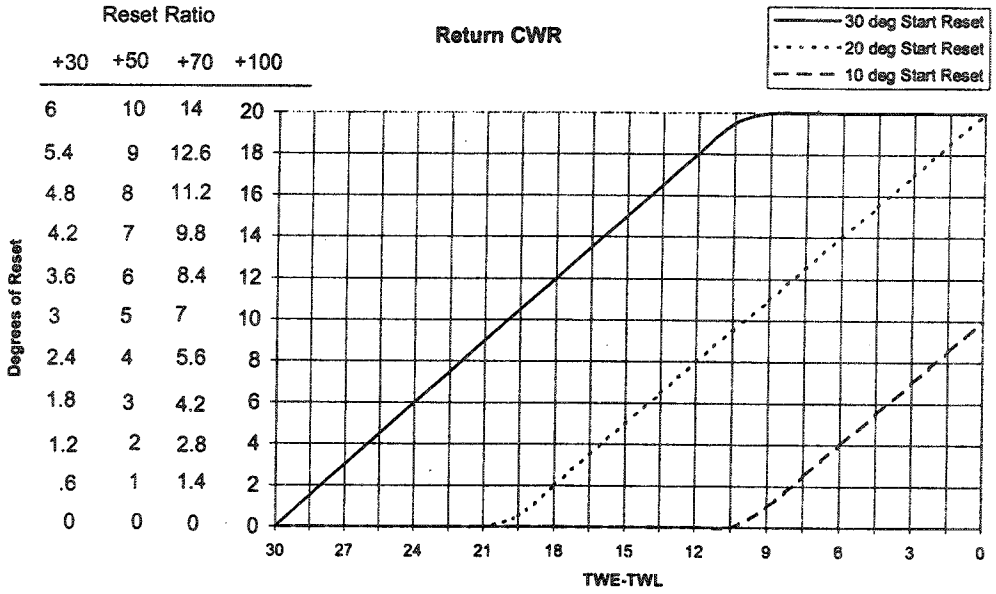

Note: This graph assumes Maximum Reset is set to 20 degrees.
Example of Calculating Return Reset:

If:
Reset Ratio = 50%
Start Reset = 25
TWE = 65
TWL = 45
Maximum Reset = 8

How many Degrees of Reset will there be?

Degrees of Reset = Reset Ratio*(Start Reset - (TWE-TWL))
Degrees of Reset = .5*(25-(65-45))
Degrees of Reset = 2.5

If:
Reset Ratio = 70%
Start Reset = 20
TWE = 60
TWL = 53
Maximum Reset = 14

How many Degrees of Reset will there be?

Degrees of Reset = Reset Ratio*(Start Reset - (TWE-TWL))
Degrees of Reset = .7*(20-(60-53))
Degrees of Reset = 9.1

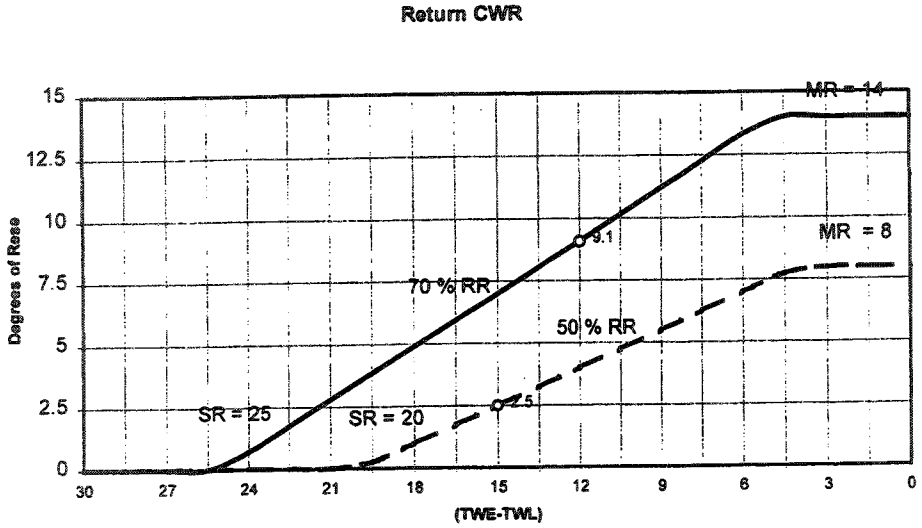

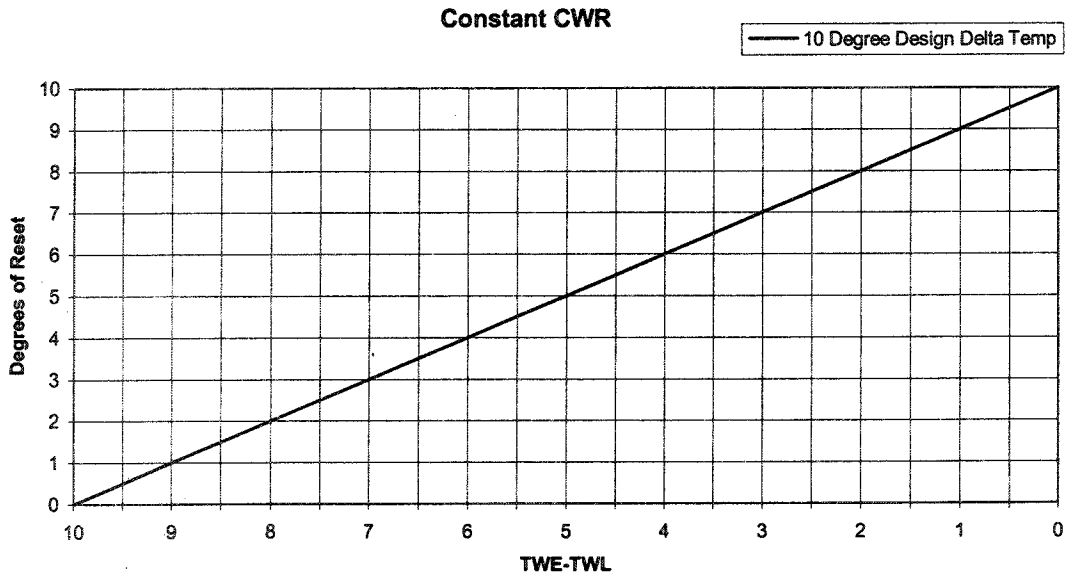

The following graph illustrates the Reset Actions of the above examples:

Differential to Start/Stop

The Differential to Start setpoint is adjustable from 1 to 10°F (0.5 to 5.55 C) and the Differential to Stop setpoint adjustable from 1 to 10°F (0.5 to 5.55C). Both setpoints are with respect to the Active Chilled Water Setpoint and are set in the Service Settings menu.

When the chiller is running and the LWT reaches the Differential to Stop setpoint the chiller will go through its shutdown sequence to AUTO.

Leaving Water Temperature Cutout

Leaving water temperature cutout is a safety control that protects the chiller from damage caused by water freezing in the evaporator. The cutout setpoint is adjustable in the Service Settings Menu.

For freeze protection from low leaving water temperatures the UCP2 provides a low leaving water temperature cutout based on leaving water temperature. The "Leaving Water Temperature Cutout Setpoint" is independently adjustable from the chilled water setpoint and factory set. Shutdown of the compressor due to violation of the Leaving Water Temperature Cutout results in an automatically resettable diagnostic (MAR).

The UCP2 indicates when the "Leaving Water Temperature Cutout Setpoint" conflicts with the chilled water temperature setpoint by a message on the display. The "Leaving Water Temperature Cutout Setpoint" and chilled water setpoint, both active and front panel, are separated by a minimum of 1.7°F.

See Cutout Strategy, Figure 24. When either difference is violated, the UCP2 does not permit the above differences to be violated and the display exhibits a message to that effect and remains at the last valid setpoint.

When the chilled water setpoint, both active and front panel, is adjusted downward, it does not violate the above minimum differences and the "Leaving Water Temperature Cutout Setpoint" remains at its current setting. When the "Leaving Water Temperature Cutout Setpoint" is adjusted upward, the above minimum difference is not violated and as the "Leaving Water Temperature Cutout Setpoint" is setpoint, both active and front panel, is raised to maintain the minimum difference.

After violation of the "Leaving Water Temp. Cutout Setpoint" for 30°F seconds the chiller will shutdown and indicate a diagnostic.

Low Refrigerant Temperature Cutout

This is a safety function that prevents water in the evaporator from freezing due to low evaporator refrigerant temperatures. When the trip point is violated, the chiller will shut down and display a latching diagnostic (MMR) indicating the violation. The cutout setpoint is adjustable in the Service Settings Menu.

The UCP2 indicates when the "Low Refrigerant Temp. Cutout Setpoint" conflicts with the chilled water temperature setpoint by a message on the display.

The "Low refrigerant Temp Cutout Setpoint" and chilled water setpoint, both active and front panel, are separated by a minimum of 6°F. See Figure 24.

When either difference is violated, the UCP2 does not permit the above differences to be violated and the display exhibits a message to that effect and remains at the last valid setpoint.

When the chilled water setpoint, both active and front panel, is adjusted downward, it does not violate the above minimum differences, and the "Low Refrigerant Temperature Cutout Setpoint is adjusted upward, the above minimum difference is not violated, and as the "Low Refrigerant Temperature Cutout Setpoint" is adjusted upward, the chilled water setpoint, both active and front panel, are raised to maintain the minimum difference.

After violation of the "Low Refrigerant Temp. Cutout Setpoint" for 30°F - seconds, the chiller will shutdown and indicate a diagnostic.

Enhanced Condenser Limit Control

When the chiller is running Condenser Limit Mode or in Surge Mode, the head relief request relay on the Options Module (1U5-J12) will be energized and can be used to control or signal for a reduction in the entering condenser water temperature.

Designed to prevent high refrigerant pressure trip-outs during critical periods of chiller operation, this UCP2 option consists of:

1. Condenser refrigerant Pressure Transducer (3R3).

2. The Options Module (1U5) with the head relief request relay (1U5-J12).

3. Interconnecting Wiring.

If the unit is not equipped with the Enhanced Condenser Limit Option (3R31U5) the unit will use the condenser refrigerant temperature sensor (input converted to saturated refrigerant pressure) to perform the Standard Condenser Limit function, without the head relief request relay, by limiting inlet guide vane stroke and chiller capacity.

Keep in mind that the UCP2 Condenser Limit Control supplements the protection provided by the condenser pressure high pressure cutout switch 3S1.

Free Cooling

To enable Free Cooling Mode:

1. "Install" Free Cooling in the Machine Configuration Menu.

2. Enable the Free Cooling mode in the Operator Settings Menu to "ON" while the chiller is in "AUTO", or

3. Close the external binary input switch to the Options Module 1U5-J3-5 and -6 if so equipped while the chiller is in "AUTO".

Free Cooling can not be entered if the chiller is in "STOP".

If the chiller is in "AUTO" and not running, the condenser water pump will start. After condenser water flow is proven, relays at 1U5-J16, 1U5-J20, and 1U5-J24 will energize operating the Free Cooling Valves 4B12 and 4B13. The Free Cooling Valves End Switches must open within 3 minutes, or an MMR diagnostic will be generated. Once the Free Cooling Valves End Switches open, the unit is in the Free Cooling mode.

If the chiller is in "AUTO" and running powered cooling, the chiller will do a friendly shut down first, (Run: Unload, Post Lube, and drive vanes closed). After the vanes have been overdriven, closed and condenser water proven, the Free Cooling relays will be energized.

To disable Free Cooling and return to Powered Cooling, either disable the Free Cooling Mode in the Operators Settings menu if used to enable Free Cooling or "OPEN" the external binary input switch to the Options Module if it was used to enable Free Cooling.

Once Free Cooling is disabled, the Free Cooling relays 1U5-J16, and 1U5-J20 and 1U5-J24 will de-energize allowing the Free Cooling valves to close. The Free Cooling valves end switches must close within 3 minutes or an MMR diagnostic is generated.

Once the end switches close the chiller will return to "AUTO" and powered cooling will resume if there is a call for cooling based on the differential to start.

Once powered cooling has resumed and the compressor has started, the inlet guide vanes will be held closed for 3 minutes to allow for temperature/pressure stabilization.

Note: The manual control of the inlet guide vanes is disabled while in the Free Cooling Mode and the compressor is prevented from starting by the control logic.

Note: The relay at 1U5-J20 is a FC auxiliary relay and can be used as required.

Hot Gas Bypass

The hot gas bypass (HGBP) control option is designed to minimize machine cycling by allowing the chiller to operate stably under minimum load conditions. In these situations, the inlet guide vanes are "locked" at a preset minimum position, and unit capacity is governed by the HGBP valve actuator.

Control circuitry is designed to allow both the inlet guide vanes and the HGBP valve to close for unit shutdown.

HGBP is enabled in the Field Startup Group of the Service Settings Menus by enabling the option and setting the HGBP Cut-In Vane Position in the same menu.

After a chiller starts and is running the inlet guide vanes will pass through the HGBP Cut-In-Vane position as the chiller starts to load. As the chiller catches the load and starts to unload, the inlet guide vanes will close to the HGBP Cut-In Vane position. At this point the movement of the inlet guide vanes is frozen and further unloading of the chiller is controlled by the opening of the HGBP Valve 4B5 by the 1U10 module. The 1U10 module modulates the HGBP valve at low loads.

When the control algorithm determines the chiller to be shut down, the inlet guide vanes will be driven fully closed, and the HGBP valve will be driven closed. After the inlet guide vanes are fully closed the chiller will shut down in the Friendly mode.

Chillers with HGBP have a discharge temperature sensor (4RT6) monitoring the discharge gas temperature from the compressor. If this temperature exceeds 200°F, the chiller will shut off on a MAR diagnostic. The chiller will reset automatically when this temperature drops 50°F below the trip-point.

Figure 24
Cutout Strategy

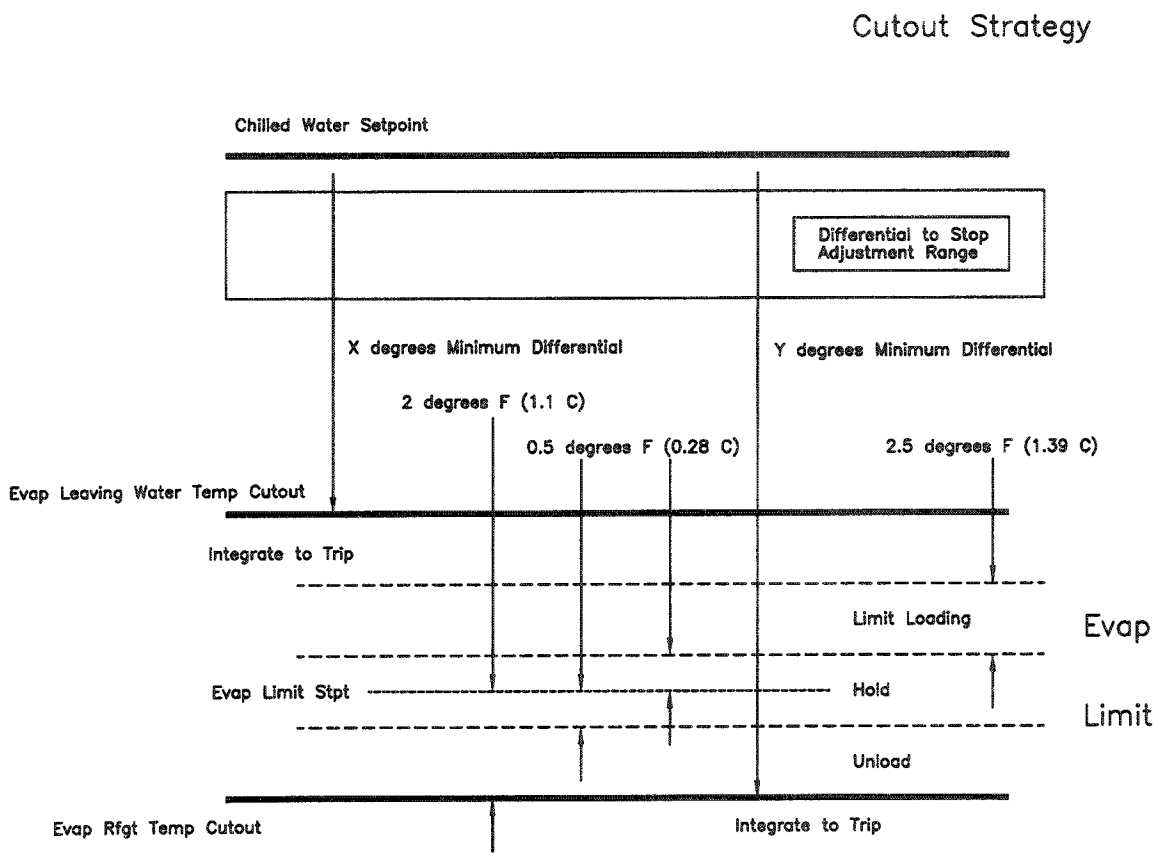

Ice Machine Control

UCP2 provides a service level "Enable/Disable" menu entry for the Ice Building feature when the Ice Building option is installed.

UCP2 will accept either an isolated contact closure (J3, 7 & 8 on the options module) or a remote communicated input (Tracer) to initiate the ice building mode where the unit runs fully loaded at all times. Ice building will be terminated either by opening the contact or based on entering evaporator water temperature. UCP2 will not permit the Ice Building mode to be entered again until the unit is switched to the NON-Ice Building mode and back into the Ice Building mode. It is not acceptable to reset the chilled water setpoint low to achieve a fully loaded compressor.

While in the Ice Building mode, current limit setpoints less than the maximum will be ignored.

Ice Building can be terminated by one of the following means:

1. Operating the external ice contacts and remote communicated input (Tracer).

2. Satisfying an evaporator entering water temperature setpoint.

3. Surging for 15 minutes at full open IGV.

Unit Start-Up Procedures

Daily Unit Start-Up

1. Verify the chilled water pump and condenser water pump starter are in "ON" or "AUTO".

2. Verify the cooling tower is in "ON" or "AUTO".

Note: Refer to Figure 25 for UCP Start-Run-Shutdown sequence and UCP timing functions.

3. Check the oil tank oil level; the level must be visible in or above the lower sight glass. Also, be sure to check the oil tank temperature; normal oil tank temperature before start-up is 140°F to 145°F (60 to 63 C).

Note: The oil heater is energized during the compressor off cycle. During unit operation, the oil tank heater is de-energized.

4. If the chiller is equipped with the free cooling option, ensure that the free cooling option is disabled in the Operator Settings menu.

5. Check the chilled water setpoint and readjust it, if necessary, in the Operator Settings menu.

6. If necessary, readjust the current limit setpoint in the Operators Setting menu.

7. Press "AUTO".

The UCP also checks compressor motor winding temperature, and a minimum 30 second delay is initiated if the winding temperature is less than 165°F. If it is greater than 165°F, however, a 15-minute delay period begins. The chilled water pump relay is energized and evaporator water flow is proven.

Next, the UCP checks the leaving evaporator water temperature and compares it to the chilled water setpoint. If the difference between these values is less than the start differential setpoint, cooling is not needed.

If the UCP determines that the difference between the evaporator leaving water temperature and chilled water setpoint exceeds the start differential setpoint, the unit enters the initiate Start Mode and the oil pump/Refrigerant pump and the condenser water pump are started. If condenser water flow is not proven (i.e. flow switch 5S3 does not close) within 3 minutes, the unit is locked out on a MMR Diagnostic.

Oil pressure must be verified within 3 minutes or a MMR diagnostic is generated.

When less than 5 seconds remain on the restart inhibit, the pre-start starter test is conducted on Y-Delta starters. If faults are detected, the unit's compressor will not start, and a MMR Diagnostic will be generated.

If the compressor motor starts and accelerates successfully, "Unit is Running" appears on the display. At this time the purge unit will start operating on "Automatic" and will continue to operate as long as chiller compressor is running.

Note: Whenever the UCP detects a MMR diagnostic condition during start-up, unit operation is locked out, and manual reset is required before the start-up sequence can begin again. If the fault condition has not cleared, the UCP will not permit restart.

When the cooling requirement is satisfied, the UCP originates a "Shutdown" signal. The inlet guide vanes are driven closed for 50 seconds, and the unit enters a 3-minute post-lube period. The compressor motor and condenser water pump starter are de-energized immediately, but the oil pump continues to run during this 3-minute interval; the evaporator pump will continue to run.

Once the post-lube cycle is done, the unit returns to auto mode.

Electrical Sequence of Operation

Seasonal Unit Start-Up

Note: Refer to Figure 25 for UCP Start-Run-Shutdown sequence and UCP timing functions.

1. Close all drain valves, and re-install the drain plugs in the evaporator and condenser headers.

2. Service the auxiliary equipment according to the start-up/ maintenance instructions provided by the respective equipment manufacturers.

3. Vent and fill the cooling tower, if used, as well as the condenser and piping. At this point, all air must be removed from the system (including each pass). Then close the vents in the condenser water boxes.

4. Open all of the valves in the evaporator chilled water circuit.

5. If the evaporator was previously drained, vent and fill the evaporator and chilled water circuit. When all air is removed from the system (including each pass), close the vent valves in the evaporator water boxes.

6. Lubricate the external vane control linkage as needed.

7. Check the adjustment and operation of each safety and operating control.

8. Close all disconnect switches.

⚠ WARNING

USE CARE WHEN MEASUREMENTS, ADJUSTMENTS, OR OTHER SERVICE-RELATED WORK IS PERFORMED WITH POWER ON. Failure to do so can result in injury or death due electrical shock or contact with moving parts.

9. Perform instructions listed in "Daily Unit Start-up" section.

⚠ CAUTION

PROPER SAFEGUARDS SHOULD BE TAKEN TO ENSURE THE EVAPORATOR WATER PUMP DOES NOT CONTINUE TO RUN LONGER THAN 30 MINUTES AFTER CHILLER SHUTDOWN. Failure to avoid excessive operation of the evaporator water pump with chiller off may cause rupture disc failure and loss of refrigerant charge.

⚠ WARNING

IF THE CHILLED WATER LOOP IS USED IN A HEATING MODE, ENSURE THAT THE EVAPORATOR IS ISOLATED FROM THE HOT WATER LOOP BEFORE CHANGEOVER TO HEADING MODE. Failure to do so may cause rupture disc failure and loss of refrigerant charge.

Unit Shutdown Procedures

Daily Unit Shutdown

Note: Refer to Figure 25 for UCP Start-Run Shutdown sequence and UCP timing functions.

1. Press STOP.

2. After compressor shutdown turn Pump Contactors to OFF or open pump disconnects.

Seasonal Unit Shutdown

⚠ CAUTION

CONTROL POWER DISCONNECT MUST REMAIN CLOSED TO ALLOW OIL SUMP HEATER OPERATION. Failure to do this will allow refrigerant to condense in the oil pump.

3. Open all disconnect switches except the control power disconnect switch.

4. Drain the condenser piping and cooling tower, if used.

5. Remove the drain and vent plugs from the condenser headers to drain the condenser.

6. Once the unit is secured for winter, the maintenance procedures described under "Annual Maintenance" in the Periodic Maintenance section of this manual should be performed by qualified Trane service technicians.

Note: During extended shutdown, be sure to operate the purge unit for a 2-hour period every two weeks. This will prevent the accumulation of air and non-condensables in the machine. To start the purge, change the purge mode to ON in the Operator Settings Menu. Refer to CVHE-CLD-1A or latest revision. Remember to turn the purge mode to AUTO after the 2-hour run time.

⚠ WARNING

DO NOT ALLOW THE CHILLER TO INCREASE IN TEMPERATURE PRESSURE TO A TEMPERATURE ABOVE 110°f (43C) WHILE THE UNIT IS OFF. Failure to do so will cause the rupture disk to relieve and discharge the refrigerant from the machine. Continuous running of pumps while the machine is off may cause this condition to occur. The rupture disk is designed to relieve and discharge the refrigerant from the unit if the pressure in the evaporator exceeds 15 PSIG causing bodily harm and possible death to anyone in contact with refrigerant discharge.

Electrical Sequence of Operation

⚠ WARNING
TO ALLOW OIL SUMP HEATER OPERATION, CONTROL POWER MUST REMAIN CLOSED DURING ENTIRE SHUTDOWN PERIOD. Failure to do so will allow refrigerant to condense in the oil sump.

⚠ WARNING
DO NOT ALLOW CHILLER TO INCREASE IN TEMPERATURE OR PRESSURE WHILE THE UNIT IS OFF. Continuous running of pumps while the chiller is off can increase the temperature or pressure and will result in premature release of refrigerant causing bodily harm and possible death to anyone in contact with refrigerant discharge.

Trouble Analysis

If the RED light on the control panel is flashing, an MMR diagnostic has occurred. Refer to CVHE-CLD-1A or the latest revision. See the Diagnostic section for trouble shooting information.

Figure 25
CVHE, CVHF and CVHG - UCP Start-Run-Shutdown Sequence and UCP Timing Functions

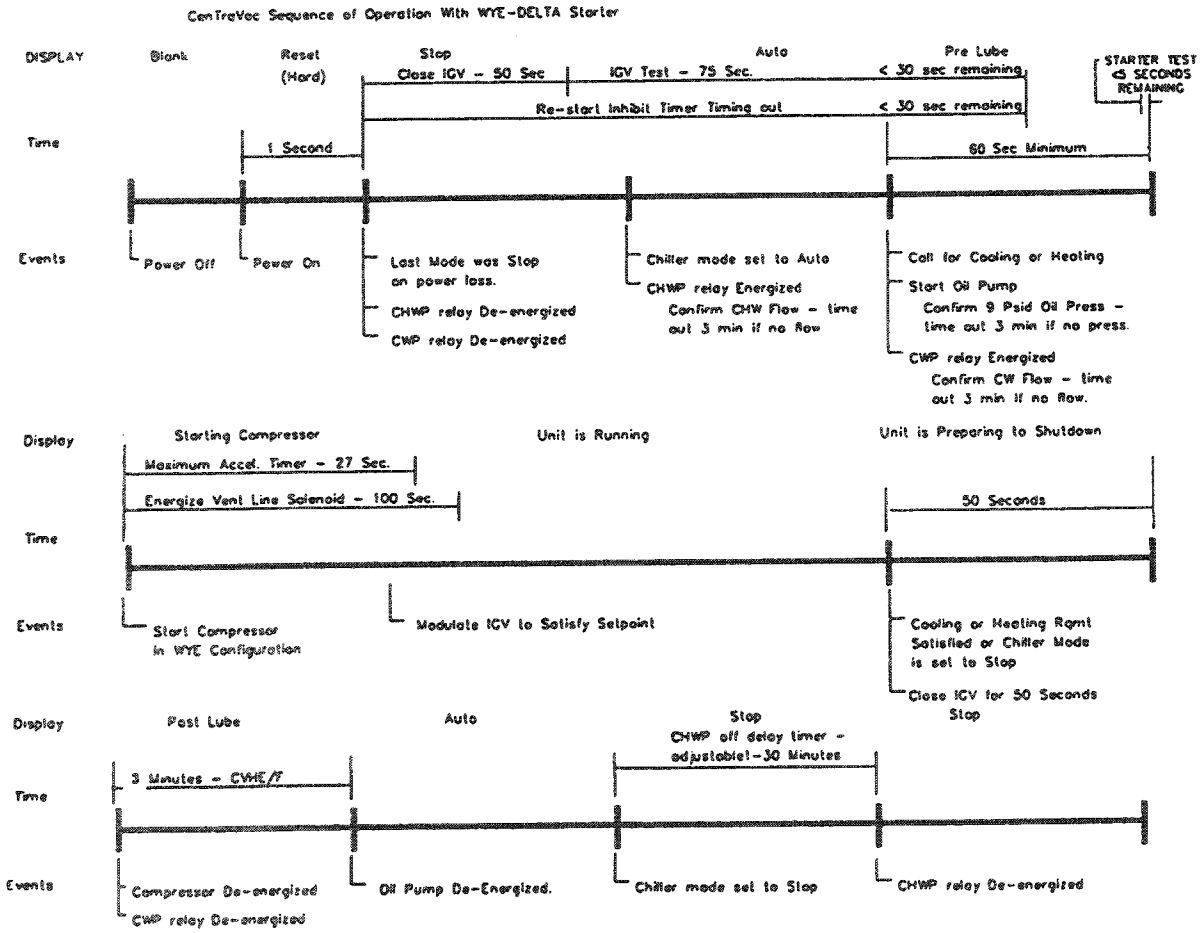

Procedure for Selecting Current Overload Settings for UCP2

1. Determine the design condition Rated Load Amps (RLA) from the Unit Nameplate or sales order information.

2. Refer to Table 4 or Table 5 as follows:

   Select Table 4 if any of the following conditions are met:

   a. The unit has a Trane supplied starter (unit or remote mounted) and is less than 600 v.
   b. The starter has a single CT per phase, wired directly to the Starter module

   Select Table 5 if any of the following conditions are met:

   a. The unit has a starter that was not supplied by Trane.
   b. The unit voltage is 600 v higher.
   c. The starter has two CTs per phase wired to the Starter module.

3. Using Table 4 or Table 5 (determined in Step 2), determine the CT Meter Scale Rating based on the the RLA from Step 1.

4. Calculate the CT factor using one of the following two equations:

   If Table 4 was used: (Single CT per phase)

   CT Factor = (Motor RLA/CT Meter Scale Rating) x 100

   If Table 5 was used: (Two CTs per phase)

   CT Factor = (Motor RLA/CT Meter Scale Rating) x 139

5. Refer to Table 6. Determine Current Overload Settings #1 and #2 based on the CT Factor that was calculated in Step 4 above.

Enter and verify the correct Current Overload Setting #1 and Current Overload Setting #2 in the unit control menus.

Table 4
CT Factor = (Motor RLA/CT Meter Scale Rating) x 100

Current Transformer Selection Table for Single CT/Phase Systems			
Motor RLA	**CT Part No.**	**Ext**	**CT Meter Scale Rating**
34-50A	X13580253 or X13580269	09	50A
51-67A		10	75A
68-100A		01	100A
101-134A		02	150A
135-184A		03	200A
185-267A		04	275A
268-334A		05	400A
335-467A		06	500A
468-667A		07	700A
668-935A		08	1000A
936-1260A		11	1400A
1261-1620A		12	1800A

Table 5
CT-Factor = (Motor RLA/CT Meter Scale Rating) x 139

Current Transformer Selection Table for Two CT/Phase Systems						
Line CT Part No.	**Ext**	**Line CT Ratio**	**CT Ter. Conn**	**No . of Prim. Turns**	**RLA Ranges**	**Meter Scale**
X13580272	-01	50:5	X1 to X2	3	8.0 - 11.9	16.7
				2	12.0 - 17.9	25.0
	-02	75:5		2	18.0 - 23.9	37.5
	-01	50:5		1	24.0 - 35.9	50
	-02	75:5			36.0 47.9	75
X13580271	-01	100:5			48.0 -72.0	100
X13580048		150:5			72.0 to 86.3	150
		180:5	X1 to X3		86.4 to 95.9	180
		200:5	X1 to X4		96.0 to 119.9	200
	-02	250:5	X1 to X2		120.0 to 143.9	250
		300:5	X1 to X3		144.0 to 167.9	300
		350:5	X1 to X4		168.0 to 191.9	350
	-03	400:5	X1 to X2		192.0 to 239.9	400
		500:5	X1 to X3		240.0 to 287.9	500
		600:5	X1 to X4		288.0 to 235.9	600
	-04	700:5	X1 to X2		336.0 to 383.9	700
		800:5	X1 to X3		384.0 to 479.9	800
		1000:5	X1 to X4		480.0 to 575.9	1000
	-05	1200:5	X1 to X2		576.0 to 719.9	1200
		1500:5	X1 to X3		720.0 to 863.9	1500
X13580047	-01	1800:5	X1 to X2		864.0 to 1007.9	1800
		2100:5	X1 to X3		1008.0 to 1199.9	2100
		2500:5	X1 to X4		1200.0 to 1800	2500
	-02	1000:5	X1 to X2		480.0 to 575.9	1000
		1200:5	X1 to X3		576.0 to 719.9	1200
		1500:5	X1 to X4		720.0 to 863.9	1500

(For medium and high voltage applications, not to exceed 6600 volts).

Table 6
CT Factor, Current Overload Settings #1 and #2

CT Factor	Current Overload Setting #1	Current Overload Setting #2
66	00	255
67	01	254
68	02	253
69	03	252
70	04	251
71	06	249
72	07	248
73	08	247
74	09	246
75	10	245
76	11	244
77	12	243
78	13	242
79	15	240
80	15	240
81	16	239
82	17	238
83	18	237
84	19	236
85	20	235
86	21	234
87	22	233
88	22	233
89	23	232
90	24	231
91	25	230
92	25	230
93	26	229
94	27	228
95	28	227
96	28	227
97	29	226
98	30	225
99	30	225
100	31	224

Periodic Maintenance

Overview

This section describes the basic chiller preventive maintenance procedures, and recommends the intervals at which these procedures should be performed. Use of a periodic maintenance program is important to ensure the best possible performance and efficiency from a CenTraVac® chiller.

Recommended purge maintenance procedures for the Purifier Purge unit are covered by PRG-OM-6A or the latest revision which can be obtained at the nearest Trane office.

Record Keeping Forms

An important aspect of the chiller maintenance program is the regular completion of records. Provided at the end of this manual are copies of the "Annual Inspection Check List and Report", "CenTraVac with UCP2 Commissioning Checklist and "Start-Up Test Log", a "Start-Up Test Log for Water Cooled CenTraVacs with UCP2 Control Panels" and "UCP2 "Settings Group" Menu Record". When filled out accurately by the machine operator, the completed logs can be reviewed to identify any developing trends in the chiller's operating conditions.

For example, if the machine operator notices a gradual increase in condensing pressure during a month's time, he can systematically check, then correct the possible cause (s) of this condition (e.g., fouled condenser tubes, non-condensable in the system, etc.)

Daily Maintenance and Checks

[ ] Check the chiller's evaporator and condenser pressures, oil tank pressure, differential oil pressure and discharge oil pressure. Compare the readings with the values provided in Table 7.

IMPORTANT: *IT IS HIGHLY RECOMMENDED THAT THE OPERATING LOG BE COMPLETED ON A DAILY BASIS.*

CAUTION

IF FREQUENT PURGING IS REQUIRED, MONITOR PURGE PUMPOUT RATE, IDENTIFY AND CORRECT SOURCE OF AIR OR WATER LEAK AS SOON AS POSSIBLE. Failure to do so can shorten chiller life expectancy, due to moisture contamination caused by leakage.

[ ] Check the oil level in the chiller oil sump using the 2 sight glasses provided in the oil sump head. When the unit is operating, the oil level should be visible in the lower sight glass.

Weekly Maintenance

[ ] Complete all recommended daily maintenance procedures and checks. Complete logs on a daily basis.

WARNING

WHEN SERVICING, LOCK UNIT DISCONNECT SWITCH IN OPEN POSITION. Failure to do so, may result in death or injury due to electrical shock or contact with moving parts.

Every 3 Months

[ ] Complete all recommended weekly maintenance procedures. Refer to the previous sections for details.

[ ] Clean all water strainers in the CenTraVac water piping system.

Every 6 Months

WARNING

WHEN SERVICING, LOCK UNIT DISCONNECT SWITCH IN OPEN POSITION. Failure to do so, may result in death or injury due to electrical shock or contact with moving parts.

Table 7
Normal Chiller Operating Characteristcs

Operating Characteristic	Normal Reading
Evaporator Pressure	12" to 18" Hg (Vacuum)
Condenser Pressure (See Notes 1 and 2)	2 to 12 PSIG (Standard Condensers)
Oil Sump Temperature:	
Unit Not Running	140 to 145 F
	(60 to 63)
Unit Running	62° F to 162° F
	(16.7°C to 72°C)
Differential Oil Pressure	18 to 22 psid

[ ] Complete all recommended quarterly maintenance procedures.

[ ] Lubricate the vane control linkage bearings, ball joints, and pivot points; as needed a few drops of light machine oil (e.g., SAE-20) is sufficient.

[ ] Lubricate first stage vane operator tang "O" rings by removing the setscrew and adding several drops of Trane Oil 0022. Replace setscrew. On CVHF 1470/1720 compressors remove fill and vent hole setscrews. Add grease (Rheolube 434a) until excess appears in vent hole. Replace setscrews.

[ ] Lubricate the oil filter shutoff valve "O" rings by removing the pipe plug and adding several drops of Trane Oil 0022. Replace plug.

[ ] Drain the contents of the rupture disc/purge discharge ventline drip-leg, into an evacuated waste container minimally and more often if the purge is operated excessively.

Also, apply 1 or 2 drops of oil on the vane operator shaft and spread it into a very light film; this will protect the shaft from moisture and rust.

Off-Season Maintenance

During those periods of time when the chiller is not operated, be sure the control panel is energized. This is to keep the purge operational, the oil heater warm and will also keep air out of the machine.

Annual Maintenance

Shut down the chiller once each year to check the items listed ; a more detailed inspection checklist is provided on the "Model CVHE, CVHF and CVHG CenTraVac Annual Inspection Checklist and Report" illustrated in this manual.

[ ] Perform the annual maintenance procedures referred to in the Maintenance Section of the purge manual.

[ ] Use an ice water bath to verify that the accuracy of the evaporator refrigerant temperature sensor (4RT5) is still within tolerance (i.e., + or - 2.0° at 32°F).

If the evaporator refrigerant temperature displayed on the UCP's read-out is outside this 4-degree tolerance range, replace the sensor.

Note: If the sensor is exposed to temperature extremes outside its normal operating range (0°F to 90°F) (-18°C to 32°C), check its accuracy at 6-month intervals.

Compressor Oil Change on CVHE, CVHF, CVHG

After the first six months of operation it is recommended to have the oil analyzed.

After 1000 hours and one year of operation it is recommended to change the oil and filter and have the removed waste oil analyzed.

Note: Use only Trane Oil 0022. A full oil change is 9 gallons of Oil 0022 with refrigerant pump and 7-1/2 gallons without refrigerant pump.

Beyond the first year, recommendations are to subscribe to an annual oil analysis program rather than change the oil automatically every year. This program will reduce the chiller's overall lifetime oil consumption and minimize refrigerant emissions. The oil analysis should be done by a qualified laboratory experienced in refrigerant/oil chemistry and the servicing of Trane centrifugal chillers.

In conjunction with other diagnostics performed by a qualified service technician, oil analyses can provide valuable information on the performance of the chiller to help minimize operating and maintenance costs and maximize it's operating life. A drain fitting is installed in the oil filter top, after the oil filter, for obtaining oil samples.

Oil Change Procedure

When oil analysis indicates the need to change compressor oil, use the following procedure for removing oil.

⚠ CAUTION
BE SURE TO OPEN CONTROL PANEL DISCONNECT SWITCH BEFORE DRAINING THE SUMP. Failure to do so could possibly burn out the oil sump heater.

[ ] Draw the oil from the chiller through the oil charging valve on the chiller oil sump into an approved, evacuated tank; or,

[ ] Pump the oil from the chiller through the oil charging valve into an air-tight resealable container, using a magnetically-driven auxiliary pump.

Forcing the oil from the oil sump by pressurizing the chiller (i.e. by raising chiller temperature or adding nitrogen) is not recommended.

Refrigerant dissolved in the oil can be removed and returned to the chiller by using an appropriate

deep-vacuum recovery unit and heating/agitating the oil container. Follow all Federal, State and Local regulations with regard to disposal of waste oil.

Replacing Oil Filter

Replace oil filter: (1) annually, (2) at each oil change, (3) or if erratic oil pressure is experienced during chiller operation.

Oil Filter Replacement

Use the following procedure to service the oil filter. Refer to Figure 26.

1. Run the oil pump for two to three minutes to insure that the oil filter is warmed up to the oil sump temperature.

2. Turn the oil pump motor off.

3. Pull the "D" handle on the rotary valve locking pin out of its detent and rotate the valve to the "DRAIN" position. An offset pointer is located on top of the valve with wrench flats to allow turning. the spring force on the locking pin should allow the pin to drop into a detent at this position.

4. Allow at least 15 minutes for the oil to drain from the filter back into the oil sump.

5. Pull the "D" handle to unlock the pin and rotate the valve to the "Change Filter" position. This isolates the filter from the unit. The locking pin should drop into a detent in this position.

6. Remove and replace the filter as quickly as possible. Tighten filter 2/3 to 3/4 turn per instructions written on the filter. Place the used filter in a reusable container. Follow all local, state and federal regulations to dispose of the filter.

Pull the "D" handle to unlock the pin and rotate the valve to the "RUN" position. The locking pin should drop into a detent in this position. The chiller is now ready for operation.

Other Maintenance Requirements

Compressors using new seal technology will not use O-rings. The O-ring has been replaced by Loctite 515 applied at a minimum film thickness of .010 applied across the width of the flange. The current jack bolt holes remain for disassembly.

⚠ CAUTION:
USE CARE WHEN APPLYING LOCTITE ON A JOINT. Failure to do so could result in Loctite getting into the chiller which may cause problems with the Oil supply system and eductor system.

[ ] Inspect the condenser tubes for fouling; clean if necessary.

[ ] Measure the compressor motor winding resistance to ground; a Qualified Service Technician should conduct this check to ensure that the findings are properly interpreted.

Contact a qualified service organization to leak-test the chiller; this procedure is especially important if the system requires frequent purging.

[ ] Use a nondestructive tube test to inspect the condenser and evaporator tubes at 3-year intervals.

Note: It may be desirable to perform tube tests on these components at more frequent intervals, depending upon chiller application. This is especially true of critical process equipment.

[ ] Depending on chiller duty, contact a qualified service organization to determine when to conduct a complete examination of the unit to discern the condition of the compressor and internal components.

Note: (a) Chronic air leaks, which can cause acidic conditions in the compressor oil and result in premature bearing wear; and, (b) Evaporator or condenser water tube leaks. Water mixed with the compressor oil can result in bearing pitting, corrosion, or excessive wear.

[ ] Submit a sample of the compressor oil to a Trane qualified laboratory for comprehensive analysis on an annual basis; this analysis determines system moisture content, acid level and wear metal content of the oil, and can be used as a diagnostic tool.

Lubrication

The only CVHE, CVHF and CVHG chiller component that requires periodic lubrication is the external vane linkage assembly and Rotary oil valve.

Lubricate the vane linkage shaft bearings and rod end bearings as needed with a few drops of light-weight machine oil.

Lubricate the 1st Stage IGV actuator O-Rings, by removing the pipe plug and adding several drops of Trane Oil 0022. Be sure and reinstall pipe plug.

The oil valve block rotary valve uses dual O'Rings to seal to atmosphere. These should be manually lubricated by removing the pipe plug at the valve lubrication port and placing a few drops of Trane Oil 0022 in the cavity. Be sure to reinstall the pipe plug when lubrication is completed.

Figure 26
Rotary Valve in Drain Position

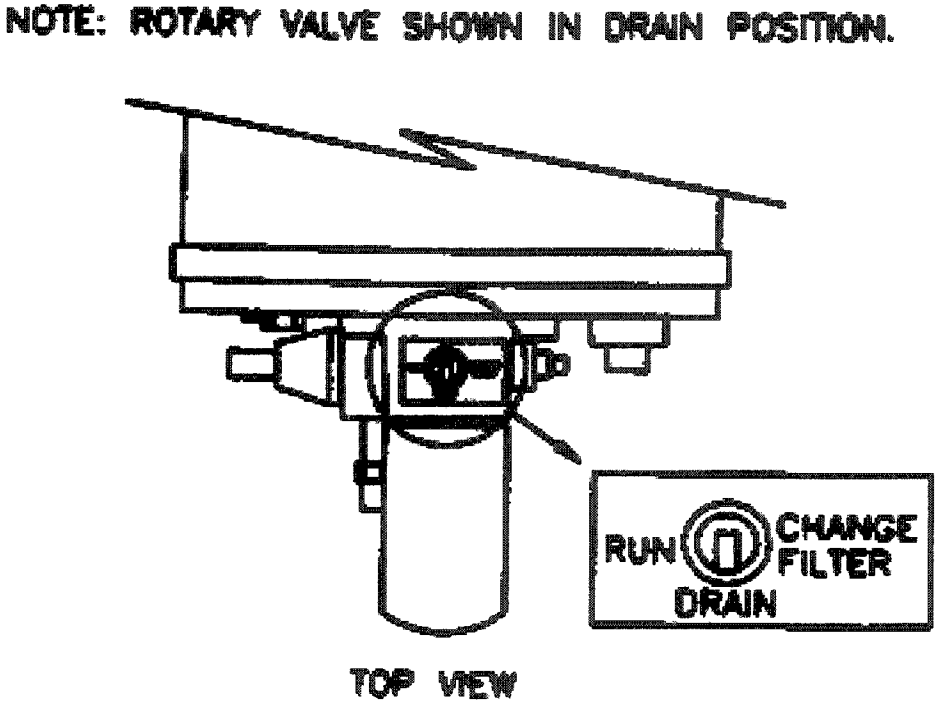

Front View with Refrigerant Pump

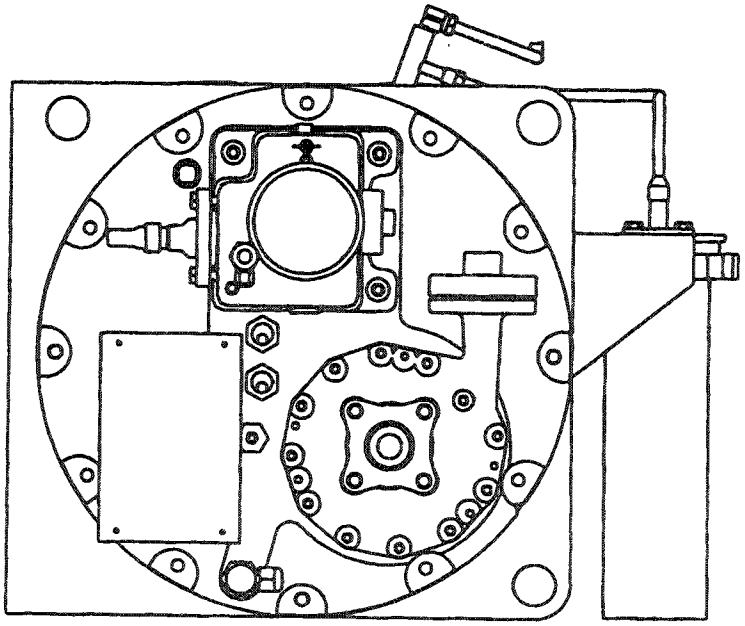

Periodic Maintenance

Refrigerant Charge

⚠ WARNING

CERTAIN PROCEDURES COMMON TO REFRIGERANT SYSTEM SERVICE MAY EXPOSE OPERATING AND/OR SERVICING PERSONNEL TO LIQUID AND/OR VAPOROUS REFRIGERANT. CLOSELY FOLLOW ALL SAFETY PROCEDURES DESCRIBED IN THE MATERIAL SAFETY DATA SHEET FOR THE REFRIGERANT CONTAINERS. Failure to do so could result in death or injury due to inhalation of, or skin exposure to refrigerant.

The refrigerant charging procedure for Trane centrifugal chillers is:

1. If water is present in the tubes, break machine vacuum with refrigerant vapor, or circulate water, to avoid tube damage.

2. Always use refrigerant compatible hoses or copper-tubing with self-sealing connections or shut-off valves.

3. Transfer the refrigerant using one of the following (listed in order of preference):

   a. An approved Trane low-pressure refrigerant recovery/recycle unit.

   b. The available pressure differential.

   c. Gravity. (Use a return vent line to refrigerant drums to equalize pressure.)

5. Do not use dry nitrogen to push refrigerant into the chiller as was common practice in the past. This will contaminate the charge and require excessive purging, which will result in unnecessary release of refrigerant.

6. Weigh in the proper charge.

7. Use recovery/recyle unit or vacuum pump to evacuate hoses; discharge outdoors.

8. If refrigerant is supplied in new returnable cylinders, be sure and refer to General Service Bulletin CVHE-SB-48B for information on returning cylinders. This service bulletin is available at the nearest Trane office.

Depending on the chiller duty, contact a qualified service organization to determine when to conduct a complete examination of the unit to discern the condition of the compressor and internal components.

Note: If your chiller is covered by a Trane extended warranty, the terms of that warranty may require that the procedures listed in the Periodic Maintenance section of this manual be followed for your extended warranty to remain in force. The terms may also require that the chiller be inspected by a Trane authorized warranty agent every 4 years or 40,000 operating hours, whichever occurs first. This inspection will include, at a minimum, a review of the annual inspection checklists and the daily operating logs, as well as performance of a leak test and a general inspection of the chiller. The owner is then required to follow the recommendations made as a result of this inspection at the owners expense.

Recovery and Recycle Connections

To facilitate refrigerant removal and replacement, newer-design CVHE, CVHF and CVHG units are provided with a 3/4-inch vapor fitting with shutoff valve on the chiller suction and with a 3/4-inch liquid connection with shutoff valve at the bottom of the evaporator shell.

Leak Testing

To leak-test a chiller containing full refrigerant charge, raise chiller pressure using a controlled hot water or electric-resistance system to a maximum of 8 psig. Do not use nitrogen, which will cause excessive refrigerant discharge by the purge system.

Cleaning the Condenser

CAUTION

DO NOT USE UNTREATED OR IMPROPERLY TREATED WATER. Failure to follow this caution could result in damaged equipment.

See Figure 27 which shows a Typical Chemical Cleaning Setup.

Figure 27
Typical Chemical Cleaning Setup

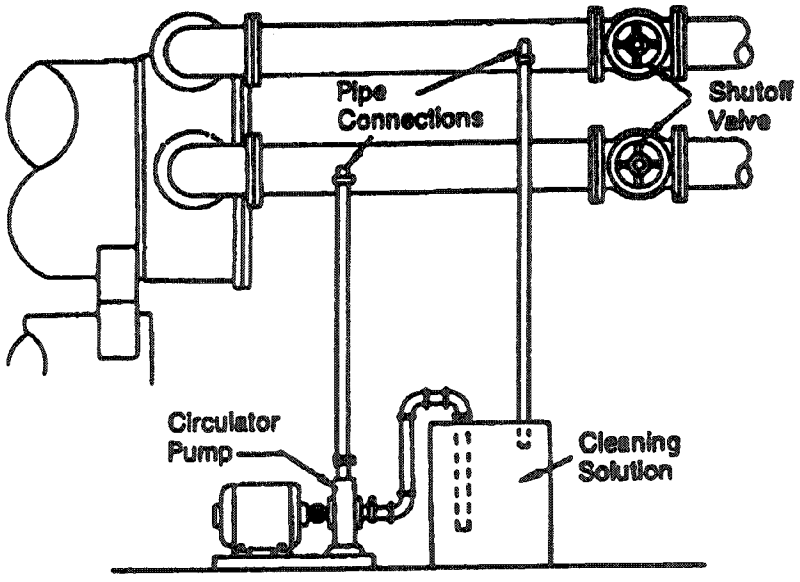

Condenser tube fouling is indicated when the approach temperature (the difference between the condensing refrigerant temperature and the leaving condenser water temperature) is higher than predicted.

If the annual condenser tube inspection indicates that the tubes are fouled, two cleaning methods, mechanical and chemical, can be used to rid the tubes of contaminants.

Use the mechanical cleaning method to remove sludge and loose material from smooth-bore tubes.

(To clean other types of tubes including internally-enhanced types, consult a qualified service organization for recommendations).

1. Remove the retaining nuts and bolts from the water box covers at each end of the condenser. Use a hoist to lift the covers off the water box. (A threaded connection is provided on each water box cover to allow insertion of an eyebolt).

2. Work a round nylon or brass bristled brush (attached to a rod) in and out of each of the condenser water tubes to loosen the sludge.

3. Thoroughly flush the condenser water tubes with clean water.

Scale deposits are best removed by chemical means. Be sure to consult any qualified chemical house in the area (i.e., one familiar with the local water supply's chemical mineral content) for a recommended cleaning solution suitable for the job. Remember, a standard condenser water circuit is composed solely of copper, cast iron and steel.

⚠ CAUTION

USE CARE WHEN CHEMICAL CLEANING THE UNIT. Failure to do so can damage the unit.

IMPORTANT: *ALL OF THE MATERIALS USED IN THE EXTERNAL CIRCULATION SYSTEM, THE QUANTITY OF THE SOLUTION, THE DURATION OF THE CLEANING PERIOD, AND ANY REQUIRED SAFETY PRECAUTIONS SHOULD BE APPROVED BY THE COMPANY FURNISHING THE MATERIALS OR PERFORMING THE CLEANING.*

REMEMBER, HOWEVER, THAT WHENEVER THE CHEMICAL TUBE CLEANING METHOD IS USED, IT MUST BE FOLLOWED UP WITH MECHANICAL TUBE CLEANING, FLUSHING AND INSPECTION.

Cleaning the Evaporator

Since the evaporator is typically part of a closed circuit, it does not accumulate appreciable amounts of scale or sludge. Normally, cleaning every 3 years is sufficient. However, on open CVHE, CVHF and CVHG systems, such as air washers, periodic inspection and cleaning is recommended.

Control Settings and Adjustments

A list of CVHE, CVHF and CVHG time delays and safety control cutout settings is provided in Table 1 in the Chiller Control System section of this manual. For control calibration and check-out, contact a Trane qualified service organization.

Purge System

Because some sections of the chiller's refrigeration system operate at less-than-atmospheric pressure, the possibility exists that air and moisture may leak into the system. If allowed to accumulate, these non-condensibles become trapped in the condenser; this increases condensing pressure and compressor power requirements, and reduces the chiller's efficiency and cooling capacity.

The Trane Purifier Purge is the only purge system available for the CVHE, CVHF and CVHG chiller. The purge is designed to remove non-condensable gases and water from the refrigeration system. Purifier Purge unit operation, maintenance and trouble shooting is covered by a separate operation and maintenance manual, PRG-OM-6A or the latest issue, which may be obtained from the nearest Trane office.

Installed Unit Extended Storage

Overview

This section describes extended storage requirements for UCP2 installed CVHE, CVHF and CVHG chillers to be removed from service for an undetermined length of time.

Unit Preparation

The following steps are necessary in order to properly prepare a unit for storage.

1. Remove all liquid refrigerant if the unit is charge.

⚠ WARNING

TO AVOID INJURY OR DEATH DUE TO INHALATION OF, OR SKIN EXPOSURE TO REFRIGERANT, CLOSELY FOLLOW ALL SAFETY PROCEDURES DESCRIBED IN THE MATERIAL SAFETY DATA SHEET. Failure to do so may expose operating and/or servicing personnel to liquid and/or vaporous refrigerant.

2. After the liquid refrigerant is removed, using a recovery/recycle unit or vacuum pump, pull a vacuum to remove remaining refrigerant vapor from the unit.

3. After all traces of refrigerant are out of the unit, a positive nitrogen charge should be put into the unit (6 to 8 psig). This positive pressure must be checked monthly to insure no noncondensibles get into the unit. Use a pressure gage on the evaporator shell to verify that the 6 to 8 psig dry nitrogen holding charge is still in the chiller. If this charge has escaped, contact a qualified service organization and the Trane sales engineer that handled the order.

4. The refrigerant charge should be stored in proper refrigerant containers. Due to possible leakage, do not store in used drums.

5. Maintain control power to the control panel. This will maintain oil temperature in the oil sump and the capability of the control panel to present report information. The Chiller, Refrigerant and Compressor Reports should be viewed once a week for normal readings. Any abnormal observation must be reported to the Trane Sales Engineer that handled the order.

⚠ WARNING

USE CARE WHEN MEASUREMENTS, ADJUSTMENTS OR OTHER SERVICE-RELATED OPERATIONS ARE PERFORMED WITH POWER ON. Failure to do so could result in death due to electrical shock or contact with moving parts.

6. Remove the factory installed jumper or the field installed wiring on terminals J5-1 and J5-2 on the 1U1 Chiller Module in the unit control panel. This will prevent unwanted chiller operation.

7. Set the purge operating mode to OFF on UCP2 chillers.

8. The oil can be left in the unit.

9. The water side should not cause a problem if shut down and drained. There may be slight scaling inside the tubes, but not enough to cause a problem. Customer should inspect and clean tubes before the unit is returned to service.

IMPORTANT: *DO NOT USE UNTREATED OR IMPROPERLY TREATED WATER, OR EQUIPMENT DAMAGE MAY OCCUR.*

IMPORTANT: *SCALE DEPOSITS ARE BEST REMOVED BY CHEMICAL MEANS. BE SURE TO CONSULT ANY QUALIFIED CHEMICAL HOUSE IN THE AREA (I.E., ONE FAMILIAR WITH THE LOCAL WATER SUPPLY'S CHEMICAL MINERAL CONTENT) FOR A RECOMMENDED CLEANING SOLUTION SUITABLE FOR THE JOB.*

10. Motor bearings: If the motor sits for a long time the bearings could take a set and cause bearing problems/replacement later. Once every six months the chiller oil pump must be started and the compressor motor bump started to rotate the shaft. Contact a qualified service organization to perform this task. If the compressor motor cannot be bump started, then the shaft must be rotated manually by a qualified service organization.

11. Obtain an oil analysis initially after 6 months of storage, and once each succeeding year. If no oil breakdown is evident do not change the oil. If breakdown is evident, the oil must be replaced.

12. If the unit is stored for more than five years, and the storage is expected to be indefinite, the unit should be examined for leaks every five years from the initial storage date.

13. When the unit is to be returned to service, the services of a qualified service organization should be obtained to conduct all activities associated with the startup of a new chiller.

Annual Inspection Check List and Report: CenTraVacs® w/UCP2 Control Panels

Compressor Motor

[ ] Motor continuity check
Good [ ] Open [ ]

[ ] Check and tighten motor terminals

[ ] Meg motor
Phase 1 [ ] Phase 2 [ ] Phase 3 [ ]

[ ] Check nameplate rating
Amps [ ]

Starter

[ ] Check condition of starter contacts
Good [ ] Fair [ ] Replace [ ]

Oil Sump

[ ] Change oil
If oil analysis, refer to program procedures
[ ] Gallons (7) required

[ ] Oil pump motor ground check
Good [ ] Open [ ]

[ ] Check motor terminals

[ ] Change oil filter

Condenser

[ ] Visually inspect for scaling in tubes:
note findings and make recommendations

Control Circuits

[ ] Low refrigerant temperature sensor check-out
__ F set point __ F trip point (ice water)

[ ] Leaving Evaporator water temperature sensor check-out
__ F set point __ F trip point (ice water)

[ ] Condenser High Pressure Switch check-out
__ psig set point
__ psig trip point

[ ] Check Net Oil Pressure

[ ] Check adjustment and operation of inlet guide vane actuator stepper motor. The stroke of the actuator motor is 10,000 steps/in and approximately 46,000 to 54, 000 steps full stroke. (**Note**: each machine is unique and must have the 90° number of steps input.)

Leak Test Chiller

Refrigerant and oil analysis for acid content.

[ ] Sample refrigerant and oil for laboratory analysis (attach copy of analysis to next monthly inspection report)

Purge Unit

[ ] Perform the purge system control check described in"Control Circuit Diagnostics" in the "Troubleshooting" section of the most current Purge operation and maintenance manual.

Comments: _____

_____

_____

_____

Recommendations: _____

_____

_____

_____

_____

Note: This form is suggested for your use.

TRANE®

CenTraVac®
Checksheet and Request for Serviceman

To: _____ Trane Service Company

S.O. No.: _____ Serial No.: _____

Job/Project Name: _____

The following items are being installed and will be complete by _____

1. CenTraVac
In place and piped. Do not insulate CenTraVac or adjacent piping. The contractor is responsible for any foreign material left in the unit. .....☐

2. Piping
Chilled water piping connected to:
- CenTraVac .....☐
- Air handling units.....☐
- Pumps .....☐

Condenser and heat recovery condenser (as applicable) piping connected to:
- CenTraVac .....☐
- Pumps .....☐
- Cooling tower.....☐
- Heating loop .....☐

Make-up water connected to cooling tower .....☐
Water supply connected to filling system .....☐
Systems filled .....☐
Pumps run, air bled from system.....☐
Strainers cleaned.....☐

3. Flow Balancing Valves Installed
Leaving chilled water .....☐
Leaving condenser water .....☐
Heat recovery condenser leaving water .....☐

4. Wiring
Compressor motor starter has been furnished by or approved by The Trane Company, La Crosse, WI.....☐
Power available .....☐
Interconnecting wiring, starter to control panel..☐
External interlock (flow switches, water pump aux., etc.) .....☐

Motors connected on:
- CenTraVac* .....☐
- Chilled water pump.....☐

Cooling tower fan rotation checked .....☐
Condenser water pump .....☐
Heat recovery condenser water pump (as applicable) .....☐
Power available for vacuum pump .....☐
(115V AC).....☐
All controls installed and connected .....☐
All magnetic starters installed and connected ...☐

*NOTE: Do not make final connections to compressor motor until requested by Trane Service Representative.

5. Testing
Dry nitrogen available for pressure testing .....☐
Trace gas amounts of Refrigerant-22 available for leak testing, if necessary.....☐

6. Refrigerant On Job Site .....☐

7. Gauges, Thermometers and Air Vents
Installed on both sides of evaporator.....☐
Installed on both sides of condenser and heat recovery condenser (as applicable).....☐

8. System Can Be Operated Under Load Conditions.....☐

9. Electrician, Control Man and Contractor's Representative Are Available to Evacuate, Charge and Test the CenTraVac under Serviceman's Supervision.....☐

In accordance with your quotation and our purchase order number _____

We will therefore require your serviceman on the job by** _____

This is to certify that the CenTraVac(s) has been properly and completely installed and the applicable items listed above have been completed.

**Advance notification is required to allow scheduling of the start-up as close to the requested date as possible.

Compliance To ASHRAE Standard 15

Yes	No	1. Is this an outdoor installation? If yes, skip to "Owner Awareness of Safe Refrigerant Handling Procedures".
Yes	No	2. Does the equipment room have a refrigerant monitor/sensor capable of monitoring and alarming within the acceptable exposure level (AEL) of the refrigerant?
Yes	No	3. Does the equipment room have an audible or visual alarm (other than the light on the monitor) which is controlled by the monitor?
Yes	No	4. Does the equipment room have mechanical ventilation?†
Yes	No	5. Is a self-contained breathing apparatus required by local building code? If no, go to question 7.
Yes	No	6. Is a self-contained breathing apparatus available in close proximity of the equipment room?
Yes	No	7. Are the purge discharge and the rupture disk piped to the outdoors?

† The mechanical ventilation consists of two flow requirements i.e., a two-speed fan where the high speed is sized by the formula Cfm = 100 x the square root of the pounds of refrigerant of the largest chiller, and low speed is 0.5 Cfm per square foot of the equipment room space. (This requirement is for chillers located within the building which is the most common.)

Owner Awareness Of Safe Refrigerant Handling Procedures

Yes	No	1. Has the owner been fully instructed on the proper use of refrigerant 123?
Yes	No	2. Was the owner given a copy of the MSDS for HCFC-123?
Yes	No	3. Was the owner given a copy of Trane publication "CFC-GUIDE-2, Refrigerant Handling Guidelines"?

Additional time required to complete the start-up and adjustment due to incompleteness of the installation will be invoiced at prevailing rates.

Serial Number _____

Serial Number _____

Serial Number _____

Serial Number _____

Serial Number _____

Checklist Completed By: _____

_____

_____

Signed: _____

Dated: _____

Notice To Trane Service Agency:
A copy of this completed form must be submitted to the CenTraVac Technical Service Department in La Crosse, WI, prior to the actual start-up date.

1-27.08-6

TRANE	CENTRAVAC WITH UCP2 COMMISSIONING CHECKLIST & START-UP TEST LOG

Job name _____ **Location** _____
Model # _____ **Serial #** _____
Sales Order # _____ **Start-up Date** _____

NOTE: The Unit Installation, Operation and Maintenance Manuals, Submittals, and Design Specifications must be used in conjunction with this checklist. **(INCLUDING WARNINGS AND CAUTIONS)**

I. PRECOMMISIONING PROCEDURES

A. Obtain Installation Check Sheet
This must be prepared by installer for a particular unit, verifying the unit is ready for commissioning.

B. Obtain Design (order) Specification Data
This indicates the design criteria of the particular unit. A unit cannot be properly commissioned unless this data is known. It is the responsibility of the selling office to furnish this data.

C. Obtain Wiring Diagrams
The "as-wired" electrical diagram should be compatible with the recommended Trane submittals and diagrams. Are customer added external/remote control circuits compatible? ☐ Yes ☐ No

D. General Installation Observations

☐ 1. Is there any apparent shipping or rigging damage? ☐ Yes ☐ No

☐ 2. Record the pressure on the shipping gauge_____PSIG. If there is no pressure on the gauge, A leak test will have to be done before the unit can be evacuated and charged.

☐ 3. Is the water piping correctly installed? ☐Yes ☐No
Flow Switches ☐ Yes ☐ No Pressure Gauges ☐ Yes ☐ No
Isolations Valves ☐ Yes ☐ No Flow Balancing Valves ☐ Yes ☐ No
Thermometer Wells ☐ Yes ☐ No Vent Cocks and Drains ☐ Yes ☐ No

☐ 4. Have proper clearances around the unit been maintained per submittal and/or installation Are there Manual guidelines available? ☐ Yes ☐ No

☐ 5. Is power wiring of adequate ampacity and correct voltage? ☐Yes ☐No
Are fuses or circuit breakers of the correct value or type? ☐Yes ☐No

☐ 6. Is the unit base acceptable, level, and is the unit on isolators (rubber as supplied by Trane or spring type)? ☐ Yes ☐ No

☐ 7. Have the micro (less than 30 volts) circuits been properly isolated from the higher voltage control and power circuits? ☐ Yes ☐ No

E. Comments_____
_____
_____

1

II. COMMISSIONING PROCEDURES

A. Pre-start Operations

1. Holding Charge

☐ _____ PSIG. Must be positive pressure or leak test must be done.
☐ Before relieving the holding charge, calibrate the H.P.C. high-pressure control. This is a check of pressure to the H. P. C. as well as calibration of the control. Disconnect and cap the flare. Calibrate H.P.C. reconnect flare.
☐ Relieve the holding charge.

2. Calibration of High Pressure Cutout

☐ Calibrate the HPC to cut out when 15 PSIG is exceeded. The cut in value is approximately 10 PSIG. CUT OUT____PSIG, CUT IN____PSIG.

3. Meggar the Motor (500 volt Meggar)

☐ Compressor motor Megohms -- refer to temp/resistance chart for acceptable values. Remove surge suppressors before Megging. Never Meg test with the unit in a vacuum.

T1 to Earth____	T4 to Earth____T1 to T2____	T1 to T4____
T2 to Earth____	T5 to Earth____T1 to T3____	T2 to T5____
T3 to Earth____	T6 to Earth____T2 to T3____	T3 to T6____

4. Evacuation

☐ Connect the vacuum pump to start evacuation. Use a 2-stage pump with at least 5 CFM capacity Connect to the evaporator-charging valve with a hose no smaller than ¾ inch ID.

5. Condenser

☐ Isolation and flow valves installed.

☐ Calibrated thermometers and pressure gauges installed in/out condenser on machine side of any valve or elbow.

☐ If condenser pump controlled by UCP2, is field wiring correct and complete?

☐ Condenser pump(s) run, system and strainers properly cleaned and/or flushed.

☐ Condenser water strainer in close proximity to entering connection of condenser.

☐ Previsions installed to properly maintain water treatment additives.

☐ Initial water treatment added to system.

☐ Flow or differential pressure switch installed and wired in series with auxiliary of pump motor starter. Operation of circuit verified.

☐ Condenser water flow balance. Ft H2O PD design ____, Ft H2O actual____
GPM design_____ GPM actual____

6. Evaporator

- ☐ ____PSIG. Must be positive pressure or leak test must be done.
- ☐ Calibrated thermometers and pressure gauges installed in/out of evaporator on machine side of any valve or elbow.
- ☐ If evaporator pump controlled by UCP2, is field wiring correct and complete?
- ☐ Evaporator pump(s) run 24 hrs. System and strainers properly cleaned and/or flushed.
- ☐ Evaporator water strainer in close proximity to entering connection of evaporator.
- ☐ Provisions installed to properly maintain water treatment additives.
- ☐ Initial water treatment added to system.
- ☐ Flow or differential pressure switch installed and wired in series with auxiliary of pump motor starter. Operation of circuit verified.
- ☐ Evaporator water flow balanced. Ft H2P PD design____, Ft H2O PD actual____
  GPM design____ GPM actual_____

7. Electrical and Controls

a. Motor starter panel

- ☐ All terminals tightened.
- ☐ Wiring free from abrasion, kinks and sharp corners.
- ☐ Contactors and relays have freedom of movement.
- ☐ All contacts are free of corrosion or dirt. Panel is free of dust, debris etc.
- ☐ Check the ratio of the current transformers. Record the part #s on the start-up log.
- ☐ Use only twisted shielded pair for the IPC circuit between the starter and the UCP2 on remote starters. Recommended wire is Belden 8760, 18 AWG. Polarity is critical.
- ☐ The low voltage IPC link (< 30 volts) must be in a separate conduit from the 115-volt wiring.
- ☐ IPC link routing within the starter panel must stay a minimum of 6 inches from higher voltages.
- ☐ Remote starter to UCP2 connections are complete and comply with Trane requirements.

☐ Check the correctness of the power connections from the starter to the motor.

☐ Check the wiring to the starter for size, voltage and correct phase rotation (A-L1, B-L2, and C-L3).

- ☐ Check the equal phase representation in each power-wiring conduit.

b. Control panel

☐ All terminals tightened.

☐ Wires free from abrasion, kinks and sharp corners.

☐ Low voltage wires are isolated from high voltage wires.

☐ Panel is free of debris, dust etc.

☐ "Power up" the control panel.

1. Starter disconnect locked open.
2. Fuse 2F4 must be removed from the starter.'
3. Connect auxiliary 115VAC-power cord to Terminals 1TB1-1 and 1TB1-2 in the control panel. **MAKE SURE OF THE POLARITY. THE 'HOT' SIDE MUST BE CONNECTED TO TERMINAL 1TB1-1 AND THE 'NEUTRAL' SIDE TO 1TB1-2.**
4. Plug in cord to 115VAC-power source. Control panel is now energized.

☐ Record the settings found in the Operator Settings, Service Settings Field Start-up Group, and Machine Configuration Menus in the UCP2.

☐ Using the CVHE Operation and Maintenance manual and the order specification, double check and reset, if required, the settings of Current Overload Setting #1 and Current Overload Setting #2 found in the Machine Configuration menu of the UCP2.

NOTE: DO NOT FORGET TO ADJUST THE RLA RATING TO MATCH THE ACTUAL JOBSITE VOLTAGE IF IT DIFFERS FROM THE DESIGN VOLTAGE.

☐ If Evaporator and/or condenser water pumps are controlled by the UCP2, use the Service Test Menu of the UCP2 to manually start and test the control of the pumps.

☐ Check the setting of the oil pressure-regulating valve.

1. Use the Service Tests menu of the UCP2 to manually start the oil pump.
2. Proceed to the Compressor Report menu of the UCP2 and observe the Differential Oil Pressure
3. Adjust the oil pressure-regulating valve to maintain 12 to 18 psid. The oil pressure-regulating valve may require adjustment as the unit is started.
4. This procedure also checks to ensure correct sensing of oil pressure. The Oil Pressure Cutout setting is a non-adjustable 9 psid within the logic of the UCP2.
5. Return Oil Pump control to 'auto'.

☐ Check vane operator and vanes.

1. Use the Service Tests menu of the UCP2 to manually override the vane control.
2. Enter targets from 0% to 100% and observe vane operation. At minimum and maximum travel the operator should not exert any force on the vane assembly, adjust as required.
3. Vane movement is smooth to open/close.
4. Vane movement is reported back to the UCP2.
5. Return Vane control to 'auto'.

☐ Dry run the starter
1. Make sure the starter disconnect is safely locked open.
2. Use the Service Tests menu of the UCP2 to initiate the Starter Dry Run.
3. Observe correct operation of starter contactors.
4. Observe correct operation of transition complete signal (if required).
5. Disable Starter Dry Run when complete.

☐ Disconnect and remove the temporary power cord.

B. Preparation for Start-up.

1. Evacuation and charging

☐ Evacuation leak test. When vacuum has been drawn down to .5-1 MM Hg, (500-1000 microns) secure the vacuum pump. Wait for 12 hours for a valid vacuum leak test. If the rise in vacuum is less .5 mm (500 microns) per 12 hours, start-up may proceed.

☐ Charge refrigerant. **MAKE SURE THE CHILLED WATER IS FLOWING THROUGH THE EVAPORATOR.** Charge the prescribed amount of refrigerant through the liquid charging valve at the liquid inlet to the evaporator. Check that all drums contain a full amount of refrigerant. Amount charged_____lbs/kg.

2. Electrical

☐ Disconnect all temporary power cords, replace all fuses, connect motor leads, make final electrical inspection.

☐ Power up the motor starter. Check for control voltage at control panel terminals 1TB1-1 and 1TB1-2. _____volts.

☐ Check current to the oil sump heater. ____amperes

☐ As the oil heats up, finish any operations not yet completed in preparation for starting the unit.

C. Chiller Start-up

1. Make all preliminary checks.

☐ Oil temp, oil level, chilled water flow, chilled water load available (cooling units on) etc.

2. Start the unit.

☐ If the phase rotation of the electrical power has not been positively confirmed, the actual rotation of the motor must be checked. Observe the rotation of the motor shaft through the sight glass on the end of the motor at the moment of start-up. Rotation must be CLOCKWISE. If the phase sequence is incorrect, confirmed by observation of the Phase Reversal diagnostic on the UCP2, then L1 and L3 power leads to the starter must be reversed.

☐ As the unit starts and runs, observe closely all operating conditions.

☐ Adjust the oil pressure regulator if necessary to 18 to 22 psi net.

- ☐ In the Operator Settings menu of the UCP2, place the Purge Operating Mode to 'on' to allow the removal of non-condensables. It may also be necessary to increase the length of the Purge Service Override timer found in the Field Startup Group menu.

- ☐ After the unit has the system down to design leaving chilled water temp and is under control, and the purge is no longer relieving non-condensables, begin taking the start-up test log. Log the unit a minimum of 3 times at 15-minute intervals.

- ☐ In the Operator Settings menu of the UCP2, return the purge-operating mode to 'Adaptive'.

- ☐ When the logging is complete, shut the chiller down. Allow the unit to sit idle for 5-10 minutes. Attach a piece of clear plastic hose between the ½ inch valve at the bottom of the evaporator and the ¼ inch valve near the top of the evaporator. Open the valves and record or mark permanently the refrigerant level in the hose. Record this level – it is very important! At some later time, the refrigerant charge can be easily checked and verified.

- ☐ Restart the chiller and carefully observe the starting and loading sequence.

3. Instructions to the Chiller Operator.

   - ☐ Instructions for starting, operating, and shutting down.

   - ☐ Instructions for logging the unit.

   - ☐ Instructions for periodic maintenance.

D. After 2 weeks of operation. (International Units Only)

1. Remove the water box covers on both the evaporator and condenser. Mechanically brush clean all the tubes. This is to assure there is no debris blocking any of the tubes. A piece of debris partially blocking a tube may cause that tube to fail prematurely.

2. Replace the oil filter with the spare oil filter included in the control panel at time of shipment.

E. Comments and/or Recommendations:

_____
_____
_____
_____
_____
_____
_____
_____

_____

Service Technician Signature Date

TRANE

Start-Up Test Log
Water Cooled CenTraVac® With UCP2 Control Panel

Job Name _____ Job Location _____

Model # _____ Serial # _____ Start Date _____

Sales Order # _____ Ship Date _____ Job Elevation (Ft. above sea level) _____

STARTER DATA:

Manufacturer _____

Type _____

(Star-Delta, X-Line, AutoTrans, Primary Reactor, Solid-State, Etc.)

Vendor ID #/Model # _____

Volts _____ Amps _____ Hz _____

MOTOR DATA:

Manufacturer _____

Type and Frame _____

Drawing # _____

Serial # _____

COMPRESSOR DATA: (RTHB Units Only)

Model # _____

Serial # _____

NAMEPLATE DATA:

RLA _____ KW _____ VOLTS _____ HZ _____

DESIGN DATA: (From Design Specification)

RLA _____ KW _____ VOLTS _____ HZ _____

HEAT RECOVERY PERFORMANCE:

RLA _____ KW _____ VOLTS _____ HZ _____

CURRENT TRANSFORMER

PART NUMBERS: ("X" Code and 2-Digit Extension)

Primary CT's:

X _____ - ____

X _____ - ____

X _____ - ____

Secondary CT's:

X _____ - ____

X _____ - ____

X _____ - ____

(Note: Secondary CT's are used only on remote starters "by others" and high voltage applications)

START-UP ONLY

CHILLER CONDITION:

On Arrival:

☐ Machine Vacuum = _____ mm (CVHE/F)

Or

☐ Machine Pressure = _____ psig (CVHE/F or RTHB)

At Start-Up:

☐ Machine Vacuum = _____ mm

Or

☐ Machine Pressure = _____ psig

Complete If Pressure Test Is Required:

☐ Vacuum after Leak Check = ____ mm

☐ Standing Vacuum Test = _____ mm Rise in ____ Hours

UNIT REFRIGERANT CHARGE:

_____ lbs. of R- _____

HIGH PRESSURE CUTOUT (3S1):

☐ Cut-In = _____ psig ☐ Cutout = _____ psig

SUMMARY OF UNIT OPTIONS INSTALLED:

☐ Tracer Communications Interface

☐ Remote Clear Language Display Module

☐ Options Module

☐ Outdoor Air Sensor

☐ Entering Condenser Limit Control

☐ Heat Recovery/Aux. Condenser

☐ Free Cooling Control

☐ Hot Gas Bypass Control

☐ Ice Making Control

☐ Monitoring Package

- ☐ Bearing Oil Temp. Sensors
- ☐ Discharge Temp. Sensor
- ☐ Compressor Phase Volt Sensors

☐ Other _____

Also complete the Commissioning Checklist, Record Sheet and Start-Up/Operation Log

1-27.90-5—(399)
Supersedes 1-27.90-5—(296)

Sales Order # _____ Location _____

Model # _____ Serial # _____

DESIGN CONDITIONS**	CHILLER REPORT:		1ST READING	2ND READING	3RD READING
**From design specification	CHILLER OPERATING MODE				
DEG F _____ →	ACTIVE CHILLED WATER SETPOINT				
DEG F _____ →	EVAP LEAVING WATER TEMP				
DEG F _____ →	EVAP ENTERING WATER TEMP				
DEG F _____ →	CONDENSER ENTERING WATER				
DEG F _____ →	CONDENSER LEAVING WATER				
	ACTIVE CURRENT LIMIT SETPOINT				
GPM _____ →	EVAPORATOR WATER FLOW				
GPM _____ →	CONDENSER WATER FLOW				
	OUTDOOR AIR TEMPERATURE				
	REFRIGERANT REPORT:				
	EVAP REFRIGERANT PRESSURE				
	COND REFRIGERANT PRESSURE				
	SATURATED COND TEMP				
	SATURATED EVAP REFRIGERANT TEMP				
	COMPRESSOR REPORT:				
	COMPRESSOR DISCHARGE TEMP (OPT.)				
(12 TO 18 PSID) →	DIFFERENTIAL OIL PRESSURE				
(UNIT 'ON' 30 F ABOVE SAT.	OIL TANK TEMPERATURE				
EVAP. TEMP. TO 150 F)	DISCHARGE OIL PRESSURE				
	OIL TANK PRESSURE				
DESIGN RLA _____ →	COMPRESSOR PHASE AMPS	A			
DESIGN KW _____ →	COMPRESSOR PHASE AMPS	B			
	COMPRESSOR PHASE AMPS	C			
DESIGN VOLTS _____ →	COMPRESSOR VOLTAGE	AB			
DESIGN HZ _____ →	COMPRESSOR VOLTAGE	BC			
	COMPRESSOR VOLTAGE	CA			
	COMPRESSOR WINDING TEMP	W1			
	COMPRESSOR WINDING TEMP	W2			
	COMPRESSOR WINDING TEMP	W3			
	COMPRESSOR STARTS				
	COMPRESSOR RUNNING TIME				
	BEARING TEMPERATURE 1				
	BEARING TEMPERATURE 2				
	OPERATING OIL LEVEL				
	VIBRATION READINGS AT THRUST BEARING END (OPT.)	HORIZONTAL			
		VERTICAL			
		AXIAL			

FRONT PANEL CHILLED WATER SETPOINT: _____ DESIGN DELTA TEMP SETPOINT: _____

LEAVING WATER TEMP CUTOUT SETPOINT: _____ LOW REFRIGERANT TEMP CUTOUT SETPOINT: _____

CURRENT OVERLOAD SETTING #1: _____ CURRENT OVERLOAD SETTING #2: _____

EVAPORATOR WATER PRESSURE DROP:	CONDENSER WATER PRESSURE DROP:	PURGE
DESIGN PSIG: _____ GPM: _____	DESIGN PSIG: _____ GPM: _____	RUN HRS _____
ACTUAL PSIG: _____ GPM: _____	ACTUAL PSIG: _____ GPM: _____	SUC TEMP _____ DEG F

UNIT MOUNTED REFRIGERANT MONITOR READOUT (OPT.)

SINGLE POINT _____ 4 CHANNEL SCANNER: 1. _____ 2. _____ 3. _____ 4. _____

MOTOR INSULATION MEG OHMS: @ Megger Voltage _____

TER. 1 TO GND _____ TER. 1-2 _____ TER. 1-4 _____

TER. 2 TO GND _____ TER. 1-3 _____ TER. 2-5 _____

TER. 3 TO GND _____ TER. 2-3 _____ TER. 3-6 _____

TECHNICIAN:

OWNER'S REP.:

DATE:

ACTIVE AND HISTORIC DIAGNOSTICS: _____

COMMENTS: _____

Also Complete CVHE/F UCP2 Commissioning Checklist and Record Sheet

1-27.90-5—(Back)—(399)
Supersedes 1-27.90-5—(Back)—(296)

CenTraVac® Adaptive Frequency Drive™ Startup and Operating Log	
Sales Order #	Location
Model #	Drive Model #
Serial #	Drive Serial #

Prestart Checklist	✓ When Completed	Comments
Motor is Grounded		
Verified Drive Parameter Settings		
Drive Chassis Grounded		
Control Wiring & Drive Connections Tight		
Water Pump Rotation		
Distilled Water in Primary Water Loop		
Corrosion Inhibitor Installed		

UCP2 Control Settings		
Name	Default	Setting
Starter Type	AFDB	
Condenser Pressure Sensor Option	Installed	
AF Adjustable Speed Control Algorithm Enable	Enable	
AF Leaving Water Standard Deviation	1.0	
AF Pressure Coefficient Constant	800	
AF Re-optimization Factor	0.30	
AF Re-optimization Timer	24	
AF Boundary Pressure Coefficient Y Intercept	0.40	
AF Boundary Pressure Coefficient Y Intercept Maximum	2.00	
AF Pressure Error Deadband	0.030	
AF Proportional Speed Gain	50	

(P) AFDB Parameter Settings: Record Number and Setting			
Number	Setting	Number	Setting
1. P000		11. P010	
2. P001		12. P011	
3. P002		13. P012	
4. P003		14. P013	
5. P004		15. P014	
6 P005		16. P015	
7. P006		17. P016	
8. P007		18. P017	
9. P008		19. P018	
10.P009		20. P019	

(P) AFDB Parameter Settings: Record Number and Setting			
Number	Setting	Number	Setting
21. P020		57. P056	
22. P021		58. P057	
23. P022		59. P058	
24. P023		60. P059	
25. P024		61. P060	
26. P025		62. P061	
27. P026		63. P062	
28. P027		64. P063	
29. P028		65. P064	
30. P029		66. P065	
31. P030		67. P066	
32. P031		68. P067	
33. P032		69. P068	
34. P033		70. P069	
35. P034		71. P070	
36. P035		72. P071	
37. P036		73. P072	
38. P037		74. P073	
39. P038		75. P074	
40. P039		76. P075	
41. P040		77. P076	
42. P041		78. P077	
43. P042		79. P078	
44. P043		80. P079	
45. P044		81. P080	
46. P045		82. P081	
47. P046		83. P082	
48. P047		84. P083	
49. P048		85. P084	
50. P049		86. P085	
51. P050		87. P086	
52. P051		88. P087	
53. P052		89. P088	
54. P053		90. P089	
55. P054		91. P090	
56. P055		92. P091	

(U) AFDB Parameter Settings: Record Number and Setting			
Number	Setting	Number	Setting
1. U000		26. U025	
2. U001		27. U026	
3. U002		28. U027	
4. U003		29. U028	
5. U004		30. U029	
6. U005		31. U030	
7. U006		32. U031	
8. U007		33. U032	
9. U008		34. U033	
10. U009		35. U034	
11. U010		36. U035	
12. U011		37. U036	
13. U012		38. U037	
14. U013		39. U038	
15. U014		40. U039	
16. U015		41. U040	
17. U016		42. U041	
18. U017		43. U042	
19. U018		44. U043	
20. U019		45. U044	
21. U020		46. U045	
22. U021		47. U046	
23. U022		48. U047	
24. U023		49. U048	
25. U024			

(R) AFDB Parameter Settings: Record Number and Setting			
Number	Setting	Number	Setting
1. R030			
2. R035			
3. R036			
4. R037			

TRANE

Rockwell Automation

START-UP PROCEDURES
TRANE LIQUI-FLO VARIABLE FREQUENCY DRIVE
PRE START-UP CHECKLIST AND SERVICE REQUEST

Use this form to check for proper installation of the Rockwell Automation Liqui-Flo VFD. For start-up service, please fax this completed form to: **Rockwell Automation -- LaCrosse, WI FAX: 1-608-781-7182** to schedule start-up. Please allow three weeks to arrange for start-up services.

JOB LOCATION_____INSTALLING CONTRACTOR_____

STREET_____CONTRACTOR CONTACT_____

CITY_____CONTACT PHONE_____

PRE START-UP CHECKLIST

PRIOR TO ROCKWELL AUTOMATION BEING ON SITE, CONFIRM THAT THE FOLLOWING ACTIONS HAVE BEEN COMPLETED (OR WILL BE COMPLETED PRIOR TO THE SCHEDULED START-UP):

	YES
1. The Trane Liqui-Flo VFD is mounted and wired per the CVHE-OM-8 Operation & Maintenance manual and/or wiring diagram (if separately supplied).	☐
2. The A-C primary line voltage is the proper voltage.	☐
3. The Trane chiller is ready to start and operate under load conditions. All preliminary start-up checks have been completed as detailed in the appropriate Installation Operation Maintenance manual, such as (evacuation, charging, all wiring & electrical work, chiller and AFD control settings checked, etc...).	☐
4. The Personnel have been selected to assist the Rockwell Automation service representative with the operation of the equipment and the facility layout.	☐

REQUEST FOR SERVICE REPRESENTATIVE

I acknowledge that all four of the above items have been completed. I understand that if upon job inspection these requirements are not met, no start-up work will be performed and travel time and mileage will be charged at current hourly rates.

NAME_____COMPANY_____

PHONE_____FAX_____

DATE/TIME DESIRED_____ALTERNATE DATE/TIME_____

START-UP SERVICE COVERED BY P.O.#_____

LiquiFlo
LIQUID COOLED AC DRIVE

TRANE

Operation Maintenance

Water Cooled CenTraVac™ With CH530

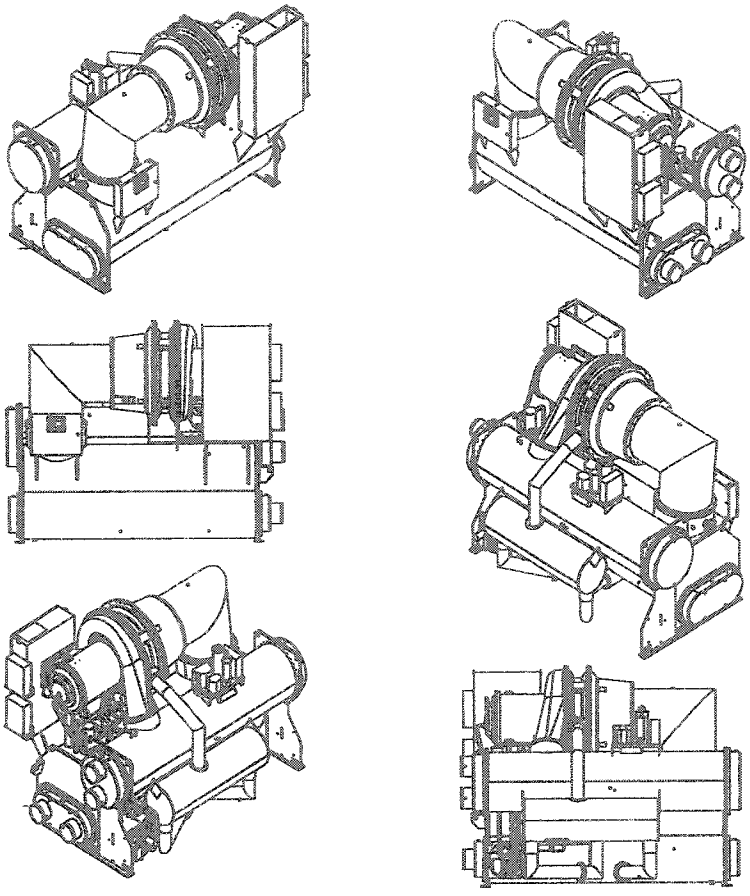

X39640712050

CVHE-SVU01E-EN

Warnings and Cautions

Warnings and Cautions
Notice that warnings and cautions appear at appropriate intervals throughout this manual. Warnings are provided to alert installing contractors to potential hazards that could result in personal injury or death, while cautions are designed to alert personnel to conditions that could result in equipment damage.

Your personal safety and the proper operation of this machine depend upon the strict observance of these precautions.

NOTICE:

Warnings and Cautions appear at appropriate sections throughout this manual. Read these carefully.

⚠ **WARNING** – Indicates a potentially hazardous situation which, if not avoided, could result in death or serious injury.

⚠ **CAUTION** – Indicates a potentially hazardous situation which, if not avoided, may result in minor or moderate injury. It may also be used to alert against unsafe practices.

CAUTION – Indicates a situation that may result in equipment or property-damage-only accidents.

© 2005 American Standard All rights reserved

Contents

Warnings and Cautions
General Information
Unit Control Panel (UCP)
Operator Interface
Chilled Water Setpoint
Inter Processor Communication (IPC)
Control System Components
Controls Sequence of Operation
Machine Protection and Adaptive Control
Unit Startup
Unit Shutdown
Periodic Maintenance
Oil Maintenance
Maintenance
Forms

General Information

Literature change
Applicable to CVHE, CVHF, CVHG

About this manual
Operation and maintenance information for models CVHE, CVHF and CVHG are covered in this manual. This includes both 50 and 60 Hz. CVHE, CVHF and CVHG centrifugal chillers equipped with the Tracer CH530 Chiller Controller system. Please note that information pertains to all three chiller types unless differences exist in which case the sections are broken down by Chiller type as applicable and discussed separately.

By carefully reviewing this information and following the instructions given, the owner or operator can successfully operate and maintain a CVHE, CVHF or CVHG unit.

If mechanical problems do occur, however, contact a qualified service organization to ensure proper diagnosis and repair of the unit.

Note: The CH530 controller was first applied to CVHE with Design Sequence "3K", and to CVHF with Design Sequence "1W".

Unit Nameplate

The unit nameplate is located on the left side of the unit control panel. The following information is provided on the unit nameplate.

1. Serial Number
The unit serial number provides the specific chiller identity. Always provide this serial number when calling for service or during parts identification..

2. Service Model Number
The service model represents the unit as built for service purposes . It identifies the selections of variable unit features required when ordering replacements parts or requesting service.

Note: Unit-mounted starters are identified by a separate number found on the starter.

3. Product Coding Block
The CVHE, CVHF and CVHG models are defined and built using the product definition and selection (PDS) system. This system describes the product offerings in terms of a product coding block which is made up of feature categories and feature codes. An example of a typical product code block is given on this page. The coding block precisely identifies all characteristics of a unit.

4. Identifies unit electrical requirements

5. Correct operating charges and type of refrigerant

6. Unit Test Pressures and Maximum Operating Pressures

7. Identifies unit Installation and Operation and Maintenance manuals

8. Drawing numbers for Unit Wiring Diagrams

Typical Product Description Block

MODL CVHE	DSEQ 2R	NTON 320	VOLT 575	REF 123
HRTZ 60	TYPE SNGL	CPKW 142	CPIM 222	TEST AIR
EVTM IECU	EVTH 28	EVSZ 032S	EVBS 280	
EVWC STD	EVWP 2	EVWT NMAR	EVPR 150	
EVCO VICT	EVWA LELE	CDTM IECU	CDTH 28	
CDSZ 032S	CDBS 250	CDWC STD	CDWP 2	
CDWT NMAR	CDPR 150	CDCO VICT	CDWA LELE	
CDTY STD	TSTY STD	ECTY WEOR	ORSZ 230	
PURG PURE	WCNM SNMP	SPKG DOM	OPTI CPDW	
HHOP NO	GENR NO	GNSL NO	SOPT SPSH	
ACCY ISLS	HGBP WO	LUBE SNGL	AGLT CUL	
CNIF UCP	SRTY USTR	SRRL 207	PNCO TERM	

General Information

An example of a typical model number is:

CVHF091NAL00ACU2758W7E8TB C0000000K01G14C10W1A03B1

Model Number Digit Identification

C = (1st digit) CenTraVac® Hermetic

V = (2nd digit) CenTraVac® Hermetic

H = (3rd digit) Direct Drive

F = (4th digit) Development sequence

091 = (5th, 6th, and 7th digit) Nominal compressor tonnage

N = (8th digit) Unit Voltage

A = (9th digit) Unit Type
- A = Cooling Condenser
- B = Heat Recovery Condenser
- C = Auxiliary Condenser
- D = Free Cooling Option
- S = Special

L0 = (10th and 11th digit) Design Sequence

0 = (12th digit) Hot Gas By-Pass
- W = With HGB
- 0 = Without HGB
- S = Special

A = (13th) Starter type
- A = Star-Delta Unit Mounted
- C = Star Delta – Remote Mounted
- E = X-Line Full Volt – Remote Mounted
- F = Autotransformer – Remote Mounted
- G = Primary Reactor – Remote Mounted
- H = X-Line Full Volt – Unit Mounted
- J = Autotransformer – Unit Mounted
- K = Primary Reactor – Unit Mounted
- L = Solid State – Unit Mounted
- M = Solid State – Floor Mounted
- N = Solid State – Wall Mounted
- P = Adaptive Frequency Drive - Unit Mounted
- R = Customer Supplied

C = (14th digit) Control Enclosure
- S = Special
- C = Standard Control Enclosure

U = (15th digit) Compressor Motor Power (kw)

275 = (16th, 17th, and 18th digit) Compressor Imp Cutback

8 = (19th digit) Evaporator Shell Size

W = (20th digit) Evaporator Tube Bundle

7 = (21st digit) Evaporator Tubes

E = (22nd digit) Evaporator Waterbox

8 = (23rd digit) Condenser Shell Size

T = (24th digit) Condenser Tube Bundle

B = (25th digit) Condenser Tubes

C = (26th digit) Condenser Waterboxes

0 = (27th digit) Heat Recovery Condenser Shell Size

0 = (28th digit) Heat Recovery Condenser Tube Bundle

0 = (29th digit) Heat Recovery Condenser Tubes

0 = (30th digit) Heat Recovery Condenser Waterboxes

0 = (31st digit) Auxiliary Condenser Size and Waterboxes

0 = (32nd digit) Auxiliary Condenser Tubes

0 = (33rd digit) Orifice Size

K = (34th digit) Orifice Size

0 = (35th digit) Unit Option

1 = (36th digit) Control: Enhanced protection

G = (37th digit) Control: Generic BAS

1 = (38th digit) Control: Extended operation

4 = (39th digit) Tracer communication interface

C = (40th digit) Control: Condenser refrigerant pressure

1 = (41st digit) Control: Tracer IO

0 = (42nd digit) Special Options

W = (43rd digit) Control: Water flow control

1 = (44th digit) Control: Chilled water reset

A = (45th digit) Control: Heat Recovery temperature sensors

0 = (46th digit) Gas Powered Chiller

3 = (47th digit) Compressor Motor Frame Size

B = (48th digit) Volute Discharge Angle

1 = (49th digit) Control: Operating status

W = (50th digit) Industrial Chiller Package (INDP)
- 0 = Without INDP
- W = With INDP

1 = (51st digit) Control Power Transformer (CPTR)
- 0 = Without CPTR
- 1 = With CPTR
- S = Special

B = (52nd digit) Motor and Terminal Board Configuration
- A = Six Lead Low Voltage
- B = Three Lead Medium Voltage
- C = Six Lead Medium Voltage
- S = Special

General Information

Commonly Used Acronyms

For convenience, a number of acronyms are used throughout this manual. These acronyms are listed alphabetically below, along with the "translation" of each:

AFD = Adaptive Frequency Drive

ASME = American Society of Mechanical Engineers

ASHRAE = American Society of Heating, Refrigerating and Air Conditioning Engineers

BAS = Building Automation System

CABS = Auxiliary Condenser Tube-Bundle S

CDBS = Condenser Bundle Size

CDSZ = Condenser Shell Size

CH530 = Tracer CH530 Controller

DV = DynaView™ Clear Language Display, also know as the Main Processor (MP)

CWR = Chilled Water Reset

CWR' = Chilled Water Reset Prime

DTFL = Design Delta-T at Full Load (i.e., the difference between entering and leaving chilled water temperatures)

ELWT = Evaporator Leaving Water Temperature

ENT = Entering Chilled Water Temperature

FC = Free Cooling

GPM = Gallons-per-minute

HGBP = Hot Gas Bypass

HVAC = Heating, Ventilating, and Air Conditioning

IE = Internally-Enhanced Tubes

IPC = Interprocessor Communication

LBU = La Crosse Business Unit

LCD = Liquid Crystal Display

LED = Light Emitting Diode

MAR = Machine Shutdown Auto Restart (Non-Latching where chiller will restart when condition corrects itself.)

MMR = Machine Shutdown Manual Restart (Latching where chiller must be manually reset.)

MP = Main Processor

PFCC = Power Factor Correction Capacitor

PSID = Pounds-per-Square-Inch (differential pressure)
PSIG = Pounds-per-Square-Inch (gauge pressure)

UCP = Unit Control Panel

LLID = Low Level Intelligent Device (Sensor, Pressure Transducer, or Input/output UCP module)

RLA = Rated Load Amps

RTD = Resistive Temperature Device

Tracer CH530= Controls Platform utilized on this Chiller

TOD = Temperature Outdoor

Control Optional Packages

OPST Operating Status Control

GBAS Generic Building Automation Interface

EXOP Extended Operation

CDRP Condenser Pressure Transducer

TRMM Tracer Communications

FRCL Free Cooling

HGBP Hot Gas Bypass

WPSR Water pressure sensing

EPRO Enhanced Protection

ACOS Auxillary Condenser sensors

CWR Chiller Water reset outdoor

General Information

Overview

CVHE, CVHG, CVHF

Each CVHE, CVHG, or CVHF unit is composed of 5 basic components.

- the evaporator,
- 3-stage compressor on CVHE, CVHG or 2 stage compressor on CVHF,
- 2-stage economizer on CVHE, CVHG, or single economizer on CVHF,

See Figure 1 for Typical CVHE and CVHG, and Figure 2 for Typical CVHF major components.

A heat-recovery or auxiliary condenser can be factory-added to the basic unit assembly to provide a heat-recovery cycle.

- water-cooled condenser,
- related interconnecting piping.

Figure 1. General CVHE and CVHG unit components

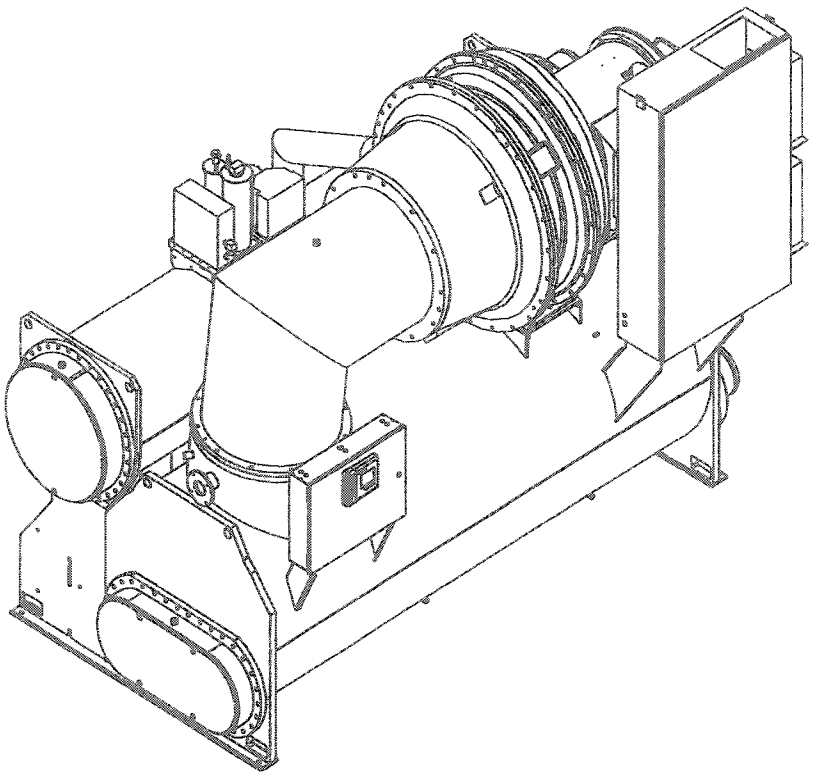

General Information

Figure 1. General CVHE and CVHG unit components - continued

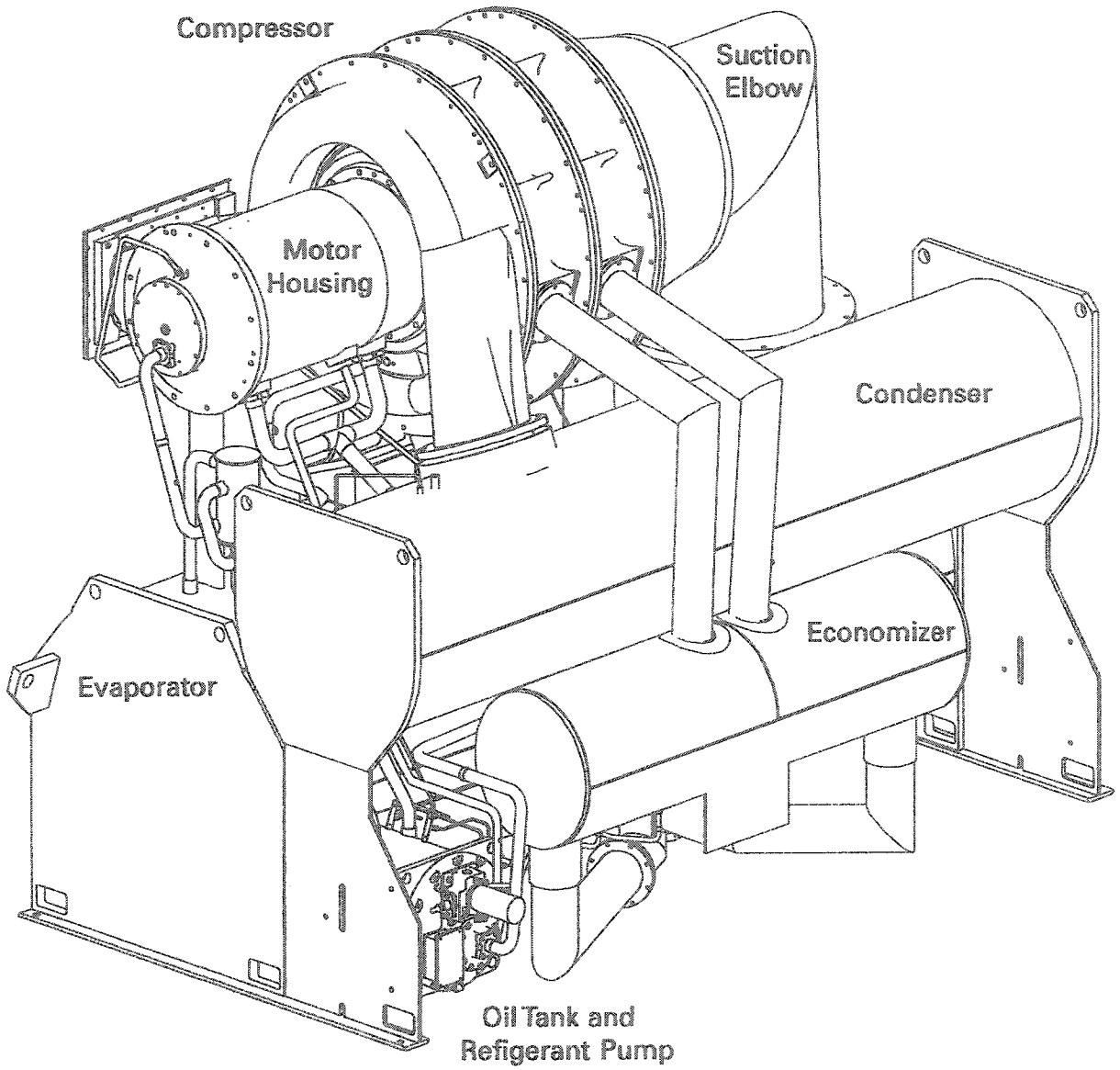

General Information

Figure 2. Illustrates the general component layout of a typical CVHF chiller

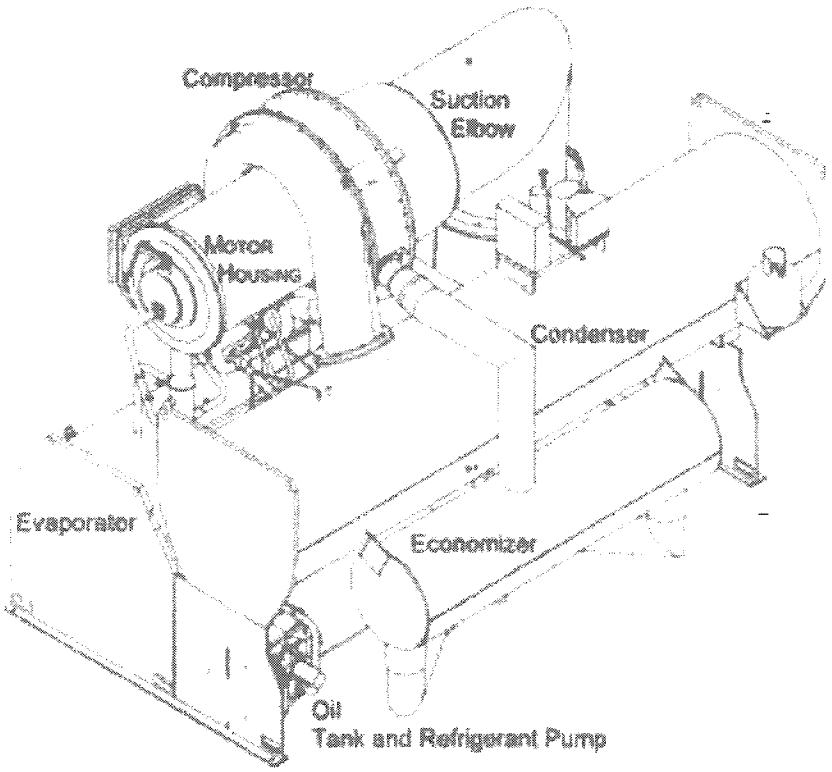

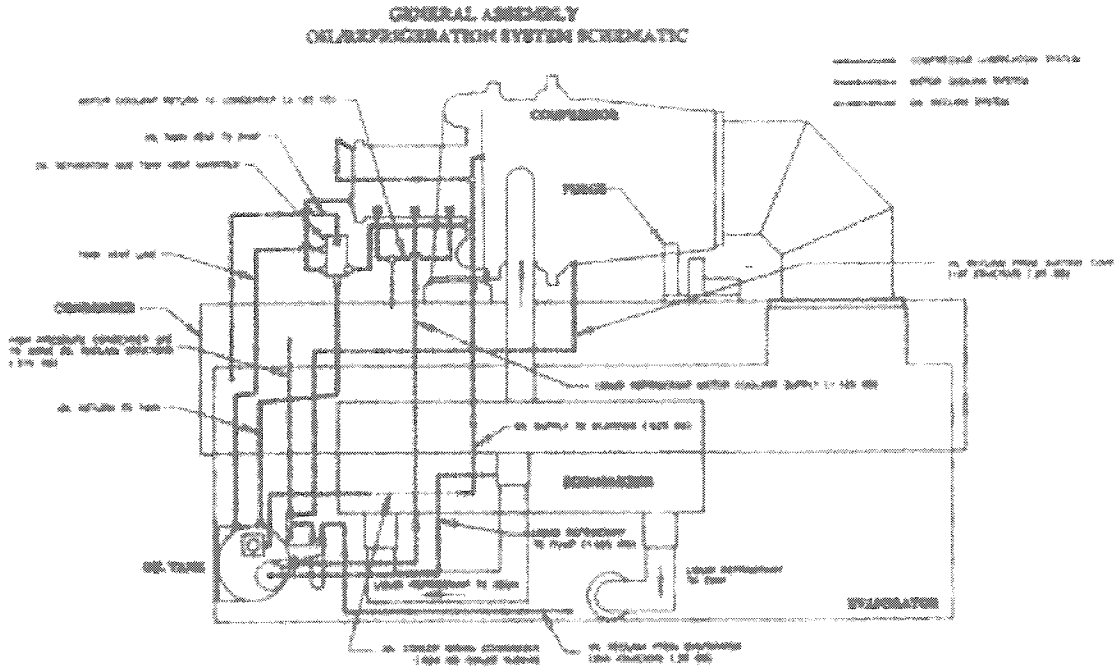

General Information

Cooling Cycle

CVHE, CVHG, CVHF

When in the cooling mode, liquid refrigerant is distributed along the length of the evaporator and sprayed through small holes in a distributor (i.e., running the entire length of the shell) to uniformly coat each evaporator tube. Here, the liquid refrigerant absorbs enough heat from the system water circulating through the evaporator tubes to vaporize.

The gaseous refrigerant is then drawn through the eliminators (which remove droplets of liquid refrigerant from the gas) and first-stage variable inlet guide vanes, and into the first stage impeller.

Note: Inlet guide vanes are designed to modulate the flow of gaseous refrigerant to meet system capacity requirements; they also prerotate the gas, allowing it to enter the impeller at an optimal angle that maximizes efficiency at all load conditions.

CVHE, CVHG Compressor

Compressed gas from the first-stage impeller flows through the fixed, second-stage inlet vanes and into the second-stage impeller.

Here, the refrigerant gas is again compressed, and then discharged through the third-stage variable guide vanes and into the third stage impeller.

Once the gas is compressed a third time, it is discharged into the condenser. Baffles within the condenser shell distribute the compressed refrigerant gas evenly across the condenser tube bundle. Cooling tower water circulated through the condenser tubes absorbs heat from the refrigerant, causing it to condense. The liquid refrigerant then passes through orifice plate "A" and into the economizer.

The economizer reduces the energy requirements of the refrigerant cycle by eliminating the need to pass all gaseous refrigerant through three stages of compression. See Figure 3. Notice that some of the liquid refrigerant flashes to a gas because of the pressure drop created by the orifice plates, thus further cooling the liquid refrigerant. This flash gas is then drawn directly from the first (Chamber A) and second (Chamber B) stages of the economizer into the third-and second-stage impellers of the compressor, respectively.

All remaining liquid refrigerant flows through another orifice plate "C" to the evaporator.

CVHF Compressor

Compressed gas from the first-stage impeller is discharged through the second-stage variable guide vanes and into the second-stage impeller. Here, the refrigerant gas is again compressed, and then discharged into the condenser.

Baffles within the condenser shell distribute the compressed refrigerant gas evenly across the condenser tube bundle. Cooling tower water, circulated through the condenser tubes, absorbs heat from the refrigerant, causing it to condense. The liquid refrigerant then flows out of the bottom of the condenser, passing through an orifice plate and into the economizer.

The economizer reduces the energy requirements of the refrigerant cycle by eliminating the need to pass all gaseous refrigerant through both stages of compression. See Figure 6. Notice that some of the liquid refrigerant flashes to a gas because of the pressure drop created by the orifice plate, thus further cooling the liquid refrigerant. This flash gas is then drawn directly from the economizer into the second-stage impellers of the compressor.

All remaining liquid refrigerant flows out of the economizer, passes through another orifice plate and into the evaporator.

General Information

Figure 3. CVHE, CVHG pressure enthalpy curve

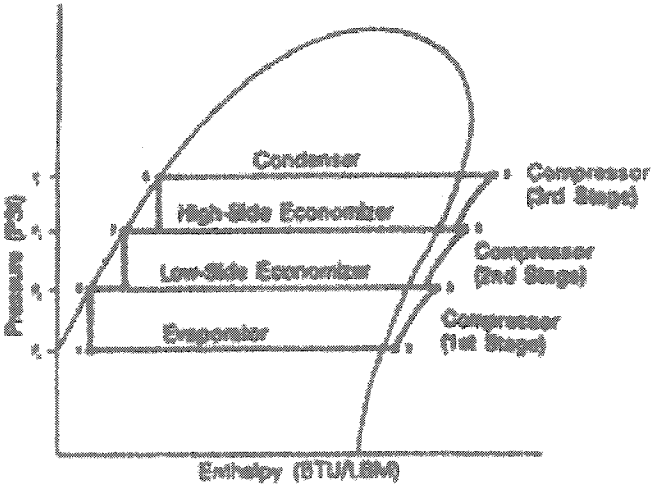

Figure 4. CVHE, CVHG 2-stage economizer

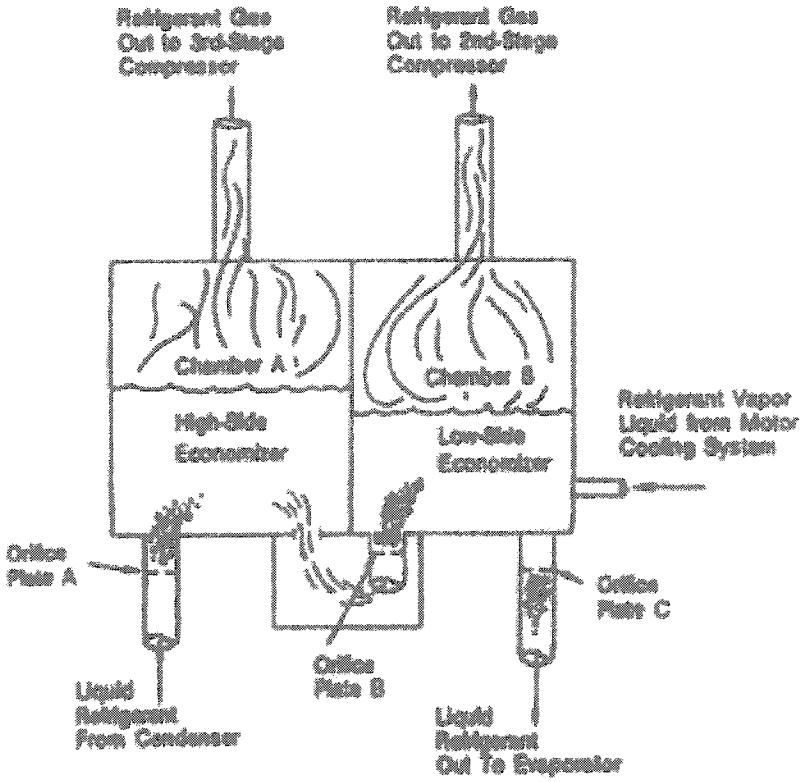

General Information

Figure 5. CVHF pressure enthalpy curve

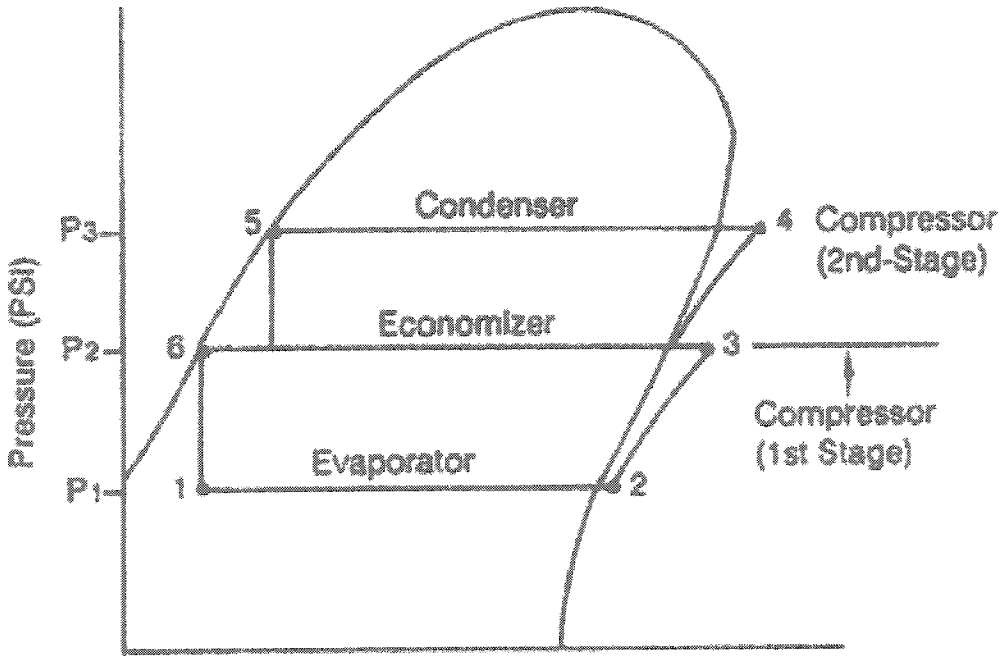

Figure 6. CVHF single stage economizer

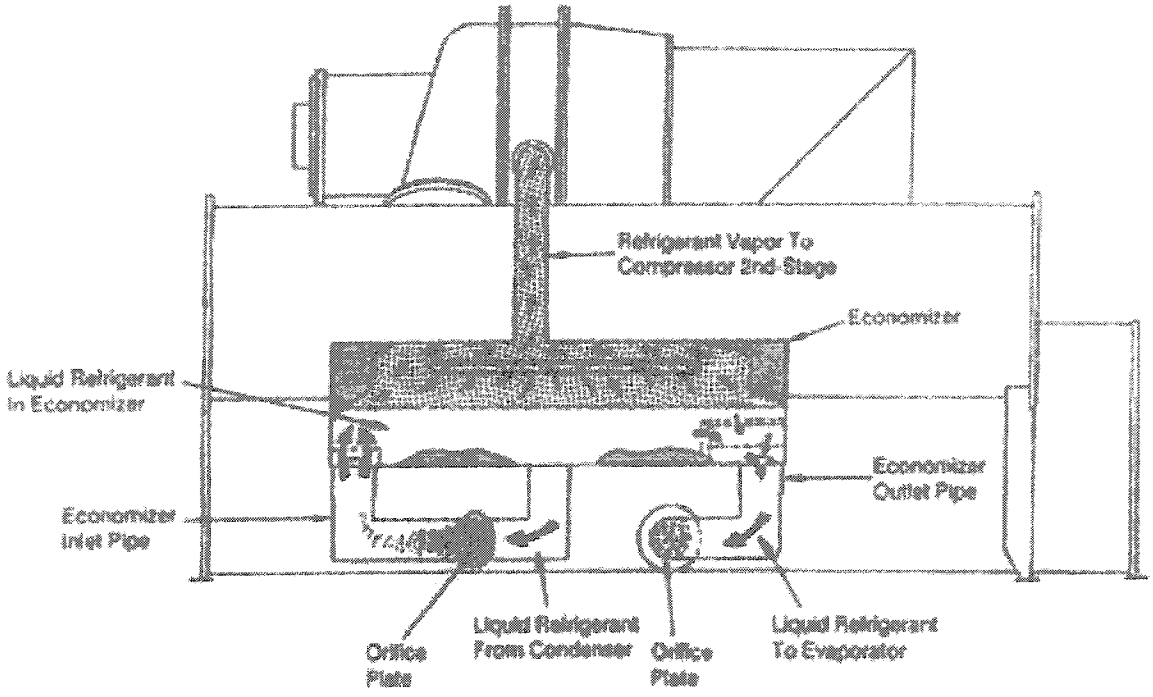

General Information

Overview

Controls Operator Interface
Information is tailored to operators, service technicians and owners

When operating a chiller, there is specific information you need on a day-to-day basis — setpoints, limits, diagnostic information, and reports.

When servicing a chiller, you need different information and a lot more of it — historic and active diagnostics, configuration settings, and customizable control algorithms, as well as operation settings.

By providing two different tools – one for daily operation and one for periodic service — everyone has easy access to pertinent and appropriate information.

DynaView™ Human Interface
— For the operator
Day-to-day operational information is presented at the panel. Up to seven lines of data (English or SI units) are simultaneously displayed on the ¼ VGA touch-sensitive screen. Logically organized groups of information — chiller modes of operation, active diagnostics, settings and reports put information conveniently at your fingertips. See Operator Interface Section for details.

TechView™ Chiller Service Tool
— For the service technician or advanced operator
All chiller status, machine configuration settings, customizable limits, and up to 60 active or historic diagnostics are displayed through the service tool interface. Without changing any hardware, we give you access to the latest and greatest version of Tracer CH530! A new level of serviceability using the innovative TechView™ chiller service tool, a technician can interact with an individual device or a group of devices for advanced troubleshooting. LED lights and their respective TechView™ indicators visually confirm the viability of each device. Any PC that meets the system requirements may download the service interface software and Tracer CH530 updates. For more information on TechView™ visit your local Trane Service company, or The Trane Company's website at www.trane.com.

Figure 7. CVHE, CVHF, and CVHG sequence of operation overview

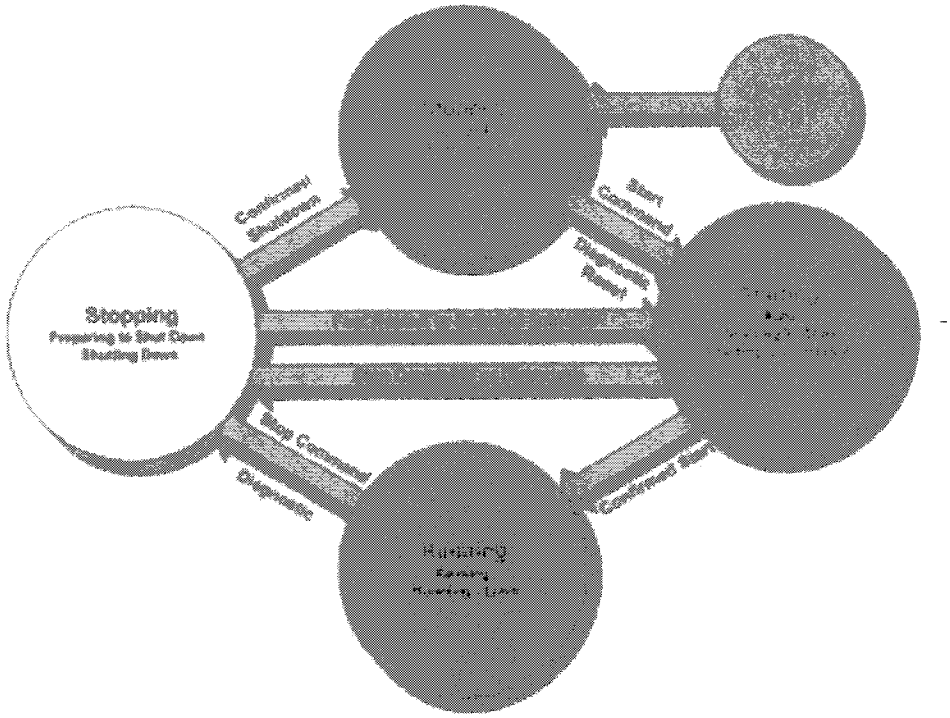

General Information

Figure 8. CVHE, CVHF, and CVHG sequence of operation: power up to starting

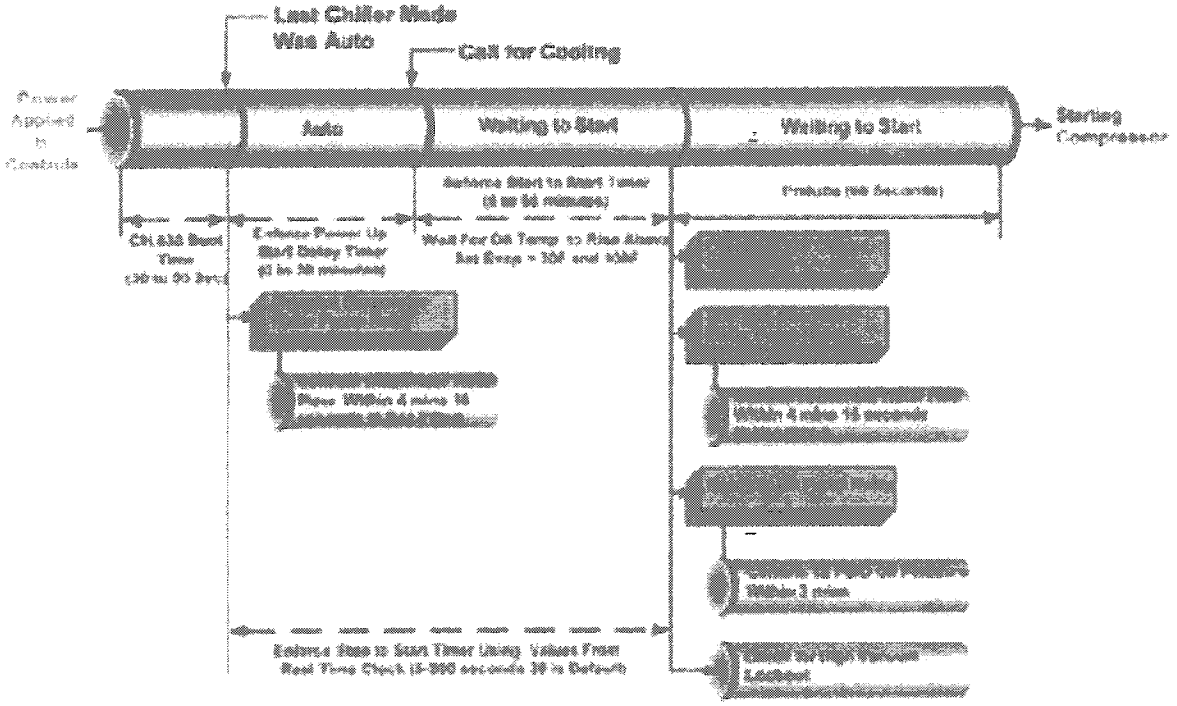

Figure 9. CVHE, CVHF, and CVHG sequence of operation: running

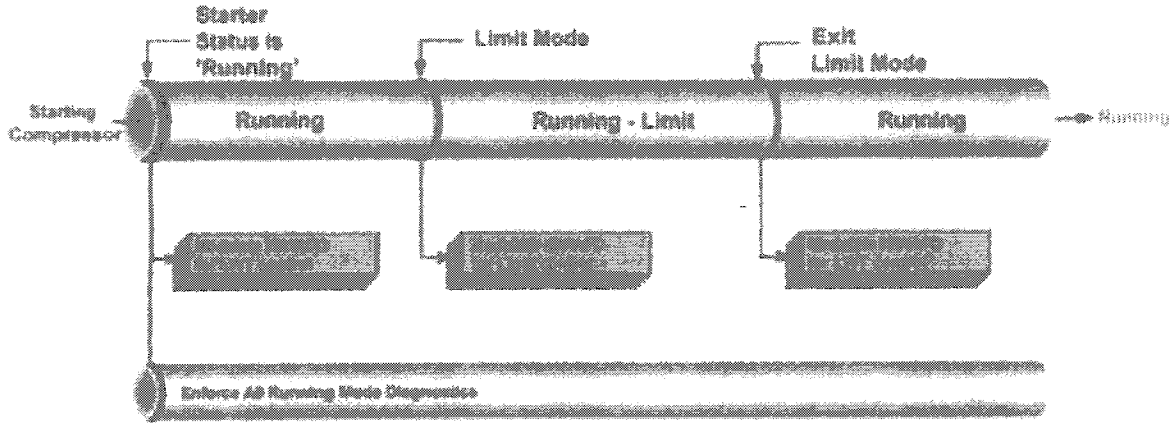

General Information

Figure 10. CVHE, CVHF, and CVHG sequence of operation: satisfied setpoint

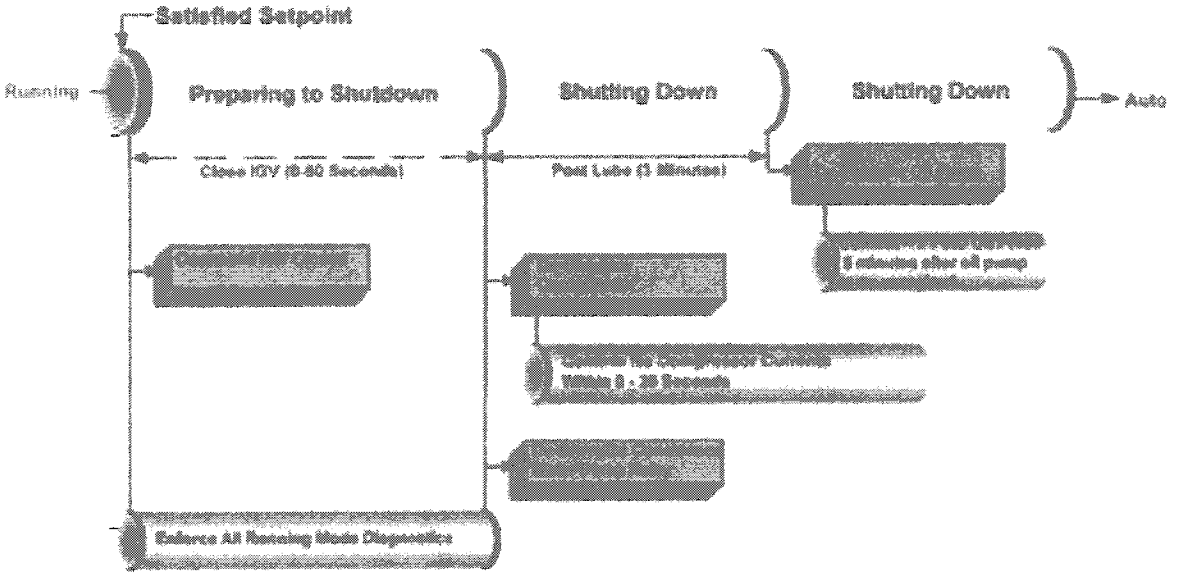

Figure 11. CVHE, CVHF and CVHG sequence of operation: normal shutdown to stopped and run inhibit

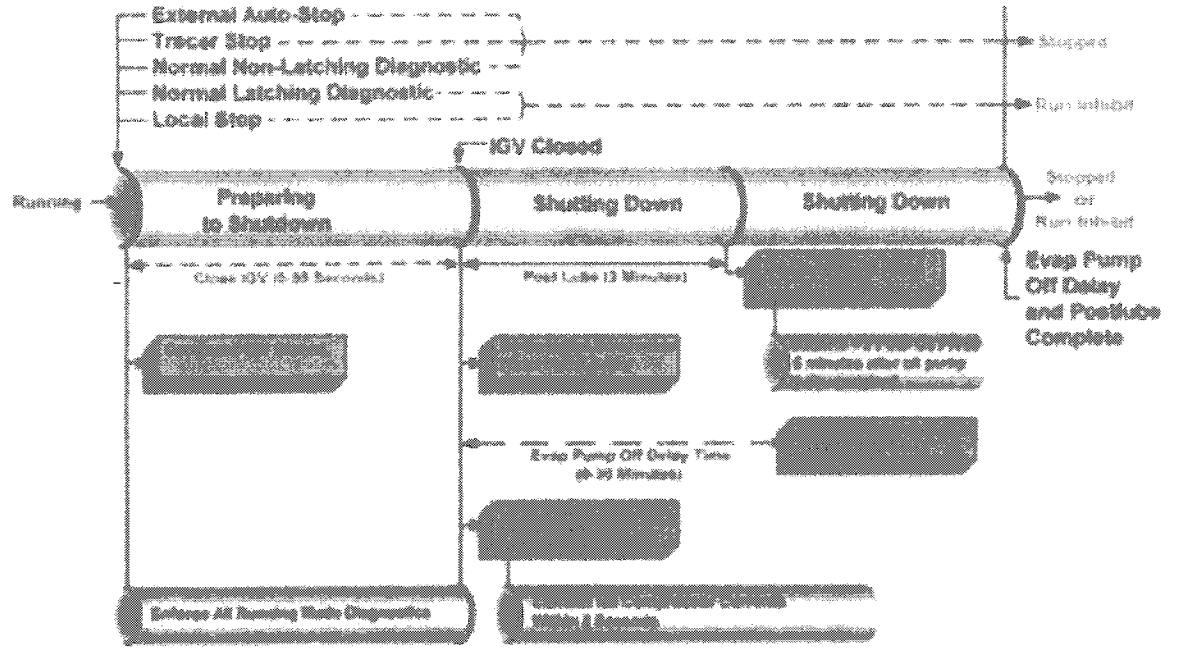

General Information

Oil and Refrigeration Pump

Compressor Lubrication System - A schematic diagram of the compressor lubrication system is illustrated in Figure 12.

Oil is pumped from the oil tank (by a pump and motor located within the tank) through an oil pressure-regulating valve designed to maintain a net oil pressure of 18 to 22 psid. It is then filtered and sent to the oil cooler located in the economizer and on to the bearings. From the bearings, the oil drains back to the manifold under the motor and then on to the oil tank.

CAUTION

Surface Temperatures!

MAY EXCEED 150°F. Use caution while working on certain areas of the unit, failure to do so may result in minor or moderate injury.

To ensure proper lubrication and prevent refrigerant from condensing in the oil tank, a 750-watt heater is immersed in the oil tank and is used to warm the oil while the unit is off. When the unit starts, the oil heater is de-energized. This heater energizes as needed to maintain 140° to 145° F (60-63°C) when the chiller is not running.

When the chiller is operating, the temperature of the oil tank is typically 115° to 160°F (46-72°C). The oil return lines from the thrust and journal bearings, transport oil and some seal leakage refrigerant. The oil return lines are routed into a manifold under the motor. Gas flow exits the top of the manifold and is vented to the Evaporator. A vent line solenoid is not needed with the refrigerant pump. Oil exits the bottom of the manifold and returns to the tank. Separation of the seal leakage gas in the manifold keeps this gas out of the tank.

A dual eductor system is used to reclaim oil from the suction cover and the evaporator, and deposit it back into the oil tank. These eductors use high pressure condenser gas to draw the oil from the suction cover and evaporator to the eductors and then discharged into the oil tank. The evaporator eductor line has a shut off valve mounted by the evaporator and ships closed. Open two turns if necessary.

Liquid refrigerant is used to cool the oil supply to both the thrust bearing and journal bearings. On refrigerant pump units the oil cooler is located inside the economizer and uses refrigerant passing from the condenser to evaporator to cool the oil. Oil leaves the oil cooler and flows to both the thrust and journal bearings.

Motor Cooling System
Compressor motors are cooled with liquid refrigerant, see Figure 12.

The refrigerant pump is located on the front of the oil tank (motor inside the oil tank). The refrigerant pump inlet is connected to the well at the bottom of the condenser. The connection is on the side where a weir assures a preferential supply of liquid. Refrigerant is delivered to the motor via the pump. Motor refrigerant drain lines are routed to the condenser.

General Information

Figure 12. Oil refrigerant pump

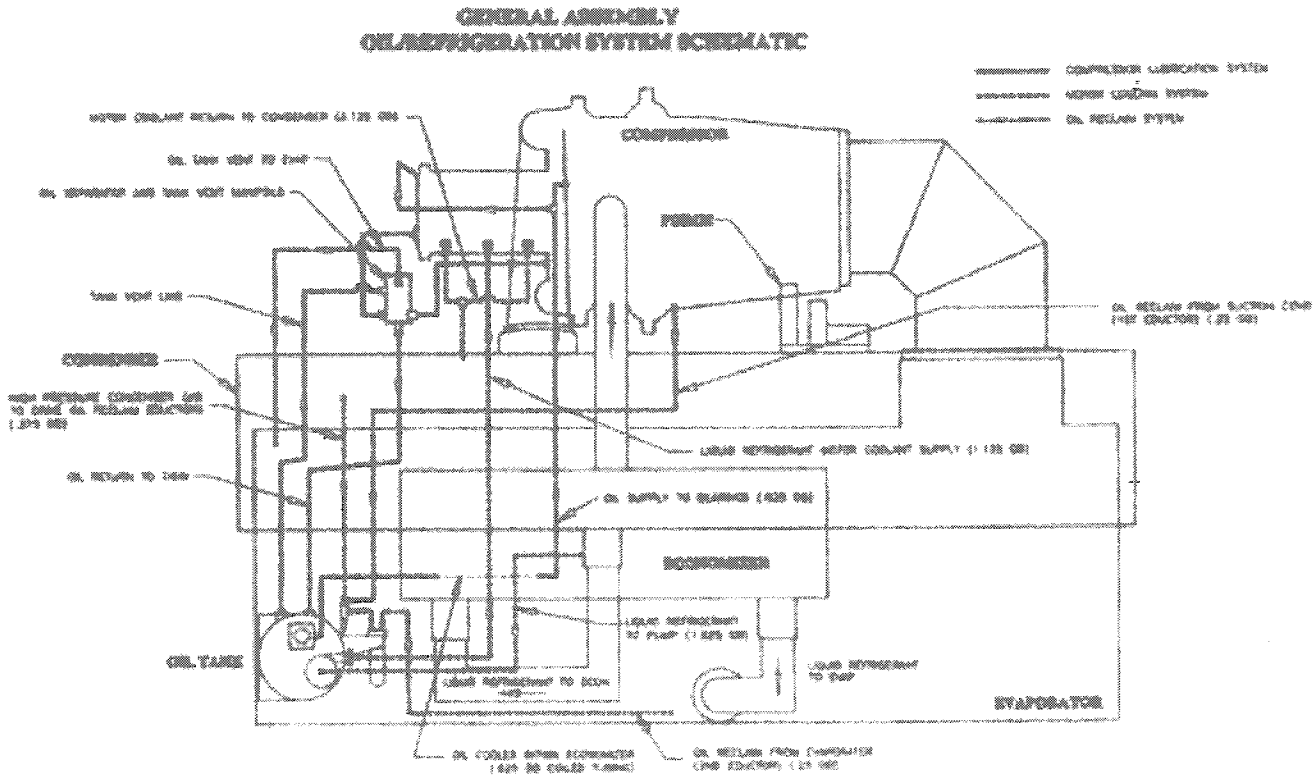

General Information

Base Loading Control Algorithm:

This feature allows an external controller to directly modulate the capacity of the chiller. It is typically used in applications where virtually infinite sources of evaporator load and condenser capacity are available and it is desirable to control the loading of the chiller. Two examples are industrial process applications and cogeneration plants. **Industrial process applications** might use this feature to impose a specific load on the facility's elecrical system. **Cogeneration plants** might use this feature to balance the system's heating, cooling and electrical generation.

All chiller safeties and adaptive control functions are in full effect when Base Loading control is enabled. If the chiller approaches full current, the evaporator temperature drops too low, or the condenser pressure rises too high, Tracer CH530 Adaptive Control logic limits the loading of the chiller to prevent the chiller from shutting down on a safety limit. These limits may prevent the chiller from reaching the load requested by the Base Loading signal.

Base Loading Control is basically a variation of the current limit algorithm. During base loading, the leaving water control algorithm provides a load command every 5 seconds. The current limit routine may limit the loading when the current is below setpoint. When the current is within the deadband of the setpoint the current limit algorithm holds against this loading command. If the current exceeds the setpoint, the current limit algorithm unloads. The "Capacity Limited By High Current" message normally displayed while the current limit routine is active is suppressed while base loading.

Base loading can occur via Tracer, External signal, or front panel.

Tracer Base Loading:
Current Setpoint Range:
(20 - 100) percent RLA
Requires Tracer and Optional Tracer Communications Module (LLID)

The Tracer commands the chiller to enter the base load mode by sending the base load mode request. If the chiller is not running, it will start regardless of the differential to start (either chilled water or hot water). If the chiller is already running, it will continue to run regardless of the differential to stop (either chilled water or hot water), using the base load control algorithm. While the unit is running in base loading, it will report that status back to the Tracer by setting "Base Load Status = true" in the Tracer Status Byte. When the Tracer removes the base load mode request (sets the bit to 0). The unit will continue to run, using the normal chilled or hot water control algorithm, and will turn off, only when the differential to stop has been satisfied.

External Base Loading:
Current Setpoint Range:
(20 - 100) percent RLA

The UCP accepts 2 inputs to work with external base loading. The binary input is at 1A18 Terminals J2-1 and J2-2 (Ground) which acts as a switch closure input to enter the base-loading mode. The second input, an analog input, is at 1A17 terminals J2 – 1 and 3 (Ground) which sets the external base loading setpoint, and can be controlled by either a 2-10Vdc or 4-20ma Signal. At startup the input type is configured. The graphs in Figure 13 show the relationship between input and percent RLA. While in base loading the active current limit setpoint is set to the Tracer or external base load setpoint, providing that the base load setpoint is not equal to 0 (or out of range). If it is out of range, the front panel current limit setpoint is used. During base loading, all limits are enforced with the exception of current limit. The human interface displays the message "Unit is Running Base Loaded". Hot Gas Bypass is not run during base loading. If base loading and ice making are commanded simultaneously, ice making takes precedence.

An alternative and less radical approach to Base Loading indirectly controls chiller capacity. Artifically load the chiller by setting the chilled water setpoint lower than it is capable of achieving. Then, modify the chiller's load by adjusting the current limit setpoint. This method provides greater safety and control stability in the operation of the chiller because it has the advantage of leaving the chilled water temperature control logic in effect. The chilled water temperature control logic responds quicker to dramatic system changes, and can limit the chiller loading prior to reaching an Adaptive Control limit point.

General Information

Figure 13. Base loading with external mA input and with external voltage input

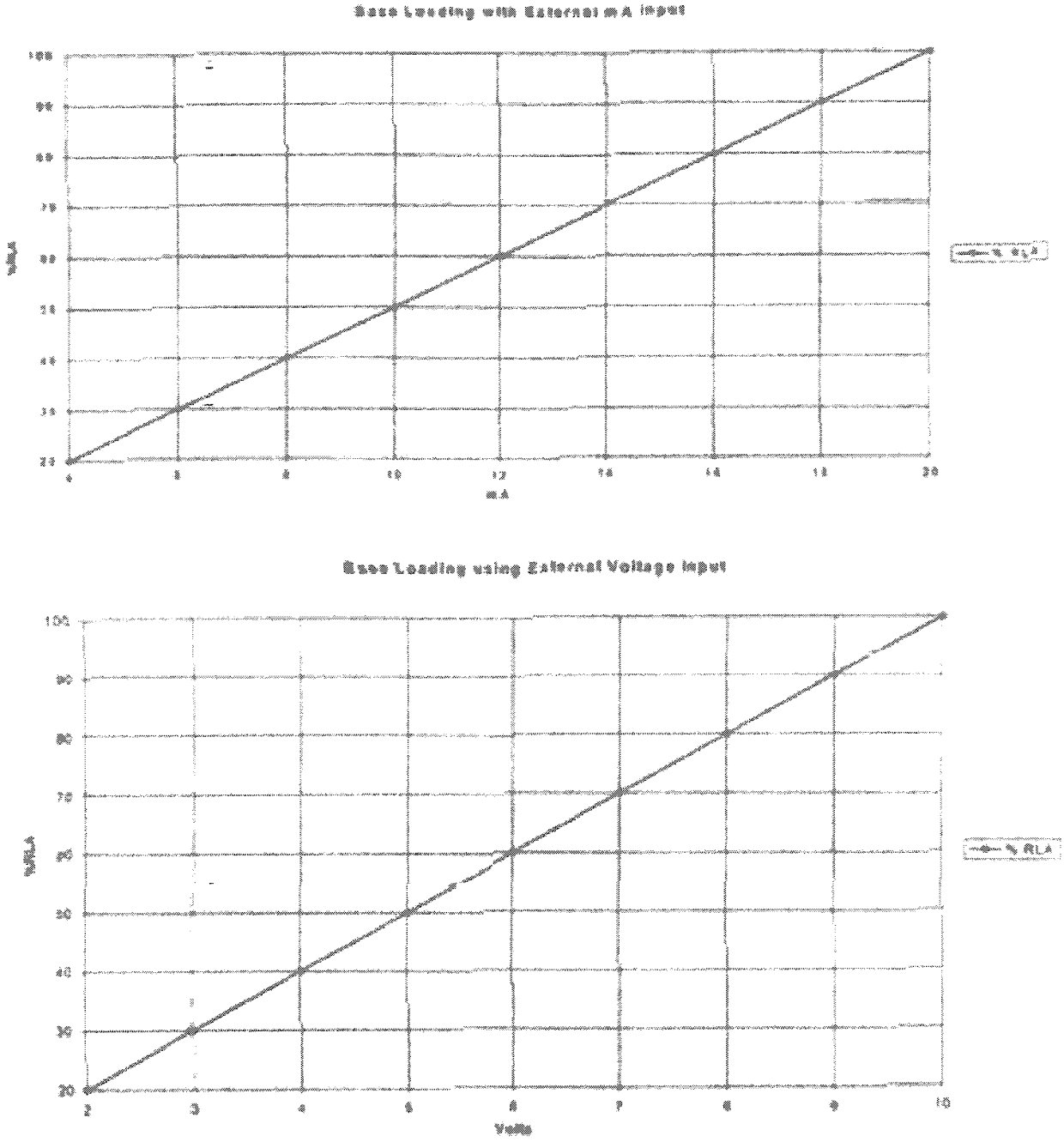

General Information

Ice Machine Control

The control panel provides a service level "Enable or Disable" menu entry for the Ice Building feature when the Ice Building option is installed. Ice Building can be entered 1) from the "Front Panel", 2) if hardware is specified, will accept either an isolated contact closure (1A19 Terminals J2-1 and J2-2 (Ground)) 3), a remote communicated input (Tracer) to initiate the ice building mode where the unit runs fully loaded at all times. Ice building will be terminated either by opening the contact or based on entering evaporator fluid temperature. UCP will not permit the Ice Building mode to be entered again until the unit is switched to the Non-ice building mode and back into the ice building mode. It is not acceptable to reset the chilled water setpoint low to achieve a fully loaded compressor. When entering ice-building the compressor will be loaded at its maximum rate and when leaving ice building the compressor will be unloaded at its maximum rate. While loading and unloading the compressor, all surge detection will be ignored. While in the ice building mode, current limit setpoints less than the maximum will be ignored. Ice Building can be terminated by one of the following means:

1. Front Panel Disable, or
2. Opening the external Ice. Contacts/ Remote communicated input (Tracer), or
3. Satisfying an evaporator entering fluid temperature setpoint (Default to 27°F).
4. Surging for 7 minutes at full open IGV.

Figure 14. CVHE, CVHF and CVHG sequence of operation: ice making: running to ice making

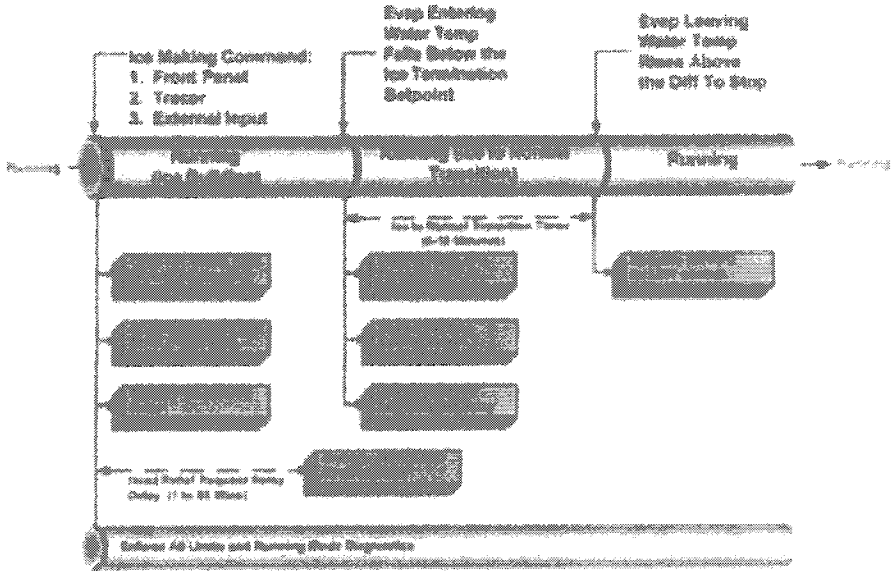

Figure 15. CVHE, CVHF and CVHG sequence of operation: ice making: stopped to ice to ice building complete

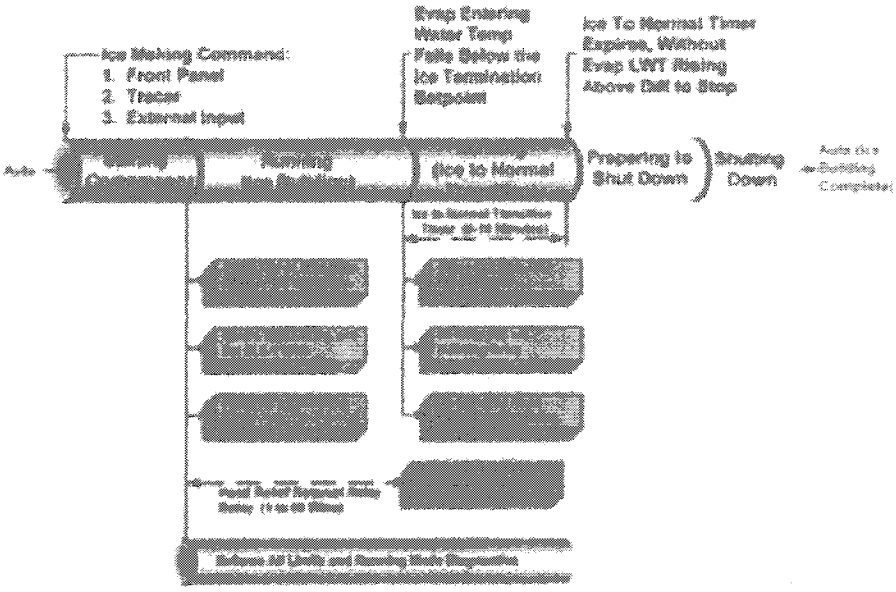

General Information

Free Cooling Cycle

Based on the principle that refrigerant migrates to the coldest area in the system, the free cooling option adapts the basic chiller to function as a simple heat exchanger. However, it does not provide control of the leaving chilled water temperature.

If condenser water is available at a temperature lower than the required leaving chilled water temperature, the operator interface must remain in "AUTO" and the operator starts the free cooling cycle by enabling the Free cooling mode in the "DynaView™ Feature Settings" group of the operator interface, or by means of a Tracer request.

Several components must be factory-installed or field-installed to equip the unit for free cooling operation:

- a refrigerant gas line, and electrically-actuated shutoff valve, between the evaporator and condenser;
- a valve liquid return line, and electrically-actuated shutoff valve, between the condenser sump and the evaporator;
- a liquid refrigerant storage vessel (larger economizer); and,
- additional refrigerant.

When the chiller is changed over to the free cooling mode, the compressor will shut down if running, the shutoff valves in the liquid and gas lines open; unit control logic prevents the compressor from energizing during free cooling. Liquid refrigerant then drains (by gravity) from the storage tank into the evaporator and floods the tube bundle. Since the temperature and pressure of the refrigerant in the evaporator are higher than in the condenser (i.e., because of the difference in water temperature), the refrigerant in the evaporator vaporizes and travels to the condenser. Cooling tower water causes the refrigerant to condense, and it flows (again, by gravity) back to the evaporator.

This compulsory refrigerant cycle is sustained as long as a temperature differential exists between condenser and evaporator water. The actual cooling capacity provided by the free cooling cycle is determined by the difference between these temperatures which, in turn, determines the rate of refrigerant flow between the evaporator and condenser shells.

If the system load exceeds the available free cooling capacity, the operator must manually initiate changeover to the mechanical cooling mode by disabling the free cooling mode of operation. The gas and liquid line valves then close and compressor operation begins. (See Figure 8 beginning at "Auto" mode.) Refrigerant gas is drawn out of the evaporator by the compressor, where

General Information

it is then compressed and discharged to the condenser. Most of the condensed refrigerant initially follows the path of least resistance by flowing into the storage tank. This tank is vented to the economizer sump through a small bleed line; when the storage tank is full, liquid refrigerant must flow through the bleed line restriction. Because the pressure drop through the bleed line is greater than that of the orifice flow control device, the liquid refrigerant flows normally from the condenser through the orifice system and into the economizer.

Free Cooling FRCL

To enable Free Cooling Mode:

1. Free Cooling must first be installed and commissioned.
2. Enable the Free Cooling mode in the DynaView™ Settings Menu
3. Press "AUTO", and if used, close the external binary input switch (connected to 1A20 J2- 1 to 2) while the chiller is in "AUTO".

Free Cooling cannot be entered if the chiller is in "STOP".

If the chiller is in "AUTO" and not running, the condenser water pump will start. After condenser water flow is proven, Relay Module 1A11 will energize operating the Free Cooling Valves 4B12 and 4B13. The Free Cooling Valves End Switches must open within 3 minutes, or an MMR diagnostic will be generated. Once the Free Cooling Valves End Switches open, the unit is in the Free Cooling mode. If the chiller is in "AUTO" and running powered cooling, the chiller will do a friendly shut down first, (Run: Unload, Post Lube, and drive vanes closed). After the vanes have been overdriven, closed and condenser water proven, the Free Cooling relays will be energized. To disable Free Cooling and return to Powered Cooling, either disable the Free Cooling Mode in the DynaView™ settings menu if used to enable Free Cooling or "OPEN" the external binary input switch to the 1A20 Module if it was used to enable Free Cooling. Once Free Cooling is disabled, the Free Cooling relays Relay Module 1A11 will de-energize allowing the Free Cooling valves to close. The Free Cooling valves end switches must close within 3 minutes or an MMR diagnostic is generated. Once the end switches close the chiller will return to "AUTO" and powered cooling will resume if there is a call for cooling based on the differential to start.

Note: The manual control of the inlet guide vanes is disabled while in the Free Cooling Mode and the compressor is prevented from starting by the control logic.

Note: The relay at 1A11-J-2-4 to 6 is a FC auxiliary relay and can be used as required.

General Information

Hot Gas Bypass

The hot gas bypass (HGBP) control option is designed to minimize machine cycling by allowing the chiller to operate stably under minimum load conditions. In these situations, the inlet guide vanes are "locked" at a preset minimum position, and unit capacity is governed by the HGBP valve actuator. Control circuitry is designed to allow both the inlet guide vanes and the HGBP valve to close for unit shutdown.

After a chiller starts and is running the inlet guide vanes will pass through the HGBP Cut-In-Vane position as the chiller starts to load. As the chiller catches the load and starts to unload, the inlet guide vanes will close to the HGBP Cut-In Vane position. At this point the movement of the inlet guide vanes is frozen and further unloading of the chiller is controlled by the opening of the HGBP Valve 4M5 and module modulates the HGBP valve at low loads. When the control algorithm determines the chiller to be shut down, the inlet guide vanes will be driven fully closed, and the HGBP valve will be driven closed. After the inlet guide vanes are fully closed the chiller will shut down in the Friendly mode. Chillers with HGBP have a discharge temperature sensor (4R16) monitoring the discharge gas temperature from the compressor. If this temperature exceeds 200°F, the chiller will shut off on a MAR diagnostic. The chiller will reset automatically when this temperature drops 50°F below the trip-point.

HGBP is enabled in the Features menu settings Group of the DV Menus by enabling the option. The setting the HGBP Cut-In Vane Position is setup at unit commissioning via the service tool.

General Information

Hot Water control

Occasionally CTV chillers are selected to provide heating as a primary mission. With hot water temperature control, the chiller can be used as a heating source or cooling source. This feature provides greater application flexibility. In this case the operator selects a hot water temperature and the chiller capacity is modulated to maintain the hot water setpoint. Heating is the primary mission and cooling is a waste product or is a secondary mission. This type of operation requires an endless source of evaporator load (heat), such as well or lake water. The chiller has only one condenser.

Note: Hot water temperature control mode does not convert the chiller to a heat pump. Heat pump refers to the capability to change from a cooling-driven application to a heating-driven application by changing the refrigerant path on the chiller. This is impractical for centrifugal chillers as it would be much easier to switch over the water side.

This is NOT heat recovery. Although this feature could be used to recover heat in some form, there is a second heat exchanger on the condenser side.

The DynaView™ Main Processor provides the hot water temperature control mode as standard. The leaving condenser water temperature is controlled to a hot water setpoint between 80 and 140°F (26.7 to 60°C) The leaving evaporator water temperature is left to drift to satisfy the heating load of the condenser. In this application the evaporator is normally piped into a lake, well, or other source of constant temperature water for the purpose of extracting heat.

In hot water temperature control mode all the limit modes and diagnostics operate as in normal cooling with one exception; The leaving condenser water temperature sensor is an MMR diagnostic when in hot water temperature control mode. (It is an informational warning in the normal cooling mode.)

In the hot water temperature control mode the differential-to-start and differential-to-stop setpoints are used with respect to the hot water setpoint instead of with the chilled water setpoint.

UCP provides a separate entry at the DV to set the hot water setpoint. Tracer is also able to set the hot water setpoint. In the hot water mode the external chilled water setpoint is the external hot water setpoint; that is, a single analog input is shared at the 1A16–J2-1 to J2-3 (ground)

An external binary input to select external hot water control mode is on the EXOP OPTIONAL module 1A18 terminals J2-3 to J2-4 (ground). Tracer also has a binary input to select chilled water control or hot water temperature control.

There is no additional leaving hot water temperature cutout; the HPC and condenser limit provide for high temperature and pressure protection.

In hot water temperature control the softloading pulldown rate limit operates as a softloading pullup rate limit. The setpoint for setting the temperature rate limit is the same setpoint for normal cooling as it is for hot water temperature control.

The hot water temperature control feature is not designed to run with HGBP, AFD, free cooling, or ice making.

The factory set PID tuning values for the leaving water temperature control are the same settings for both normal cooling and hot water temperature control.

General Information

Heat Recovery Cycle

"Heat recovery" is designed to salvage the heat that is normally rejected to the atmosphere through the cooling tower, and put it to beneficial use. For example, a high-rise office building may require simultaneous heating and cooling during the winter months. With the addition of a heat recovery cycle, heat removed from the building cooling load can be transferred to areas of the building that require heat. (Keep in mind that the heat recovery cycle is only possible if a cooling load exists to act as a heat source.)

To provide a heat recovery cycle, a heat-recovery condenser is added to the unit; see Figure 2. Though physically identical to the standard cooling condenser, the heat-recovery condenser is piped into a heat circuit rather than to the cooling tower. During the heat recovery cycle, the unit operates just as it does in the "cooling only" mode except that the cooling load heat is rejected to the heating water circuit rather than to the cooling tower water circuit. When hot water is required, the heating water circuit pumps energize. Water circulated through the heat-recovery (or auxiliary) condenser tube bundle by the pumps absorbs cooling-load from the compressed refrigerant gas discharge by the compressor. The heated water is then used to satisfy heating requirements.

Auxiliary Condensers

Unlike the heat-recovery condenser (which is designed to satisfy comfort heating requirements), the auxiliary condenser serves a preheat function only, and is used in those applications where hot water is needed for use in kitchens, lavatories, etc. While the operation of the auxiliary condenser is physically identical to that of the heat-recovery condenser, it is comparatively smaller in size, and its heating capacity is not controlled.

Trane does not recommend operating the auxiliary condenser alone because of its small size.

Unit Control Panel (UCP)

Control Panel Devices and Unit Mounted Devices

Unit Control Panel (UCP)
Safety and operating controls are housed in the unit control panel, the starter panel and the purge control panel. The UCP 's operator interface and main processor is called the DynaView™ (DV) and is located on the UCP door. (See Operators interface section for detailed information)

The UCP houses several other controls modules called panel mounted LLID (Low Level Intelligent Device), power supply, terminal block, fuse, circuit breakers, and transformer. The IPC (Interprocessor communication) bus allows the communications between LLID's and the main processor. Unit mounted devices are called frame mounted LLID's and can be temperature sensors or pressure transducers. These and other functional switches provide analog and binary inputs to the control system.

Figure 16. Control panel and approximate dimensions

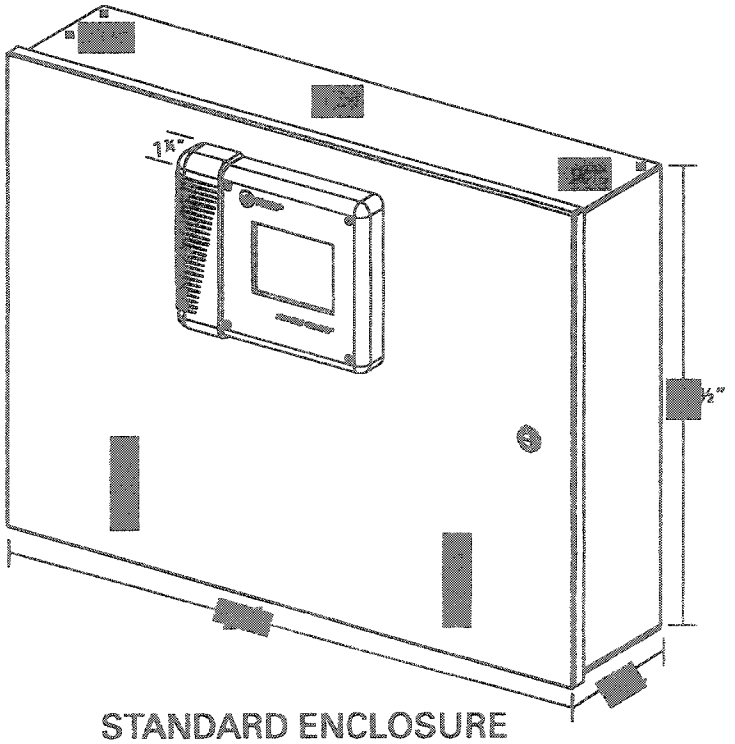

STANDARD ENCLOSURE

Unit Control Panel (UCP)

Tracer CH530 Chiller Controller
Revolutionary control of the chiller, chilled water system, and your entire building with unprecedented accuracy, reliability, efficiency, and support for maintenance using the chiller's PC-based service tool. Chiller reliability is all about producing chilled water and keeping it flowing, even when facing conditions that ordinarily would shut down the chiller — conditions that often happen when you need cooling the most.

Tracer CH530's Main Processor, DynaView™, is fast and keeps the chiller online whenever possible. Smart sensors collect three rounds of data per second, 55 times the data collection speed of its predecessor. Each device (a sensor) has its own microprocessor that simultaneously converts and accurately calibrates its own readings from analog to digital.

Because all devices are communicating digitally with the DynaView™ main processor, there is no need for the main processor to convert each analog signal one at a time. This distributed logic allows the main processor to focus on responding to changing conditions — in the load, the machine, its ancillary equipment, or its power supply. Tracer CH530 constantly receives information about key data parameters, temperatures and current. Every five seconds then a multiple objective algorithm compares each parameter to its programmed limit. The chiller's Adaptive Control™ capabilities maintain overall system performance by keeping its peak efficiency. Whenever the controller senses a situation that might trigger a protective shutdown, it focuses on bringing the critical parameter back into control. When the parameter is no longer critical, the controller switches its objective back to controlling the chilled water temperature, or to another more critical parameter should it exist.

Variable water flow through the evaporator
Chilled-water systems that vary water flow through chiller evaporators have caught the attention of engineers, contractors, building owners, and operators. Varying the water flow reduces the energy consumed by pumps, while requiring no extra energy for the chiller. This strategy can be a significant source of energy savings, depending on the application. With its faster and more intelligent response to changing conditions, Tracer CH530 reliably accommodates variable evaporator water flow and its effect on the chilled water temperature. These improvements keep chilled water flowing at a temperature closer to its setpoint.

User-defined language support
DynaView™ is capable of displaying English text or one of the two alternate languages that are stored in DynaView™ at one time. Switching languages is simply accomplished from a settings menu.

Similarly, TechView™ accommodates a primary and a secondary language from the same list of available languages.

Operator Interface

Figure 17. DynaView™ main processor

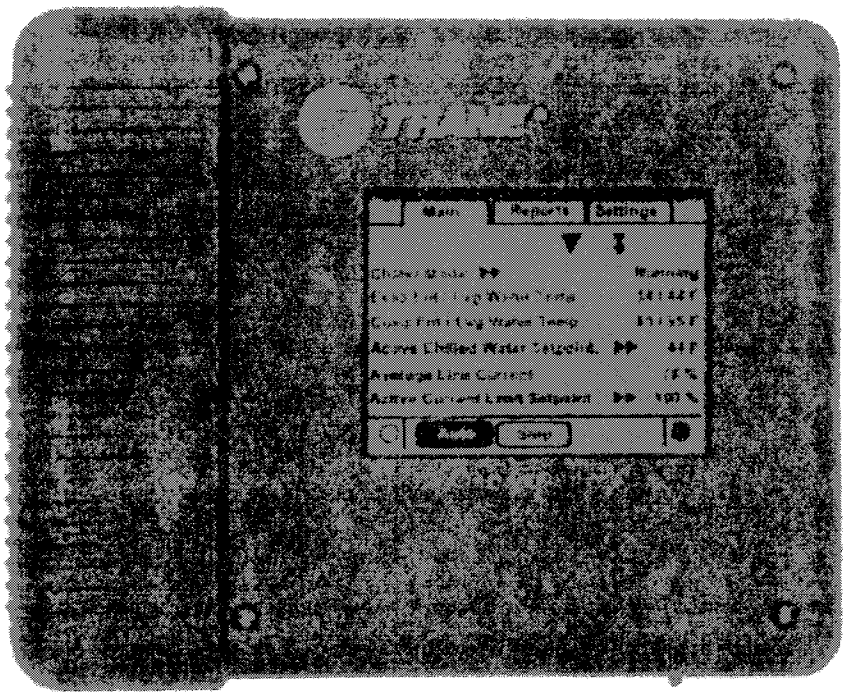

The DynaView™ (DV) Operator Interface contains the "Main Processor (MP)" and is mounted on the unit control panel front door where it communicates commands to other modules, collecting data, status and diagnostic information from the other modules over the IPC (Inter Processor Communications) link. The Main Processor (MP) software controls water flows by starting pumps and sensing flow inputs, establishes a need to heat or cool, performs pre-lube, performing post-lube, starts the compressor(s), performs water temperature control, establishes limits, and pre-positions the inlet guide-vanes.

The MP contains non-volatile memory both checking for valid set points and retaining them on any power loss. System data from modules (LLID) can be viewed at the DynaView™ operator interface. Such as evaporator and condenser water temperatures, outdoor air temperature, evaporator and condenser water pump control, status and alarm relays, external auto-stop, emergency stop, evaporator and condenser water pressure drops and evaporator and condenser water flow switches.

DynaView™ presents three menu tabs across the top which are labeled "MAIN, REPORTS, and SETTINGS".

The **Main screen** provides an overall high level chiller status so the operator can quickly understand the mode of operation of the chiller.

The Chiller Operating Mode will present a top level indication of the chiller mode (Auto, Running, Inhibit, Run Inhibit, etc.) The "additional info" icon will present a subscreen that lists in further detail the subsystem modes. (See Machine Operating Modes.)

Main screen content can be viewed by selecting the up or down arrow icons. The Main screen is the default screen and after an idle time of 30 minutes.

Operator Interface

DynaView™ (DV) is the **operator interface** of the Tracer CH530 control system utilized on the CTV machine. The DynaView™ enclosure is 9.75" wide, 8" high and 1.6" deep. The DynaView™ display is approximately 4" wide by 3" high. Features of the display include a touch screen and long life LED backlight. This device is capable of operating in 0 - 95 percent relative humidity (non-condensing), and is designed and tested with UV considerations consistent with an outdoor application in direct sunlight. The enclosure includes a weather tight connection means for the RS232 service tool connection.

Touch screen key functions are determined completely in the software and change depending upon the subject matter currently being displayed. The user operates the touch sensitive buttons by touching the button of choice. The selected button is darkened to indicate it is the selected choice. The advantage of touch sensitive buttons is that the full range of possible choices as well as the current choice is always in view.

Spin values (up or down) are a graphical user interface model used to allow a continuously variable setpoint, such as leaving water setpoint to be changed. The value changes by touching the increment or decrement arrows.

Action buttons are buttons that appear temporarily and provide the operator with a choice such as **Enter** or **Cancel**. The operator indicates his choice by touching the button of choice. The system then takes the appropriate action and the button typically disappears.

DynaView™ consists of various screens, each meant to serve a unique purpose of the machine being served. **Tabs** are shown row across the top of the display. The user selects a screen of information by touching the appropriate tab. The folder that is selected will be brought to the front so it's contents are visable

The main body of the screen is used for description text, data, setpoints, or **keys** (touch sensitive areas) The **double up arrows** cause a page by page scroll either up or down. The **single arrow** causes a line by line scroll to occur. At the end of the screen, the appropriate scroll buttons will disappear. Wrap around will not occur.

The bottom of the screen is the persistent area. It is present in all screens and performs the following functions. The **left circular area** is used to reduce the contrast and viewing angle of the display. The **right circular area** is used to increase the contrast and viewing angle of the display. The contrast control will be limited to avoid complete "light" or complete "dark", which would potentially confuse an unfamiliar user to thinking the display was malfunctioning.

Operator Interface

The **Auto** and **Stop** keys are used to put the unit into the auto or stop modes. Key selection is indicated by being darkened (reverse video).

The **Alarms** button is to the right of the **Stop** key. The **Alarms** button appears only when alarm information is present. The alarm blinks to draw attention to the shutdown diagnostic condition. Blinking is defined as normal versus reverse video. Pressing on the **Alarms** button takes you to the corresponding screen.

Persistent keys, horizontal at the bottom of the display, are those keys that must be available for operation regardless of the screen currently being displayed. These keys are critical for machine operation. The **Auto and Stop** keys will be presented as radio buttons within the persistent key display area. The selected key will be dark. The chiller will stop when the **Stop** key is touched, entering the stop sequence. Pressing the "Immediate Stop" button will cause the chiller to stop right away.

The AUTO and STOP, take precedence over the ENTER and CANCEL keys. (While a setting is being changed, AUTO and STOP keys are recognized even if ENTER or CANCEL has not been pressed. Selecting the Auto key will enable the chiller for active cooling (if no diagnostic is present.)

Chiller Stop Prevention/Inhibit Feature
A new chiller "Stop prevention/ inhibit" feature allows a user to prevent an inadvertent chiller stop from the DynaView screen for those chillers which are solely controlled by the CH530.

How It Works
This new feature will be activated after the service tech sets a variable shut down timer in TechView to be greater that 0 seconds and up to 20 seconds (i.e. 0 < Timer ± 20). Then, when the user presses the 'STOP' button on the DynaView display and initiates a chiller shutdown, a window will now appear that displays the "Unit Stop Information Screen" as shown below.

TechView service tool is utilized to enable this feature.

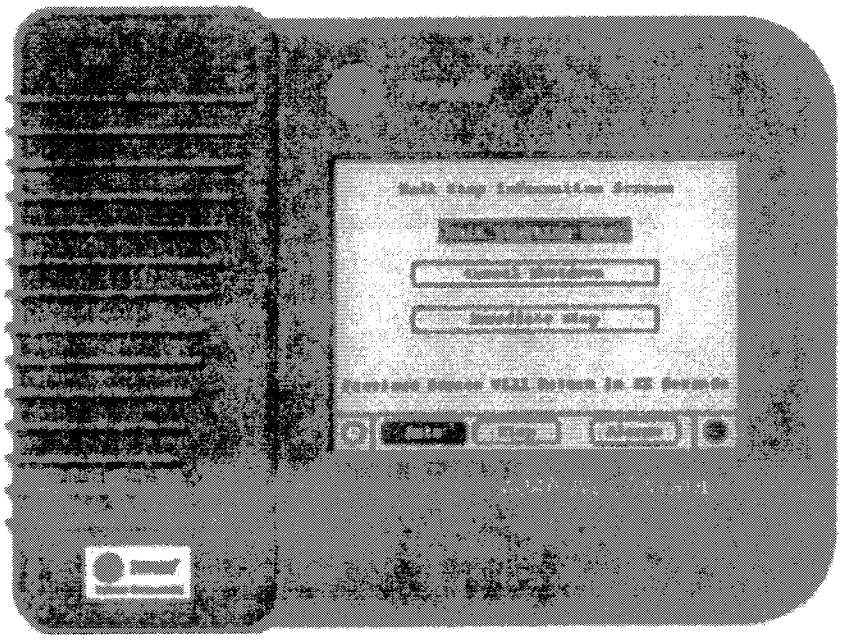

Operator Interface

Figure 18

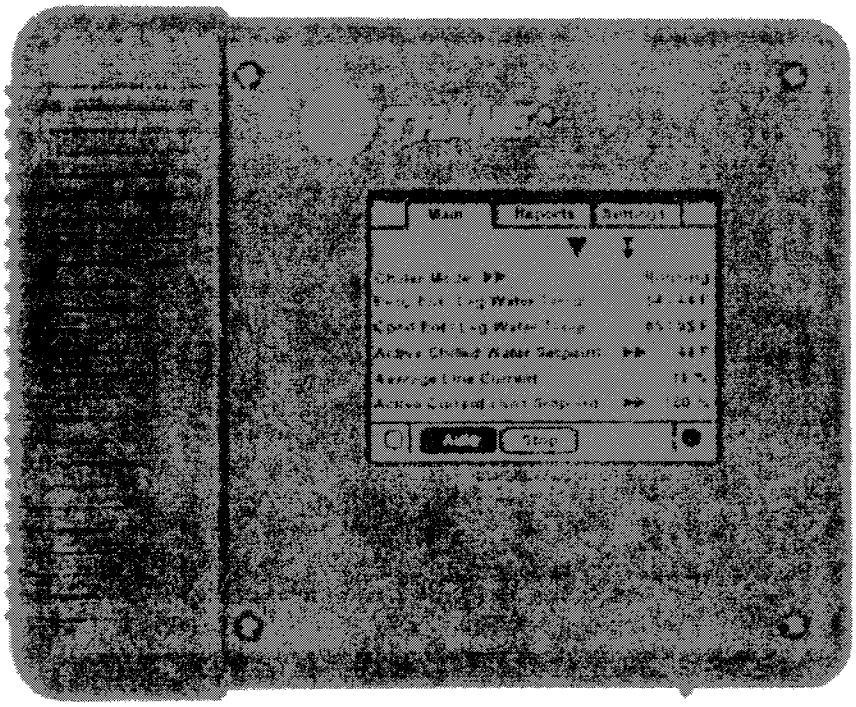

A general description of the top level modes is show in the following table.

Top Level Mode	Description
Stopped	Unit inhibited from running and will require user action to go to Auto.
Run Inhibit	Unit inhibited from running by Tracer, External BAS, or an Auto Reset diagnostic.
Auto	Unit determining if there is a need to run.
Waiting To Start	Unit waiting for tasks required prior to compressor start to be completed.
Starting Compressor	Unit is starting compressor.
Running	Compressor is running with no limits in effect.
Running – Limit	Compressor is running with limit in effect.
Preparing To Shutdown	Unit is closing inlet guide vanes prior to compressor shutdown.
Shutting Down	Compressor has been stopped and unit is performing shutdown tasks.
Free Cooling	Unit is in Free Cooling mode and will not run the compressor.

The **machine-operating mode** indicates the operational status of the chiller. A subscreen with additional mode summary information will be provided. When the user scrolls down the screen the Machine Operation Mode will remain stationary

On DynaView™, the user will be presented with a single line of text that represents the 'top-level' operating state of the machine. These top-level modes are shown in the table below. Additional information (if it exists) regarding the machine operating state will be available to the user by selecting the "additional information" button (double right arrow) next to the top-level operating mode. These sub-level modes are shown in the table at left.

The TOP LEVEL MODE is the text seen on the single top level chiller system operating mode line. The SUB LEVEL MODE is the text seen on the operating mode sub-menu. The operating mode sub-menu may have up to six (6) lines of text displayed. The BAS CODE is the code that will be sent via COMM4 to the Tracer Summit system as the chiller system mode. Note that each top level mode may contain multiple sub level modes. In general, the BAS CODE will reflect the top level mode and not the sub level mode.

Operator Interface

Figure 19

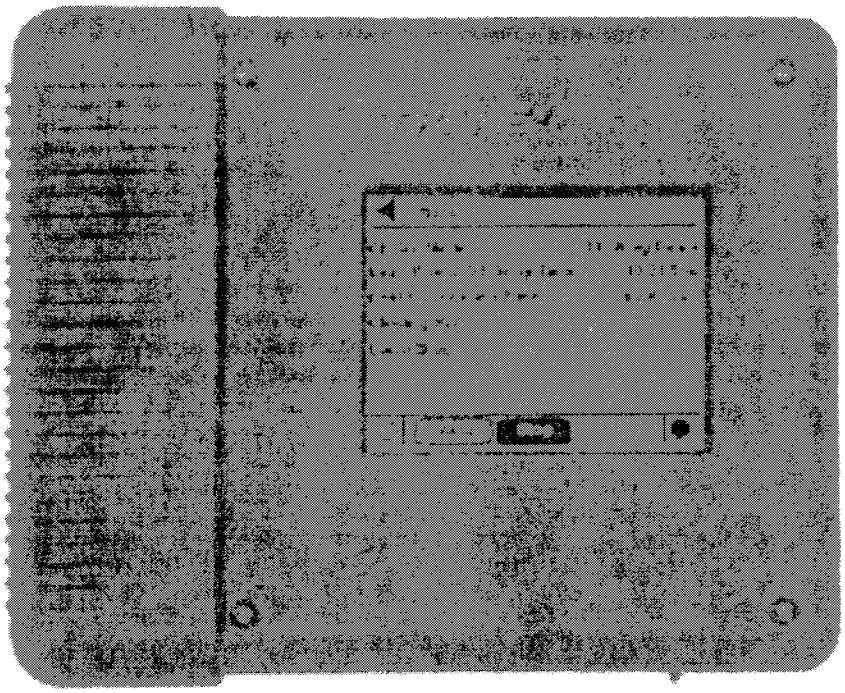

Top Level Mode	Sub Level Mode	Reference BAS Code
SYSTEM RESET	Boot & Application software part number, self-test, and configuration validity screens will be present.	NA
Stopped	Local Stop	00
Stopped	Panic Stop	00
Stopped	Diagnostic Shutdown – Manual Reset	00
Run Inhibit	Ice Building Is Complete	100
Run Inhibit	Tracer Inhibit	100
Run Inhibit	External Source Inhibit	100
Run Inhibit	Diagnostic Shutdown – Auto Reset	100
Auto	Waiting For Evaporator Water Flow	58
Auto	Waiting For A Need To Cool	58
Auto	Waiting For A Need To Heat	58
Auto	Power Up Delay Inhibit: MIN:SEC	58
Waiting To Start	Waiting For Condenser Water Flow	70
Waiting To Start	Establishing Oil Pressure	70
Waiting To Start	Pre-Lubrication Time: MIN:SEC	70

Operator Interface

Top Level Mode	Sub Level Mode		Reference BAS Code
Waiting To Start	Motor Temperature Inhibit: Motor Temperature / Inhibit Temperature		70
Waiting To Start	Restart Time Inhibit: MIN:SEC		70
Waiting To Start	High Vacuum Inhibit: Oil Sump Press / Inhibit Press		70
Waiting To Start	Low Oil Temperature Inhibit: Oil Temperature / Inhibit Temperature		70
Waiting To Start	Waiting For Starter To Start: MIN:SEC		70
Starting Compressor	There is no sub mode displayed		72
Running	There is no sub mode displayed		74
Running	Hot Water Control		74
Running	Surge		74
Running	Base Loaded		74
Running	Hot Gas Bypass		74
Running	Ice Building		74
Running	Ice To Normal Transition		74
Running	Current Control Soft Loading		74
Running	Capacity Control Soft Loading		74
Running – Limit	Current Limit		75
Running – Limit	Phase Unbalance Limit		75
Running – Limit	Condenser Pressure Limit		75
Running – Limit	Evaporator Temperature Limit		75
Running – Limit	Minimum Capacity Limit		75
Running – Limit	Maximum Capacity Limit		75
Free Cooling			09
Free Cooling	Opening Free Cooling Valves		09
Free Cooling	Closing Free Cooling Valves		09
Preparing To Shutdown	Closing IGV:	IGV Position %	7E
Shutting Down	Post-Lubrication Time:	MIN:SEC	7E
Shutting Down	Evaporator Pump Off Delay:	MIN:SEC	7E
Shutting Down	Condenser Pump Off Delay:	MIN:SEC	7E

Operator Interface

Main Screen

The main screen is provides "an overall view" of the chiller performance in addition to the main and sub operating modes. The table below indicates other items found , when specified by options, that can be scrolled to via the up or down arrows.

Description
Chiller Operating Mode (>>sub modes)
Evaporator Entering and Leaving Water Temperature
Condenser Entering and Leaving Water Temperature
Active Chilled Water Setpoint (>>source)
Active Hot Water Setpoint (>>source)
Active Current Limit Setpoint (>>source), If enabled
Active Base Loading Setpoint (>>source), If enabled
Purge Operating Mode
Purge Status
Average Line Current
Approximate Chiller Capacity, If option installed
Active Ice Termination Setpoint (>>source), If option installed
Software Version

Operator Interface

Diagnostic Screen

The **diagnostic screen** is accessible by touching the **Alarms** enunciator.

When an alarm is present, the alarm enunciator is present next to the Stop key. A flashing "alarm" indicates a machine shutdown and a non flashing "alarm" indicates an informational message.

Machine shutdowns can be of two types:

Latching - Machine Shutdown Manual Reset Required (MMR)

or

Non-Latching - Machine Shutdown Auto Reset (MAR)

Latching (MMR) require corrective action and manual reset.

Non-Latching (MAR) will restart automatically when condition corrects itself.

There are over 200 potential messages, too numerous to incorporate in this manual.

Up to ten active diagnostics can be displayed if required.

The reason for all diagnostic must be determined and corrected. Do not reset and restart the chiller as this can cause a repeat failure. Contact local Trane Service for assistance as necessary.

After corrective action, the chiller can be reset and/or restarted. In the case of "Unit Shutdown - Reset Required" diagnostic types, the chiller will have to be manually reset through the Diagnostics alarm menu.

When reset they become historic and viewable via the service tool TechView.

Performing a **Reset All Active Diagnostics** will reset all active diagnostics regardless of type, machine or refrigerant circuit.

A **Manual Override** indicator (shares space with the Alarms key) alerts the operator to the presence of a manual override. An Alarm will take precedence of the Manual, until the reset of active alarms, at which point the Manual indicator would reappear if such an override exists.

Temperature settings can be expressed in F or C, depending on Display Units settings.

Dashes ("----") appearing in a temperature or pressure report, indicates that the value is invalid or not applicable.

The **languages** for DynaView™ will reside in the main processor. The main processor will hold three languages, English, and two alternate languages. The service tool (TechView™) will load the main processor with user selected languages from a list of available translations. Whenever possible, complete words will be used on the persistent keys as described.

Operator Interface

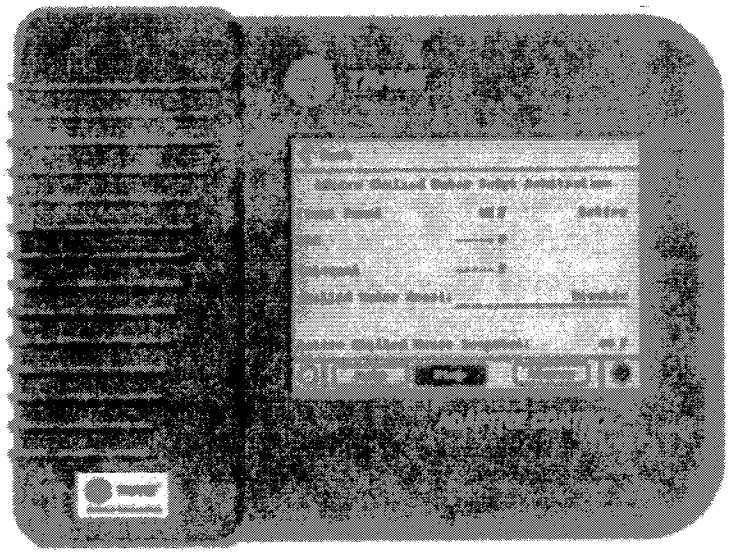

The **active chilled water setpoint** is the setpoint that is currently in use. It will be displayed to 0.1 degrees Fahrenheit or Celsius. Touching the **double arrow** to the left of the Active Chilled Water Setpoint will take the user to the active chilled water setpoint arbitration sub-screen.

The Active Chilled Water Setpoint the result of arbitration between the front panel, BAS, and external setpoints,

The **chilled water reset status** area in the right most column will display one of the following messages: Return, Constant Return, Outdoor, None

The left column text "Front Panel", "BAS", "External", Chilled Water Reset, and "Active Chilled Water Setpoint" will always be present regardless of installation or enabling those optional items. In the second column "- - - -" will be shown if that option is Not Installed, otherwise the current setpoint from that source will be shown.

The **"Back" button** provides navigation back to the chiller screen.

Operator Interface

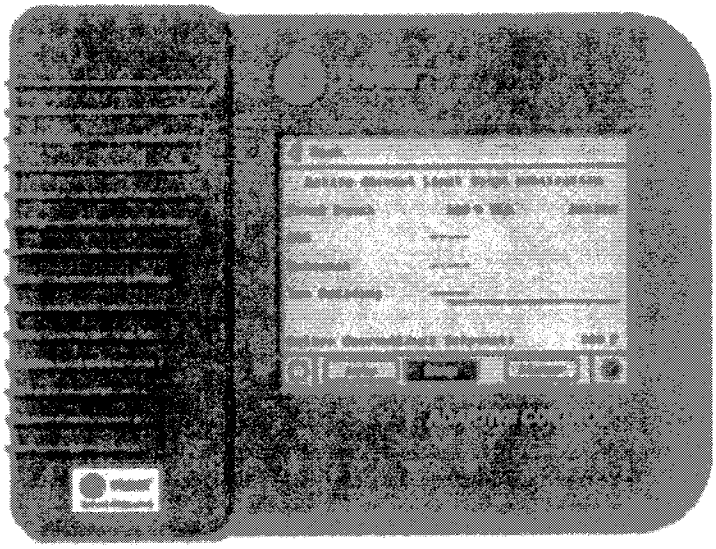

The **active current limit setpoint** is the current limit setpoint that is currently in use. It will be displayed in percent RLA. Touching the double arrow to the left of the Active Current Limit Setpoint will take the user to the active current limit setpoint sub-screen. The active current limit setpoint is that setpoint to which the unit is currently controlling. It is the result of arbitration between the front panel, BAS, and external setpoints.

The left column text "Front Panel", "BAS", "External", and "Active Current Limit Setpoint" will always be present regardless of installation or enabling those optional items. In the second column "----" will be shown if that option is Not Installed, otherwise the current setpoint from that source will be shown. The "Back" button provides navigation back to the chiller screen.

Note: This is the same for other setpoints in the "Main" menu.

Operator Interface

Reports

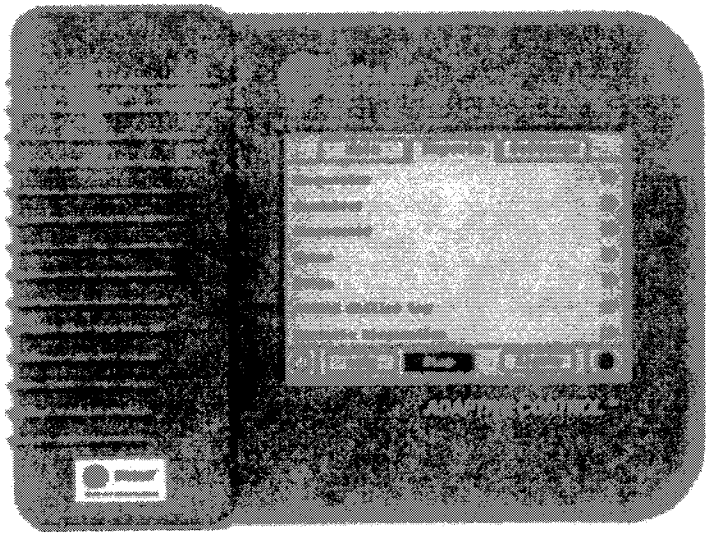

Evaporator Report items	Units
Evaporator Entering Water Temperature	°C or °F
Evaporator Leaving Water Temperature	°C or °F
Evaporator Saturated Refrigerant Temperature	°C or °F
Evaporator Refrigerant Pressure	Psia or kPa
Evaporator Approach	°C or °F
Evaporator Water Flow Switch Status	Flow or No Flow
Evaporator Differential Water Pressure, If installed	Psid
Approximately Evaporator Water Flow, If installed	Gpm or LPM
Approximate Chiller Capacity, If installed	Tons or kW

Condenser Report Items	Units
Condenser Entering Water Temperature	°C or °F
Condenser Leaving Water Temperature	°C or °F
Condenser Saturated Refrigerant Temperature	°C or °F
Evaporator Refrigerant Pressure Temperature	°C or °F
Condenser Refrigerant Pressure	Psia or kPa
Condenser Approach Temperature	°C or °F
Condenser Water Flow Switch Status	Open or closed
Condenser Differential Water Pressure, If installed	Psid or kPa
Approximate Condenser Water Flow, If installed	Gpm or LPM
Auxiliary Condenser or Heat Recovery Entering Water Temperature, If installed	°C or °F
Auxiliary Condenser or Recovery Leaving Water Temperature, If installed	°C or °F
Outdoor Air Temperature, If installed	°C or °F

Operator Interface

Compressor Report Items	Units
Compressor Starts:	####
Compressor Running Time:	Hour and minute
Compressor Discharge Temperature; If installed	°C or °F
Oil Tank Pressure	
Oil Discharge Pressure	
Oil Differential Pressure	
Oil Tank Temperature	°C or °F
Inboard Bearing Temperature, If installed	°C or °F
Outboard Bearing Temperature, If installed	°C or °F
Vanes Position	Percent open
Vanes Position Steps	Steps
Hot Gas Bypass Time, If installed	Hour and minute

Motor Report Items	Units
Percent RLA L1 L2 L3	Percent RLA
Amps L1 L2 L3	Amps
Volts AB, BC, CA	Vac
Power Consumption, If installed	xxx kW
Load Power Factory, If installed	xx
Winding Temperature A	°C or °F
Winding Temperature B	°C or °F
Winding Temperature C	°C or °F
Adaptive Frequency Drive Speed, If installed	Hz
Adaptive Frequence Drive Speed, If installed	RPM
Adaptive Frequency Drive Heat Sink Temperature, If installed	°C or °F

Purge Report Items	Units
Time Until Next Purge Run	
Daily Pumpout – 24 Hours	Minute
Average Daily Pumpout – 7 Days	Minute
Daily Pumpout Limit and Alarm	Minute
Chiller On – 7 Days	Percent
Pumpout Chiller On – 7 Days	Percent
Pumpout Chiller Off – 7 Days	Percent
Pumpout - Life	Minute
Purge Refrigerant Compressor Suction Temperature	°C or °F
Purge Liquid Temperature	°C or °F
Carbon Tank Temperature	°C or °F

Operator Interface

ASHRAE Chiller Log	Units
1. Current Time and Date Monitor	HH:MM xm
2. Operating Mode	
3. Active Chilled Water Setpoint:	°C or °F
4. Active Current Limit Setpoint:	% RLA
5. Refrigerant Type:	
6. Refrigerant Monitor: If installed	PPM
7. Purge Daily Pumpout – 24 Hours:	Minute
8. Purge Daily Pumpout Limit and Alarm	Minute
9. Purge Pumpout - Life	Minute
10. Purge Operating Mode:	Enum
11. Purge Status:	Enum
12. Compressor Starts:	
13. Compressor Running Time:	Hours:Minutes
14. Compressor Discharge Temperature; If option installed	°C or °F
15. Discharge Oil Pressure;	Psia or kPa
16. Oil Tank Pressure:	Psia or kPa
17. Differential Oil Pressure:	Psid or kPa
18. Oil Tank Temperature:	°C or °F
19. Inboard Bearing Temperature, If option installed	°C or °F
20. Outboard Bearing Temperature, If option installed	°C or °F
21. Evaporator Entering Water Temperature	°C or °F
22. Evaporator Leaving Water Temperature	°C or °F
23. Evaporator Saturated Refrigerant Temperature	°C or °F
24. Evaporator Refrigerant Press	Psia or kPa
25. Evaporator Approach	°C or °F
26. Evaporator Water Flow Switch Status:	Flow/No flow
27. Evaporator Differential Water Pressure, If installed	Psid or kPa
28. Approximately Evaporator Water Flow, If installed	GPM or LPM
29. Approximate Chiller Capacity, If installed	Tons or kW
30. Condenser Entering Water Temperature	°C or °F
31. Condenser Leaving Water Temperature	°C or °F
32. Saturated Condenser Refrigerant Temperature	°C or °F
33. Condenser Refrigerant Pressure	Psia or kPa
34. Condenser Approach	°C or °F
35. Condenser Water Flow Switch Status	Flow or No Flow
36. Condenser Differential Water Pressure	Psia or kPa
37. Approximate Condenser Water Flow, If installed	GPM or LPM
38. Second Condensor Entering Water Temperature, If installed	°C or °F
39. Second Condensor Leaving Water Temperature, If installed	°C or °F

Historic Diagnostics Log
1 to 20 Historic Diagnostics (main processor software 6.0 and later)

Operator Interface

Setting Tab screens provides a user the ability to adjust settings justified to support daily tasks. The layout provides a list of sub-menus, organized by typical subsystem.

Settings screen for standard CTV :

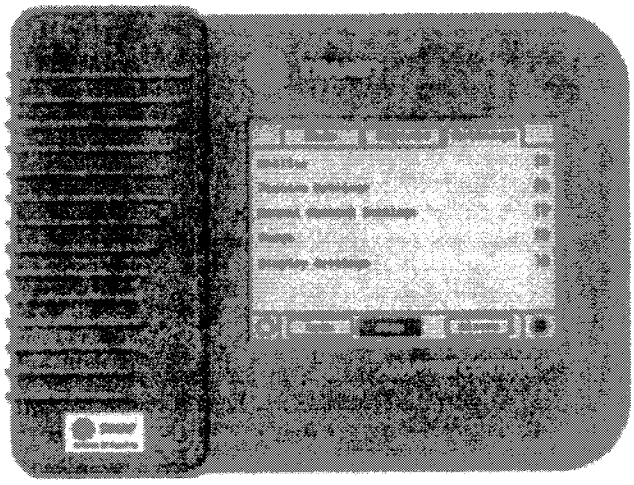

Chilled Water Setpoint:
To change chilled water setpoint first select the settings tab screen. Chilled water setpoint is within the chiller sub-menu. (See next page for setpoint listing.)

Operator Interface

Chiller

Description	Units	notes
1. Front Panel Control Type	(Chilled Water, Hot Water), Chilled Water default	
2. Front Panel Chilled Water Setpoint	Temperature	1
3. Front Panel Hot Water Setpoint	Temperature	1
4. Front Panel Current Limit Setpoint	Percent	2
5. Front Panel Base Load Command	On or Auto	
6. Front Panel Base Load Setpoint	Percent	
7. Front Panel Free Cool Command	On or Auto	
8. Front Panel Ice Building Command	On or Auto	
9. Front Panel Ice Termination Setpoint	Temperature	
10. Ice to Normal Cooling Timer	(0-10), 5 Minutes default	
11. Differential to Start	Temperature	
12. Differential to Stop	Temperature	
13. Setpoint Source	*(BAS/EXT/FP, EXT/FP, FP), none default	

*Follows hierarchy of selection from left to right (except ice build which is "OR" logic).

Feature Settings

Description	Units
1. Chilled Water Reset	(Constant, Outdoor, Return, Disable), Disable
2. Return Reset Ratio	Percent
3. Return Start Reset	Temperature
4. Return Maximum Reset	Temperature
5. Outdoor Reset Ratio	Percent
6. Outdoor Start Reset	Temperature
7. Outdoor Maximum Reset	Temperature
8. External Chilled Water Setpoint	(Enable, Disable), Disable
9. External Current Limit Setpoint	(Enable, Disable), Disable
10. Ice Building Feature Enable	(Enable, Disable), Disable
11. External Base Loading Setpoint	(Enable, Disable), Disable

Mode Overrides

Description	Units	Default	Monitor Value	Notes
1. Compressor Control Signal	(Auto, Manual [0-100]),	Auto	Percent Vane Position Evaporator Leaving Water Temperature, AFD Frequency, if installed	7
2. Evaporator Water Pump	(Auto, On),	Auto	1) Evaporator Flow status 2) Override Time Remaining	3
3. Condenser Water Pump	(Auto, On),	Auto	1) Condenser Flow status 2) Override Time Remaining	3
4. Oil Pump	(Auto, On),	Auto	1) Differential pressure 2) Override Time Remaining	3
5. Purge Exhaust Circuit Test	(Off, On),	Off		
6. Purge Regeneration Cycle	(Off, On),	Off	Carbon Temperature	

Operator Interface

Purge

Description	Units	Default
1. Purge Operating Mode	(Auto, On, Adaptive, Stop),	Adaptive
2. Daily Pumpout Limit	Minutes	
3. Disable Daily Pumpout Limit	Hours	
4. Purge Liquid Temperature Inhibit	(Enable, Disable),	Enable
5. Purge Liquid Temperature Limit	Temperature	

Display Settings

Description	Units	notes
1. Date Format	("mmm dd, yyy", "dd-mmm-yyyy"), "mmm dd, yyy"	
2. Date		4
3. Time Format	(12-hour, 24-hour), 12-hour	
4. Time of Day		4
5. Keypad and Display Lockout	(Enable, Disable), Disable	5
6. Display Units	(SI, English), English	
7. Language	(English, Selection 2, Selection 3), English	6

(1) Temperatures will be adjustable to 0.1 degree F or C. The Main Processor provides the minimum and maximum allowable value.
(2) Adjustable to the nearest whole number percent. The Main Processor provides the minimum and maximum allowable value.
(3) Terminates with 10 minutes if inactivity
(4) The Date and Time setup screen formats deviate slightly from the standard screens defined above. See the time and date section for further details.
(5) Enables a DynaView™ Lockout screen. All other screens timeout in 30 minutes to this screen when enabled. The DynaView™ Lockout Screen displays a 0-9 keypad to permit the user to exit the lockout with a fixed password (1-5-9 + Enter). See lockout setion for further details.
(6) Language choices are dependent on what has been setup in the Main Processor. Language selections will include English and qty 2 alternate as loaded by TechView™. Language shall always be the last setting listed on the Display Settings menu. This will allow a user to find language selection if looking at an unrecognizable language.
(7) Manual Compressor Control allows an operator to override the Auto Control and manually control the compressor while in operation. This is not active during Stop mode.

Operator Interface

Each Settings Sub screen consists of a setpoints list and the current value. The operator selects a setpoint to change by touching either the description or setpoint value. Doing this causes the screen to switch to the Analog Settings Subscreen shown below.

Analog Settings Subscreen displays the current value of the chosen setpoint in the upper ½ of the display. It is displayed in a changeable format consistent with its type. Binary setpoints are considered to be simple two state enumeration and will use buttons. Analog setpoints are displayed as spin buttons. The lower half of the screen is reserved for help screens. To change the setpoint the ENTER key must be touched, otherwise the new setting is cancelled.

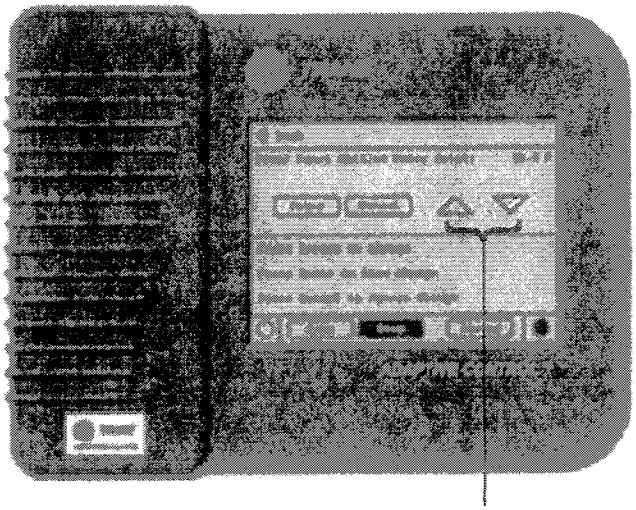

Note: Spin buttons used to change setpoint value.

Operator Interface

Settings with buttons only [screen has no cancel or enter key] do accept the new selection immediately.

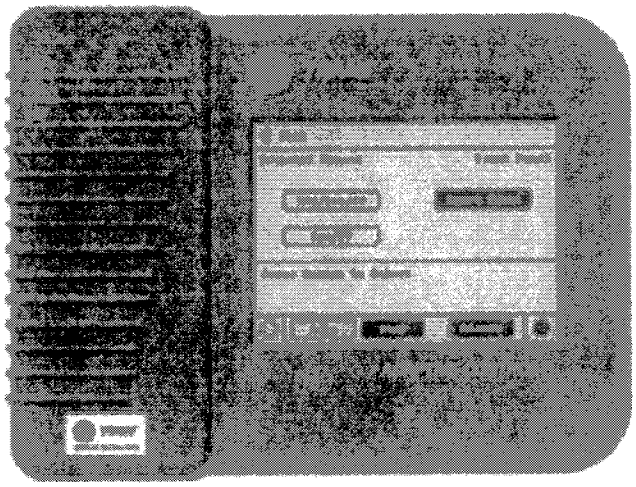

Note: Radio 1 and Radio 2 refer to "touch sensitive buttons." The labels depend upon the setting being controlled.

Mode Override for Enumerated Settings is shown below:

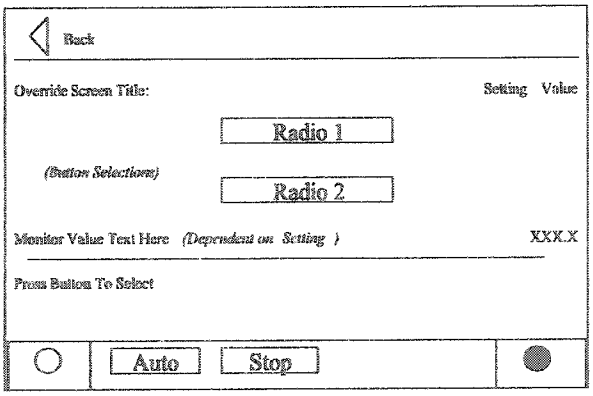

Operator Interface

The mode override analog setting subscreen is similar but offers an Auto or Manual radio button and value setting. An Auto or Manual selection is necessary set to the mode to override. An Enter and Cancel Key will allow the user to Enter or Cancel the entry.

Mode Override for Analog Settings is shown below:

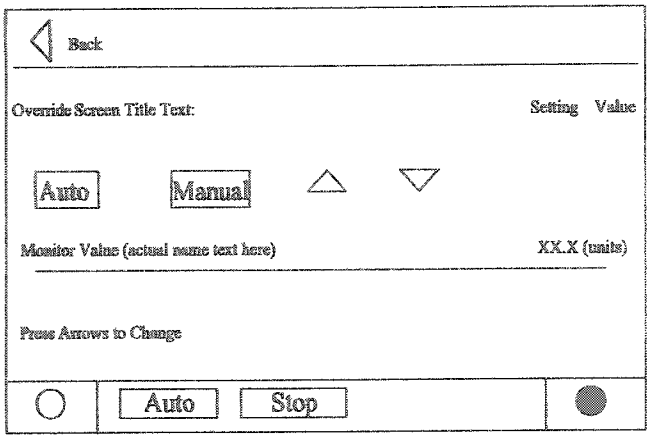

The date setpoint screen for setting up the is shown below: The user must select Day, Month, or Year and then use the up or down arrows to adjust.

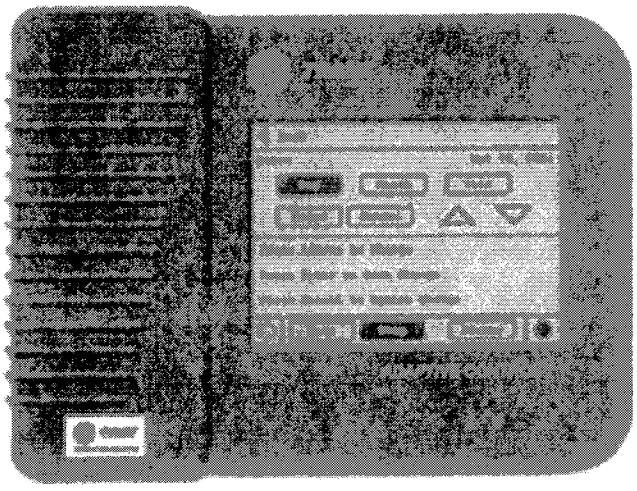

Operator Interface

The **time setpoint screen** with a 12-hour format is shown below: The user must select **Hour**, or **Minute** and then use the up or down arrows to adjust. Adjusting hours will also adjust am and pm.

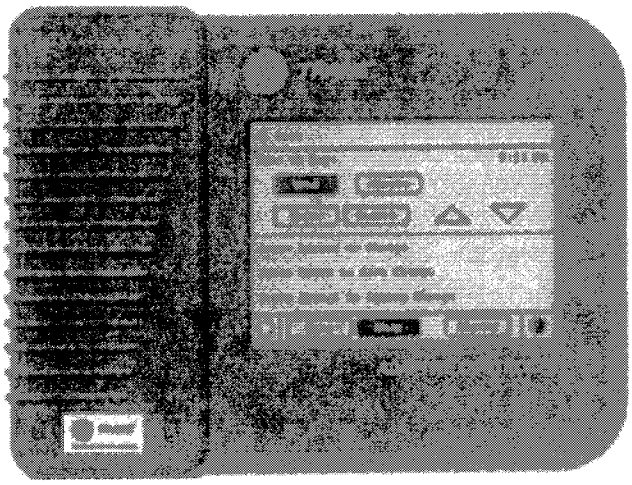

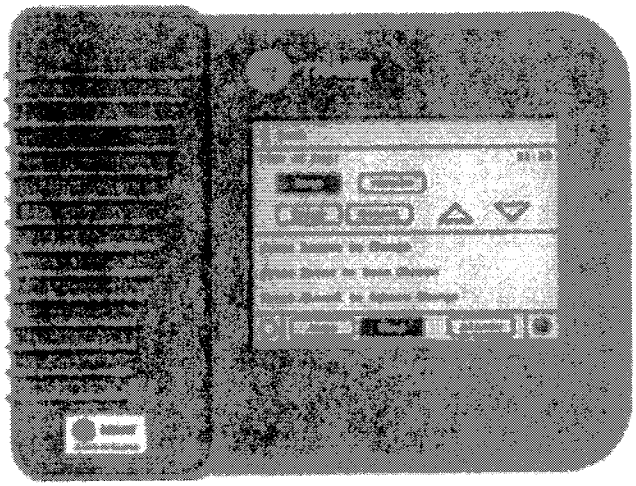

Note: The 24-hour format setpoint screen is similar with the am and pm not shown.

Operator Interface

The DynaView™ Display Touch Screen Lock screen is shown below. This screen is used if the Display and Touch Screen Lock feature is Enabled. 30 minutes after the last key stroke this screen will be displayed and the Display and Touch Screen will be locked out until "159enter" is entered.
Until the proper password is entered there will be no access to the DynaView™ screens including all reports, all setpoints, and Auto and Stop and Alarms and Interlocks. The password "159" is not programmable from either DynaView™ or TechView™.

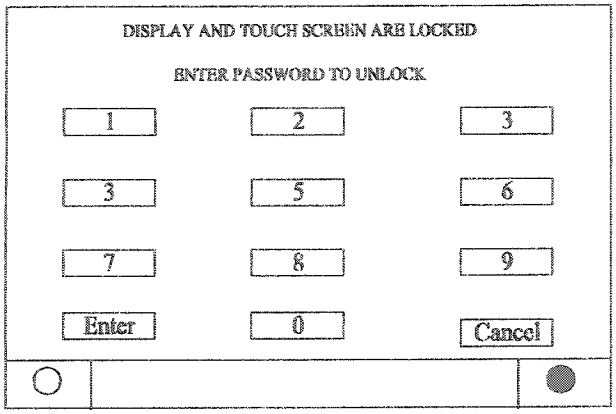

If the Display and Touch Screen Lock feature is Disabled, the following screen will be automatically shown if the MP temperature is below 32°F (0°C) and it has been 30 minutes after the last key stroke. *Note: the main processor is equipped with an on-board temperature sensor which enables the ice protection feature.*

Interprocessor Communication

Inter Processor Communications IPC3

When using Tracer CH530, you will not be required to know all the details about the structure of the IPC3 bus. However this page gives detailed information about the system for those of you that are really interested in how it works. The IPC3 protocol is based on RS485 signal technology. IPC3 was designed to be very efficient. It communicates at 19.2 Kbaud. This data rate will allow for three rounds of data per second on a 64 device network. A typical CVHE control network will have less than 50 devices. IPC3 allows for a maximum of 255 devices per network.

IPC3 Definitions:

Bus Management:
The DynaView™ provides the bus management having the task of restarting the link, or filling in for missing nodes when the normal communication has been degraded. This involves reassigning node addresses and filling in for nodes that are off-line. The DynaView™ always has a node number of 01.

Node Assignment:
When a unit is factory commissioned, the LLIDS must have their node addresses assigned to them for storage in non-volatile memory. The node addresses are normally assigned sequentially during factory commissioning.

Node Zero:
Node number zero is is a special node assignment that is reserved for devices that are service selected. A LLID communicating on node address zero will also communicate on an assigned node address. A LLID will only communicate on node address zero if it is service selected.

Binding:
Binding is the process of assigning a node number and functional IDs to a LLID. Binding is a simple process:

1. Service selecting the LLID with a magnet.
2. Assigning functional IDs to that LLID with TechView™.

Functional Identification:
When each LLID on the bus is bound, its inputs and outputs are given a functional ID. The Frame LLIDS have only one functional ID, but most Panel LLIDs have more than one functional ID. A dual high voltage binary input will have two functional IDs, a quad relay output has four functional IDs.

The DynaView™ Main Processor with its IPC3 Bus communicates to the control panel devices, unit mounted devices, and any remote devices on the IPC3 bus network. The various devices are discussed in the upcoming sections.

Control System Components

Control Panel Internally mounted devices

For visual identification Internal Control Panel mounted devices are identified by their respective schematic designation number. Control panel items are marked on the inner back panel in the control panel. Figure 20 illustrated below, identifies these devices. The Control Panel Devices table corresponds to the same device designators (see right hand column). Optional controls are present when a specific optional controls package is specified, as listed in the second column. Optional controls packages are; OPST Operating Status, GBAS Generic Building Systems, EXOP Extended operation, CDRP Condenser Pressure, TRMM Tracer communications, WPSR Water Flow Pressure sensing, FRCL Free Cooling, HGBP Hot Gas Bypass , and EPRO Enhanced Protection

Figure 20 illustrates the Control Panel Components Layout.

Modules 1A1, 1A3, 1A4, 1A5, 1A6, 1A7, and 1A13 are standard and present in all configurations. Other Modules vary depending on machine optional devices.

Figure 20. Control panel components layout and approximate dimensions

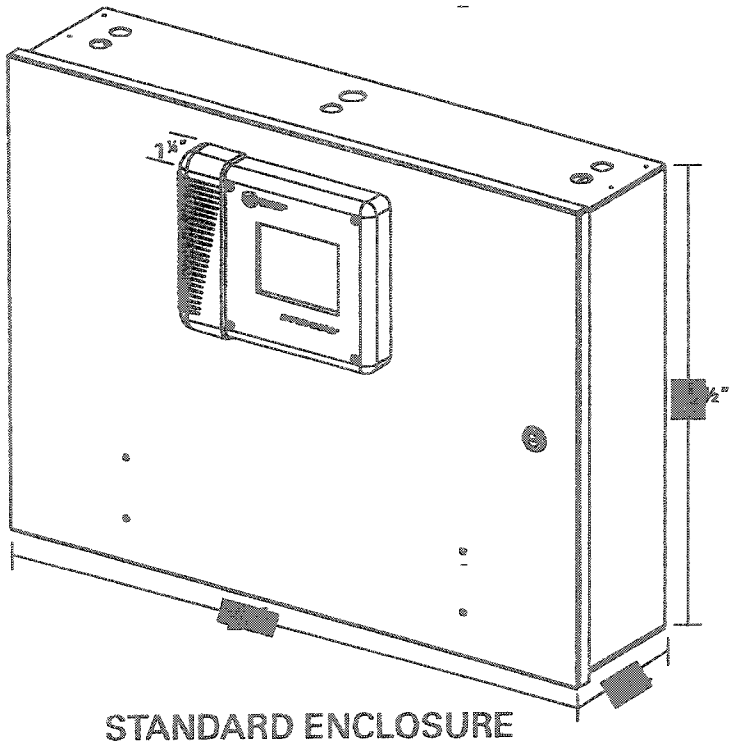

STANDARD ENCLOSURE

Control System Components

CH530 MAIN CONTROL PANEL ASSY
DEVICE DESIGNATIONS AND CIRCUIT DESCRIPTIONS
CVHE-CVHF-CVHG SIMPLEX UNITS

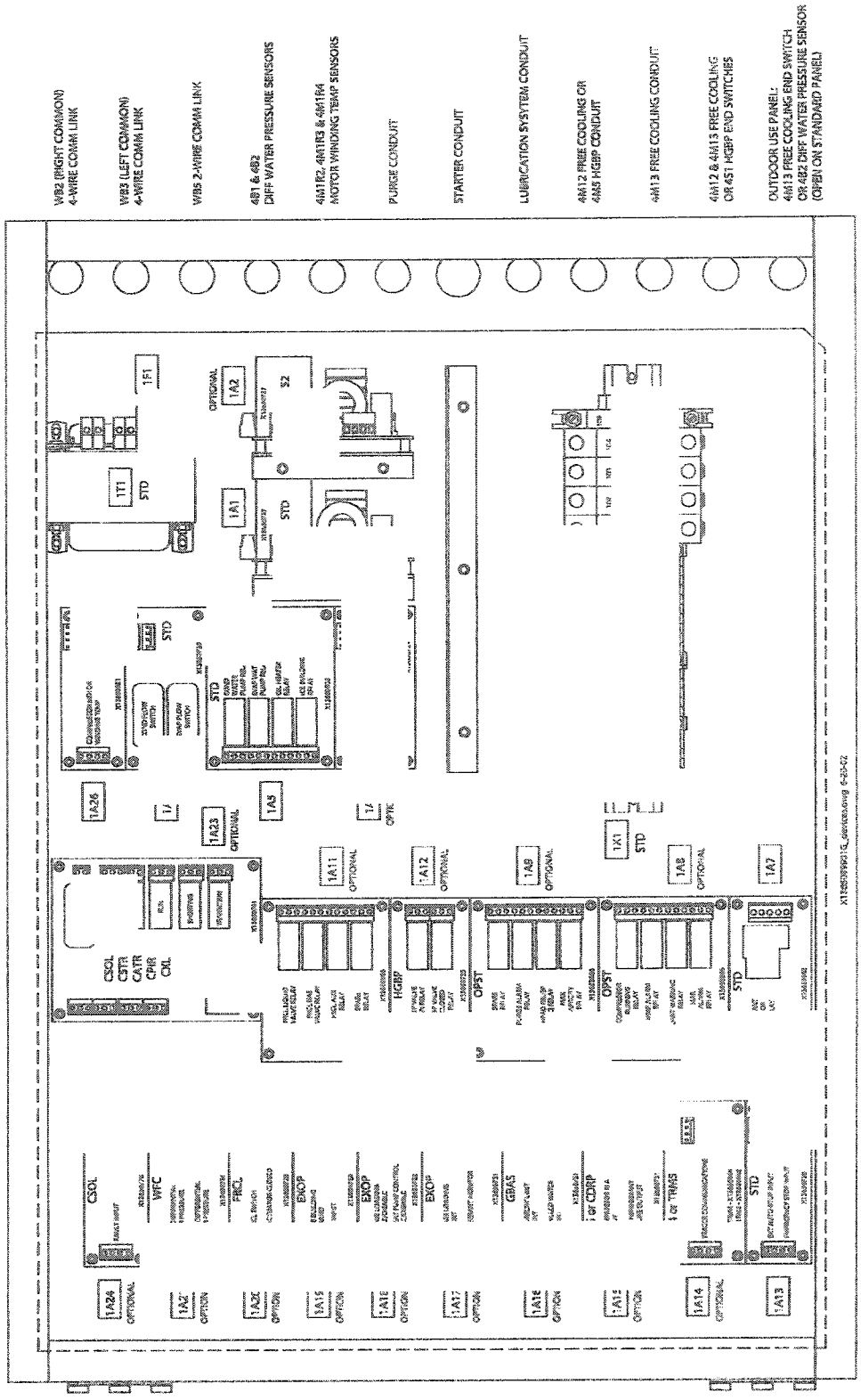

Control System Components

Control Panel Devices

Standard Devices

Description	Controls Package		Purpose	Field Connection Point Terminals
1A1 Power Supply	Standard	#1	Converts 24 vac to 24 vdc	not for field use
1A2 Power Supply	(as required)	#2	Converts 24 vac to 24 vdc	not for field use
1A3 Dual Relay Output modules	Standard	Relay #1	Oil Heater Relay	not for field use
1A4 Dual High Voltage Input	Standard		High Pressure Cutout	not for field use
1A5 Quad Relay Output modules	Standard	Relay #1	Chilled water pump (Relay #1)	J2-4 NO, J2-5 NC, J2-6 common
1A5 Quad Relay Output modules	Standard	Relay #2	Condenser water pump control (relay #2)	J2-1 NO, J2-2 NC, J2-3 common
1A6 Dual High Voltage Input	Standard	Input 1	Condenser Flow Input	J2-2 Condenser water flow switch
1A6 Dual High Voltage Input	Standard	Input 2	Evaporator Flow Input	J3-2 Chilled water flow switch
1A7 High Power Output Relay	Standard		Oil Pump and Refrigerant Pump	not for field use
1A13 Dual LV Binary input module	Standard	Signal #1	External Auto Stop,	J2-1 Binary Input Signal #1, J2-2 Ground
1A13 Dual LV Binary input module	Standard	Signal #2	Emergency stop	J2-3 Binary Input Signal #2, J2-4 Ground
1A26*	Standard		Compressor Motor Winding Temp Sensor	not for field use
1F1	Standard		LLID Power Supply Transformer Primary Circuit protection	not for field use
1T1	Standard		Control Panel Power Transformer ; 120:24Vac	not for field use
1Q1	Standard		Circuit Breaker - Compressor Motor Controller Control Power Branch Circuit	not for field use
1Q2	Standard		Circuit Breaker - Purge System Branch Circuit	not for field use
1Q3	Standard		Circuit Breaker – Module [- LLID] Power Supply Branch Circuit	not for field use
1Q4	Standard		Circuit Breaker - Oil System Control Branch Circuit	not for field use
1Q5	Standard		Oil Pump Motor Branch Circuit protection	not for field use
1X1 Terminal Block	Standard		Control Panel Terminal Block, Flow switch connections	1X1-5 Chilled water flow flow switch input 1X1-6 Condenser water flow switch input

*previously was located in Purge Control Panel

Control System Components

Chilled and Condenser Water Flow Interlock Circuits

Proof of chilled water flow for the evaporator is made by the closure of flow switch 5S1 and the closure of auxiliary contacts 5K1 on terminals 1X1-5 and 1A6-J3-2. Proof of condenser water flow for the condenser is made by the closure of flow switch 5S2 and the closure of auxiliary contacts 5K2 on terminals 1X1-6 and 1A6-J2-2.

OPST Operation Status Option
Relay output modules 1A8 and 1A9 provide relay outs as shown:

1A8 Optional Quad Relay Output Status	OPST	Relay #1	Compressor running relay,	J2-10 NO, J2-11 NC, J2-12 common
1A8 Optional Quad Relay Output Status	OPST	Relay #2	MMR Alarm Relay, (Latching)	J2-7 NO, J2-8 NC, J2-9 common
1A8 Optional Quad Relay Output Status	OPST	Relay #3	Limit Warning Relay,	J2-4 NO, J2-5 NC, J2-6 common
1A8 Optional Quad Relay Output Status	OPST	Relay #4	MAR Alarm Relay (Non-Latching)	J2-1 NO, J2-2 NC, J2-3 common
1A9 Optional Quad Relay Output Status	OPST	Relay #2	Purge Alarm Relay	J2-7 NO, J2-8 NC, J2-9 common
1A9 Optional Quad Relay Output Status	OPST	Relay #3	Head Relief Request Relay	J2-4 NO, J2-5 NC to J2-6 common
1A9 Optional Quad Relay Output Status	OPST	Relay #4	Maximum Capacity Relay	J2-1 NO, J2-2 NC, to J2-3 common

Head Relief Request Output

When the chiller is running in Condenser Limit Mode or in Surge Mode, the head relief request relay (1 minute default) on the 1A9–J2-6 to J2-4 will be energized and can be used to control or signal for a reduction in the entering condenser water temperature. Designed to prevent high refrigerant pressure trip-outs during critical periods of chiller operation.

If the unit is not equipped with the CDPR Enhanced Condenser Limit Option the unit will use the condenser refrigerant temperature sensor (input converted to saturated refrigerant pressure) to perform the Standard Condenser Limit function, without the head relief request relay, by limiting inlet guide vane stroke and chiller capacity.

Keep in mind that Condenser Limit Control supplements the protection provided by the condenser pressure high pressure cutout switch 3S1.

Compressor Motor Winding Temp Sensor Module

The motor temperature module 1A26 connects via unit wiring to the three motor winding temperature sensors.

Maximum Capacity Relay (TechView adjustable)

When the chiller has been operating at maximum capacity for 10 minutes (TechView adjustable 1 to 60 min.) this relay will activate. Also upon being less than maximum capacity for 10 minutes this relay will deactivate.

Compressor Running Relay

Relay activates while compressor is running.

Machine Shutdown Manual Reset (MMR)

Limit warning machine shutdown auto reset relays will activate with such conditions for remote status indication.

Control System Components

EXOP Extended Operation Option
The following modules (1A17, 1A18, and 1A19) are provide when this control package is specified.

1A5 Quad Relay Output modules*	EXOP	Relay #4	Ice Building Relay	J2-10 NO, J2-11 NC, J2-12 common
1A17 Optional Dual Analog Input/Output Module	EXOP	Signal #1	External Base Loading Setpoint input	J2-1 Output #1, J2-3 Ground
1A17 Optional Dual Analog Input/Output Module	EXOP	Signal #2	Refrigerant monitor inputs	J2-4 Output #2, J2-6 Ground
1A18 Optional Dual LV Binary input module	EXOP	Signal #1	External Base Loading Enable or Disable input, points	J2-1 Binary Input Signal #1, J2-2 Ground
1A18 Optional Dual LV Binary input module	EXOP	Signal #2	External Hot Water Control Enable or Disable input	J2-3 Binary Input Signal #2, J2-4 Ground
1A19 Optional Dual LV Binary input module	EXOP	Signal #1	Ice Building Control Enable or Disable input point	J2-1 Binary Input Signal #1, J2-2 Ground

*previously was 1A10

Refrigerant Monitor Input 1A17

Analog type input 4-20ma input signal to the 1A17 J2-4 to J2-6 (ground). This represents 0-100 ppm.

Control System Components

FRCL (Free Cooling Option)

1A11 Optional Quad Relay Output Status	FRCL	Relay #1	Free Cooling Relay 1,	J2- 4 NO to J2-6 common
1A20 Optional Dual LV Binary input module	FRCL	Signal #1	External Free Cooling Switch,	J2-1 Binary Input Signal #1, J2-2 Ground
1A20 Optional Dual LV Binary input module	FRCL	Signal #2	Free Cooling Valves closed	Not for field use

HGBP (Hot Gas Bypass Option)

1A7 Dual High Voltage Binary input	HGBP	#1	Hot Gas Bypass input	Not for field use
1A12 Optional Quad Relay Output Status	HGBP	Relay #1	Auxiliary relays	Not for field use

TRM/M TRM4 (Tracer Comm 4 interface)

1A14 Optional Communication Interface Module	TRM4 or LCI-C	Tracer Communications	J2-1 COMM+, J2-2 COMM -J2-3, COMM +J2-4, COMM -,

*CDRP (Condenser Refrigerant Pressure Output)**

1A15 Optional Dual Analog Input/output Module	CDRP or GBAS	Signal #2	Condenser Refrigerant Pressure output	J2-4 Output #2, J2-6 Ground

EPRO (Enhanced Protection)

4R22	EPRO	Condenser Refrigerant Pressure Transducer
4R16	EPRO	Compressor Discharge Refrigerant Temperature Sensor. (This is also included with H6BP).
4R1	EPRO	Inboard Bearing Temperature Sensor
4R2	EPRO	Outboard Bearing Temperature Sensor

*See CTV-PRB006-EN for "Condenser Water Temperature Control".

Control System Components

CDRP Refrigerant Pressure Output Option 1A15:

Refrigerant Pressure Output can be configured at commissioning to correspond to either A) the absolute condenser pressure, or B) the differential pressure of the evaporator to condenser pressures.

This vdc output is located at 1A15 – J2 – 4 (+) to J2-6 (Ground)

The Voltage DC Output can source a maximum of 22 mA of current.

This output is Voltage DC only, 4-20mA is not supported.

A) Condenser Pressure Output.
2 to 10 Vdc corresponds to 0 Psia to the HPC (in Psia) setting.

Note: Controls allow Delta Pressure or condenser pressure output, but not both.

Temperature based
On standard machines the Percent Condenser Pressure Indication Output is based on the Saturated Condenser Refrigerant and a temperature to pressure conversion is made.

If the Condenser Saturated Temperature goes out of range due to an open or short, a pressure sensor diagnostic will be called and the output will also go to the respective out of range value. That is, for an out of range low on the sensor, the output will be limited to 2.0 VDC. For an out of range high on the sensor, the output will be limited to 10.0 VDC.

Pressure based
With the Enhanced Protection EPRO option, a condenser pressure transducer is installed and the pressure is measured.

If the Condenser Pressure sensor goes out of range due to either an open or short, a pressure sensor diagnostic will be called and the output will go to end of range low. That is, for an out of range low on the sensor, the output will be limited to 2.0 VDC. For an out of range high on the sensor, the output will be limited to 2.0 VDC.

Figure 21. Condenser pressure based output

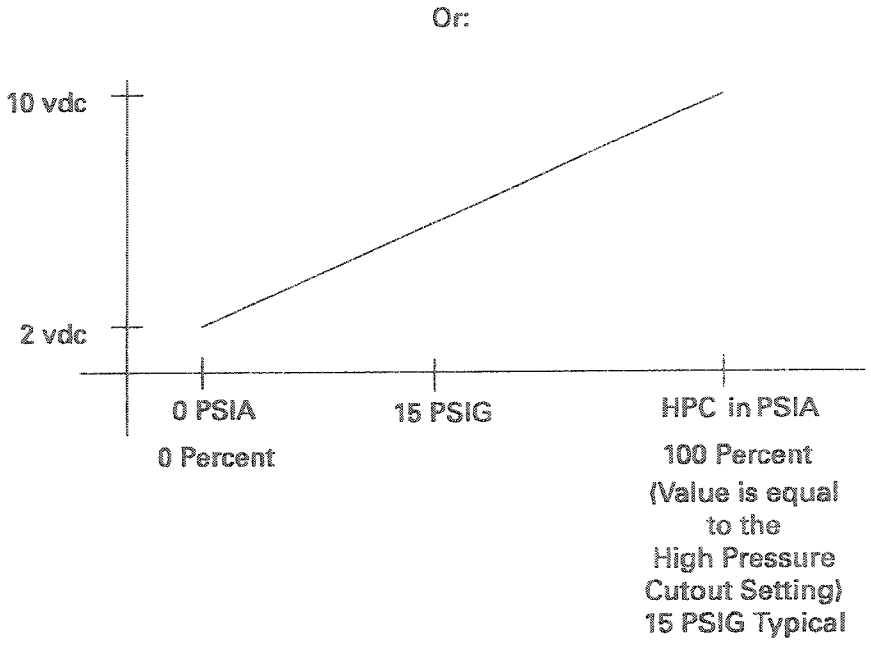

Control System Components

B) Refrigerant Differential Pressure Indication Output:
A 2 to 10 VDC analog output is provided instead of the previous condenser pressure output signal. This signal corresponds to a predetermined minimum and maximum pressure settings setup at commissioning of this feature. This relationship can be altered using the service tool if required.

The "Minimum Delta Pressure " is typically set to 0 psi and will then correspond to 2 vdc. The "Maximum Delta Pressure " is typically set to 30 psi and corresponds to 10 vdc.

The Minimum Delta Pressure Calibration setting has a range of 0-400 psid (0-2758 kPa) in increments of 1 psid (1kPa). The Maximum Delta Pressure Calibration setting has a range of 1-400 psid (7-2758 kPa) in increments of 1 psid (1kPa). The condenser refrigerant pressure is based on the Condenser Refrigerant Temperature sensor if the Condenser Pressure Option is selected as "Not Installed" at the display.

The evaporator refrigerant pressure is based on the Saturated Evaporator Refrigerant Temperature Sensor.

See CTV-PRB006-EN for additional information about condenser water temperature control.

Figure 22. Delta pressure setting - differential pressure based output (Defaults shown)

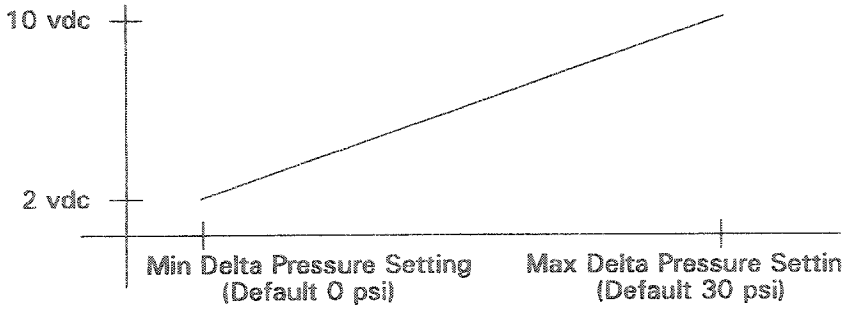

In this example, 2 vdc corresponds to 0 psi differential and 10 vdc corresponds to 30 psi differential. The min value of 0 psi, and the max value of 30 psi are individually adjustable via the service tool.

Note: Typical settings for CVHE, F, G with refrigerant pumps are as follows.

- Min pressure 0 psid (= 2 vdc)
- Max pressure 6 psid (= 10 vdc)
- Target tower control at 4 psid

Control System Components

GBAS (Generic Building Automation System)

1A15 Optional Dual Analog Input/ output Module	GBAS or CDRP	Signal #1	Percent RLA Compressor Output	J2-1 Output #1, J2-3 Ground
1A16 Optional Dual Analog Input/ output Module	GBAS	Signal #1	External Current limit Setpoint	J2-2 Input #1, J2-3 Ground
1A16 Optional Dual Analog Input/ output Module	GBAS	Signal #2	Chilled Water Reset input, or External Chiller Water Setpoint	J2-5 Input #2, J2-6 Ground

Percent RLA Output
2 to 10 Vdc corresponding to 0 to 120% RLA. With a resolution of 0.146%. The Percent RLA Output connections are on the terminals 1A15 –J2-1 (+) to J2-3 (Ground). The Percent RLA Output is polarity sensitive.

The following graph illustrates the output:

Notes: 0% RLA = 2 vdc
120% RLA = 10 vdc

Example: If RLA is 500 amps then 10 vdc = 600 amps.

Figure 23. Voltage versus percent RLA

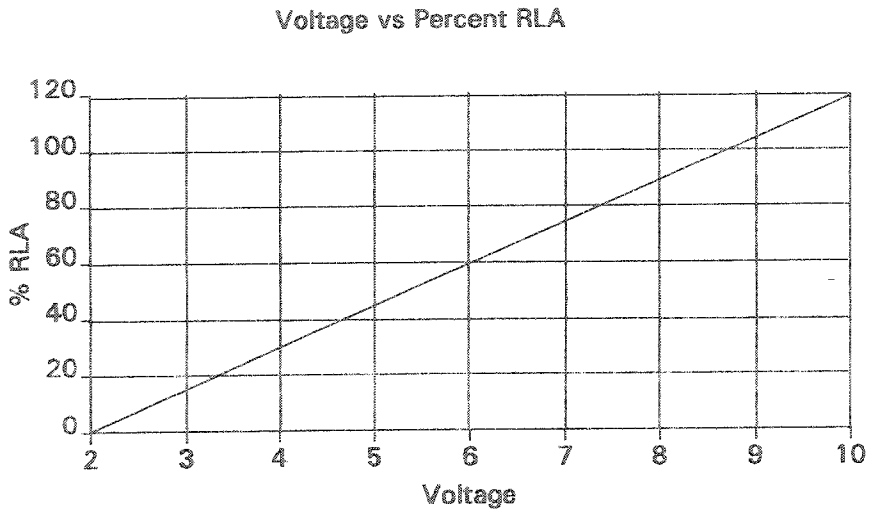

Control System Components

External Chilled Water Setpoint (ECWS)

The External Chilled Water Setpoint allows the chilled water setpoint to be changed from a remote location. The External Chilled Water Setpoint is found on 1A16 J2-5 to J2-6 (Ground). 2-10 vdc and 4-20 ma correspond to a 34°F to 65°F (-17.8 to 18.3°C) CWS range. Default 34°F to 65°F, adjustable via service tool.

External Current Limit Setpoint

The External Current Limit is an option that allows the current limit setpoint to be changed from a remote location. The External Limit Setpoint is found on 1A16 J2-2 to J2-3 (ground), 2-10 vdc and 4-20 ma each correspond to a 40 to 100 percent RLA range. UCP limits the maximum ECLS to 100 percent. Default 40 to 100%, adjustable via service tool.

Note: To use external inputs, the setpoint source setting on DynaView must be set to "Ext/FP."

The ECWS or ECLS LLID will report either a very low or very high value when there is either an open or short in the system.

When an open or short is detected (or the signal is severely beyond the valid range) on the 2-10 VDC or 4-20mA ECLS input and when the ECLS option is installed, an informational diagnostic shall be generated. The active current limit set point will default to the panel (or next priority) current limit set point. Open and short criteria will be set as close to the end of the range values as possible and still reliably detect an open and short.

WPSR (WFC Water Pressure Sensing Option)

1A21 Optional Dual Analog Input or output Module	WPSR = WFC	Signal #1	Evaporator Differential Water Pressure	Not for field use
1A21 Optional Dual Analog Input or output Module	WPSR = WFC	Signal #2	Condenser Differential Water Pressure	Not for field use

Module Characteristics

1A1, 1A2 Power Supply :
Unit Control Power Supply Module Converts 27 vac to 24 vdc.

Power Input Voltage: 23VRMS minimum, 27VRMS Nominal, 30VRMS maximum

Frequency: 50-60 Hz

Current: Full load 27 VAC – 4.30 A (RMS)

Inrush 27 VAC (RMS) ~ 30A (RMS)

Power Output: Class II Voltage 24 VDC, Rated Current 2.44 Amps. Fused @ 3 amps. (FUS01513)

1A3, 1A5, 1A10 Dual Relay Output modules :
Relay #1 J2-1 NO, J2-2 NC, J2-3 common

Relay #2 J2 4 NO, J2-5 NC, J2-6 common

Relay Outputs at 120 VAC: 7.2 Amps resistive, 2.88 Amps pilot duty, 1/3 HP, 7.2 FLA at 240 VAC: 5 Amps general purpose, 14 - 26 AWG with a maximum of two 14 AWG.

Power, 24 +/- 10 percent VDC, 60 mA maximum, Trane IPC3 protocol. J1-1 +24VDC, J1-2 Ground, J1-3 COMM + J1-4 COMM -

1A4, 1A6 Dual High Voltage Binary input module:
Binary Input Signal #1 J2-1 to 2

Binary Input Signal #2 J3-1 to 2

High Voltage Binary Input: Off Voltage: 0 to 40 VAC RMS , On Voltage: 70 to 276 VAC RMS

Input is not polarity sensitive (Hot and neutral can be switched), Input impedance 130K to 280K ohms

14 - 26 AWG with a maximum of two 14 AWG

Power, 24 +/- 10 percent VDC, 20 mA maximum. Trane IPC3 protocol. J1-1 +24VDC, J1-2 Ground, J1-3 COMM +, J1-4 COMM -

1A7 High Power Relay
Relay output contacts at 120 VAC: 16.0 Amps resistive, 6.4 Amps pilot duty, 1 HP, 16.0 FLA

J2 14-26 AWG with a maximum of two 14 AWG J2-1 NO, J2-2 NO, J2-3 NC, J2-4 COM, J2-5 COM.

Power, 24 +/- 10% VDC, 60 mA max. Communications, RS485 Physical layer, 19.2 Kbaud, Trane IPC3 protocol.

J1: J1-1 +24 VDC, J1-2 GND, J1-3 COMM +, J1-4 COMM -
J11: J11-1 +24 VDC, J11-2 GND, J11-3 COMM +, J11-4 COMM -

Control System Components

1A8, 1A9, 1A11, 1A12 Quad Relay Output Status:
Relay #1 J2-1 NO, J2-2 NC, J2-common

Relay #2 J2-4 NO, J2-5 NC, J2-6 common

Relay #3 J2-7 NO, J2-8 NC, J2-9 common

Relay #4 J2-10 NO, J2-11 NC, J2-12 common

Relay Outputs: at 120 VAC: 7.2 Amps resistive, 2.88 Amps pilot duty, 1/3 HP, 7.2 FLA, at 240 VAC: 5 Amps general purpose 14-26 AWG, two 14 AWG Maximum Power, 24 +/-10 percent VDC, 100 ma maximum. Trane IPC3 protocol.

1A13, 1A18, 1A19, 1A20 Dual Binary input module:
J2-1 Binary Input Signal #1, J2-2 Ground, J2-3 Binary Input Signal #2, J2-4 Ground

Binary Input: Looks for a dry contact closure. Low Voltage 24V 12 mA.

14 - 26 AWG with a maximum of two 14 AWG

Power, 24 +/- 10 percent VDC, 40 mA maximum Trane IPC3 protocol.

1A14 Communication interface Module
Power, 24 +/- 10 percent VDC, 50 mA maximum. Trane IPC3 protocol.

J1-1	+24 VDC	J2-1 COMM +.	J11-1 +24 VDC
J1-2	Ground	J2-2 COMM -	J11-2 Ground
J1-3	COMM +	J2-3 COMM +	J11-3 COMM +
J1-4	COMM -	J2-4 COMM -	J11-4 COMM -

Control System Components

1A15, 1A16, 1A17, 1A21 Dual Analog Input/output Module;
Analog Output: The Analog Output is a voltage only signal. 2-10 Vdc at 22mA

J2: 14 - 26 AWG with a maximum of two 14 AWG

J2-1 Output #1 to J2-3 (Ground), J2-4 Output #2 to J2-6 (Ground).

UCP provides a 2-10 Vdc analog signals as Outputs. The Output's maximum source capability is 22mA. The maximum recommended length to run this signal is included in the table below.

Recommended Length to Run external Output signals

Gauge	Ohms per Feet	Length (Feet)	Maximum Length (Meters)
14	0.00 2823	1062.7	324
16	0.004489	668.3	203.8
18	0.007138	420.3	128.1
20	0.01135	264.3	80.6
22	0.01805	166.3	50.7
24	0.0287	104.5	31.9
26	0.04563	65.7	20
28	0.07255	41.4	12.6

Note: the above table is for copper conductors only.

Analog Input:
The analog input can be software switched between a voltage input or a current input. When used as a current input a 200 Ohm load resistor is switched in.

2-12 Vdc or 4 to 20 mA Analog Inputs
UCP accepts either a 2-10 Vdc or 4-20 analog input suitable for customer external control. The type is determined at unit commissioning during feature installation.
J2: 14 - 26 AWG with a maximum of two 14 AWG
J2-2 Input #1 to
J2-3 (Ground).
J2-5 Input #2 to
J2-6 (Ground).
Power, 24 +/- 10 percent VDC, 60 mA maximum, Trane IPC3 protocol.

Control System Components

Unit mounted devices

Vane Actuator Control
The Stepper Module within the stepper vane actuator (4M2) (and 4M4 extended capacity) pulses a DC voltage to the windings of the Stepper Motor Actuator(s) to control inlet guide vane position. While operation of this stepper motor is automatic, manual control is possible by going to the Mode Overrides settings menu within the DynaView™. Compressor Control Signal allow the operator to manually increase or decrease the compressor load by adjusting the compressor control signal.

Note: If the chiller is operating in a limit mode (current limit, condenser limit, evaporator limit, etcetera.) The limit operation has priority over all DynaView™ manual modes of operation.

On each UCP power-up, the inlet guide vanes are driven full closed to recalibrate the zero position (Steps) of the Stepper motor vane actuator.

Temperature sensors,
Evaporator sensors 4R6 and 4R7, and condenser sensors 4R8, 4R9 entering and leaving, bearing temperature sensors 4R1, 4R2, oil temperature sensor 4R5, outdoor air temperature 4R13, and evaporator 4R10 and condenser 4R11 saturated refrigerant temperature sensors.

Probe Operating Temperature Range - 40 to 250°F (-40 to 121°C)
Accuracy +/- 0.25°C over the range -4 to 122°F (-20 to 50°C), +/- 0.50°C over the range -40 to 250°F (-40 to 121°C)
Power and Communications and Terminations Power 24 +/- 10% VDC, 20 mA maximum.
Trane IPC3 protocol Communications.

Pressure sensors
Oil tank sump 4R4 and oil pump discharge 4R3, evaporator and condenser refrigerant pressure 4R22,
Working Pressure Range: 0 to 50 Psia
Accuracy: ± 0.3% of full scale output at 68°F (20°C)
Power and Communications and Terminations
Power 24 +/- 10% VDC, 20 mA maximum.
Communications, RS485 Physical Layer, 19.2 Kbaud, Trane IPC3 protocol.

Starter Module
In the hierarchy of modules the Starter module 2A1 (1A23 when customer supplied starter specified) is second only to the DynaView™. The starter module is present in all starter selections (except AFD) .This includes Wye Delta, Across the Line, Solid State whether remote unit mounted or supplied by others. The starter module provides the logic to provide the motor protection for Current overload, phase reversal, phase loss, phase imbalance, and momentary power loss. These functions are discussed in the motor protection section of this manual.

Relay outputs @ 120 vac: 7.2 amps resistive 2.88 amps Pilot Duty 1/3 hp, 7.2 FLA.

Relay outputs @ 240 vac: 5 amps 6 general purpose.

EarthWise™ Purge
Trane has also revolutionized its controller-integrated purge, which features an automatic regeneration system for high-efficiency, maintenance-free refrigerant containment. Air and noncondensables are pumped out faster, and the lower temperature refrigeration system enhances the base purge efficiency. See EarthWise purge operation and maintenance manual for details.

Unit-mounted medium - voltage starter
Take advantage of Tracer CH530's new starter and save space in your equipment room. There is no need for a remote or floor-mounted starter with our new, exclusive unit-mounted medium - voltage starter from Cutler-Hammer.

Adaptive Frequency™ motor drive
Tracer CH530 complements Trane's Adaptive Frequency motor drive (AFD) system for chillers better than ever before. Brand new control logic allows safe, more efficient inlet vane and motor speed control operation to maximize part-load performance and, when necessary, limit the starting current.

When equipped with the Trane Adjustable Frequency Drive (AFD) the Unit Control Panels DynaView™ also provides the Operator interface to the AFD control. The Service Tool, TechView™ is also utilized for setting service items. See the Adjustable Frequency drive operation maintenance manual that ships with the chiller for details .

Control Sequence of Operation

Electrical Sequence

This section will acquaint the operator with the control logic governing CVHE, CVHF and CVHG chillers equipped with Tracer CH530 UCP based control systems. When reviewing the step-by-step electrical sequences of operation, refer to the typical wiring schematics for Unit mounted Wye Delta starter shown in the installation manual shipped with the chiller.

Note: The typical wiring diagrams are representative of standard units and are provided only for general reference. They may not reflect the actual wiring of your unit. For specific electrical schematic and connection information, always refer to the wiring diagrams that shipped with the chiller.

With the supply power disconnect switch or circuit breaker (2Q1 or 2K3) closed, 115-volt control power transformer 2T5 and a 40-amp starter panel fuse (2F4) to terminal (2X1-1) starter panel to terminal 1X1-1 in the control panel. From this point, control voltage flows to:

1. Circuit Breaker 1Q1 which provides power to the starter module (2A1) relay outputs and the High Pressure Cutout switch (3S1).
2. Circuit Breaker 1Q2 which provides power to the Purge circuitry.
3. Circuit Breaker 1Q3 which provides power to Transformer (1T1) which steps down the 115 Vac to 24 Vac. This 24 Vac then powers the 24 Vdc power supply 1A1, and 1A2 if present. The 24 vdc is then connected to all modules via the Interprocessor communications Bus providing module power.

   1Q3 also provides power to the external chiller water proof of flow device connected between terminal block 1X1-5 to 1A6-J3-2, and condenser water proof of flow device connected at 1X1-6 to 1A6-J2-2.
4. Circuit Breaker 1Q4 which provides power to the Oil Heater 4HR1 circuit and to Circuit Breaker 1Q5 oil and refrigerant pump circuits.
5. The DynaView™ display module 1A22, receives 24 vdc power from the IPC bus.

UCP and Wye-Delta Starter Control Circuits

Logic Circuits within the various modules will determine the starting, running, and stopping operation of the chiller. When operation of the chiller is required the chiller mode is set at "Auto". Using customer supplied power, the chilled water pump relay (5K1) is energized by the 1A5 Module output at 1A5-J2-4, and chilled water flow must be verified within 4 minutes 15 seconds by the 1A6 Module. The main processors logic decides to start the chiller based on the differential to start setpoint. With the differential to start criteria met module 1A5 then energizes condenser water pump relay (5K2) via customer supplied power at 1A5 J2-1.

Based on the restart inhibit function and the differential to start setpoint, oil and refrigerant pump (4M3) will be energized by 1A7 Module (1A7-J1). The oil pressure must be at least 9 Psid for 60 continuous seconds and condenser water flow verified within 4 minutes 15 seconds minutes for the compressor start sequence to be initiated.

Control Sequence of Operation

When less than 2.5 seconds remain before compressor start, a starter test is conducted to verify contactor states prior to starting the compressor. The following test or start sequence is conducted for "Wye-Delta" starters: Also refer to Figure 24.

A. Test for transition complete contact open (2A1-J12-2) –160 to 240 msec. An MMR diagnostic will be generated if the contact is closed.

B. Delay time - 20 msec.

C. Close start contactor (2K1) and check for no current - 500 msec. If currents are detected, the MMR diagnostic "Starter Fault Type I" is generated.

D. Stop relay (2A1-J10-3 to 1) closes for one second for test "C" above.

E. Delay time - 200 msec. (Opens 2K1).

F. Close shorting contactor, (2K3) and check for no current - one second. If currents are detected the MMR diagnostic "Starter Fault Type II" is generated. (Starter Integrity test)

G. If no diagnostics are generated in the above tests, the Stop Relay (2A1-J10) is closed for 2 seconds and the Start Relay (2A1-J8) is closed to energize the start contactor (2K1). The shorting contactor (2K3) has already been energized from (F) above. The compressor motor (4M1) starts in the "Wye" configuration, an auxiliary contact (2K1-AUX) locks in the start contactor (2K1) coil.

H. After the compressor motor has accelerated and the maximum phase current has dropped below 85 percent of the chiller nameplate RLA for 1.5 seconds, the starter transition to the "Delta" configuration is initiated.

J. The transition contactor (2K4) is closed through relay 2A1-J2, placing the transition resistors (2R1, 2R2, and 2R3) in parallel with the compressor motor windings. The run relay (2A1-J6-3 to 1) is closed.

K. The shorting contactor (2K3) is opened through the opening of relay 2A1-J4 100 msec after the closure of the transition relay 2A1-J2, and the run relay 2A1-J6.

L. The run contactor (2K2) is closed through auxillary contacts on the shorting contactor (2K3), shorting out the transition resistors. This places the compressor motor in the "Delta" configuration and the starter module waits to look for this transition for about 2.3 seconds through the closure of the transition complete contacts 2K2-Aux at module 2A1-J12 input)

M. The starter module must now confirm closure of the transition complete contact (2K2-AUX) within 2.5 seconds after the shorting relay (2A1-J4) is opened. Finally, the transition relay (2A1-J2) is opened de-energizing the transition contactor (2K4) and the compressor motor starting sequence is complete. An MMR diagnostic will be generated if the transition complete contacts (2K2-AUX) do not close. A diagram of this test or start sequence is shown in Figure 24.

Control Sequence of Operation

Now that the compressor motor (4M1) is running in the "Delta" configuration, the inlet guide vanes will modulate, opening and closing to the chiller load variation by operation of the stepper vane motor actuator (4M2) to satisfy chilled water setpoint. The chiller continues to run in its appropriate mode of operation: Normal, Softload, Limit Mode, etcetera.

If the chilled water temperature drops below the chilled water set point by an amount set as the "differential to stop" setpoint, a normal chiller stop sequence is initiated as follows: (Refer to Figure 10.)

1. The inlet guide vanes are driven closed up to 50 seconds.
2. After the inlet guide vanes are closed, the stop relay (2A1-J10) and the condenser water pump relays (1A5-J2) open to turn off. The oil and refrigerant pump motor (4B3) will continue to run for 3 minutes post lube while the compressor coasts to a stop. The chilled water pump will continue to run while the Main processor module (1A22) monitors leaving chilled water temperature preparing for the next compressor motor start based on the "differential to start" setpoint.

If the STOP key is pressed on the operator interface, the chiller will follow the same stop sequence as above except the chilled water pump relay (1A5-J2) will also open and stop the chilled water pump after the chilled water pump delay timer has timed out after compressor shut down.

If the "Immediate Stop" is initiated, a panic stop occurs which follows the same stop sequence as pressing the STOP key once except the inlet guide vanes are not sequence closed and the compressor motor is immediately turned off.

Control Sequence of Operation

Figure 24. Test and start timing sequence

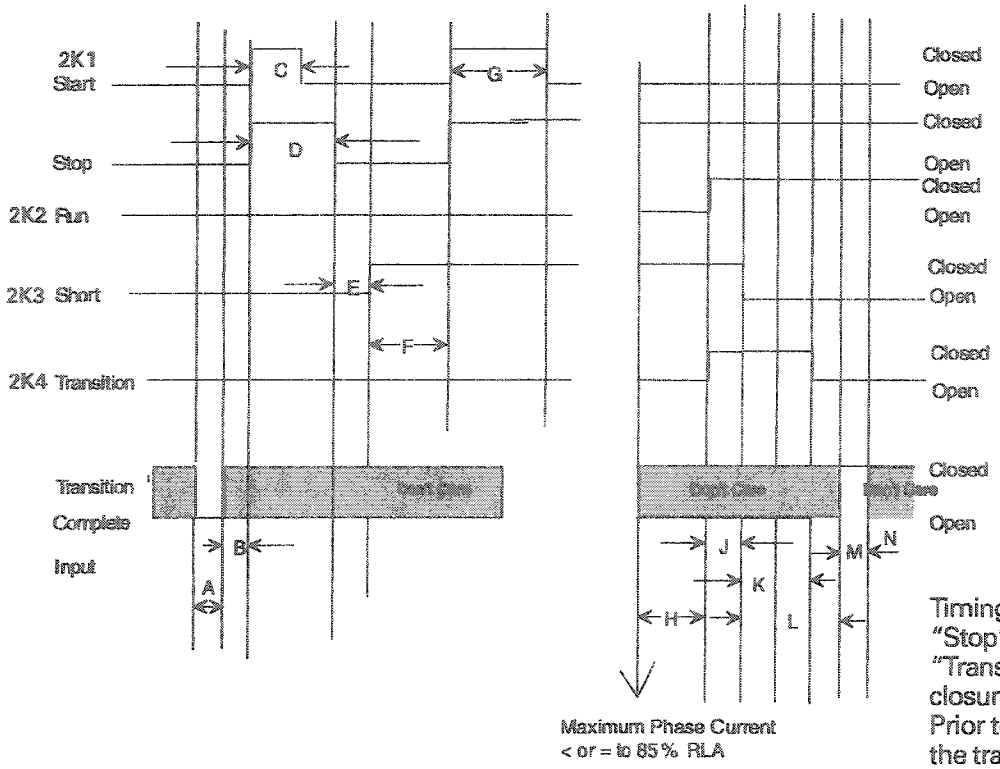

Timing requirements to operate the "Stop", "Start", "Short", "Transition", and "Run" contact closure outputs are shown below. Prior to closing the "Short" contact, the transition complete input shall be verified to be open, otherwise an MMR diagnostic shall be generated.

Steps A to F: Starter Integrity Test.
Steps F to N: Starter Timing

Interval	Minimum	Maximum	Units	Actual Design
A. (Test for transition complete input open)				160 to 240 milliseconds
B. (Just delay time)				20 milliseconds
C. (Close 1M (2K1) Contactor and test for no current.) (Starter integrity test)				500 milliseconds
D. (Hold 1M (2K1) Contactor and test for no current.) (Starter integrity test)				1 second
E. (Open 1M (2K1) Delay time				200 milliseconds
F. (Close Shorting Contactor (2K3) and and test for no current, then wait for Start command.) (Starter integrity test)	100		milliseconds	1 second (Minimum)
G. (Close 1M (2K1)	2.0		second	2 second
H. (Wait 1.5 seconds after phase currents drop to 85 percent)	1	2	second	1.5 second
J. (Begin Transition sequence)	85	100	milliseconds	100 milliseconds
K. (Open S (Shorting) Contactor)	250	300	milliseconds	260 milliseconds
L. (Close 2M (2K2) Contactor				140 milliseconds
M. (Wait to look for Transition complete)			milliseconds	2.32 to 2.38 second
N. (Filtering time on Transition complete input)			milliseconds	160 to 240 milliseconds

Control Sequence of Operation

Current passing through fuse 1F2 reaches 2 normally open parallel sets of contacts: those of refrigerant and oil pump relay (1A7-J2-5 to 1), and the start contactor 2K1-aux. Connecter at module 1A7-J2-2 to 4.

Note: While the (1A7-J2-5 to 1) relay automatically is closed by the main processor 1A22 as a part of the start sequence. It can also be closed manually by changing the oil pump status to "ON" in the manual over ride mode menu of DynaView™.

Closure of the (1A7-J2-5 to 1), or 2K1 auxiliary contacts also allows current to pass through the coil of the refrigerant pump starter relay (4K8),

Maximum Acceleration Timer Setting by Starter Type	
Wye-Delta	27 Seconds
Auto-Transformer	16
Primary Reactor	16
Across the Line	6
Solid State	25
AFD	30

to the start windings of the refrigerant pump. When motor 4M3 first starts, current draw is high: This causes current sensing relay 4K8 to close its normally open contacts and pull in pump Capacitor 4C1. Increasing motor speed and related decreasing current through the main winding and relay coil reduce the magnetic force and the armature "Drops out" to open the start contacts and disconnect the start windings and capacitor. Current now flows only to the Run windings of the oil pump motor or refrigerant and oil pump motor.

Machine Protection and Adaptive Control

Momentary Power Loss (MPL) Protection.

Improved power measurement and protection algorithms allow the unit to accommodate more power anomalies than ever. If the chiller must shut down, faster restarts get the machine up and running as soon as possible.

Momentary power loss (MPL) detects the existence of a power loss to the compressor motor and responds by initiating the disconnection of the compressor motor from the power source. Power interruptions of less than 30 line-cycles are defined as momentary power losses. Tests have shown that these short-term power interruptions can be damaging to the motor and compressor if the chiller is reconnected to the line while the motor and line phases do not match. The chiller will be shut down when a MPL is detected and will display a non-latching diagnostic indicating the failure. The oil pump will be run for the post-lube time period when power returns. The compressor and compressor motor are protected from damage from large torques and inrush currents resulting from reconnecting the compressor motor to the power source following a momentary loss of power.

MPL's greater than 2 or 3 cycles are detected resulting in unit shut down. Disconnection from the line is initiated within 6 line cycles of the power loss. MPL protection is active anytime the compressor is in the running mode. (The transition complete input has been satisfied).

MPL is enabled however can be disabled, if required via the service tool.

Figure 25. CVHE, CVHF, and CVHG sequence of operation: momentary power loss, (DynaView™ and Starter module remain powered)

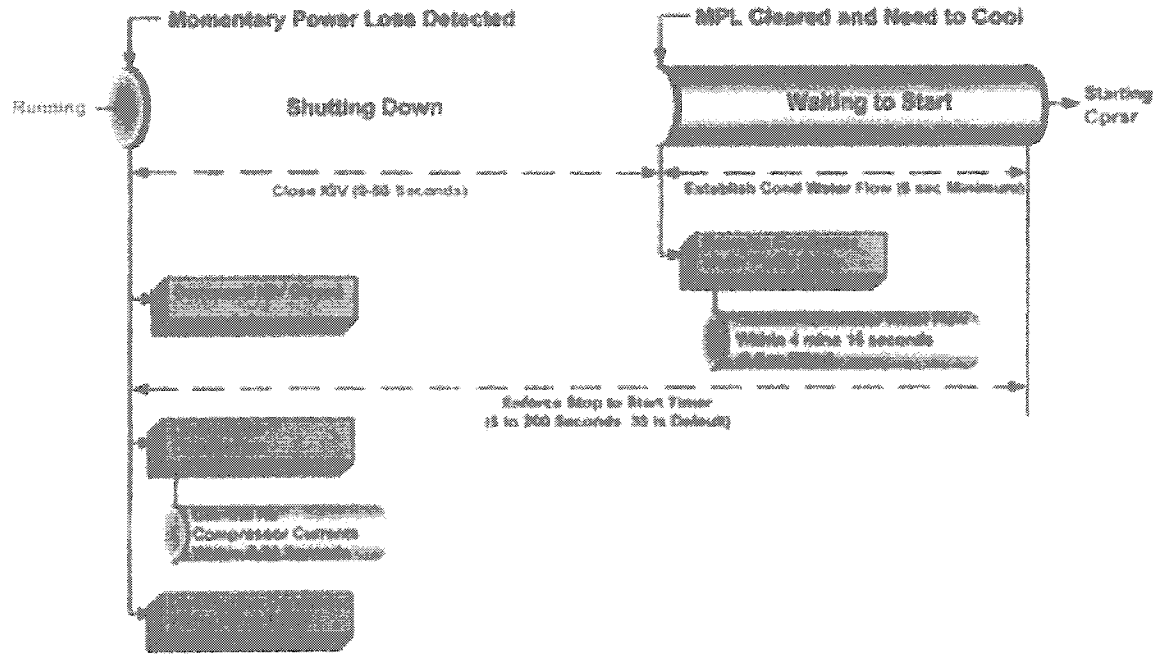

Machine Protection and Adaptive Control

Current Overload Protection

Motor currents are continuously monitored for over current protection and locked rotor protection. This protects the Chiller itself from damage due to current overload during starting and running modes but is allowed to reach full load amps. This overload protection logic is independent of the current limit. The overload protection will ultimately shut the unit down anytime the highest of the three phase currents exceeds the time-trip curve. A manual reset diagnostic describing the failure will be displayed.

Overload protection for the motor starts based on the Maximum Time to Transition permitted for a particular motor .

Running Over Current Protection

In the run mode, a "time-to-trip" curve is looked at to determine if a diagnostic should be called. The UCP continuously monitors compressor line currents to provide running over current and locked rotor protection. Over current protection is based on the line with the highest current. It triggers a manually resettable diagnostic shutting down the compressor when the current exceeds the specified time-trip curve. The compressor overload time trip curve is expressed as a percent of the Rated Load Amps of the compressor and is not adjustable:

Overload Must Hold = 102 Percent RLA.
Overload Must Trip in 20 (+0 -3) seconds = 112 Percent RLA
(Note the above gives a nominal 20 second must trip point of 107 Percent RLA.)
Overload Must Trip in 1.5 seconds = 140 Percent RLA (Nominal)

The linear time-trip curve is as follows:

Figure 26. Overload trip time versus percent RLA

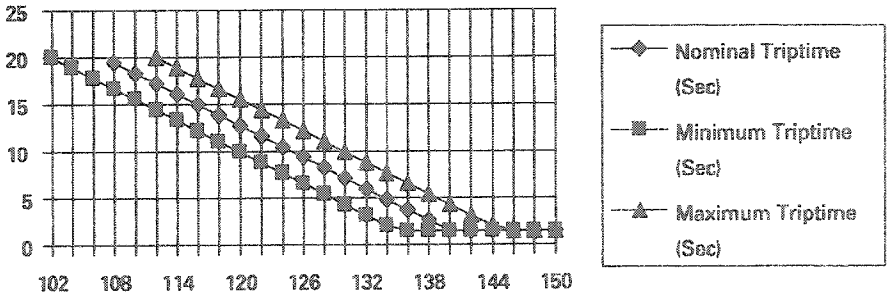

The Maximum Acceleration Time Setting and Current Transformer Setting are factory set however can be set with the service tool;

Machine Protection and Adaptive Control

Current Limit Protection

Current Limit Protections exist to avoid motor current overload and damage to the compressor motor during starting and running. Compressor motor current is continuously monitored and current is controlled via a limit function that to prevent running into over current diagnostic trips.

The current limit control logic attempts to prevent the motor from shutting down on a diagnostic trip by limiting compressor current draw relative to an adjustable current limit DynaView™ Current Limit Setpoint. This setpoint can also be lowered to provide electrical demand limiting on the unit as required. This could also be set to allow the Chiller to continue to run at a lower load to avoid tripping off via a diagnostic.

The Current Limit function uses a PID algorithm (Similar to the Leaving Water Temperature control) that allows the chiller to run at the Current Limit Setpoint. At machine startup, or with any setpoint change the new current limit setpoint reached after the is filtered setpoint time elapses. The minimum current limit setpoint is default set to 40 percent RLA (20-100 percent). The filtering time is default set to 10 minutes (0-120 minutes), however these can be altered via the service tool. This filtered setpoint allows for stable control if the Current Limit setpoint is adjusted during a run.

The Current Limit Setpoint (CLS) can be changed from: Front Panel, External Analog input (with GBAS option), or Tracer (Tracer option). However, if present Tracer current setpoint has the highest priority, unless disabled in the DynaView™ Setpoint source override menu. The External CLS has second priority, and will be used if Tracer is disabled or not installed. The Front Panel Setpoint has the lowest priority, and will be used if Tracer and the External CLS are both disabled.

Phase Loss Protection

Loss of phase detection protects the chiller motor from damage due to a single-phasing condition. The controls will shut down the chiller if any of the three phase currents feeding the motor are lost. The shutdown will result in a latching diagnostic indicating the failure. The motor is protected from over-current during a single-phase condition by the Current Overload Protection feature. Phase Loss Protection provides redundant protection and a diagnostic that more accurately describes the fault.

Reverse Rotation Protection

This function protects the compressor from being driven in the reverse direction. Incorrect phase rotation detection results in a manually resettable diagnostic. Phase Reversal protection is default to Enable, however can be disabled via the service tool.

Phase Imbalance Protection

CH530 provides phase imbalance protection based on the average three-phase current. The three phase currents supplied to the motor are monitored for unequal amperage draw. Motor overload is not considered to be a problem since each phase of the motor is monitored for overcurrent. In addition, since each phase is monitored for loss of current, the motor will be protected against single phasing.

Under and Over Voltage Protection

Under/over voltage protection can be enabled (default) or disabled via TechView.

If Disabled : No effect.

If Enabled :

and an Overvoltage condition occurs:

-Diagnostic called when the average of the three line voltages is greater than 112.5% of the unit line voltage set point for 60 seconds.

-Diagnostic cleared when the average of the three line voltages is 110% or less of the unit line voltage set point.

and an Undervoltage condition occurs:

-Diagnostic called when the average of the three line voltages is less than 87.5% of the unit line voltage set point for 60 seconds.

-Diagnostic cleared when the average of the three line voltages is 90% or greater of the unit line voltage set point.

Machine Protection and Adaptive Control

Differential to Start or Stop

The Differential to Start setpoint is adjustable from 1 to 10°F (0.55 to 5.55°C) and the Differential to Stop setpoint adjustable from 1 to 10°F (0.55 to 5.55°C). Both setpoints are with respect to the Active Chilled Water Setpoint. When the chiller is running and the LWT (Leaving Water Temperature) reaches the Differential to Stop setpoint the chiller will go through its shutdown sequence to AUTO. (Refer to Figure 10.)

SoftLoading

Softloading stabilizes the startup control during the initial chiller pulldown. Soft loading is used to bring the building loop temperature from its start value to the Chilled Water or Hot Water Setpoint in a controlled manner. Without soft loading, the chiller controls will load the chiller rapidly and use the full chiller capacity to bring the loop temperature to setpoint. Although the start temperature of loop may have been high, the actual system load may be low. Thus, when the setpoint is met the chiller must unload quickly to the system load value. If it is not able to unload quickly enough, the supply water temperature will drop below setpoint and may even cause the chiller to cycle off. Soft loading prevents the chiller from going to full capacity during the pulldown period. After the compressor has been started, the starting point of the filtered setpoint is initialized to the value of the Evaporator Leaving Water temperature and the percent RLA.

There are three independent Softload setpoints:

- Capacity Control Softload Time (default to 10 minutes, 0-120 minutes) This setting controls the time constant of the Filtered Chilled Water Setpoint.
- Current Limit Control Softload Time (default 10 minutes; 0-120 minutes) This Setting controls the time constant of the Filtered Current Limit Setpoint.
- Current Limit Softload Starting Percent (default is 40 percent RLA; 20-100 percent): This setting controls the Starting point of the Filtered Current Limit Setpoint

Service tool provides access to these three setpoints, if it is determined necessary to change from the defaults.

Softloading is not active during Ice Making or during the Ice To normal Transition. Softloading will be enabled after the Ice to normal Transition timer has expired.

Softloading is not active during Free Cooling, The softloading is active during the transition from Free Cooling to Powered operation.

Softloading times can be active during Hot Gas Bypass Control

Minimum and Maximum Capacity Limit

A Minimum Capacity can be set to limit the unloading ability of the compressor thus forcing differential to stop to be reached cycling the chillers. Minimum capacity limit will be displayed when in this limit mode. This indicates when the chiller is running fully unloaded.

Similarly a maximum capacity can be set to limit normal chilled water temperature control, the maximum capacity relay is energized which is a signal used by generic BAS systems to start another chiller.

The minimum (default at 0 percent) and maximum (default at 100 percent) capacity are adjustable via the service tool.

Machine Protection and Adaptive Control

Evaporator Limit

Evaporator refrigerant temperature is continuously monitored to provide a limit function that prevents low refrigerant temperature trips which allows the chiller to continue to run at a reduced load instead of tripping off at the Low Evaporator Refrigerant Temperature Cutout Setpoint (LRTC).

Evaporator limit could occur with an initial pull down of a loop where the Condenser is colder than the Evaporator (Inverted Start), the Evaporator refrigerant temperature may drop below the Low Refrigerant Temperature Cutout (LRTC). This limit prevents the unit from shutting down on a diagnostic during this type of pulldown. Another example is a Chiller that is low on refrigerant charge will run with low Evaporator refrigerant temperatures. This limit allows the chiller to continue to run at a reduced load.

Evaporator Limit uses the Evaporator Refrigerant Temperature sensor in a PID algorithm (Similar to the Leaving Water Temperature control) that allows the chiller to run at the LRTC + 2 degree F.

When actively limiting machine control "Evaporator Temperature Limit" will be displayed as a sub-operating mode.

Leaving Water Temperature Cutout

Leaving water temperature cutout is a safety control that protects the chiller from damage caused by water freezing in the evaporator. The cutout setpoint is factory set however is adjustable with the Service tool.

The "Leaving Water Temperature Cutout Setpoint" is independently adjustable from the chilled water setpoint and factory set. Shutdown of the compressor due to violation of the Leaving Water Temperature Cutout results in an automatically resettable diagnostic (MAR). The DynaView™ Operating Mode indicates when the "Leaving Water Temperature Cutout Setpoint" conflicts with the chilled water temperature setpoint by a message on the display. The "Leaving Water Temperature Cutout Setpoint" and chilled water setpoint, both active and front panel, are separated by a minimum of 1.7°F. See Cutout Strategy, Figure 27. When either difference is violated, the UCP does not permit the above differences to be violated and the display exhibits a message to that effect and remains at the last valid setpoint. After violation of the "Leaving Water Temperature Cutout Setpoint" for 30°F seconds the chiller will shutdown and indicate a diagnostic.

Machine Protection and Adaptive Control

High Evaporator Leaving Water Temperature Cutout

(Main Processor Software Revision 6.0 and higher)
A High Evaporator Water Temperature Diagnostic was implemented that will turn off the Evaporator Water pump relay if the relay is being forced on due to a Loss of Evaporator Water Flow Lost diagnostic (MAR Diagnostic) and the Evaporator Leaving Water Temperature exceeds an adjustable High Evaporator Water Temperature Cutout for 15 continuous seconds. The High Evaporator Water Temperature diagnostic is an immediate shutdown and is nonlatching. The diagnostic will auto reset and the pump will return to normal control when the temperature falls 5°F below the cutout setting. High Evaporator Water Temperature Cutout is a setpoint that is adjustable in TechView from 80°F and 150°F. The default is 105°F.

Low Refrigerant Temperature Cutout

The purpose of the low evaporator refrigerant temperature protection is to prevent water in the evaporator from freezing. When the Low Evaporator Refrigerant Temperature Cutout (LRTC) trip point is violated, a latching diagnostic indicating the condition is displayed. The Low Evaporator Refrigerant Temperature Diagnostic is active in both the Running and Stopped modes.

The Low Evaporator Refrigerant Cutout Setpoint is factory set to 36°F. This can be altered via the service tool. A Service Tool adjustable setpoint that should be based on the percentage of antifreeze used in the customer's water loop. The Service tool will display a warning message such as "Warning: Adequate Antifreeze required" for any Evaporator Refrigerant Temperature Cutout below 28°F and any Leaving Water Temperature Cutout below 35°F.

The percent of antifreeze required is a function of the leaving water temperature setpoint and the worse case (lowest permitted water flow) approach temperatures of the chiller's evaporator design.

Head Relief Relay
(See page 53 also)

Surge, condenser limit, and certain conditions on ice mode will energize the head relief relay. Note: There is a TechView programmable head relief relay filter times setpoint. The default is one minute.

Machine Protection and Adaptive Control

Figure 27. Cutout strategy

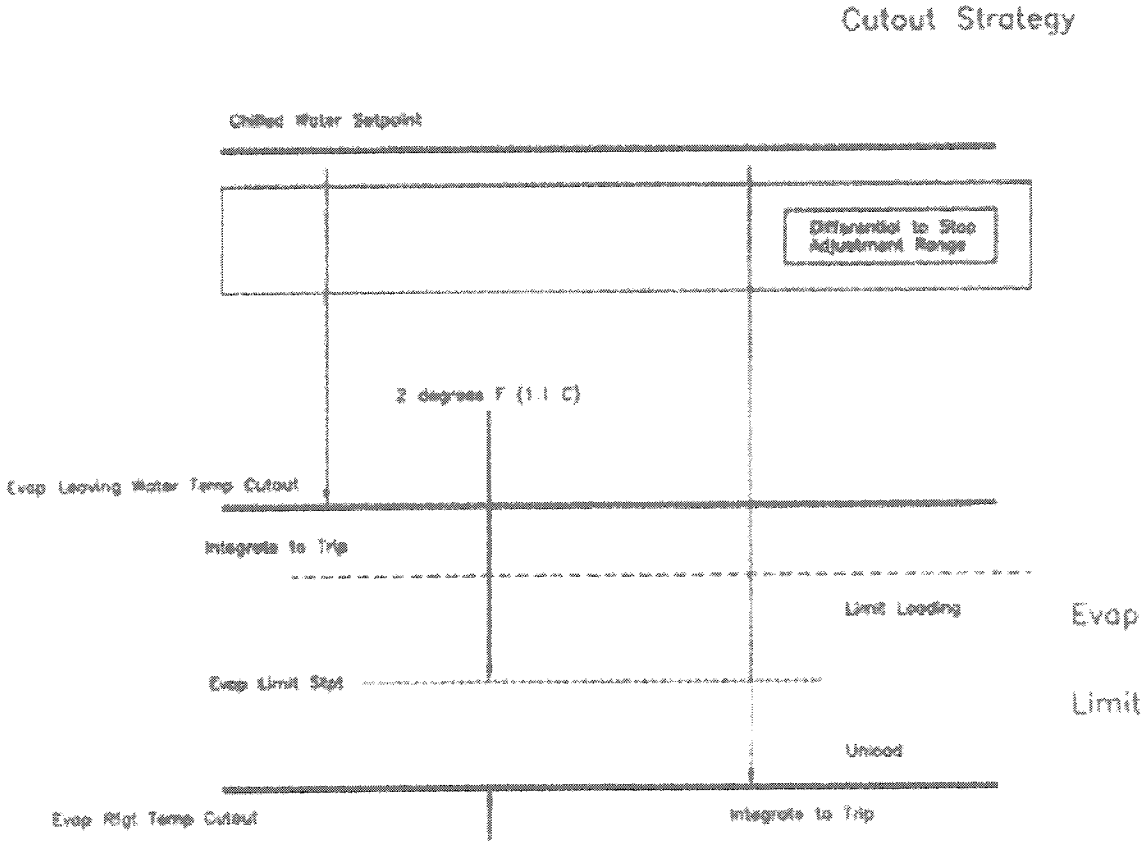

Limit Loading: The potential to limit loading increases as the saturated evaporator temperature approaches the evaporator limit setpoint.

Unload: The potential to unload increases as the saturated evaporator temperature falls further below the evaporator limit setpoint.

Figure 27 illustrates these functions as follows:
- chilled water setpoint
- evap leaving water temp cutout
- evap rfgt temp output

Machine Protection and Adaptive Control

Evaporator Variable Flow Compensation

This option includes transducers for the differential evaporator and condenser water pressures (psid). Flow switches or some other means to prove flow are still required and must be field connected.

The following data will be shown at the DynaView and TechView displays and at Tracer Summit.

- Evaporator and condenser differential water pressures (psid)
- Evaporator and condenser gpm
- Evaporator tons

How It Works

The Tracer chiller controller uses a patented, variable, water-flow compensation algorithm to maintain stable, precise capacity control. Variable flow compensation is a new optional control feature for CTV chillers.

It will automatically adjust capacity control to:

- Maintain control stability at low flow.
- Reject variable-flow disturbance.

If the water-pressure transducer fails and the flow switch continues to prove flow, water-flow compensation will be disabled and the design delta T will be used.

For applications designed to operate with variable-primary (VPF) water-flow, variable flow compensation allows the chiller to respond quickly to accelerating or decelerating water. By automatically adjusting the control gain, large changes in the water-flow rate can be tolerated.

For details, refer to CTV-PRC007-EN.

Condenser Limit

Condenser pressure is continuously monitored to provide a limit function that prevents High Pressure Cutout (HPC) trips. This protection is called Condenser Refrigerant Pressure Limit, or High Pressure Limit. A fully loaded compressor, operating at high Evaporator Leaving Water Temperature (ELWT) and high condenser temperatures causes high condenser pressures. The purpose of this limit is to avoid High Pressure Cutout (HPC) trips by allowing the Chiller to continue to run at a lower load instead of tripping off via HPC.

The Condenser Limit will be based from a pressure conversion from the Condenser Refrigerant Temperature sensor, unless there is a Condenser Refrigerant Pressure sensor installed (CDRP option). If the Condenser Refrigerant Pressure Sensor is installed, then the limit will be based from the Pressure sensor.

When limited by this action, "Condenser Pressure Limit" will be displayed as a sub-operating mode. The Condenser Limit Setpoint is factory set (93 percent of HPC), however can be altered via the service tool.

Machine Protection and Adaptive Control

Restart Inhibit.

This function provides short cycle protection for the motor, and indirectly also short cycling protection for the starter since the starter is designed to operate the motor under all the conditions of motor performance.

The operation of the restart inhibit function is dependent upon two setpoints. The Restart Inhibit Free Starts (1-5, 3 default), and the Restart Inhibit Start to Start Timer (10-30 min, 20 default). These settings are adjustable via the service tool.

Restart Inhibit Free Starts

This setting will allow a number of rapid restarts equal to its value. If the number of free starts is set to "1", this will allow only one start within the time period set by the Start to Start Time Setting. The next start will be allowed only after the start to start timer has expired. If the number of free starts is programmed to "3", the control will allow three starts in rapid succession, but thereafter, it would hold off on a compressor start until the Start to Start timer expired. i.e. with 3 free starts and 20 min. restart inhibit settings, it will take 60 minutes of run time to restore the total of 3 free starts.

Restart Inhibit Start to Start Time Setting

This setting defines the shortest chiller cycle period possible after the free starts have been used. If the number of free starts is programmed to "1", and the Start to Start Time Setting is programmed to 10 minutes, then the compressor will be allowed one start every 10 minutes. The start-to-start time is the time from when the motor was commanded to energize to when the next command to enter prestart is given.

Clear Restart Inhibit

A Clear Restart Inhibit "button" is provided within Settings; Manual Override on the DynaView display. This provides a way for an operator to allow a compressor start when there is a currently active Restart Inhibit that is prohibiting such a start. The "button" press will have no other function than to remove the restart inhibit if there is one active. It does not change the count of any internal restart inhibit timers or accumulators. command, but is inhibited, pending the expiration of the timer.

The restart inhibit function, setpoints and clear features exist for each compressor and operate independently of other compressors on that chiller.

During the time the start is inhibited due to the start-to-start timer, the DynaView shall display the mode 'Restart Inhibit' and the also display the time remaining in the restart inhibit.

A "Restart Inhibit Invoked" warning diagnostic will exist when the attempted restart of a compressor is inhibited.

If all three motor winding temperatures are less than the "Restart Inhibit Temperature" Setpoint (default 165°F/74°C) then restart is allowed.

Restart inhibit mode exist when at least one of the three motor winding temperatures is greater than or equal to the "Restart Inhibit Temperature" Setpoint but less than 265°F/129.4°C. Restart inhibit mode is entered until all three motor winding temperatures are less than the 'Restart Inhibit Temperature' Setpoint

Note: When one of the three motor winding temperatures is 265°F/ 129.4°C or greater, a High Motor Winding Temperature diagnostic shall be called.

Note: When the start is inhibited by the restart inhibit function, the time remaining will be displayed along with the restart inhibit mode.

Machine Protection and Adaptive Control

High Vacuum Lockout
The oil sump pressure is below the lockout setpoint. Starting of compressor is inhibited as a result.

Low Oil Temperature Start Inhibit
The oil temperature is at or below the low oil temperature start inhibit setpoint (143°F/61.7°C). The heater is energized to raise the oil temperature.

Low oil temperature is indicative of refrigerant dilution in the oil. Oil temperature is used to estimate this dilution since the oil temperature directly corresponds to amount of refrigeration dilution in the oil. It is required that oil contains minimal refrigerant in it. This is accomplished by boiling the refrigerant out of the oil by maintaining a high enough oil temperature.

If the oil temperature is at or below a given Low Oil Temperature Inhibit setting (default 95°F/35°C) the compressor cannot be started. This is an inhibit mode and will be reported to the operator interface. The oil heater is energized in an attempt to raise the oil temperature over this inhibit temperature setpoint. The compressor is inhibited from starting until the oil temperature is raised 5 or more degrees above this setpoint.

The Low Oil Temperature Start Inhibit is tested on every start unless a quick restart is being performed during post lube.

If the Enhanced Oil Temperature Protection setting is enabled, the Low Oil Temperature Start Inhibit value is the greater of 100°F/37.8°C or the Saturated Evaporator Refrigerant Temperature + 30°F/16.7°C.

If the Enhanced Oil Temperature Protection setting is not enabled, the Low Oil Temperature Start Inhibit value is settable with the Low Oil Temperature Start Inhibit Setpoint via the service tool.

Machine Protection and Adaptive Control

Oil Temperature Control
The oil heater is used to maintain the oil temperature within +/- 2.5°F (1.4°C) of the oil temperature control setpoint. The oil heater is commanded off when the oil pump is commanded on.

If the oil temperature is at or below the Low Oil Temperature Cutout setpoint, this diagnostic will be issued and stops the compressor.

This diagnostic is ignored for the first 10 minutes of compressor run. After that, if the oil temperature falls below this cutout temperature for more than 60 consecutive seconds this diagnostic is issued.

High Oil Temperature Cutout
Name: High Oil Temperature Cutout
Type of Diagnostic: Latching, results in Immediate Shutdown.
Default Setpoint value: 180°F (82.2°C)

Implemented to avoid overheating of the oil and the bearings.

If the oil temperature is at or above the High Oil Temperature Cutout setpoint this diagnostic will be issued - which will stop the compressor.

If Oil Temperature violates this temperature cutout for more than 120 seconds this diagnostic is issued.

Manual Oil Pump Control
The oil pump control accepts commands to turn on the oil pump. The manual oil pump choices will be "Auto" or "On". When the oil pump is commanded "On", it will revert to "Auto" in 15 minutes.

Machine Protection and Adaptive Control

Controls Chilled Water Reset (CWR)

Chilled water reset is designed for those applications where the design chilled water temperature is not required at partload. In these cases, the leaving chilled water temperature setpoint can be reset upward using the CWR features.

When the CWR function is based on return water temperature, the CWR feature is standard.

When the CWR function is based on outdoor air temperature, the CWR feature is an option requiring an outdoor temperature sensor module installed in the UCP panel, and sensor installed outdoors.

The type of CWR is selected in the Operator Interface settings Menu along with the Reset Ratio, Start Reset Setpoint, and the Maximum Reset Setpoint.

The following equations and parameters apply for CWR.

Return Water

CWS' = CWS + RATIO (START RESET - TWE - TWL) and CWS' > or = CWS and CWS' - CWS < or = *Maximum Reset.*

Outdoor Air Temperature

CWS = CWS + RATIO (START RESET - TOD) and CWS' > or = CWS and CWS - CWS < or = Maximum Reset.

Where

CWS' is the new chilled water setpoint.

CWS is the active chilled water setpoint before any reset has occurred.

RESET RATIO is a user adjustable gain.

START RESET is a user adjustable reference.

TOD is the Temperature Outdoor Sensor.

TWE is entering evaporator water temperature.

TWL is the Leaving Evaporator Temperature.

MAXIMUM RESET is a user adjustable limit providing the maximum amount of reset. For all types of reset, CWS - CWS < or = Maximum Reset.

Both Return and Outdoor Reset do not apply to Heating Mode where the UCP is controlling the Leaving Condensing Hot Water Temperature.

Constant Return Reset will reset the leaving water temperature setpoint so as to provide a constant entering water temperature. The Constant Return Reset equation is the same as the Return Reset equation except on selection of Constant Return Reset, the UCP shall automatically set RATIO, START RESET, and MAXIMUM RESET to the following:

The RATIO = 100 percent
The START RESET = Design Delta Temperature
The MAXIMUM RESET = Design Delta Temperature

The equation for Constant Return is as follows:

Machine Protection and Adaptive Control

Table 3. Values for start reset types

The values for "RESET TYPE" are:

Reset Type:	Disable	Outdoor Air Reset	Return Reset	Const Return Reset

The values for "RESET RATIO" for each of the reset types are:

Reset Type	Reset Ratio Range	Increment English Units	Increment SI Units	Factory Default Value
Return	10 to 120 percent	1 percent	1 percent	50 percent
Outdoor	-80 to 80 percent	1 percent	1 percent	10 percent

The values for "START RESET " for each of the reset types are:

Reset Type	Start Reset Range	Increment English Units	Increment SI Units	Factory Default Value
Return	4 to 30°F (2.2 to 16.7°C)	0.1°F	0.1°C	10°F (5.6°C)
Outdoor	50 to 130°F (10 to 54.44°C)	0.1°F	0.1°C	90°F (32.22°C)

The values for "MAXIMUM RESET" for each of the reset types are:

Reset	Maximum Reset Range	Increment English Units	Increment SI Units	Factory Default Value
Return	0 to 20°F (0.0 to 11.11°C)	0.1°F	0.1°C	5°F (2.78°C)
Outdoor	0 to 20°F (0.2 to 11.11°C)	0.1°F	0.1°C	5°F (2.78°C)

Constant Return

CWS' = CWS + 100 percent (Design Delta Temperature) - (TWE-TWL) and CWS' > or = CWS and CWS' -CWS < or = Maximum Reset

Notice that Constant Return is nothing more than a specific case of Return Reset offered for operator convenience.

When any type of CWR is enabled, the UCP will step the CWS toward the desired CWS (based on the above equations and setup parameters) at a rate of 1°F every 5 minutes until the Active CWS equals the desired CWS'. This applies when the chiller is running only.

Using the Equation for calculating CWR for Outdoor Air Temperature

Equation:
Degrees of Reset = Reset Ratio*(Start Reset - TOD)

The chiller will start at the Differential to Start value above a fully reset CWS or CWS for both Return and Outdoor Reset.

The graph on the next page, shows the reset function for Outdoor Air Temperature: **Note:** This graph assumes that Maximum Reset is set to 20 degrees.

Degrees of Reset:
Degrees of Reset = Active CWS - Front Panel CWS
or
Degrees of Reset = CWS' - CWS

To obtain Active CWS from Degrees of Reset: Active CWS = Degrees of Reset + Front Panel CWS

(* = multiply)

Machine Protection and Adaptive Control

Reset Ratio:
The Reset Ratio is displayed as a percentage. To use it in the above equation it must be converted to it's decimal form.

Reset Ratio percent /100 = Reset Ratio decimal

Example of converting Reset Ratio:

If the Reset Ratio displayed on the CLD is 50 percent then use (50/100)= .5 in the equation

TOD = Outdoor Air Temperature

Start Reset = Outdoor Air Start Reset

Example of Calculating Reset for Outdoor Air Temperature:

If:
Reset Ratio = 35 percent
Start Reset = 80
TOD = 65
Maximum Reset = 10.5

How many Degrees of Reset will there be?

Degrees of Reset = Reset Ratio*(Start Reset - TOD)
Degrees of Reset = .35*(80-65)
Degrees of Reset = 5.25

If:
Reset Ratio = -70 percent
Start Reset = 90
TOD = 100
Maximum Reset = 17

How many Degrees of Reset will there be?

Degrees of Reset = Reset Ratio* (Start Reset - TOD)
Degrees of Reset = -7* (90-100)
Degrees of Reset = 7

(* = multiply)

Figure 28. Outdoor air temperature versus degrees of reset

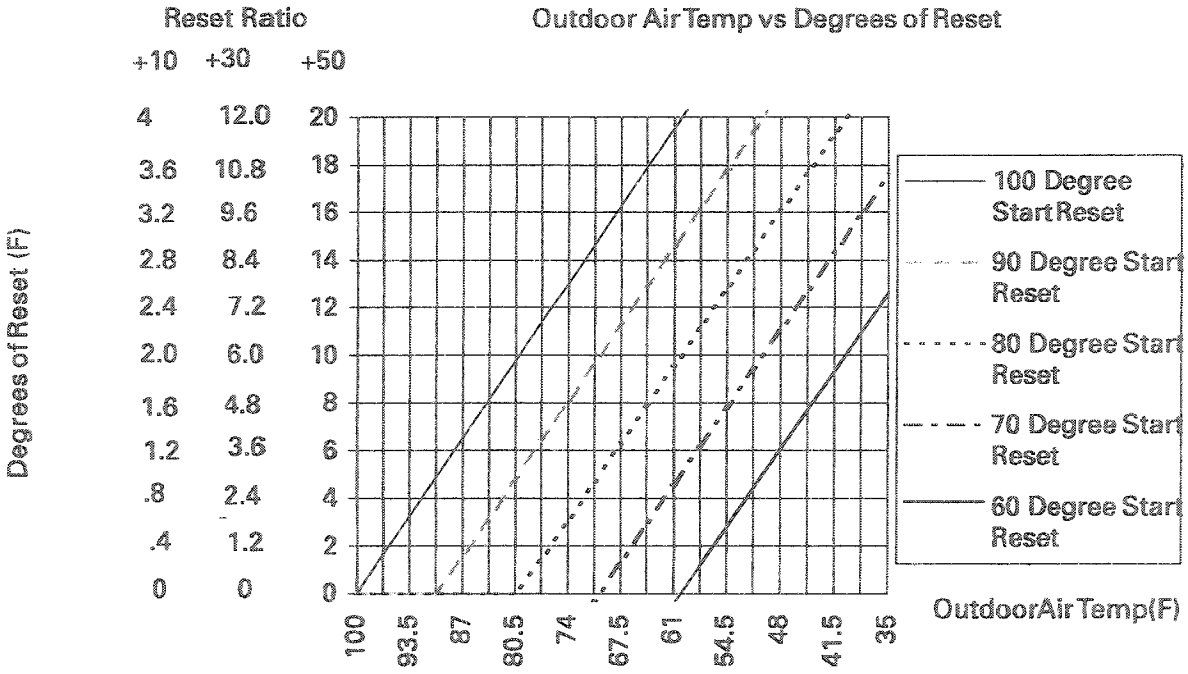

Machine Protection and Adaptive Control

Figure 29. Reset function for return CWR

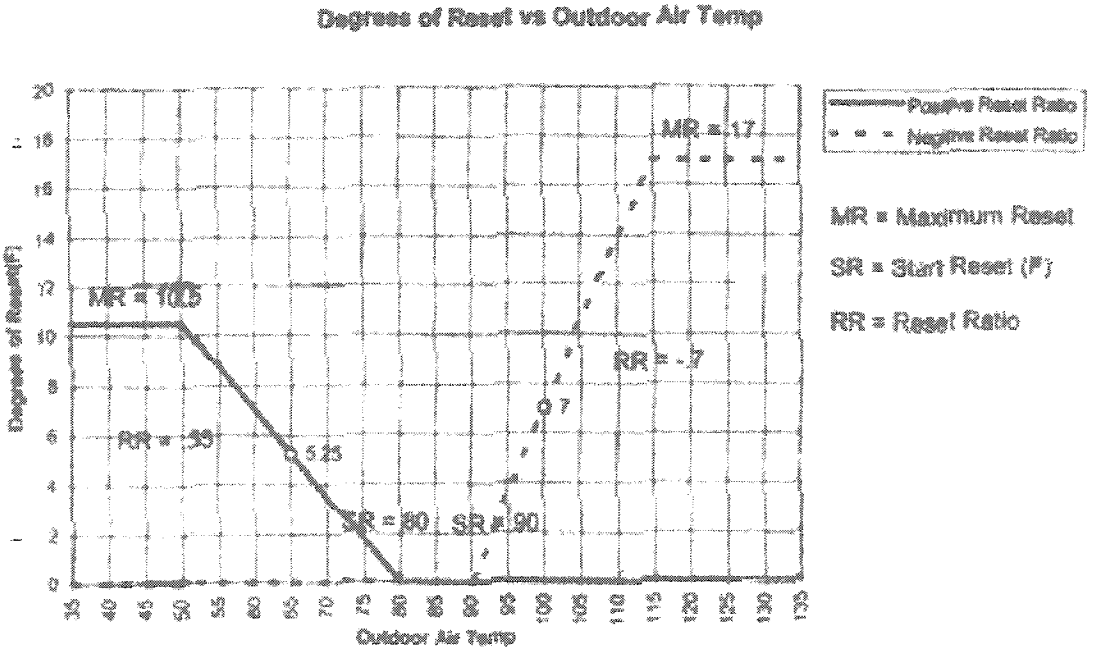

Figure 30. Reset function for return CWR

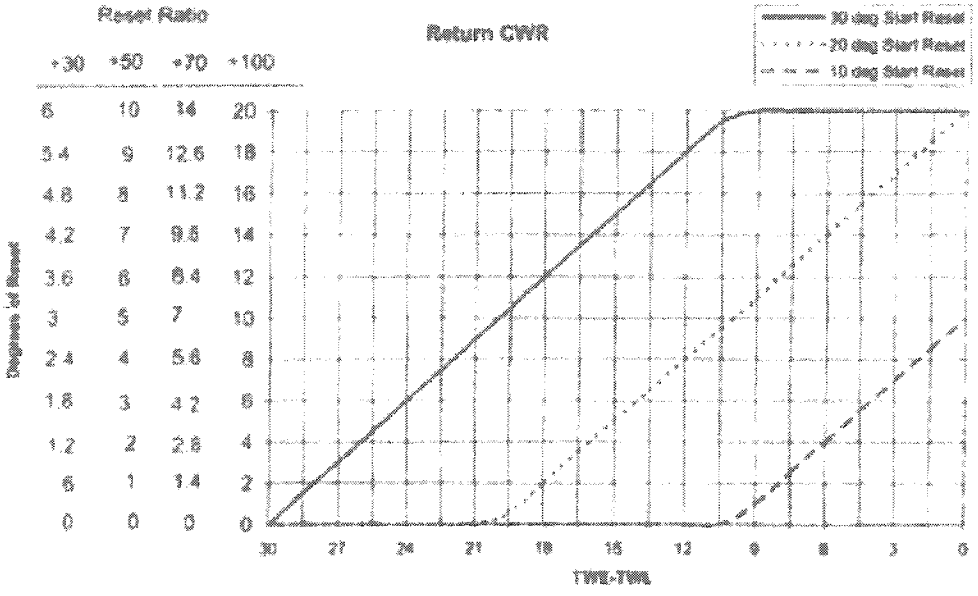

Note: This graph assumes Maximum Reset is set to 20 degrees.

Machine Protection and Adaptive Control

Example of Calculating Return Reset:

If:
Reset Ratio = 50%
Start Reset = 25
TWE = 65
TWL = 45
Maximum Reset = 8

How many Degrees of Reset will there be?

Degrees of Reset = Reset Ratio*(Start Reset - (TWE-TWL))
Degrees of Reset = .5*(25-(65-45))
Degrees of Reset = 2.5

If:
Reset Ratio = 70%
Start Reset = 20
TWE = 60
TWL = 53
Maximum Reset = 14

How many Degrees of Reset will there be?

Degrees of Reset = Reset Ratio*(Start Reset - (TWE-TWL))
Degrees of Reset = .7*(20-(60-53))
Degrees of Reset = 9.1

Machine Protection and Adaptive Control

Figure 31. Return CWR

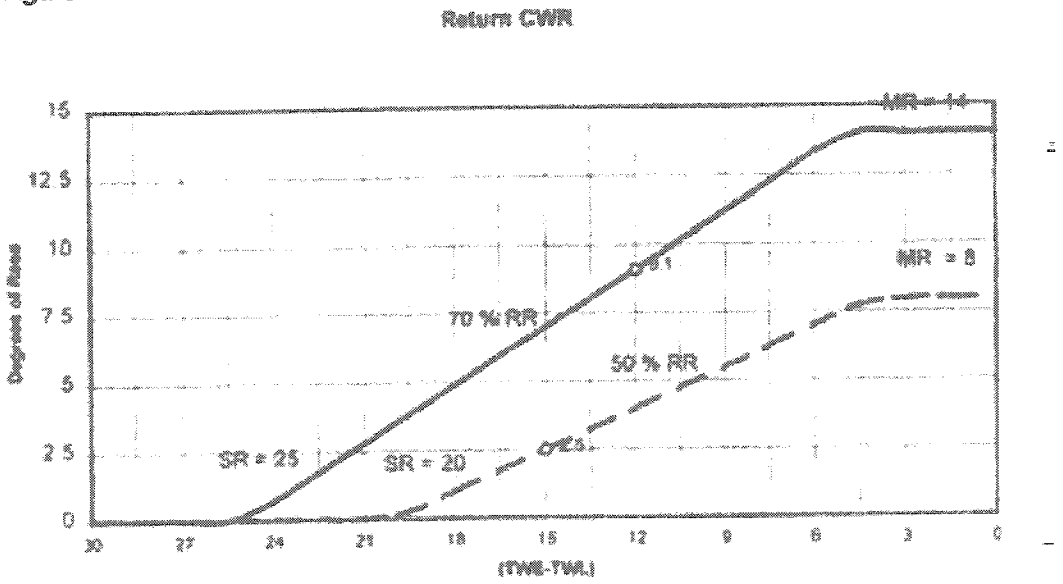

Figure 32. Constant CWR

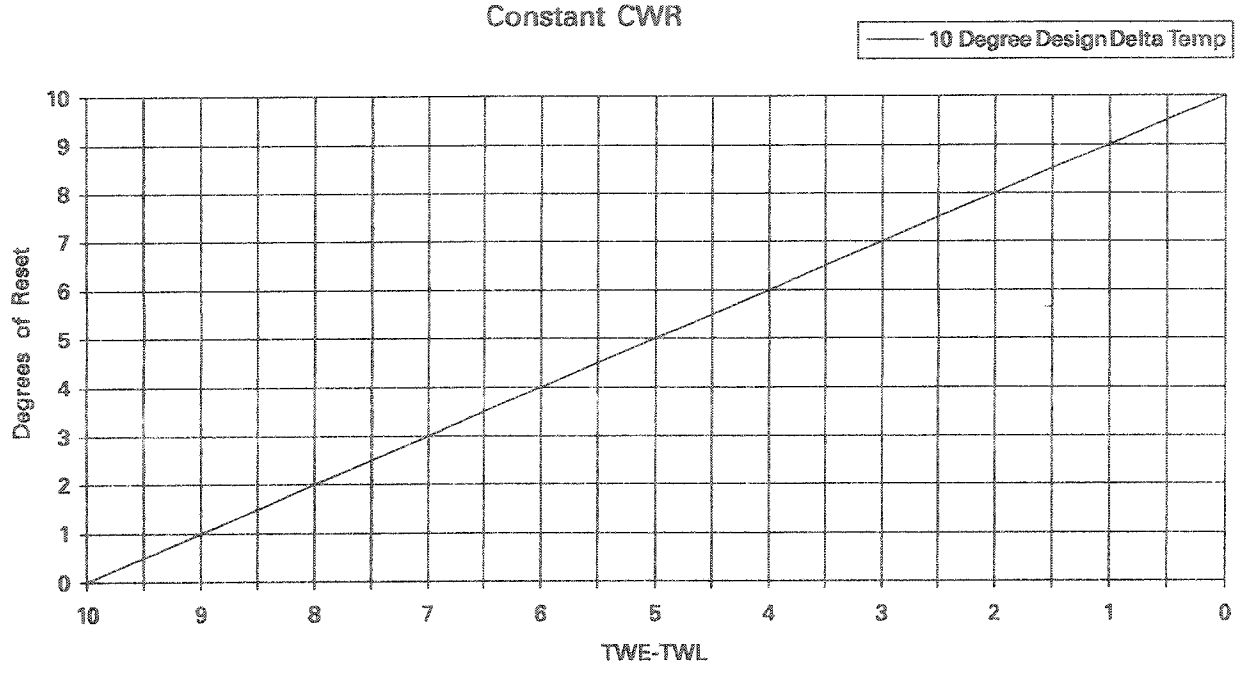

Unit Startup

Unit Start-Up Procedures

Daily Unit Start-Up

1. Verify the chilled water pump and condenser water pump starter are in "ON" or "AUTO".
2. Verify the cooling tower is in "ON" or "AUTO".
3. Check the oil tank oil level; the level must be visible in or above the lower sight glass. Also, be sure to check the oil tank temperature; normal oil tank temperature before start-up is 140°F to 145°F (60 to 63°C).

Note: The oil heater is energized during the compressor off cycle. During unit operation, the oil tank heater is de-energized.

4. If the chiller is equipped with the free cooling option, ensure that the free cooling option is disabled in the Chiller Settings menu.
5. Check the chilled water setpoint and readjust it, if necessary, in the Chiller Settings menu.
6. If necessary, readjust the current limit setpoint in the Chiller Setpoints menu.
7. Press "AUTO".

The UCP also checks compressor motor winding temperature, and a start is initiated if the winding temperature is less than 265°F. The chilled water pump relay is energized and evaporator water flow is proven.

Next, the UCP checks the leaving evaporator water temperature and compares it to the chilled water setpoint. If the difference between these values is less than the start differential setpoint, cooling is not needed.

If the UCP determines that the difference between the evaporator leaving water temperature and chilled water setpoint exceeds the start differential setpoint, the unit enters the initiate Start Mode and the oil pump and Refrigerant pump and the condenser water pump are started. If condenser water flow is not proven (flow switch 5S3 does not close) within 4-minutes 15 seconds, the unit is locked out on a MMR Diagnostic.

Oil pressure must be verified within 3 minutes or a MMR diagnostic is generated.

When less than 5 seconds remain on the restart inhibit, the pre-start starter test is conducted on Y-Delta starters. If faults are detected, the unit's compressor will not start, and a MMR Diagnostic will be generated.

If the compressor motor starts and accelerates successfully, "Unit is Running" appears on the display. At this time the purge unit will start operating on "Automatic" and will continue to operate as long as chiller compressor is running.

Note: Whenever the UCP detects a MMR diagnostic condition during start-up, unit operation is locked out, and manual reset is required before the start-up sequence can begin again. If the fault condition has not cleared, the UCP will not permit restart.

Unit Startup

When the cooling requirement is satisfied, the UCP originates a "Shutting down" signal. The inlet guide vanes are driven closed for 50 seconds, and the unit enters a 3-minute post-lube period. The compressor motor and condenser water pump starter are de-energized immediately, but the oil pump continues to run during this 3-minute interval; the evaporator pump will continue to run.

Once the post-lube cycle is done, the unit returns to auto mode.

Seasonal Unit Start-Up

1. Close all drain valves, and re-install the drain plugs in the evaporator and condenser headers.
2. Service the auxiliary equipment according to the start-up and maintenance instructions provided by the respective equipment manufacturers.
3. Vent and fill the cooling tower, if used, as well as the condenser and piping. At this point, all air must be removed from the system (including each pass). Then close the vents in the condenser water boxes.
4. Open all of the valves in the evaporator chilled water circuit.
5. If the evaporator was previously drained, vent and fill the evaporator and chilled water circuit. When all air is removed from the system (including each pass), close the vent valves in the evaporator water boxes.
6. Lubricate the external vane control linkage as needed.
7. Check the adjustment and operation of each safety and operating control.
8. Close all disconnect switches.
9. Perform instructions listed in "Daily Unit Start-up" section.

⚠ WARNING

Live Electrical Components!

During installation, testing, servicing and troubleshooting of this product, it may be necessary to work with live electrical components. Have a qualified licensed electrician or other individual who has been properly trained in handling live electrical components perform these tasks. Failure to follow all electrical safety precautions when exposed to live electrical components could result in death or serious injury.

⚠ WARNING

Toxic Hazards!

- **Do not run evaporator water pump longer than 30 minutes after the chiller is shutdown.**
- **Ensure that the evaporator is isolated from the hot water loop before changeover to heating mode.**

Do not allow the chiller to increase above 110°F in temperature while unit is off. Failure to prevent high chiller temperature will cause the inside pressure to rise. The rupture disk is designed to relieve and discharge the refrigerant from the unit if the pressure in the evaporator exceeds 15 PSIG (103.4 Kpa). A significant release of refrigerant into a confined space due to a rupture disk failure could displace available oxygen to breathe and cause possible asphyxiation. Should a rupture disk fail, evacuate the area immediately and contact the appropriate rescue or response authority. Failure to take appropriate precautions or react properly to a potential hazard could result in death or serious injury.

Unit Shutdown

Unit Shutdown Procedures

Daily Unit Shutdown

Note: Refer to Start-Run Shutdown sequence in General Information Overview Sequence of Operation.

1. Press STOP.
2. After compressor and water pumps shutdown turn Pump Contactors to OFF or open pump disconnects.

Seasonal Unit Shutdown

CAUTION

Oil Pump Heater Operation!

CONTROL POWER DISCONNECT SWITCH MUST REMAIN CLOSED TO ALLOW OIL SUMP HEATER OPERATION. Failure to do this will allow refrigerant to condense in the oil pump.

3. Open all disconnect switches except the control power disconnect switch.
4. Drain the condenser piping and cooling tower, if used. Rinse with clean water.
5. Remove the drain and vent plugs from the condenser headers to drain the condenser. Air dry bundle of residual water.
6. Once the unit is secured for winter, the maintenance procedures described under "Annual Maintenance" in the Periodic Maintenance section of this manual should be performed by qualified Trane service technicians.

Note: During extended shutdown, be sure to operate the purge unit for a 2-hour period every two weeks. This will prevent the accumulation of air and noncompensable in the machine. To start the purge, change the purge mode to ON in the DynaView™ Settings Purge Menu. Remember to turn the purge mode to Adaptive after the 2-hour run time.

Trouble Analysis

If the ALARM indicator on the control panel is flashing, an MMR diagnostic has occurred. Refer to Diagnostic section for trouble shooting information. (page 35)

Periodic Maintenance

Overview

This section describes the basic chiller preventive maintenance procedures, and recommends the intervals at which these procedures should be performed. Use of a periodic maintenance program is important to ensure the best possible performance and efficiency from a CenTraVac® chiller.

Recommended purge maintenance procedures for the Purifier Purge unit are covered by PRGD-SVU01A-EN or the latest revision which can be obtained at the nearest Trane office.

Record Keeping Forms

An important aspect of the chiller maintenance program is the regular completion of records. Provided at the end of this manual are copies of the "Annual Inspection Check List and Report", "CenTraVac with UCP Commissioning Checklist and "Start-Up Test Log", a "Start-Up Test Log for Water Cooled CenTraVacs with UCP Control Panels" and "UCP "Settings Group" Menu Record". When filled out accurately by the machine operator, the completed logs can be reviewed to identify any developing trends in the chiller's operating conditions.

For example, if the machine operator notices a gradual increase in condensing pressure during a month's time, he can systematically check, then correct the possible cause(s) of this condition (fouled condenser tubes, noncondensable in the system, etcetera)

Daily Maintenance and Checks

[ ] Check the chiller's evaporator and condenser pressures, oil tank pressure, differential oil pressure and discharge oil pressure. Compare the readings with the values provided in the Normal Chiller Operating Characteristics table.

IMPORTANT: IT IS HIGHLY RECOMMENDED THAT THE OPERATING LOG BE COMPLETED ON A DAILY BASIS.

CAUTION

Moisture Contamination!

IF FREQUENT PURGING IS REQUIRED, MONITOR PURGE PUMPOUT RATE, IDENTIFY AND CORRECT SOURCE OF AIR OR WATER LEAK AS SOON AS POSSIBLE. Failure to do so can shorten chiller life expectancy, due to moisture contamination caused by leakage.

[ ] Check the oil level in the chiller oil sump using the two sight glasses provided in the oil sump head. When the unit is operating, the oil level should be visible in the lower sight glass.

Periodic Maintenance

⚠ WARNING

Hazardous Voltage w/ Capacitors!

Disconnect all electric power, including remote disconnects before servicing. Follow proper lockout/ tagout procedures to ensure the power cannot be inadvertently energized. For variable frequency drives or other energy storing components provided by Trane or others, refer to the appropriate manufacturer's literature for allowable waiting periods for discharge of capacitors. Verify with an appropriate voltmeter that all capacitors have discharged. Failure to disconnect power and discharge capacitors before servicing could result in death or serious injury.

Note: For additional information regarding the safe discharge of capacitors, see PROD-SVB06A-EN or PROD-SVB06A-FR

Weekly Maintenance

[ ] Complete all recommended daily maintenance procedures and checks. Complete logs on a daily basis.

Every 3 Months

[ ] Complete all recommended weekly maintenance procedures. Refer to the previous sections for details.

[ ] Clean all water strainers in the CenTraVac water piping system.

Every 6 Months

Normal Chiller Operating Characteristics

Operating Characteristic	Normal Reading
Approx. Evaporator Pressure	(6 to 9 PSIA) (-9 to -6 PSIG)
Approx. Condenser Pressure	(17 TO 27 PSIA) 2 to 12 PSIG (Standard Condensers)
Oil Sump Temperature:	
Unit Not Running	140°F to 145°F (60°C to 63°C)
Unit Running	80°F to 162°F (26.6°C to 72°C)
Differential Oil Pressure	18 to 22 psid

Notes:
1. Condenser pressure is dependent on condenser water temperature, and should equal the saturation pressure of HCFC-123 at a temperature above that of leaving condenser water at full load.
2. Normal pressure readings for ASME condensers exceed 12 PSIG.
3. Oil Tank Pressure 12" to 18" HG Discharge Oil Pressure 7 to 15 PSIG.

Periodic Maintenance

[ ] Complete all recommended quarterly maintenance procedures.

[ ] Lubricate the vane control linkage bearings, ball joints, and pivot points; as needed a few drops of light machine oil (SAE-20) is sufficient.

[ ] Lubricate vane operator tang o-rings as described in the maintenance section.

[ ] Lubricate the oil filter shutoff valve o-rings by removing the pipe plug and adding several drops of Trane OIL00022. Replace plug.

[ ] Drain the contents of the rupture disc and purge discharge ventline drip-leg, into an evacuated waste container minimally and more often if the purge is operated excessively.

Also, apply one or two drops of oil on the vane operator shaft and spread it into a very light film; this will protect the shaft from moisture and rust.

Off-Season Maintenance

During those periods of time when the chiller is not operated, be sure the control panel is energized. This is to keep the purge operational, the oil heater warm and will also keep air out of the machine.

Annual Maintenance

Shut down the chiller once each year to check the items listed ; a more detailed inspection checklist is provided on the "Model CVHE, CVHF and CVHG CenTraVac Annual Inspection Checklist and Report" illustrated in this manual.

[ ] Perform the annual maintenance procedures referred to in the Maintenance Section of the purge manual.

[ ] Use an ice water bath to verify that the accuracy of the evaporator refrigerant temperature sensor (4R10) is still within tolerance (+ or - 2.0° at 32°F (1° at 0°C)). If the evaporator refrigerant temperature displayed on the UCP's read-out is outside this 4-degree tolerance range, replace the sensor.

Note: If the sensor is exposed to temperature extremes outside its normal operating range (0°F to 90°F) (-18°C to 32°C), check its accuracy at six-month intervals.

Oil Maintenance

Compressor Oil Change on CVHE, CVHF, CVHG

Recommendations are to subscribe to an annual oil analysis program rather than automatically change the oil as part of scheduled maintenance. Change the oil only if indicated by the oil analysis. Use of an oil analysis program will reduce the chillers overall lifetime waste oil generation and minimize refrigerant emissions. The oil analysis should be performed by a qualified laboratory that is experienced in refrigerant and oil chemistry and in the servicing of Trane centrifugal chillers.

In conjunction with other diagnostics performed by a qualified service technician, oil analyses can provide valuable information on the performance of the chiller to help minimize operating and maintenance costs and maximize it's operating life. A drain fitting is installed in the oil filter top, after the oil filter, for obtaining oil samples.

Note: Use only Trane OIL00022. A full oil change is 9 gallons of OIL00022.

Oil Change Procedure

When oil analysis indicates the need to change compressor oil, use the following procedure for removing oil.

CAUTION

Heater Damage!

The oil sump heater must be deenergized before draining the sump. Failure to do so could possibly burn out the oil sump heater.

[ ] Draw the oil from the chiller through the oil charging valve on the chiller oil sump into an approved, evacuated tank; or,

[ ] Pump the oil from the chiller through the oil charging valve into an airtight resealable container, using a magnetically-driven auxiliary pump.

Forcing the oil from the oil sump by pressurizing the chiller (by raising chiller temperature or adding nitrogen) is not recommended.

Refrigerant dissolved in the oil can be removed and returned to the chiller by using an appropriate deep-vacuum recovery unit and heating and agitating the oil container. Follow all Federal, State and Local regulations with regard to disposal of waste oil.

Oil Maintenance

Replacing Oil Filter

Replace oil filter: (1) annually, (2) at each oil change, (3) or if erratic oil pressure is experienced during chiller operation.

Oil Filter Replacement

Use the following procedure to service the oil filter. Refer to Figure 34.

1. Run the oil pump for two to three minutes to insure that the oil filter is warmed up to the oil sump temperature.
2. Turn the oil pump motor off.
3. Pull the "D" handle on the rotary valve locking pin out of its detent and rotate the valve to the "DRAIN" position. An offset pointer is located on top of the valve with wrench flats to allow turning. The spring force on the locking pin should allow the pin to drop into a detent at this position.
4. Allow at least 15 minutes for the oil to drain from the filter back into the oil sump.
5. Pull the "D" handle to unlock the pin and rotate the valve to the "Change Filter" position. This isolates the filter from the unit. The locking pin should drop into a detent in this position.
6. Remove and replace the filter as quickly as possible. Tighten filter 2/3 to 3/4 turn per instructions written on the filter. Place the used filter in a reusable container. Follow all local, state and federal regulations to dispose of the filter. Pull the "D" handle to unlock the pin and rotate the valve to the "RUN" position. The locking pin should drop into a detent in this position. The chiller is now ready for operation.
7. Purge unit.
8. Check oil pressure 18-27 psi.

Maintenance

Other Maintenance Requirements

Compressors using new seal technology will not use O-rings. The O-ring has been replaced by Loctite 515 applied at a minimum film thickness of .010 applied across the width of the flange. The current jack bolt holes remain for disassembly.

CAUTION

Oil Supply System Problems!

Plugging of oil supply system could lead to bearing failure. Failure to use care could result in Loctite getting into the chiller which may cause problems with the Oil supply system and eductor system.

[ ] Inspect the condenser tubes for fouling; clean if necessary.

⚠ WARNING

Hazardous Voltage w/ Capacitors!

Disconnect all electric power, including remote disconnects before servicing. Follow proper lockout/ tagout procedures to ensure the power cannot be inadvertently energized. For variable frequency drives or other energy storing components provided by Trane or others, refer to the appropriate manufacturer's literature for allowable waiting periods for discharge of capacitors. Verify with an appropriate voltmeter that all capacitors have discharged. Failure to disconnect power and discharge capacitors before servicing could result in death or serious injury. Note: For additional information regarding the safe discharge of capacitors, see PROD-SVB06A-EN or PROD-SVB06A-FR

[ ] Measure the compressor motor winding resistance to ground; a qualified service technician should conduct this check to ensure that the findings are properly interpreted.

Contact a qualified service organization to leak-test the chiller; this procedure is especially important if the system requires frequent purging.

[ ] Use a nondestructive tube test to inspect the condenser and evaporator tubes at 3-year intervals.

Note: It may be desirable to perform tube tests on these components at more frequent intervals, depending upon chiller application. This is especially true of critical process equipment.

[ ] Depending on chiller duty, contact a qualified service organization to determine when to conduct a complete examination of the unit to discern the condition of the compressor and internal components.

Note: (a) Chronic air leaks, which can cause acidic conditions in the compressor oil and result in premature bearing wear; and, (b) Evaporator or condenser water tube leaks. Water mixed with the compressor oil can result in bearing pitting, corrosion, or excessive wear.

[ ] Submit a sample of the compressor oil to a Trane qualified laboratory for comprehensive analysis on an annual basis; this analysis determines system moisture content, acid level and wear metal content of the oil, and can be used as a diagnostic tool.

Lubrication

The only CVHE, CVHF and CVHG chiller component that requires periodic lubrication is the external vane linkage assembly and Rotary oil valve.

Lubricate the vane linkage shaft bearings and rod end bearings as needed with a few drops of light-weight machine oil.

The CenTraVac inlet guide vane tang operators should be serviced annually with R123 compatible grease. Use only Rheolube 734A, available from Trane as LUB00033 (16oz. standard grease gun cartridge) or LUB00063 (3oz. mini grease gun cartridge)

To service the 1st stage tang operator of all units except CVHF extended capacity chillers with 1470 or 1720 compressors.

1. The chiller must be off.
2. Carefully remove any insulation that may have been placed over the two lubrication ports of the tang operator base. This insulation will need to be replaced after the service is complete.
3. Note the position of the tang operator arm, note the placement of spacing washers etc., then disconnect the linkage rod from the tang operator arm. Manually move the tang operator arm and note the amount of effort required to operate the assembly.
4. Loosen but DO NOT REMOVE the 1/16" NPT lubrication port plug that is highest on the assembly.
5. Loosen and remove the remaining lower 1/16" NPT plug.
6. Using a grease gun with an appropriate fitting, insert ONLY Rheolube grease into the open port until clean grease is seen to appear around the threads of the plug in the opposite port.
7. Tighten the plug that was loosened in step 4. Tighten the plug to hand tight plus 1/4 to 1/2 turn.
8. Remove the grease fitting, if used.

Maintenance

DO NOT LEAVE GREASE FITTINGS INSTALLED.
If grease fittings have been used for this procedure then they MUST BE REMOVED before returning the unit to service. Grease fittings are not vacuum-tight and will become a leak path.

9. Using a clean wooden dowel or other similar tool, remove excess grease from the remaining open lubrication port.
10. Clean and then lightly coat the threads of the plug with Rheolube grease and re-install it into the lubrication port. Tighten the plug to hand tight plus 1/4 to 1/2 turn.
11. Before reconnecting the vane linkage, grasp the tang operator arm and manually operate the vane assembly. If it is now difficult to move, then the tang operator may have become "hydraulically locked" because of excess grease in the assembly. This situation could cause damage to the o-rings of the assembly. If this occurs then remove one of the lubrication plugs, remove some of the grease, then re-install the plug.
12. Reconnect the linkage to the tang operator arm. Ensure the spacer washers between the linkage and the arm are properly placed and that the assembly does not bind. Re-install any insulation that was cut or removed. The unit may be restarted.

To service the 1st and 2nd stage tang operators on CVHF and CDHF extended capacity chillers with 1470 or 1720 compressors.
The 1st and 2nd stage rotary inlet guide vane tang operators of the extended capacity chillers also require periodic lubrication, at least annually, with R123 compatible Rheolube grease. These actuators have two 1/8" NPT plugs located 180 degrees apart, with one on the top and the other on the bottom of the operator base. Use the same procedure as described above, except that it will be necessary to temporarily disconnect the vane actuators from the tang operator arms in order to test for a "hydraulically locked" condition.

The oil valve block rotary valve uses dual O-Rings to seal to atmosphere. These should be manually lubricated by removing the pipe plug at the valve lubrication port and placing a few drops of Trane OIL00022 in the cavity. Be sure to reinstall the pipe plug when lubrication is completed.

Figure 33. Rotary valve in drain position

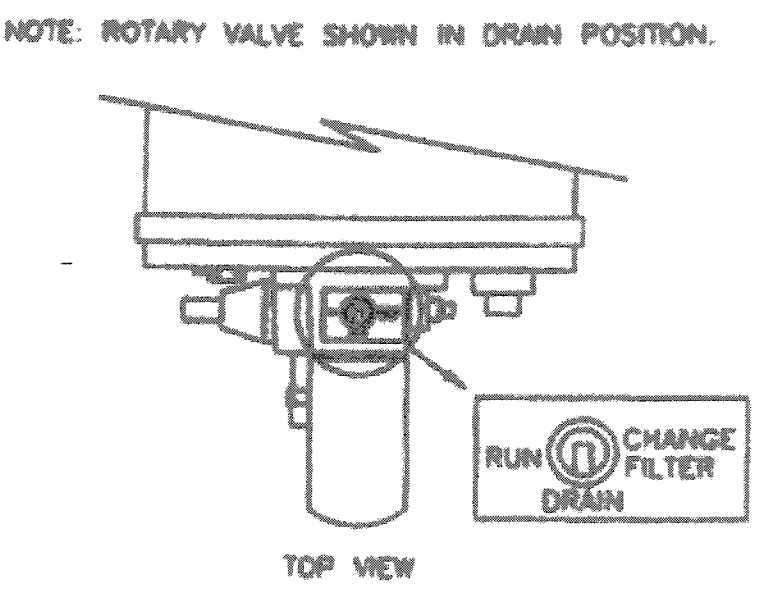

Front View with Refrigerant Pump

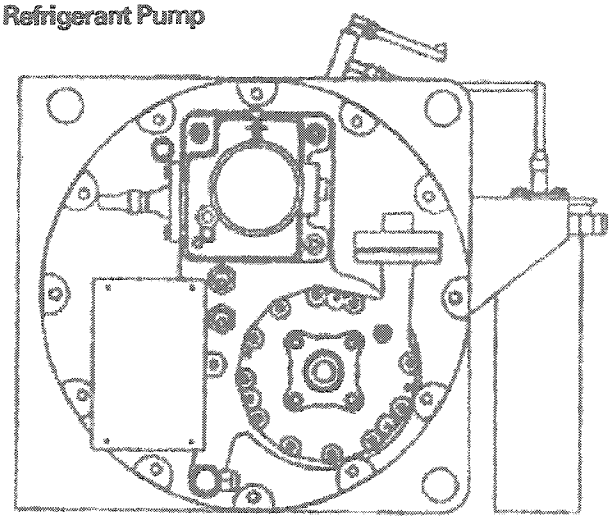

Maintenance

Refrigerant Charge

⚠ WARNING

Contains Refrigerant!

System contains oil and refrigerant and may be under positive pressure. Recover refrigerant to relieve pressure before opening the system. See unit nameplate for refrigerant type. Do not use non-approved refrigerants, refrigerant substitutes, or refrigerant additives.

Failure to follow proper procedures or the use of non-approved refrigerants, refrigerant substitutes, or refrigerant additives could result in death or serious injury or equipment damage.

The refrigerant charging procedure for Trane centrifugal chillers is:

1. If water is present in the tubes, break machine vacuum with refrigerant vapor, or circulate water, to avoid tube damage.
2. Always use refrigerant compatible hoses or copper-tubing with self-sealing connections or shut-off valves.
3. Transfer the refrigerant using one of the following (listed in order of preference):
   a. An approved Trane low-pressure refrigerant recovery and recycle unit.
   b. The available pressure differential.
   c. Gravity. (Use a return vent line to refrigerant drums to equalize pressure.)
5. Do not use dry nitrogen to push refrigerant into the chiller as was common practice in the past. This will contaminate the charge and require excessive purging, which will result in unnecessary release of refrigerant.
6. Weigh in the proper charge.
7. Use recovery and recyle unit or vacuum pump to evacuate hoses; discharge outdoors.
8. If refrigerant is supplied in new returnable cylinders, be sure and refer to General Service Bulletin CVHE-SB-48B for information on returning cylinders. This service bulletin is available at the nearest Trane office.

Depending on the chiller duty, contact a qualified service organization to determine when to conduct a complete examination of the unit to discern the condition of the compressor and internal components.

Note: If your chiller is covered by a Trane extended warranty, the terms of that warranty may require that the procedures listed in the Periodic Maintenance section of this manual be followed for your extended warranty to remain in force. The terms may also require that the chiller be inspected by a Trane authorized warranty agent every 4-years or 40,000 operating hours, whichever occurs first. This inspection will include, at a minimum, a review of the annual inspection checklists and the daily operating logs, as well as performance of a leak test and a general inspection of the chiller. The owner is then required to follow the recommendations made as a result of this inspection at the owners expense.

Maintenance

Recovery and Recycle Connections

To facilitate refrigerant removal and replacement, newer-design CVHE, CVHF and CVHG units are provided with a 3/4-inch vapor fitting with shutoff valve on the chiller suction and with a 3/4-inch liquid connection with shutoff valve at the bottom of the evaporator shell. (Refer to Refrigerant Handling Guidelines.)

Leak Testing

To leak-test a chiller containing full refrigerant charge, raise chiller pressure using a controlled hot water or electric-resistance system to a maximum of 8 psig. Do not use nitrogen, which will cause excessive refrigerant discharge by the purge system.

Cleaning the Condenser

CAUTION

Proper Water Treatment!

The use of untreated or improperly treated water in a CenTraVac may result in scaling, erosion, corrosion, algae or slime. It is recommended that the services of a qualified water treatment specialist be engaged to determine what water treatment, if any, is required. Trane assumes no responsibility for equipment failures which result from untreated or improperly treated water, or saline or brackish water.

See Figure 34 which shows a Typical Chemical Cleaning Setup.

Figure 34 - Typical Chemical Cleaning Setup

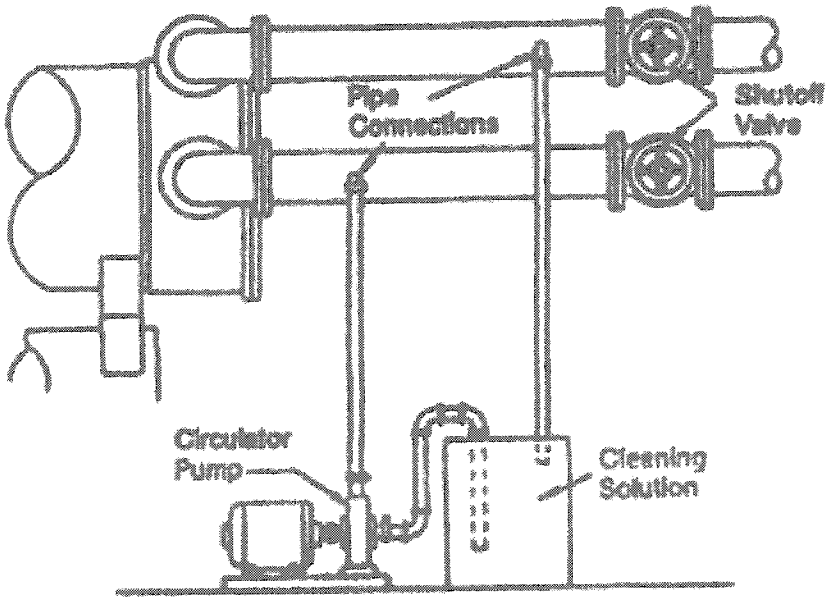

Maintenance

Condenser tube fouling is indicated when the approach temperature (the difference between the condensing refrigerant temperature and the leaving condenser water temperature) is higher than predicted.

If the annual condenser tube inspection indicates that the tubes are fouled, two cleaning methods, mechanical and chemical, can be used to rid the tubes of contaminants.

Use the mechanical cleaning method to remove sludge and loose material from smooth-bore tubes.

To clean other types of tubes including internally-enhanced types, consult a qualified service organization for recommendations.

1. Remove the retaining nuts and bolts from the water box covers at each end of the condenser. Use a hoist to lift the covers off the water box. (A threaded connection is provided on each water box cover to allow insertion of an eyebolt).
2. Work a round nylon or brass bristled brush (attached to a rod) in and out of each of the condenser water tubes to loosen the sludge.
3. Thoroughly flush the condenser water tubes with clean water.

Scale deposits may be best removed by chemical means. Be sure to consult a qualified chemical house in the area (one familiar with the local water supply's chemical mineral content) for a recommended cleaning solution suitable for the job. Remember, a standard condenser water circuit is composed solely of copper, cast iron and steel.

CAUTION

Unit Corrosion Damage!

Proper procedures must be followed when using corrosive chemicals to clean water side of unit. It is recommended that the services of a qualified chemical cleaning firm be used. Proper personal protective equipment as recommended by the chemical manufacturer should be used. Refer to the chemicals MSDS sheet for proper safety procedures. Failure to follow proper procedures could result in corrosion damage to the unit and tubes.

IMPORTANT: ALL OF THE MATERIALS USED IN THE EXTERNAL CIRCULATION SYSTEM, THE QUANTITY OF THE SOLUTION, THE DURATION OF THE CLEANING PERIOD, AND ANY REQUIRED SAFETY PRECAUTIONS SHOULD BE APPROVED BY THE COMPANY FURNISHING THE MATERIALS OR PERFORMING THE CLEANING.

REMEMBER, HOWEVER, THAT WHENEVER THE CHEMICAL TUBE CLEANING METHOD IS USED, IT MUST BE FOLLOWED UP WITH MECHANICAL TUBE CLEANING, FLUSHING AND INSPECTION.

Cleaning the Evaporator

Since the evaporator is typically part of a closed circuit, it does not accumulate appreciable amounts of scale or sludge. Normally, cleaning every 3 years is sufficient. However, on open CVHE, CVHF and CVHG systems, such as air washers, periodic inspection and cleaning is recommended.

Control Settings and Adjustments

Time delays and safety control cutout settings need to be checked annually. For control calibration and check-out, contact a Trane qualified service organization.

Maintenance

Purge System

Because some sections of the chiller's refrigeration system operate at less-than-atmospheric pressure, the possibility exists that air and moisture may leak into the system. If allowed to accumulate, these noncondensables become trapped in the condenser; this increases condensing pressure and compressor power requirements, and reduces the chiller's efficiency and cooling capacity.

The Trane EarthWise Purge is the only purge system available for the CVHE, CVHF and CVHG chiller. The purge is designed to remove noncondensable gases and water from the refrigeration system. EarthWise Purge unit operation, maintenance and trouble shooting is covered by a separate operation and maintenance manual, which may be obtained from the nearest Trane office.

Overview

This section describes extended storage requirements for UCP installed CVHE, CVHF and CVHG chillers to be removed from service for an undetermined length of time.

Unit Preparation

The following steps are necessary in order to properly prepare a unit for storage.

1. Remove all liquid refrigerant if the unit is charged.

⚠ WARNING

Contains Refrigerant!

System contains oil and refrigerant and may be under positive pressure. Recover refrigerant to relieve pressure before opening the system. See unit nameplate for refrigerant type. Do not use non-approved refrigerants, refrigerant substitutes, or refrigerant additives.

Failure to follow proper procedures or the use of non-approved refrigerants, refrigerant substitutes, or refrigerant additives could result in death or serious injury or equipment damage.

2. After the liquid refrigerant is removed, using a recovery or recycle unit or vacuum pump, pull a vacuum to remove remaining refrigerant vapor from the unit.
3. After all traces of refrigerant are out of the unit, a positive nitrogen charge should be put into the unit (6 to 8 psig). This positive pressure must be checked monthly to insure no noncondensables get into the unit. Use a pressure gage on the evaporator shell to verify that the 6 to 8 psig dry nitrogen holding charge is still in the chiller. If this charge has escaped, contact a qualified service organization and the Trane sales engineer that handled the order.
4. The refrigerant charge should be stored in proper refrigerant containers. Due to possible leakage, do not store in used drums.
5. Maintain control power to the control panel. This will maintain oil temperature in the oil sump and the capability of the control panel to present report information. The Chiller Reports should be viewed once a week for normal readings. Any abnormal observation must be reported to the Trane Sales Engineer that handled the order.

Maintenance

⚠ WARNING

Hazardous Voltage w/ Capacitors!

Disconnect all electric power, including remote disconnects before servicing. Follow proper lockout/ tagout procedures to ensure the power cannot be inadvertently energized. For variable frequency drives or other energy storing components provided by Trane or others, refer to the appropriate manufacturer's literature for allowable waiting periods for discharge of capacitors. Verify with an appropriate voltmeter that all capacitors have discharged. Failure to disconnect power and discharge capacitors before servicing could result in death or serious injury.

Note: For additional information regarding the safe discharge of capacitors, see PROD-SVB06A-EN or PROD-SVB06A-FR

6. Remove the factory installed jumper or the field installed wiring on terminals in the unit control panel. This will prevent unwanted chiller operation.
7. Set the purge operating mode to OFF on UCP chillers.
8. The oil can be left in the unit.
9. The water side should not cause a problem if shut down and drained. There may be slight scaling inside the tubes, but not enough to cause a problem. The customer should inspect and clean tubes before the unit is returned to service.

IMPORTANT: DO NOT USE UNTREATED OR IMPROPERLY TREATED WATER, OR EQUIPMENT DAMAGE MAY OCCUR.

IMPORTANT: SCALE DEPOSITS ARE BEST REMOVED BY CHEMICAL MEANS. BE SURE TO CONSULT ANY QUALIFIED CHEMICAL HOUSE IN THE AREA (ONE FAMILIAR WITH THE LOCAL WATER SUPPLY'S CHEMICAL MINERAL CONTENT) FOR A RECOMMENDED CLEANING SOLUTION SUITABLE FOR THE JOB.

10. Motor bearings: If the motor sits for a long time the bearings could take a set and cause bearing problems or replacement later. Once every six months the chiller oil pump must be started and the compressor motor bump started to rotate the shaft. Contact a qualified service organization to perform this task. If the compressor motor cannot be bump started, then the shaft must be rotated manually by a qualified service organization.
11. Obtain an oil analysis initially after six months of storage, and once each succeeding year. If no oil breakdown is evident do not change the oil. If breakdown is evident, the oil must be replaced.
12. If the unit is stored for more than five years, and the storage is expected to be indefinite, the unit should be examined for leaks every five years from the initial storage date.
13. When the unit is to be returned to service, the services of a qualified service organization should be obtained to conduct all activities associated with the startup of a new chiller.

CenTraVac®
Annual Inspection Check List and Report:

Compressor Motor

- ☐ Motor Continuity check
  Good ☐ Open ☐
- ☐ Check and tighten motor terminals
- ☐ Meg Motor
  Phase 1 ☐ Phase 2 ☐ Phase 3 ☐
- ☐ Check nameplate rating
  Amps ☐

Starter

- ☐ Check condition of starter contacts
  Good ☐ Fair ☐ Replace ☐
- ☐ Check, tighten if necessary all connections per manufactures specs

Oil Sump

- ☐ Change oil
  If oil analysis, refer to program procedure
- ☐ Gallons (9) required
- ☐ Refrigerant/Oil pump motor ground check
  Good ☐ Open ☐
- ☐ Check motor terminal
- ☐ Change oil filter

Condenser

- ☐ Visually inspect for scaling in tubes; not findings and make recommendations

Control Circuits

- ☐ Low refrigerant temperature sensor check
  ___°F set point ___°F trip point (ice water)
- ☐ Leaving Evaporator water temperature sensor check-out
  ___°F set point ___°F trip point (ice water)
- ☐ Condenser High Pressure Switch check-out
  ___psig set point
  ___psig trip point
- ☐ Check Net Oil Pressure
- ☐ Check adjustment and operation of inlet guide vane actuator stepper motor
  (Note: each machine is unique and must have the full open position number of steps input.)

Leak Test Chiller

- ☐ Refrigerant and oil analysis for acid content
- ☐ Sample refrigerant and oil for laboratory analysis (attach a copy of analysis to next monthly inspection report)

Purge Unit

- ☐ Review the purge operation maintenance manual and follow maintenance and/or inspection items identified.

Comments:

_____

_____

_____

_____

Recommendations:

_____

_____

_____

_____

CenTraVac®
Checksheet and Request for Serviceman

To: _____ Trane Service Company
S.O. No.: _____ Serial #s: _____
Job/Project Name: _____
Address: _____
The following items are being installed and will be completed by: _____
Check boxes if the task is complete or if the answer is "yes".

1. **CenTraVac**
   In place and piped. Do not insulate CenTraVac or adjacent piping. The contractor is responsible for any foreign material left in the unit. _____ ☐
2. **Piping**
   Chilled water piping connected to:
   - CenTraVac _____ ☐
   - Air handling units _____ ☐
   - Pumps _____ ☐

   Condenser and heat recovery condenser (as applicable) piping connected to:
   - CenTraVac _____ ☐
   - Pumps _____ ☐
   - Cooling tower _____ ☐
   - Heating loop (as applicable) _____ ☐

   Make-up water connected to cooling tower _____ ☐
   Water supply connected to filling system _____ ☐
   Systems filled _____ ☐
   Pumps run, air bled from system _____ ☐
   Strainers cleaned _____ ☐

3. **Flow Balancing Valves Installed**
   Leaving chilled water _____ ☐
   Leaving condenser water _____ ☐
   Heat recovery condenser leaving water _____ ☐

4. **Gauges, Thermometers and Air Vents**
   Installed on both sides of evaporator _____ ☐
   Installed on both sides of condenser and heat recover condenser (as applicable) _____ ☐

5. **Wiring**
   Compressor motor starter has been furnished by or approved by Trane La Crosse, WI _____ ☐
   Full Power available _____ ☐
   Interconnecting wiring, starter to panel (as req'd) ☐
   External interlocks (flow swtch, pumps aux, etc) ☐
   Chiller motor connection (remote starters)* _____ ☐
   Chilled water pump (connected and tested) _____ ☐
   Condenser water pump (connected and tested) ☐
   Cooling tower fan rotation checked _____ ☐
   Heat recovery condenser water pump (as applicable) _____ ☐
   Power available for Service tools 115 VAC _____ ☐
   All controls installed and connected _____ ☐
   All magnetic starters installed and connected _____ ☐

   *Note: Do not make final remote starter to compressor motor connections until requested to do so by the Trane Service representative.

6. **Testing**
   Dry nitrogen available for pressure testing _____ ☐
   Trace gas amounts of Refrigerant-22 or R-134a available for leak testing, if necessary _____ ☐

7. **Refrigerant On Job Site** _____ ☐

8. **Systems Can Be Operated Under Load Conditions** _____ ☐

9. **Electrical, Control Man and Contractor's Representative Are Available to Evacuate, Charge and Test the CenTraVac under Serviceman's Supervision** _____ ☐

10. **Equipment Room**
    Does the equipment room have a refrigerant monitor/sensor capable of monitoring and alarming within the allowable exposure level of the refirgerant? _____ ☐
    Does the installation have properly placed and operating audible and visual refrigerant alarms? _____ ☐

Continued on next page.....

10. Equipment Room (continued)

Does the equipment room have proper mechanical ventilation? _____ ■

If it is required by local code, is a self-contained breathing apparatus available? ■

11. Owner Awareness

Has the owner been fully instructed on the proper use of refrigerant HCFC-123? _____ ■

Does the owner have a copy of the MSDS for refrigerant HCFC-123? _____ ■

Was the owner given a copy of the Refrigerant Handling Guidelines? _____ ■

Note: Additional time required to properly complete the start-up and commissioning, due to any incompleteness of the of the installation, will be invoiced at prevailing rates.

This is to certify that the CenTraVac chiller(s) has/have been properly and completely installed, and that the applicable items listed above have been satisfactorily completed.

Checklist Completed By _____

Signed: _____ ***Date:*** _____

In accordance with your quotation and our purchase order number _____, we will therefore require the presence of Trane service on the site, for the purpose of start-up and commissioning, by: Date: _____

Note: Advance notification is required to allow scheduling of the start-up as close as possible to the requested date.

Additional Comments/Instructions _____

_____

_____

_____

_____

_____

_____

_____

A copy of this completed form must be submitted to the Trane Service Agency that will be responsible for the start-up of the chiller.

CenTraVac Commissioning Checklist

Job Name _____ Location _____
Model # _____ Serial # _____
Sales Order # _____ Start-up Date _____

Note: The Unit Installation, Operation and Maintenance Manuals including Warning and Cautions, Applicable Service Alerts and Bulletins, Submittals, and Design Specifications must be used in conjunction with this checklist.

I. PRECOMMISSIONING PROCEDURES

A. Obtain Installation Check Sheet

This must be prepared by installer for a particular unit, verifying the unit is ready for commissioning.

B. Obtain Design (order) Specification Data

This indicates the design criteria of the particular unit. A unit cannot be properly commissioned unless this data is known. It is the responsibility of the selling office to furnish this data.

C. Obtain Wiring Diagrams

The "as-wired" electrical diagram should be compatible with the recommended Trane submittals and diagrams. Are customer added external/remote control circuits compatible?

☐ Yes ☐ No

D. General Installation Observations

☐ 1. Is there any apparent shipping or rigging damage? ☐ Yes ☐ No

2. Record the unit pressure upon receipt:_____psig. If there is no pressure, a leak test will have to be done before the unit can be evacuated and charged.

☐ 3. Is the water piping correctly installed?

Flow Switches	☐ Yes	☐ No	Pressure Gauges	☐ Yes	☐ No
Isolations Valves	☐ Yes	☐ No	Flow Balancing Valves	☐ Yes	☐ No
Thermometer Wells	☐ Yes	☐ No	Vent Cocks and Drains	☐ Yes	☐ No

☐ 4. Have proper clearances around the unit been maintained per submittal and/or Installation?
Are there Manual guidelines available
☐ Yes ☐ No

☐ 5. Is power wiring of adequate ampacity and correct voltage?
☐ Yes ☐ No

☐ 6. Is the unit base acceptable, level, and is the unit on isolators (rubber as supplied by Trane or spring type)?
☐ Yes ☐ No

☐ 7. Have the low voltage circuits been properly isolated from the higher voltage control and power circuits?
☐ Yes ☐ No

E. Comments _____

II. COMMISSIONING PROCEDURES

A. Pre-start Operations

1. Holding Charge

- ☐ _____psig. Must be positive pressure or leak test must be done.

2. Before relieving the holding charge, calibrate the H.P.C. high-pressure control

This is a check of pressure to the H.P.C. as well as calibration of the control.

Disconnect and cap the flare. Calibrate H.P.C. and reconnect flare.

- ☐ Relieve the holding charge.
- ☐ Check and if necessary, tighten all connections per proper specs.

3. Megohm the Motor (500 volt Meggar)

- ☐ Compressor motor Megohms - refer to temp/resistance chart for acceptable values. Remove surge suppressors before Megging. Never Meg test with the unit in a vacuum.

T1 to Earth____	T4 to Earth____	T1 to T2	T1 to T4____
T2 to Earth____	T5 to Earth____	T1 to T3	T2 to T5____
T3 to Earth____	T6 to Earth____	T2 to T3	T3 to T6____

4. Evacuation

Connect the vacuum pump to start evacuation. Use a 2-stage pump with at least 5 CFM capacity.

Connect to the evaporator-charging valve with a hose no smaller than 3/4 inch ID.

a. For the IT Cutler-Hammer Solid State Starter it is necessary to shut off all power to the unit prior to evacuating the chiller. The IT starter has terminals 4, 5, & 6 hot when the unit is off. Failure to shut off power to the chiller, with the vacuum pump hook up, will cause a motor failure.

5. Condenser

- ☐ Isolation and flow valves installed
- ☐ Calibrated thermometers and pressure gauges installed in/out condenser on machine side of any valve or elbow.
- ☐ If condenser pump controlled by UCP, is field wiring correct and complete?
- ☐ Condenser pump(s) run, system and strainers properly cleaned and/or flushed.
- ☐ Condenser water strainer in close proximity to entering connection of condenser.
- ☐ Previsions installed to properly maintain water treatment additives.
- ☐ Initial water treatment added to system
- ☐ Flow or differential pressure switch installed and where possible, wired in series with auxiliary of pump motor starter. Verify correct operation of flow proving circuit.
- ☐ Condenser water flow balance.

PSID design_____	PSID actual_____
GPM design_____	GPM actual_____

6. Evaporator

- ☐ _____psig. Must be positive pressure or leak test must be done.
- ☐ Calibrated thermometers and pressure gauges installed in/out of evaporator on machine side of any valve or elbow.
- ☐ If evaporator pump controlled by UCP, is field wiring correct and complete?

- [ ] Evaporator pump(s) run 24 hrs. System and strainers properly cleaned and/or flushed.
- [ ] Evaporator water strainer in close proximity to entering connection of evaproator.
- [ ] Provisions installed to properly maintain water treatment additives.
- [ ] Initial water treatment added to system.
- [ ] Flow or differential pressure switch installed and where possible, wired in series with auxiliary of pump motor starter. Verify correct operation of flow proving circuit.
- [ ] Evaporator water flow balanced.

PSID design_____ PSID actual_____

GPM design_____ GPM actual_____

7. Electrical and Controls

a. Motor Starter Panel

- [ ] All terminals tightened.
- [ ] Wiring free from abrasion, kinks, and sharp corners.
- [ ] Contactors and relays have freedom of movement.
- [ ] All contacts are free of corrosion or dirt. Panel is free of dust, debris etc.
- [ ] Check the ratio of the current transformers. Record the part numbers on the start-up log.
- [ ] Use only twisted shielded pair for the IPC circuit between the starter and the UCP on remote starters. Recommended wire is Belden 8760, 18 AWG. Polarity is critical.
- [ ] The low voltage IPC link (__30 volts) must be in separate conduit from the 115-volt wiring.
- [ ] IPC link routing within the starter panel must stay a minimum of 6 inches from higher voltages.
- [ ] Remote starter to UCP connections are complete and comply with Trane requirements. Verify oil pump interlock circuit to 1A7J2-4 and J2-2.
- [ ] Check the correctness of the power connections from the starter to the motor.
- [ ] Check the wiring to the starter for size, voltage and correct phase rotation (A-L1, B-L2, & C-L3)
- [ ] Check the equal phase representation in each power-wiring conduit.

b. Control Panel

- [ ] All terminals tightened.
- [ ] Wiring free from abrasion, kinks, and sharp corners.
- [ ] Low voltage wires are isolated from high voltage wires.
- [ ] Panel is free of dust, debris etc.
- [ ] "Power Up" the control panel. (Non-AFD Starters)
    1. Starter disconnect locked open.
    2. Fuse 2F4 must be removed from the starter.
    3. Connect auxiliary 115VAC-power cord to Terminals 1X1-5(L1) and 1X1-17(L2) in the control panel. MAKE SURE OF THE POLARITY. THE 'HOT' SIDE MUST BE CONNECTED TO TERMINAL 1X1-5(L1) AND THE 'NEUTRAL' SIDE DO 1X1-17(L2).
    4. Plug in cord to 115VAC-power source. Control panel is now energized.
- [ ] Record the configuration and setpoints of the CH530 control system, using Service Tool.
- [ ] Using the unit nameplate data and the order specification, double check and reset, if required, the settings of RLA & STMS, using Service Tool.

If Evaporator and condenser water pumps are controlled by the UCP, use the DynaView (or Service Tool) manual override menu to manually start and test the control of the pumps.

- ☐ Check the setting of the oil pressure-regulating valve.
  1. Use the DynaView manual override of the UCP to manually start the oil pump.
  2. Proceed to the Compressor Report menu and observe the Differential Oil Pressure
  3. Adjust the oil pressure-regulating valve to maintain 18 to 22 psid. The oil pressure-regulating valve may require adjustment as the unit is started.
  4. This procedure also checks to ensure correct sensing of oil pressure. The Oil Pressure Cutout setting is adjustable within via the CH530 Service Tool.
  5. Return Oil Pump control to 'Auto' from within the DynaView.
- ☐ Check vane operator and vanes (Service Tool).
  1. Use the Service Tool manual override menu to manually override the vane control.
  2. Enter targets from 0% to 100% and observe vane operation. At minimum and maximum travel the operator should not exert any force on the vane assembly, adjust as required.
  3. Vane movement is smooth to open/close.
  4. Vane movement is reported back to the UCP.
  5. Return Vane control to 'Auto'.
- ☐ Dry run the starter (Service Tool).
  1. Make sure the starter disconnect is safety locked open.
  2. Use the Service Tool menu of the UCP to initiate the Starter Dry Run.
  3. Observe correct operation of starter contactors.
  4. Observe correct operation of transition complete signal (if required).
  5. Disable Starter Dry Run when complete.
- ☐ Remove Power
- ☐ Disconnect and remove temporary power cord.

B. Preparation for Start-up.

1. Evacuation and charging

- ☐ Evacuation leak test. When vacuum has been drawn down to 500 microns to 1000 micons, secure the vacuum pump. Wait for 12 hours for a valid vacuum leak test. If the rise in vacuum is less than 500 microns per 12 hours start-up may proceed.
- ☐ Charge refrigerant. MAKE SURE THE CHILLED WATER IS FLOWING TRHOUGH THE EVAPORATOR. Charge the prescribed amount of refrigerant through the liquid charging valve at the liquid inlet to the evaporator. Check that all drums contain a full amount of refrigerant. Amount charged _____ lgs and kg.

2. Electrical

- ☐ Disconnect all temporary power cords, replace all fuses, connect motor leads, make final electrical inspection.
- ☐ Power up the motor starter. Check for control voltage at control panel terminals 1X1-1 and 1X1-17.
  _____ Volts
- ☐ Check current to the oil sump heater.
  _____ Amperes
- ☐ As the oil heats up, finish any operations not yet completed in preparation for starting the unit.

C. Chiller Start-up

1. Make all preliminary checks.

- Oil temp, oil level, chilled water flow, chilled water load available (cooling units on) etc.

2. Start the unit

- If the phase rotation of the electrical power has not been positively confirmed, the actual rotation of the motor must be checked. Observe the rotation of the motor shaft through the sight glass on the end of the motor at the moment of start-up. Rotation must be CLOCKWISE. If the phase sequence is incorrect, confirmed by observation of the Phase Reversal diagnostic on the UCP, then the incoming power leads to the stator must be adjusted by authorized personnel.
- As the unit starts and runs, observe closely all operating conditions.
- Adjust the oil pressure regulator if necessary to 18 to 22 psi net.
- In the DynaView Purge Settings menu of the UCP, place the Purge Operating Mode to 'on' to allow the removal of non-condensables. It may also be necessary to disable the Purge Pumpout Limit timer found in the Purge Settings menu.
- After the unit has the system down to design leaving chilled water temp and is under control, and the purge is no longer relieving non-condensables, begin taking the start-up test log. Log the unit a minimum of 3 times at 15-minute intervals.
- In the DynaView Purge Settings menu of the UCP, return the purge-operating mode to 'Adaptive'.
- Restart the chiller and carefully observed the starting and loading sequence.

3. Instructions to the Chiller Operator.

- Instructions for starting, operating, and shutting down.
- Instructions for logging the unit.
- Instrucitons for periodic maintenance.

D. After 2 weeks of operation (International Units Only)

1. Replace the oil filter with the spare oil filter included in the control panel at time of shipment.

E. Comments and/or Recommendations:

_____

_____

_____

_____

_____

_____

_____

_____

_____

Service Technician Signature Date

TRANE

STARTUP Chiller Report - Water Cooled CenTraVac
With CH530 Controller

Job Name	Serial #
Job Location	Model #
Sales Order #	Ship Date
Elevation	Start Date

DATE:

Starter Data:

Manufacturer	
Type	
Vendor ID#	
Model #	
Volts ? Hz	
Amps	

Current Transformers

Primary	X
Primary	X
Primary	X
Secondary (if present)	X
Secondary (if present)	X
Secondary (if present)	X

Motor Data:

Manufacturer	
Type & Frame	
Drawing#	
Serial#	

Nameplate Data

RLA	
KW	
Volts & Hz	

Machine Press

At Arrival	PSIG
At Startup	PSIG
Leak Test Vacuum	Microns
Vac Rise Test	Microns after hours
Unit Refrigerant Charge	lbs of R
High Pressure Cutout	HPC (3S1) Open HPC (3S1) Close

Design Data

RLA	
KW	
Volts & Hz	
Evap Flow	Actual
Evap PD	
Cond Flow	
Cond PD	

Dyna View Display Settings:

Date Format	
Date	
Time Format	
Time of Day	
Keypad/Display Lockout	
Display units	
Pressure Units	
Language	

Dyna View Purge Settings

Purge Operating Mode	
Daily Pumpout Limit	
Pumpout Limit Disable	
Purge Liquid Temp Inhibit	
Purge Liquid Temp Limit	
Purge Run Time	

Notes

STARTUP Chiller Report - Water Cooled CenTraVac With CH530 Controller

Dyna View Reports	Log 1	Log 2	Log 3
Evaporator			
Entering			
Leaving			
Saturated			
Refrig Press			
Approach			
Flow Sw status			
Condenser			
Entering			
Leaving			
Saturated			
Refrig Press			
Approach			
Flow Sw status			
Compressor			
Starts			
Running Time			
Oil Tank Press			
Oil Dischg. Press			
Oil Diff Press			
Oil Tank Temp			
IGV Position %			
IGV Steps			
Motor			
% RLA L1, L2, L3			
Amps L1, L2, L3			
Volts AB, BC, CA			
Power KW			
Load PF			
Winding #1 temp			
Winding #2 temp			
Winding #3 temp			
w/AFD only:			
AFD Freq			
AFD Speed			
AFD Transistor temp			
Purge			
Time Until Next Purge Run			
Daily Pumpout - 24 hrs.			
Avg. Daily Pumpout - 7 days			
Daily Pumpout Limit/Alarm			
Chiller On 7 days			
Pumpout Chiller On 7 days			
Pumpout Chiller Off 7 days			
Pumpout - Life			
Purge Rfgt Cprsr Suction Temp.			
Purge Liquid Temp.			
Carbon Tank Temp.			
Date:			
Technician:			
Owner:			

STARTUP Chiller Report - Water Cooled CenTraVac With CH530 Controller

TECHVIEW SETTINGS RECORDS

	TechView: Configuration View	Record Setting		TechView: Configuration View	Record Setting
	UNIT TYPE		33	Comm 4 Tracer Interface	
1	Unit Type		34	Comm 5 Tracer Interface	
	CH530 Tab		35	ICS Address Comm 4	
2	Control Sequence		36	ICS Address Comm 5	
3	Unit Capacity		37	Purge Control	
4	Starter Type		38	Compressor Power Source	
5	Refrigerant Type		39	% RLA and Rfgt Press Analog Output	
6	Line Voltage Sensing		40	Rfgt Pressure Analog Output (TYPE)	
7	Free Cooling		41	Min Delta Rfgt Press Output Cal	
8	Hot Gas Bypass		42	Max Delta Rfgt Press Output Cal	
9	Second Condenser		43	Max Capacity Relay Filter Time	
10	Hot Water Control		44	Head Relief Relay Filter Time	
11	Outdoor Air Temp Sensor		45	Base Loading	
12	External Chilled Water Setpoint			**TechView: Starter (non AFD)**	
13	ECWS Minimum Temperature		46	Stop Delay Time (Contactor Interupt Failure)	
14	ECWS Maximum Temperature		47	Unit Line Voltage	
15	External Current Limit Setpoint		48	Voltage Transformer Ratio	
16	ECLS Minimum %RLA		49	Rated Load Amps	
17	ECLS Maximum %RLA		50	CT Meter Scale	
18	Ice Building		51	Current Unbalance Trip Point	
19	EHWS Minimum Temperature		52	Current Unbalance Grace Period	
20	EHWS Maximum Temperature		53	Maximum Acceleration Setting	
21	Refrigerant Monitor Type		54	Acceleration Time Out Action	
22	Condenser Pressure Sensor		55	Overload Type	
23	Evap. Diff. Wtr Press Sensing		56	Phase Reversed Protection Enable	
24	Cond. Diff. Wtr Press Sensing		57	Contactor Integrity Test	
25	Enhanced Oil Temp Protection		58	Phase Reversed Grace Period	
26	Discharge Temp Sensors		59	Surge Protection Enable	
27	Bearing Temp Sensors		60	Momentary Power Loss Protection	
28	High Pressure Cutout		61	Restart Inhibit Stop to Start Time	
29	Impeller Diameter		62	Surge Sensitivity	
30	IGV Actuators		63	Power Loss Reset Time	
31	Alarm, Limit Warning, Cprsr Run Relays				
32	Max Cap, Head Relief Request Purge Relays				

STARTUP Chiller Report - Water Cooled CenTraVac With CH530 Controller

	SETPOINT VIEW: Chiller				
64	Front Panel Chilled Water Setpoint		101	Check Oil Filter Diagnostic	
65	Front Panel Current Limit Setpoint		102	Check Oil Filter Setpoint	
66	Front Panel Heating or Cooling Mode		103	Restart Inhibit Free Starts	
67	Front Panel Hot Water Setpoint		104	Restart Inhibit Start to Start	
68	Front Panel Base Loading Command		105	Restart Inhibit Diagnostic	
69	Front Panel Base Load Setpoint		106	Time Permitted at Minimum Capacity	
70	Front Panel Free Cooling Command		107	HGBP Mode, Vane Target Compressor	
71	Front Panel Ice Building Command		108	Maximum HGBP Time	
72	Front Panel Ice Termination Setpoint		109	High Discharge Temp Cutout	
73	Ice To Normal Cooling Timer		110	Local Atmosphere Pressure	
74	Differential to Start Setpoint		111	Minimum Capacity Limit	
75	Differential to Stop Setpoint		112	Maximum Capacity Limit	
76	Setpoint Source		113	Start Sequence Type	
77	Power Up Start Delay				
78	Evaporator Pump Off Delay			SETPOINT VIEW: Feature Settings	
79	Condenser Pump Off Delay		114	Evap Pump Control Type	
80	Evaporator Design Delta Temp		115	Chilled Water Reset	
81	Condenser Design Delta Temp		116	Return Reset Ratio	
82	Evaporator Leaving Water Temp Cutout		117	Return Start Reset	
83	Inlet Guide Vane Max Steps First Stage		118	Return Max Reset	
84	Inlet Guide Vane Max Steps Second Stage		119	Outdoor Reset Ration	
85	Low Refrigerant Temp Cutout		120	Outdoor Start Reset	
86	Condenser Limit Setpoint		121	Outdoor Max Reset	
87	Evaporator Water Flow 1		122	External Current Limit Setpoint Enable	
88	Evaporator Pressure Drop 1		123	Ice Building Feature Enable	
89	Evaporator Water Flow 2		124	Hot Gas Bypass Feature	
90	Evaporator Pressure Drop 2		125	Hot Gas Bypass Maximum Timer Enable	
91	Evaporator Fluid Specific Gravity		126	Hot Gas Bypass Maximum Timer Setpoint	
92	Evaporator Fluid Specific Heat		127	Hot Gas Bypass Compressor Control Command	
93	Evaporator Low Water Flow Warning Setpoint		128	Hot Gas Bypass Valve Travel Time	
94	Condenser Water Flow 1		129	External Base Loading Enable	
95	Condenser Pressure Drop 1		130	Capacity Control Softload Time	
96	Condenser Water Flow 2		131	Current Limit Control Softload Time	
97	Condenser Pressure Drop 2		132	Current Limit Softload Start Point	
98	Oil Temp Control Setpoint		133	Phase Unbalance Protection	
99	Low Oil Temp Inhibit (Enhanced disabled)		134	Over/Under Voltage	
100	Low Differential Oil Pressure Cutout		135	Protection	
			136	Control Algorithm Flow Compensation	

Literature Order Number	CVHE-SVU01E-EN
File Number	SL-RF-CTV-CVHE-SVU01E-EN-0405
Supersedes	CVHE-SVU01D-EN 604
Stocking Location	La Crosse

Trane has a policy of continuous product and product data improvement and reserves the right to change design and specifications without notice.

Only qualified technicians should perform the installation and servicing of equipment referred to in this publication.

Trane
A business of American Standard Companies
www.trane.com

For more information contact your local district office or e-mail us at comfort@trane.com

TRANE

Wiring CVHE-W-8A

Library	**Service Literature**
Product Section	**Refrigeration**
Product	**Centrifugal Liquid Chillers**
Model	**CVHE, CVHF,CVHG,**
Literature Type	**Wiring**
Sequence	**8A**
Date	**June 6, 1996**
File No.	**SV-RF-CTV-CVHE-W-8A-**
Supersedes	**SV-RF-CTV-CVHE-W-8 - 5/94**

CenTraVac® Liquid Chillers

50 and 60 HZ
CVHE, CVHF, CVHG

Cooling-Only and Heat-Recovery, Direct-Drive CenTraVacs with UCP2 Control Panels

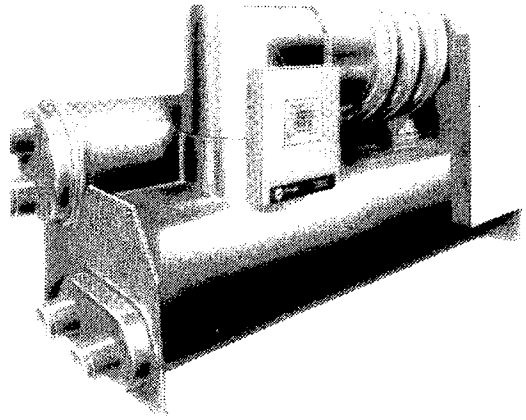

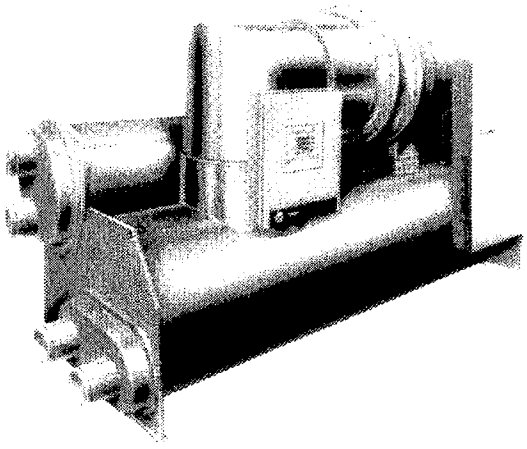

©American Standard Inc. 1996

Since the Trane Company has a policy of continuous product improvement, it reserves the right to change specifications and design without notice. The installation and servicing of the equipment referred to in this booklet should be done by qualified, experienced technicians.

Index of Diagrams

Figure No.	CVHE, CVHF UCP2 Schematic	Drawing No.	Page No.
1	Remote Across the Line Starter	2307-5201 A	4 and 5
2	Remote Primary Reactor Starter	2307-5202 A	6 and 7
3	Remote Auto Transformer Starter	2307-5203 A	8 and 9
4	Remote Wye-Delta Starter	2307-5204 A	10 and 11
5	Remote Adaptive Frequency Drive	2307-5205 A	12 and 13
6	Customer Supplied Across the Line Starter	2307-5206 A	14 and 15
7	Remote Mounted Solid State Starter	2307-5207 A	16 and 17
8	Unit Mounted Solid State Starter	2307-5208 A	18 and 19
9	Unit Mounted Wye-Delta Starter	2307-5209 A	20 and 21
10	Customer Supplied Solid State Starter	2307-5210 A	22 and 23
11	Customer Supplied Wye-Delta, Primary Reactor, or Auto Transformer Starter	2307-5211 A	24 and 25
12	Purge Module	2307-5212 A	26 and 27
13	Human Interface, Stepper and Circuit Modules	2307-5213 A	28 and 29
14	Chiller and Communications Modules	2307-5214 A	30 and 31
15	Options I.O. Module and Refrigerant Monitor	2307-5215 A	32 and 33
16	UCP2 Field Wiring Lay-Out Diagram	2307-5217 A	34 and 35
17	Field Connection Wiring	2307-5218 A	36 and 37
18	Field Connection Wiring - Starter by Others	2307-5219 A	38 and 39
19	Remote Adaptive Frequency Drive with Solid State By-Pass	2307-5220 A	40 and 41
20	Solid State Inside the Delta	2307-5221 A	42 and 43

Schematic Wiring Legend

Device Designation	Description	Line Number
1CB1	Circuit Breaker - Starter	19
1CB2	Circuit Breaker - Purge	65
1CB3	Circuit Breaker - Unit Control	145
1F2	Oil Pump Fuse	167
1T1	Control Power Transformer	122
1TB1	Control Panel Term Block	
1U1	Chiller Module	Page 4
1U10	I.O. Module	Page 5
1U2	Circuit Module	Page 3
1U3	Stepper Module	Page 3
1U4	Clear Language Display	Page 3
1U5	Options Module	Page 5
1U7	Printer COM Module	Page 4
1U8	Tracer COM 3 Module	Page 4
1U9	IPC Buffer Module	Page 4
1U11	Tracer COM 4 Module	Page 4
2BP1,2,3	By-Pass Contactor	3,6,9
2CB1	Circuit Breakr (Shunt Trip)	30
2F1,2,3	Primary Starter Fusing	3,6,10
2F4	Secondary Control Power Fuse	13
2K1	Start Contactor	27
2K2	Run Contactor	30
2K3	Shorting Contactor	33
2K4	Transition Contactor	36
2R1	Heat Sink Temp Sensor	32
2T1, 2,3	Current Transformers	2,5,8
2T4	24V Power Supply	14
2T5	Control Power Transformer	12
2T6, 7, 8	Potential Transformer (OPT)	18, 20, 22
2TB1	Control Term. Strip	
2TB2	IPC Term Strip	
2TB3	Line Terminal Block	
2U2	Starter Control	
2U1	Starter Module	Page 1
3B5	Purge RFGT Compressor	78
3B6	Purge Pump-Out Compressor	80
3L1	Tank Valve Solenoid	76
3L3	Exhaust Valve Solenoid	74
3R3	Cond. RFGT Press.	165
3RT2	RFGT Comp Suction Temp	75
3S1	Cond high Press Switch	19
3S2	Service Pumpout Switch	79
3S3	Liquid Level Sensor	77
3T1	Purge Power Supply Trans	68
3U1	Purge Module	Page 2

Prefix Code	
1 =	Main Control Panel
2 =	Starter Control
3 =	Purge
4 =	Unit Mounted Device
5 =	Provided By Others

Note: Dashed Lines Indicate Wiring By Others

Continued next page

Schematic Wiring Legend

Device Designation	Description	Line Number
4B1	Compressor Motor	5
4B12	Free Cooling Actuator	266
4B13	Free Cooling Actuator	274
4B1R2,3,4	Motor Winding Temp	150-155
4B2	Stepper Motor Vane Actuator	133
4B3	Oil Pump Motor	169
4B3	Dual Filter Transfer Valve	162
4B4	Dual Filter Transfer Valve	163
4B5	Hot Gas By-Pass Valve	251
4C1	Capacitor - Oil Pump	168
4HR1	Oil Tank Heater	165
4K8	Oil Pump Starter Relay	169
4L1	Vent Line Solenoid	157
4L2	Evap Wtr Press. Soenoid	211
4L3	Cond Wtr Press. Solenoid	213
4R1	Oil Sump Press	170
4R2	Oil Pump Discharge Press	175
4R3	Evap Ent & Lvn Wtr Press	209
4R4	Cond Ent & Lvn Wtr Press	237
4RT1	Sat Cond Temp (Retrofit Only)	73
4RT1	Evap Entering Water Temp.	232
4RT11	Aux Heat Rec Ent Temp	258
4RT12	Aux Heat Rec Lvn Temp	260
4RT2	Evap Leaving Water Temp	211
4RT3	Cond Entering Water Temp	213
4RT4	Cond Leaving Water Temp	215
4RT5	Sat Evap Rfgt Temp	132
4RT6	Discharge Temp	134
4RT7	Bearing Temp 1	136
4RT8	Bearing Temp 2	138
4RT9	Sat Cond Rfgt Temp	142
4S1	Dual Filter Switch	162
5DS1	Alarm Light (Latching)	225
5DS2	Alarm Light (Non-Latching)	229
5DS3	Pump-Out Running (Tracer) Relay	84
5K1	Chilled Wtr Pump Relay	217
5K10	Purge Alarm Relay	86
5K2	Cond Wtr Pump Relay	219
5K3	Comp Running Relay	222
5K4	Alarm Relay	224
5K5	Limit Warning Relay	227
5K6	Ice Making Relay	260
5K7	Head Relief Request Relay	262
5K8	Maximum Capacity Relay	264
5K9	Tracer Controlled Relay	270
5RT1	Tracer Temp Sensor	272
5S1	Chilled Water Flow Switch	231
5S2	Cond Water Flow Switch	232
5S3	External Auto Stop	217
5S4	Emergency Stop	219
5S5	Heat Pump Control	225
5S6	Ext Free Cooling	262
5S7	Ice Making	264
5U1	Refrigerant Monitor	280

Prefix Code	
1 =	Main Control Panel
2 =	Starter Control
3 =	Purge
4 =	Unit Mounted Device
5 =	Provided By Others

Note: Dashed Lines Indicate Wiring By Others

General Information

Literature Change History

CVHE-W-8A - June 1996
Addition of CVHG models and general update.

CVHE-W-8 - May 1994
Original issue of manual covering CVHE and CVHF models.

Design Sequences

CVHE units, A2 - 2J
CVHF units, A0 - T0
CVHG units, A0 - K0

Unit Models		
CVHE 60 HZ		
230	250	280
320	360	400
450	500	560
630	710	800
CVHE 50 HZ		
190	210	240
270	300	330
370	420	470
530	590	660
CVHF 60 HZ		
555	640	650
770	910	1060
1280		
CVHG 50 HZ		
670	780	920
1067		

Unit Information

To determine the electrical characteristics of a specific chiller, always refer to the unit nameplate. The unit nameplate is mounted on the left-hand side of the unit control panel and lists the installation and maintenance manuals required for the chiller. Example: CVHE-IN-8 and CVHE-M-7. The nameplate also provides electrical data for the compressor motor, oil pump motor, oil tank heater and purge compressor motor.

Use the chiller model number or product description block on the unit to determine the following information.

1. Machine design sequence;

2. Starter location (i.e., unit mounted versus remote-mounted);

3. Unit type (i.e., standard unit, heat recovery, auxiliary condenser, or free-cooling).

4. Whether the unit has Hot Gas By Pass.

For specific electrical connection and schematic information, always refer to the wiring diagrams and schematics that shipped with the unit.

As you review this manual, keep in mind that all field-installed wiring must conform to NEC guidelines, as well as to any applicable state and local codes. Be sure to satisfy any special grounding requirements that may be necessary.

All field-installed wiring should be checked for proper terminations, and for possible shorts or grounds.

Notice that warnings and cautions appear at appropriate intervals throughout this manual.

WARNINGS are provided to alert installing contractors to potential hazards that could result in personal injury or death, while CAUTIONS are designed to alert personnel to conditions that could result in equipment damage.

Caution!

⚠ The diagrams illustrated in this manual are typical for the above design sequence units. Refer to the "as-built" diagrams for specific information.

WARNING!

⚠ When servicing the machine, disconnect electrical power source to prevent injury or death due to electrical shock.

Adaptive Frequency Drive™

An overall field wiring layout of the Adaptive Frequency Drive is shown in this manual. The following information is offered when installing Adaptive Frequency Drive enclosure to provide electrical access. DO NOT CUT ADAPTIVE FREQUENCY DRIVE ENCLOSURE. Refer to the installation manual (AFDA-IN-1) which shipped with the Adaptive Frequency Drive.

WARNING!

⚠ **Do not cut Adaptive Frequency Drive enclosure. Debris falling inside frequency drive may cause failure of electronic components.**

Figure 1
Typical UCP2 Schematic CVHE, CVHF, CVHG
Remote Across the Line Starter

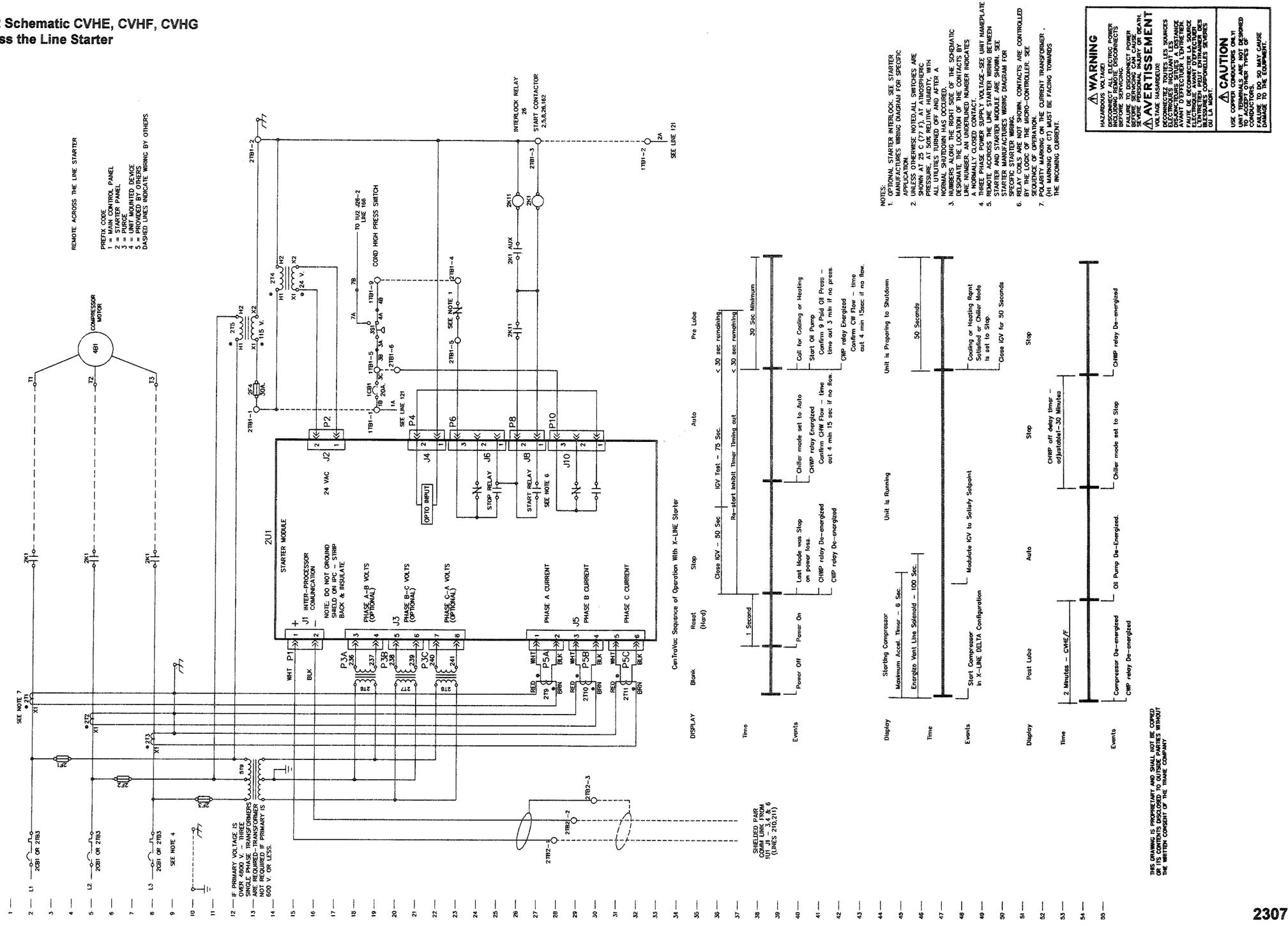

2307-5201A

Figure 2
Typical UCP2 Schematic CVHE, CVHF, CVHG
Remote Primary Reactor Starter

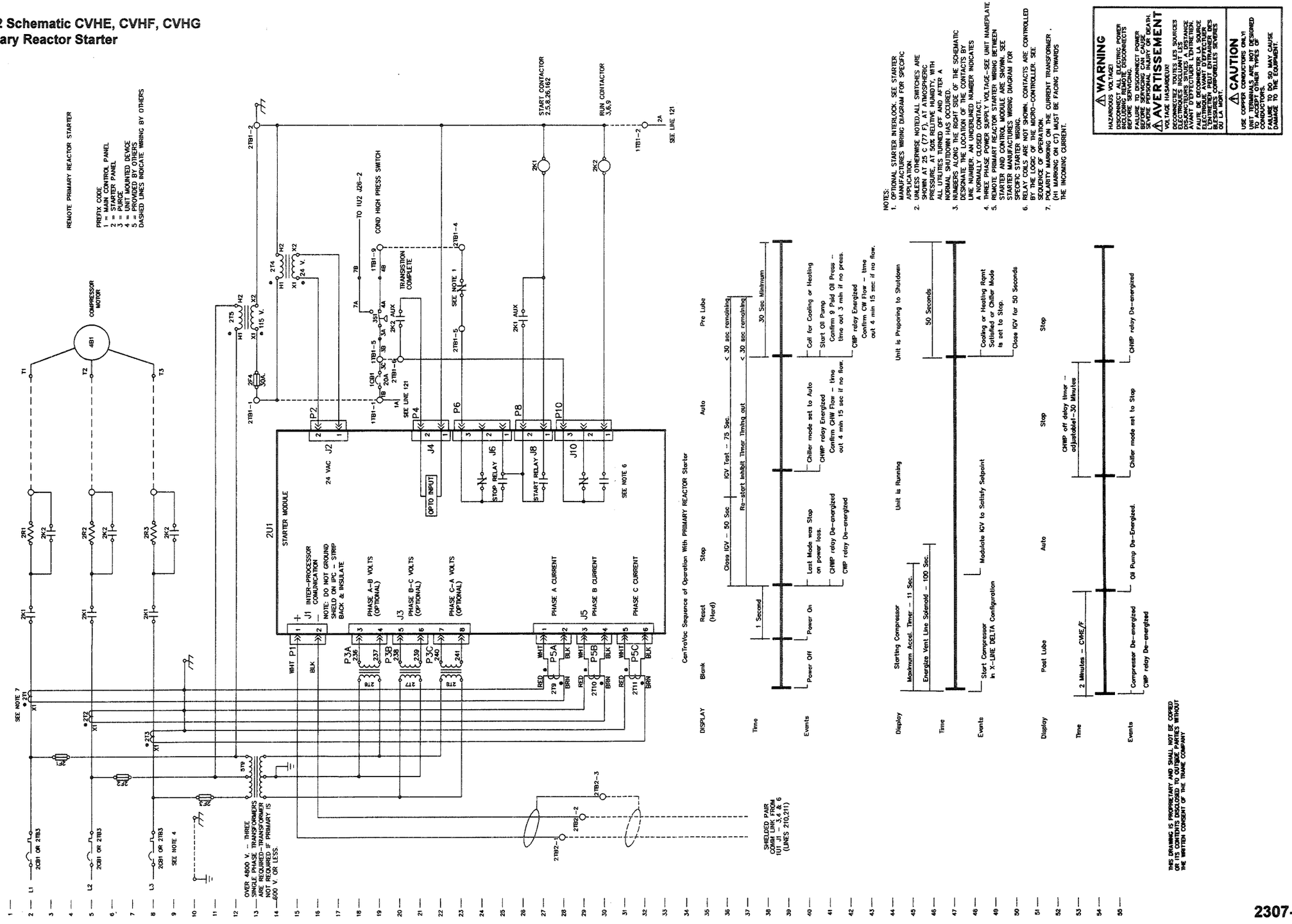

2307-5202 A

Figure 3
Typical UCP2 Schematic CVHE, CVHF, CVHG
Remote Auto Transformer Starter

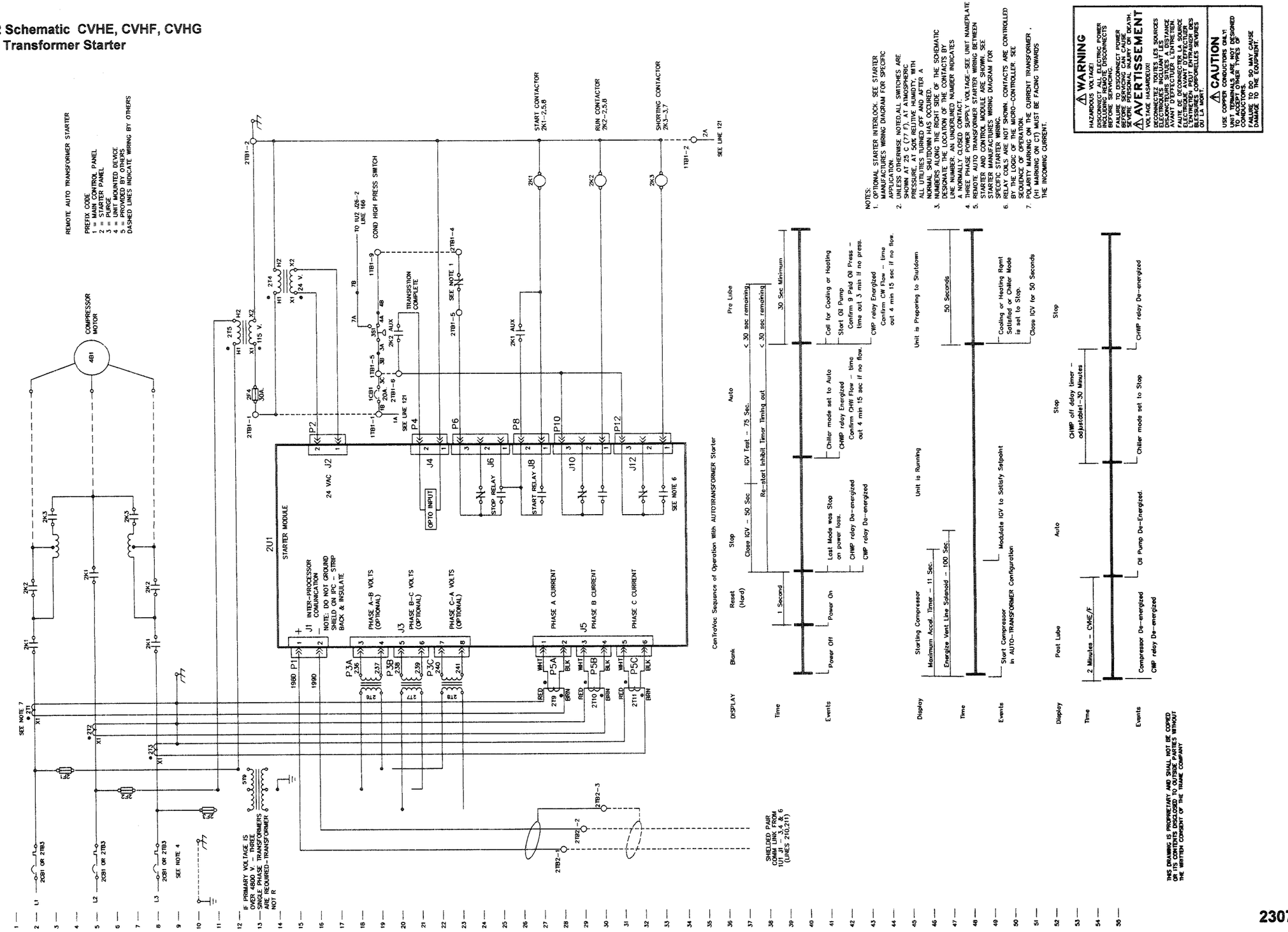

2307-5203 A

Figure 4
Typical UCP2 Schematic CVHE, CVHF, CVHG
Remote Wye-Delta Starter

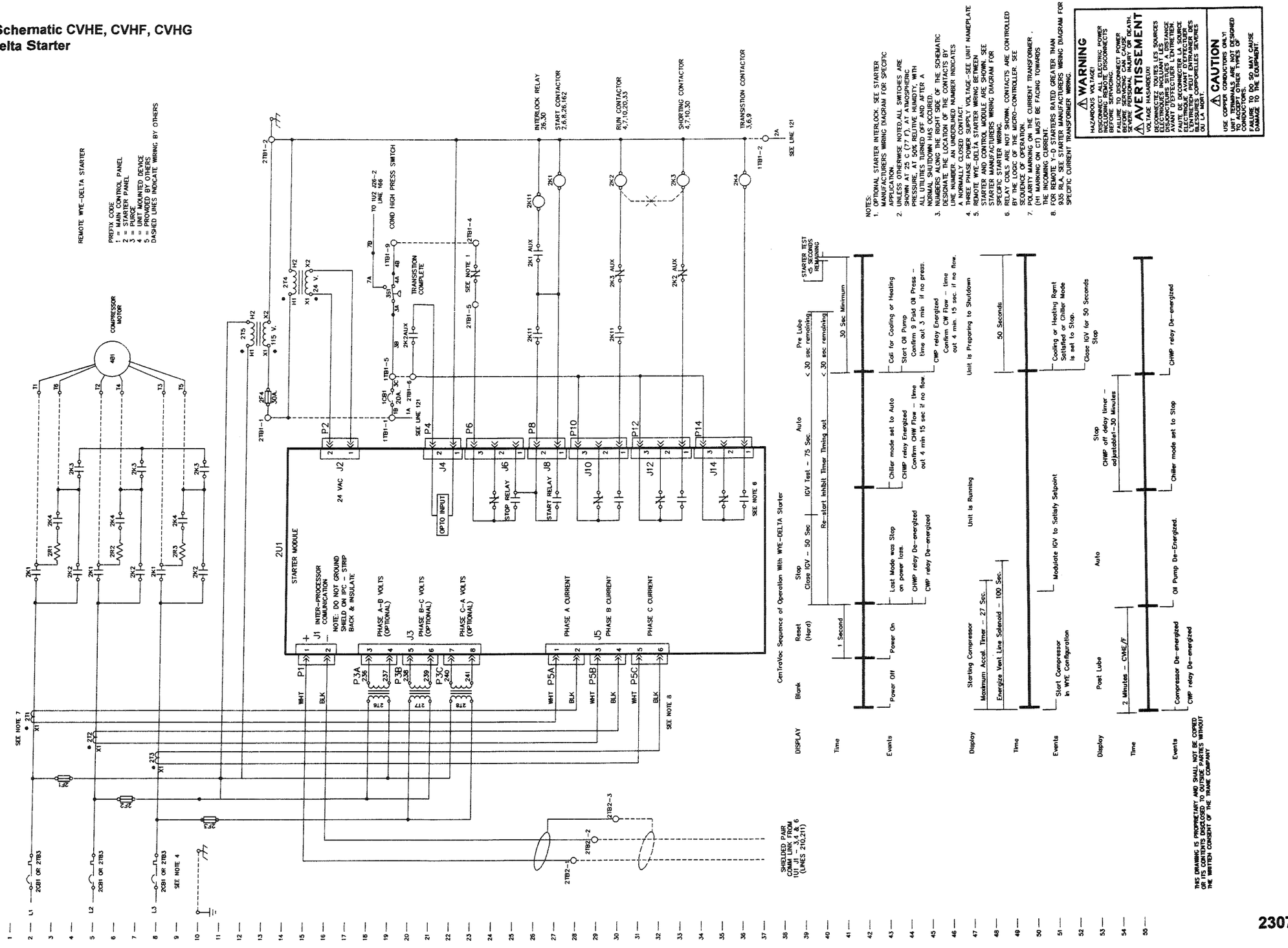

2307-5204 A

Figure 5
Typical UCP2 Schematic CVHE, CVHF, CVHG
Remote Adaptive Frequency™ Drive

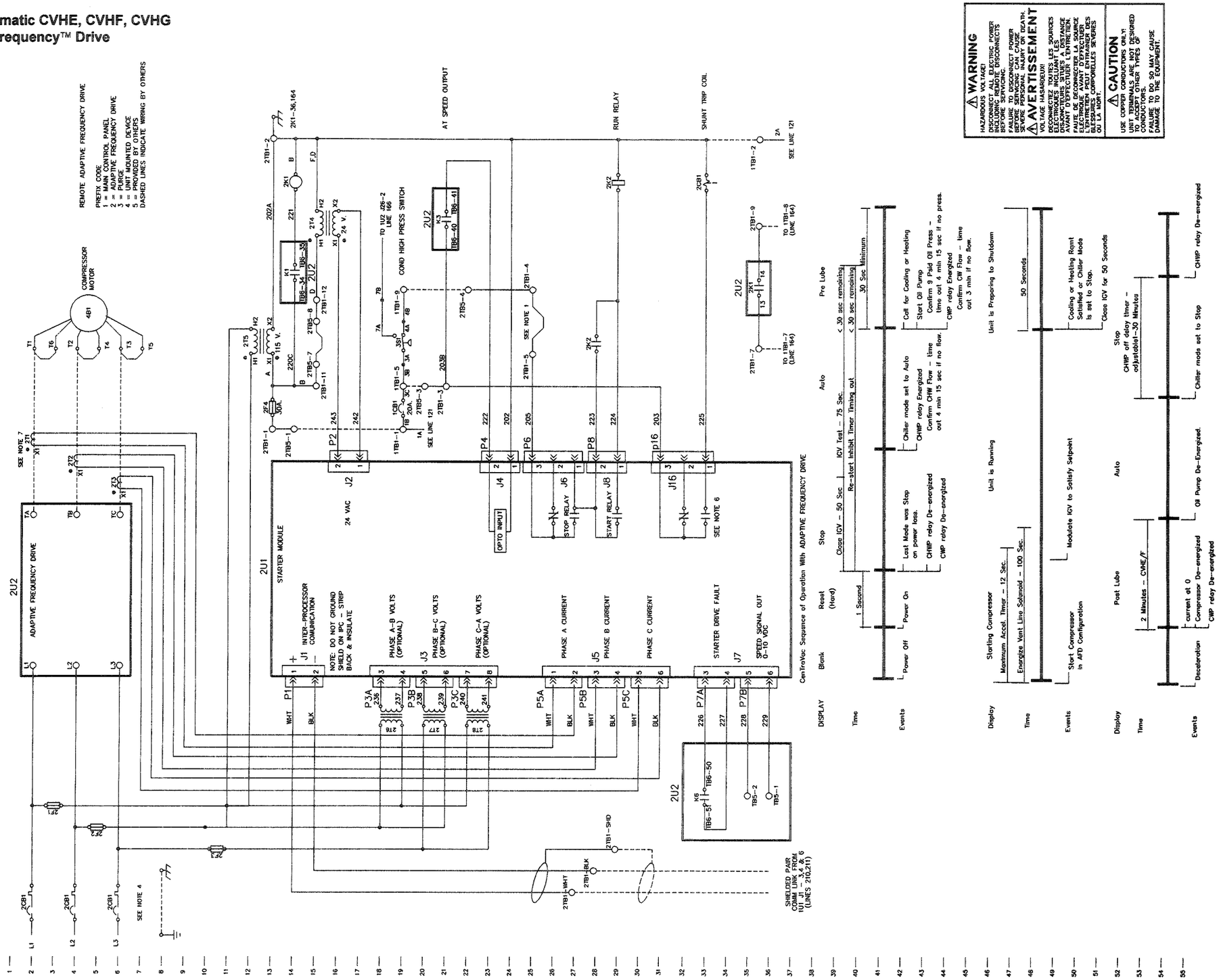

Figure 6
Typical UCP2 Schematic CVHE, CVHF, CVHG
Customer Supplied Across the Line Starter

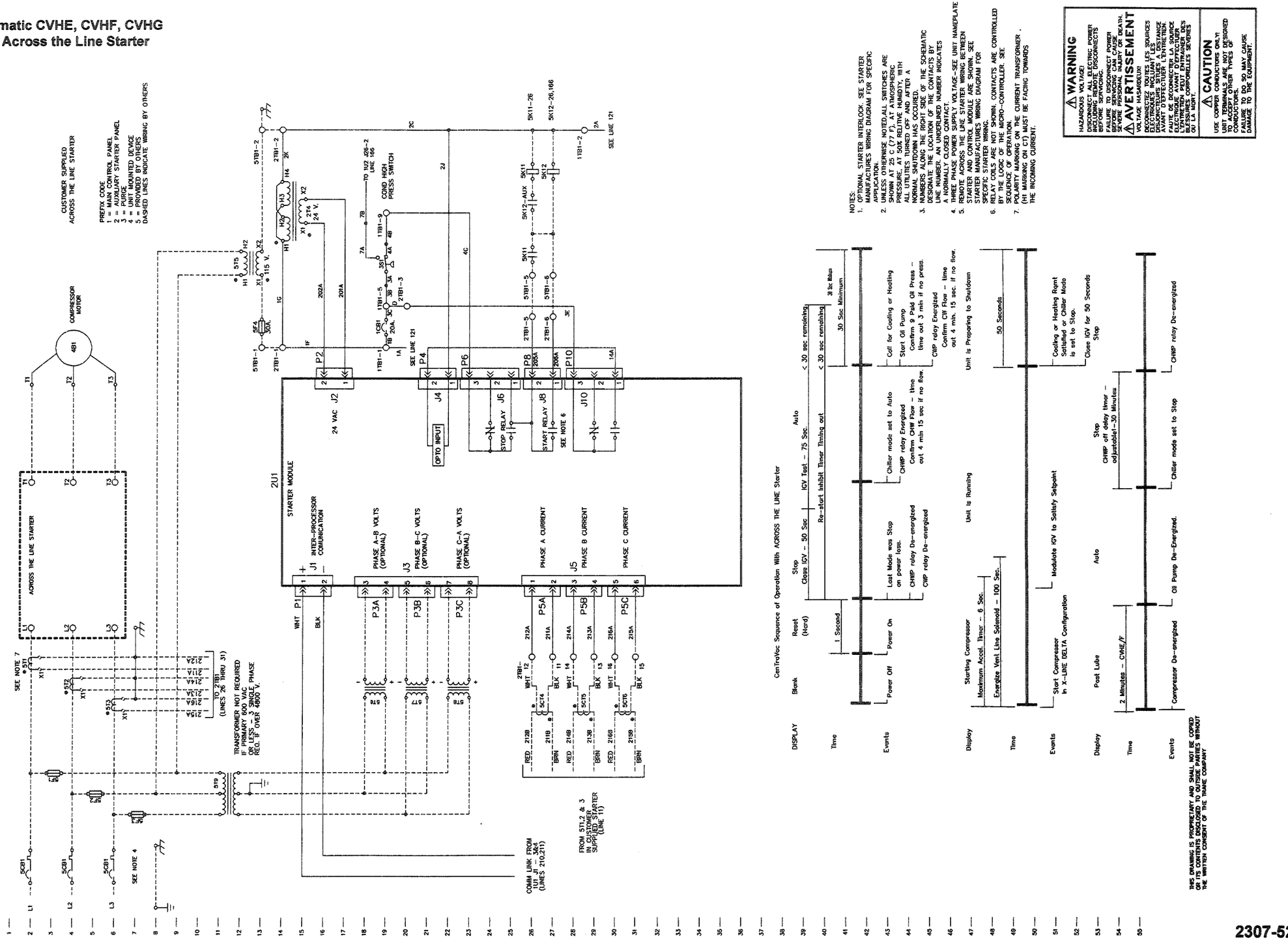

2307-5206 A

Figure 7
Typical UCP2 Schematic CVHE, CVHF, CVHG
Remote Mounted Solid State Starter

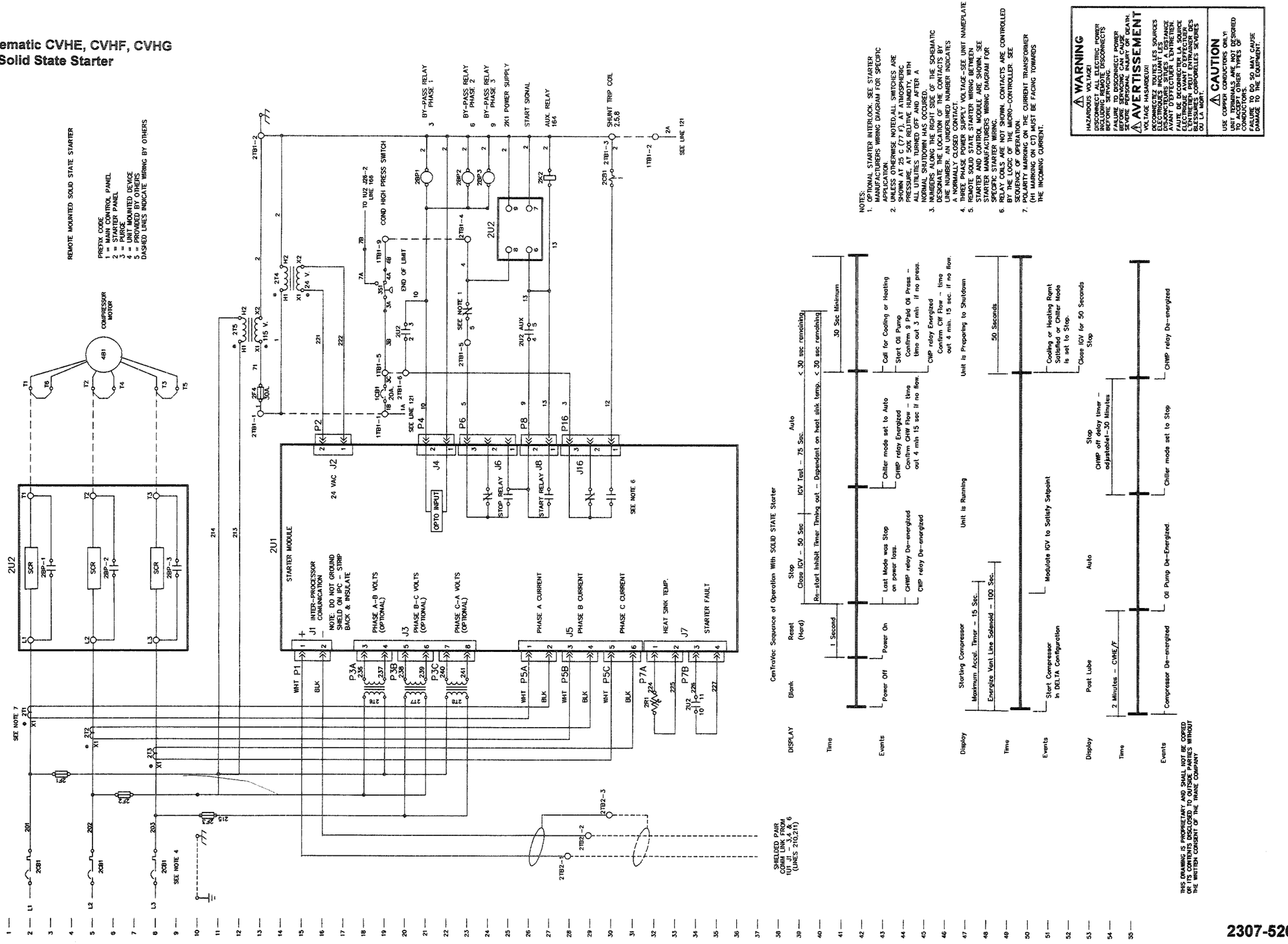

2307-5207 A

Figure 8
Typical UCP2 Schematic CVHE, CVHF and CVHG
Unit Mounted Solid State Starter

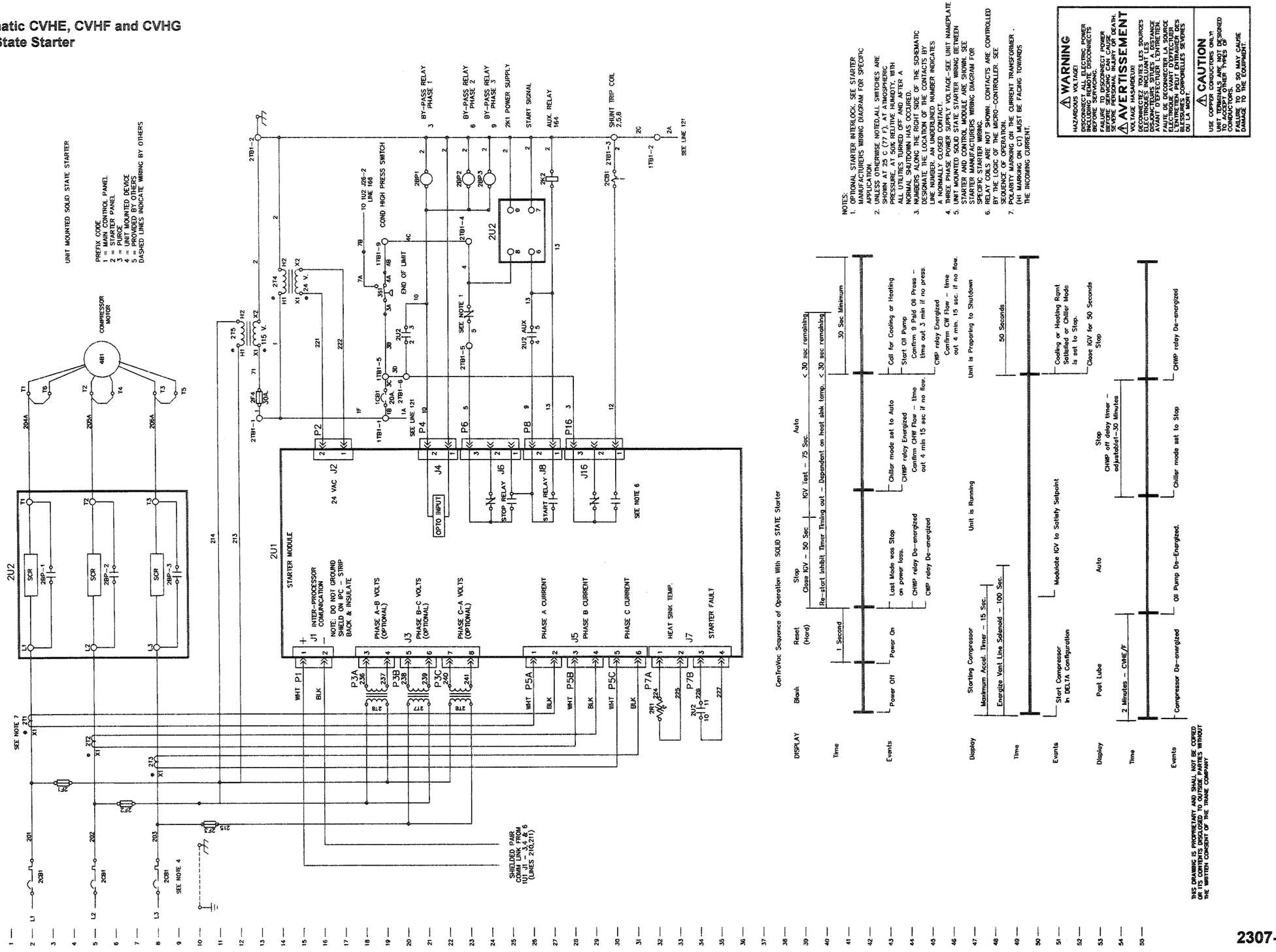

2307-5208 A

Figure 9
Typical UCP2 Schematic CVHE, CVHF, and CVHG
Unit Mounted Wye-Delta Starter

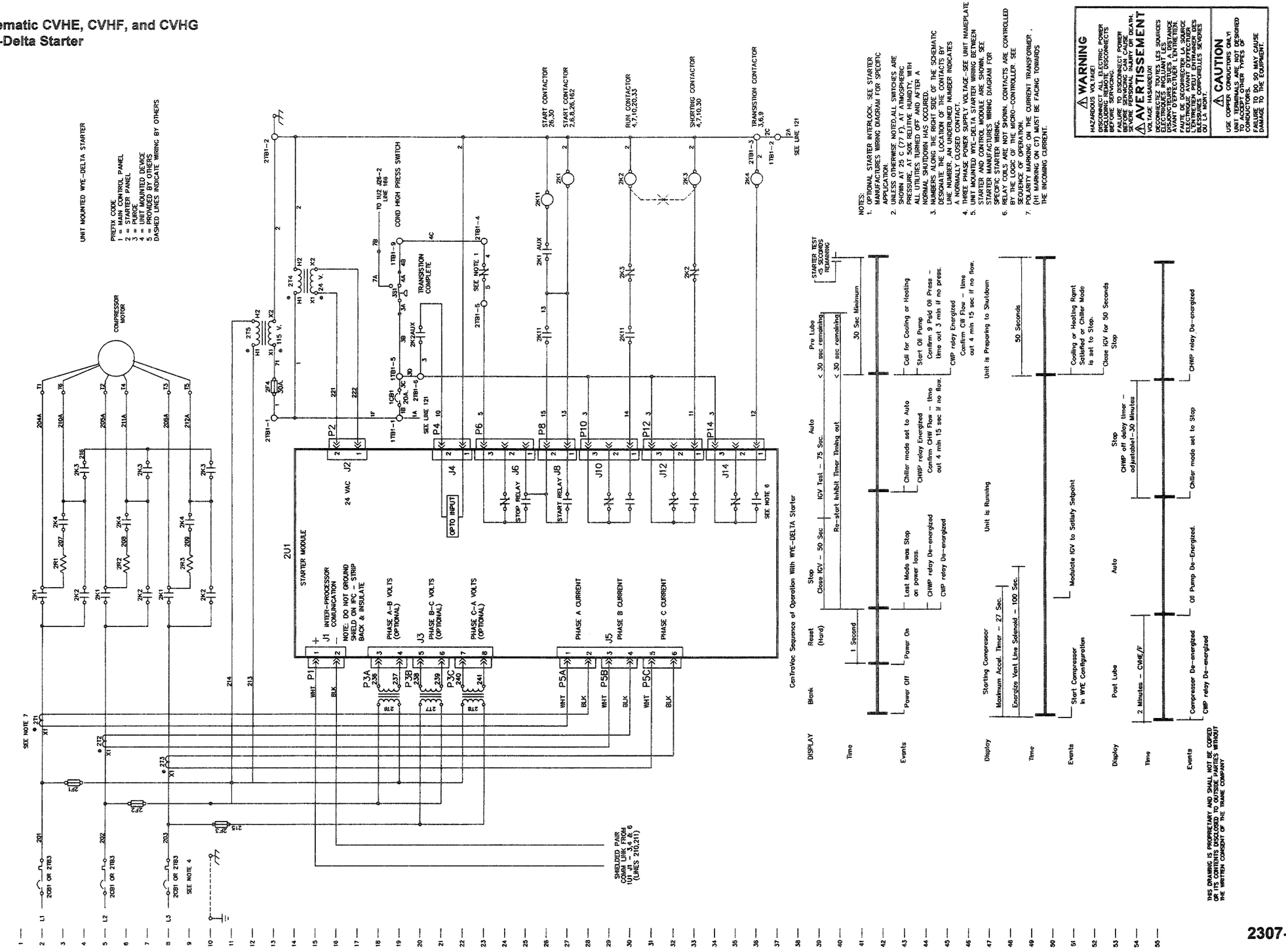

2307-5209 A

Figure 10
Typical UCP2 Schematic CVHE, CVHF, CVHG
Customer Supplied Solid State Starter

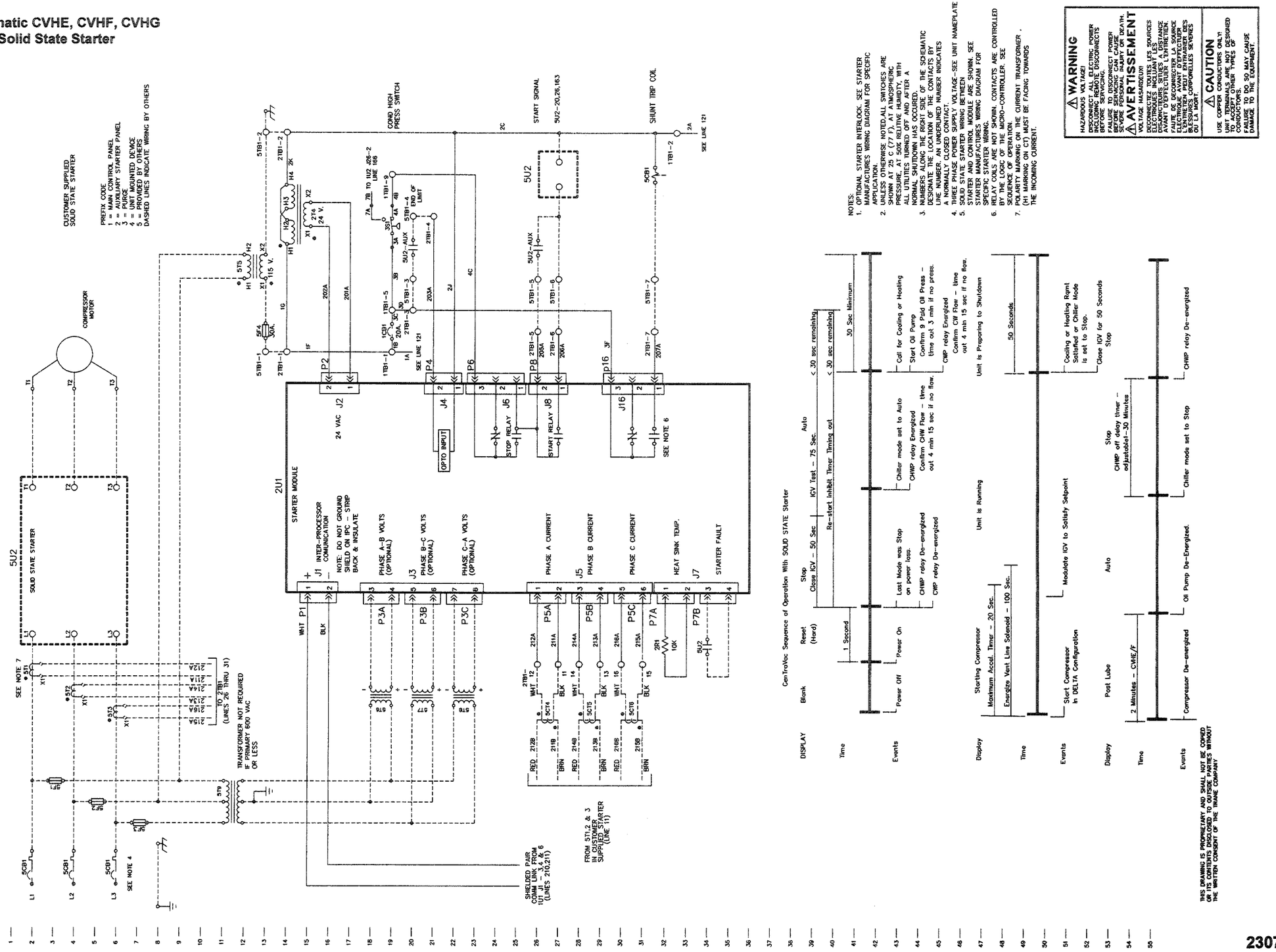

2307-5210 A

Figure 11
Typical UCP2 Schematic CVHE, CVHF, CVHG
Customer Supplied, Wye-Delta, Primary Reactor
or Auto Transformer Starter

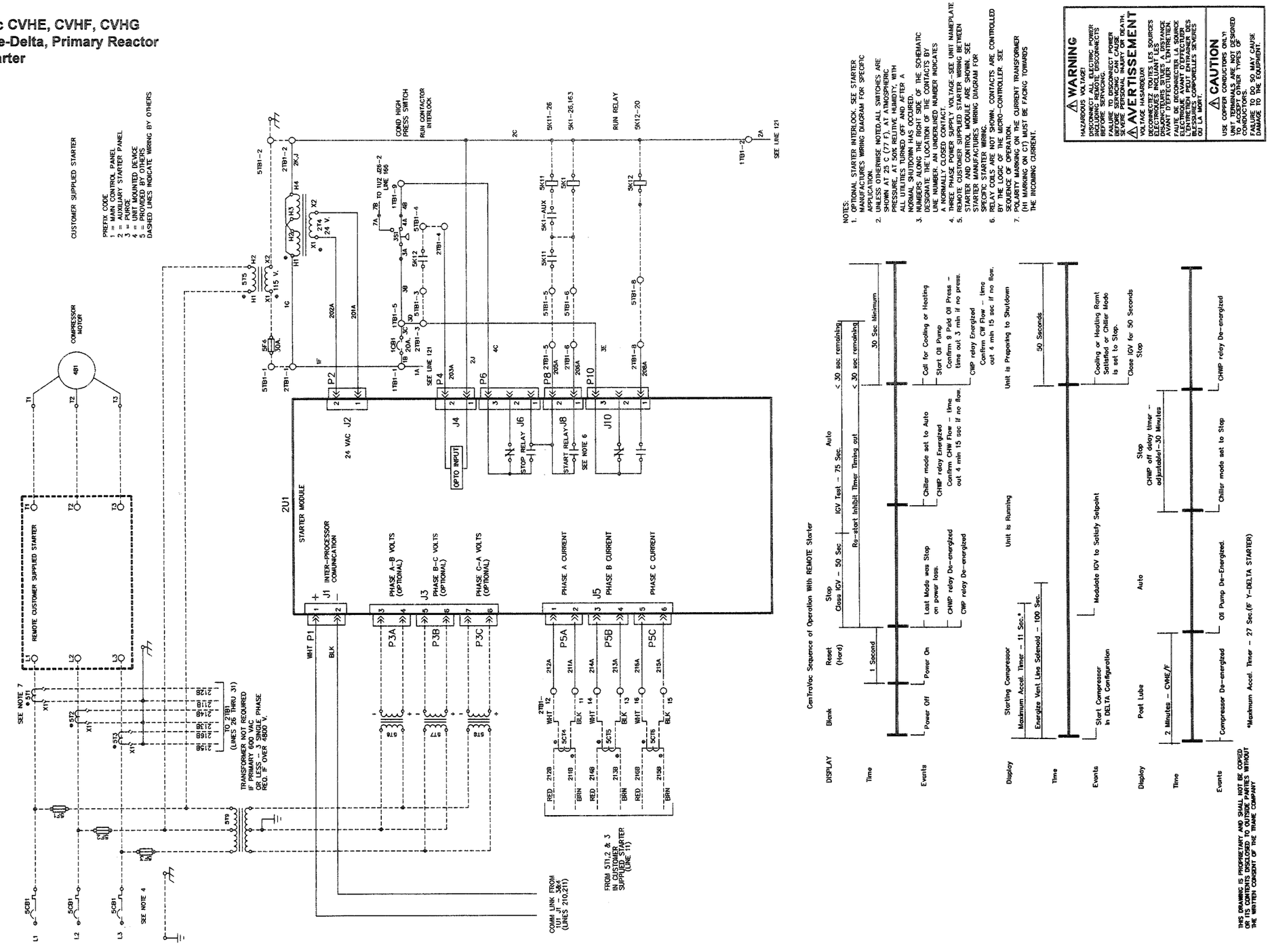

NOTES:
1. OPTIONAL STARTER INTERLOCK. SEE STARTER MANUFACTURERS WIRING DIAGRAM FOR SPECIFIC APPLICATION.
2. UNLESS OTHERWISE NOTED ALL SWITCHES ARE SHOWN AT 25 C (77 F), AT ATMOSPHERIC PRESSURE, AT 50% RELITIVE HUMIDITY, WITH ALL UTILITIES TURNED OFF AND AFTER A NORMAL SHUTDOWN HAS OCCURED.
3. MARKS SHOWN ON SOME WIRES OF THE SCHEMATIC DESIGNATE THE LOCATION OF THE CONTACTS BY LINE NUMBER. AN UNDERLINED NUMBER INDICATES A NORMALLY CLOSED CONTACT.
4. THREE PHASE POWER SUPPLY VOLTAGE--SEE UNIT NAMEPLATE
5. REMOTE CONTROL PANEL SUPPLIED STARTER WIRING BETWEEN STARTER AND CONTROL MODULE ARE SHOWN. SEE STARTER MANUFACTURERS WIRING DIAGRAM FOR SPECIFIC STARTER WIRING.
6. RELAY LOGIC OF THE SHOWN CONTACTS ARE CONTROLLED BY THE LOGIC OF THE MICRO-CONTROLLER. SEE SEQUENCE OF OPERATION.
7. POLARITY MARKING ON THE CURRENT TRANSFORMER (H1 MARKING ON CT) MUST BE FACING TOWARDS THE INCOMING CURRENT.

CenTraVac Sequence of Operation With REMOTE Starter

DISPLAY	Blank	Reset (Hard)	Stop	< 30 sec remaining	< 30 sec remaining	Auto
Time		1 Second	Close IGV - 50 Sec.	Re-start Inhibit Timer Timing out	IGV Test - 75 Sec.	30 Sec Minimum
Events	Power Off	Power On	Last Mode was Stop on power loss. CHWP relay De-energized	Chiller mode set to Auto CHWP relay Energized Confirm CHW Flow - time out 4 min 15 sec if no flow.	Call for Cooling or Heating Start Oil Pump Confirm 9 Psid Oil Press - time out 3 min if no press. CHWP relay Energized Confirm CW Flow - time out 4 min 15 sec if no flow.	

Display	Starting Compressor	Unit is Running	Unit is Preparing to Shutdown	50 Seconds
Time	Maximum Accel. Timer - 11 Sec.* Energize Vent Line Solenoid - 100 Sec.			
Events	Start Compressor In DELTA Configuration	Modulate IGV to Satisfy Setpoint		Cooling or Heating Remt Satisfied or Chiller Mode is set to Stop. Close IGV for 50 Seconds Stop

Display	Post Lube	Auto	Stop
Time	2 Minutes - CVHE/F		CHWP off delay timer - adjustable!-30 Minutes
Events	Compressor De-energized	Oil Pump De-Energized.	Chiller mode set to Stop	CHWP relay De-energized

*Maximum Accel. Timer - 27 Sec.(F Y-DELTA STARTER)

⚠ WARNING
HAZARDOUS VOLTAGE!
DISCONNECT ALL ELECTRIC POWER INCLUDING REMOTE DISCONNECTS BEFORE SERVICING.
FAILURE TO DISCONNECT POWER BEFORE SERVICING COULD RESULT IN DEATH OR SERIOUS PERSONAL INJURY.

⚠ AVERTISSEMENT
VOLTAGE HASARDEUX!
DÉCONNECTEZ TOUTES LES SOURCES D'ALIMENTATION ÉLECTRIQUE Y COMPRIS LES DISJONCTEURS AVANT D'EFFECTUER L'ENTRETIEN.
AVANT DE PROCÉDER À L'ENTRETIEN, DÉCONNECTER TOUTES LES SOURCES D'ALIMENTATION ÉLECTRIQUE AFIN D'ÉVITER LES BLESSURES CORPORELLES GRAVES OU LA MORT.

⚠ CAUTION
USE COPPER CONDUCTORS ONLY!
UNIT TERMINALS ARE NOT DESIGNED TO ACCEPT OTHER TYPES OF CONDUCTORS.
FAILURE TO DO SO MAY CAUSE DAMAGE TO THE EQUIPMENT.

THIS DRAWING IS PROPRIETARY AND SHALL NOT BE COPIED OR ITS CONTENTS DISCLOSED TO OUTSIDE PARTIES WITHOUT THE WRITTEN CONSENT OF THE TRANE COMPANY

2307-5211 A

Figure 12
Typical UCP2 Schematic CVHE, CVHF, CVHG
Purge Module

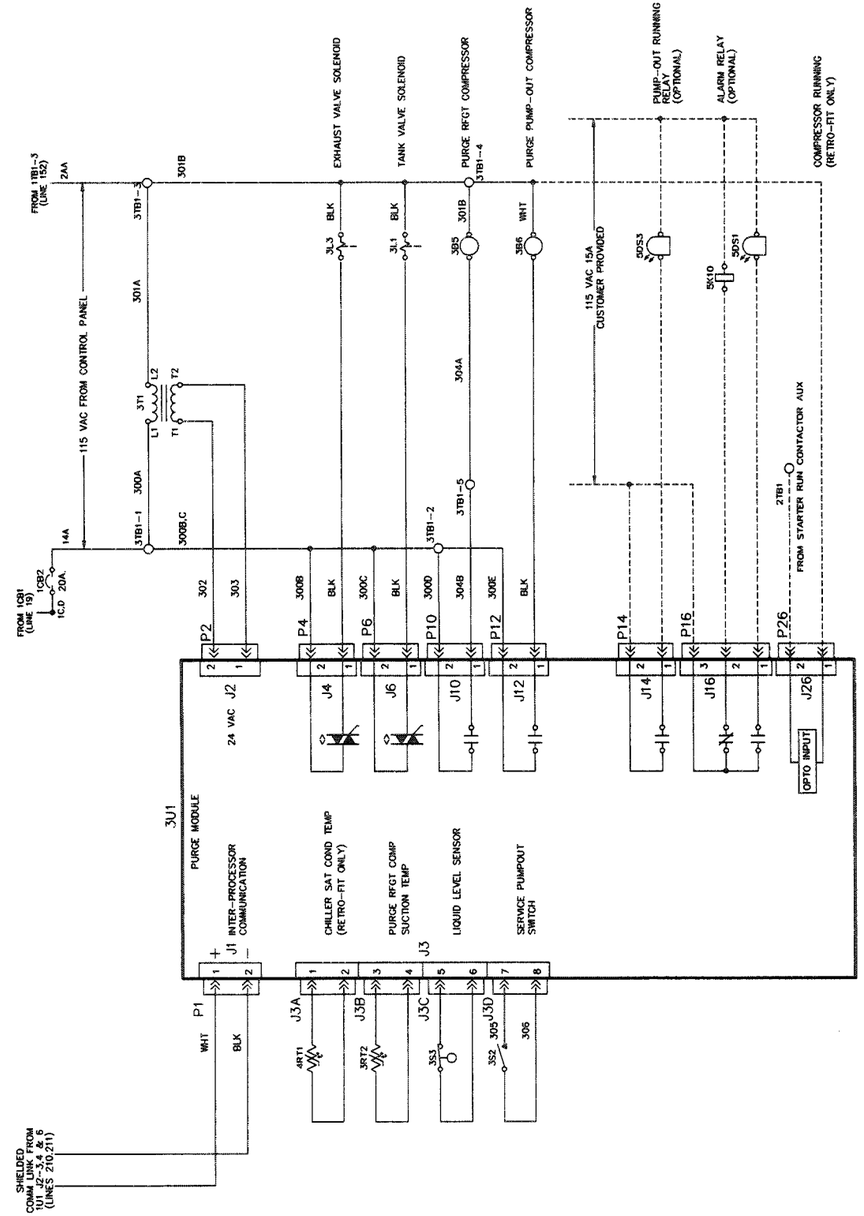

⚠ WARNING
HAZARDOUS VOLTAGE!
DISCONNECT ALL ELECTRIC POWER INCLUDING REMOTE DISCONNECTS BEFORE SERVICING.
FAILURE TO DISCONNECT POWER BEFORE SERVICING COULD CAUSE SEVERE PERSONAL INJURY OR DEATH.

⚠ AVERTISSEMENT
VOLTAGE HASARDEUX!
DÉCONNECTEZ TOUTES LES SOURCES D'ALIMENTATION ÉLECTRIQUE, Y COMPRIS LES DISJONCTEURS DISTANTS, AVANT L'ENTRETIEN.
FAUTE DE DÉCONNECTER LA SOURCE ÉLECTRIQUE AVANT D'EFFECTUER L'ENTRETIEN PEUT ENTRAÎNER DES BLESSURES CORPORELLES SÉVÈRES OU LA MORT.

⚠ CAUTION
USE COPPER CONDUCTORS ONLY!
UNIT TERMINALS ARE DESIGNED FOR ACCEPTABLE TYPES OF CONDUCTORS.
FAILURE TO DO SO MAY CAUSE DAMAGE TO THE EQUIPMENT.

THIS DRAWING IS PROPRIETARY AND SHALL NOT BE COPIED OR LOANED OR DISCLOSED TO OTHERS FOR ANY PURPOSES WITHOUT THE WRITTEN CONSENT OF THE TRANE COMPANY

2307-5212 A

Figure 13
Typical UCP2 Schematic CVHE, CVHF, CVHG
Human Interface, Stepper and Circuit Modules

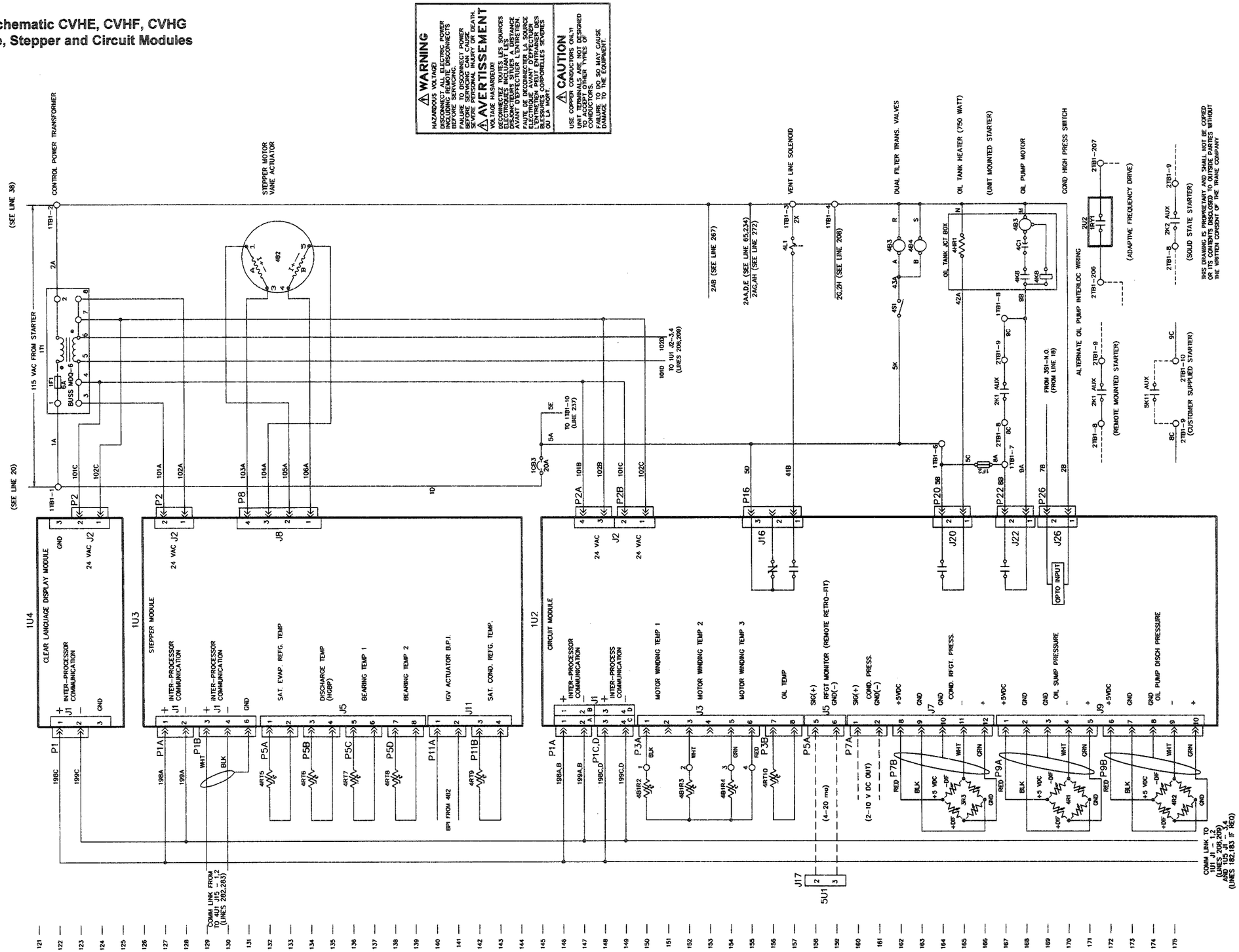

2307-5213 A

Figure 14
Typical UCP2 Schematic CVHE, CVHF, CVHG
Chiller and Communications Modules

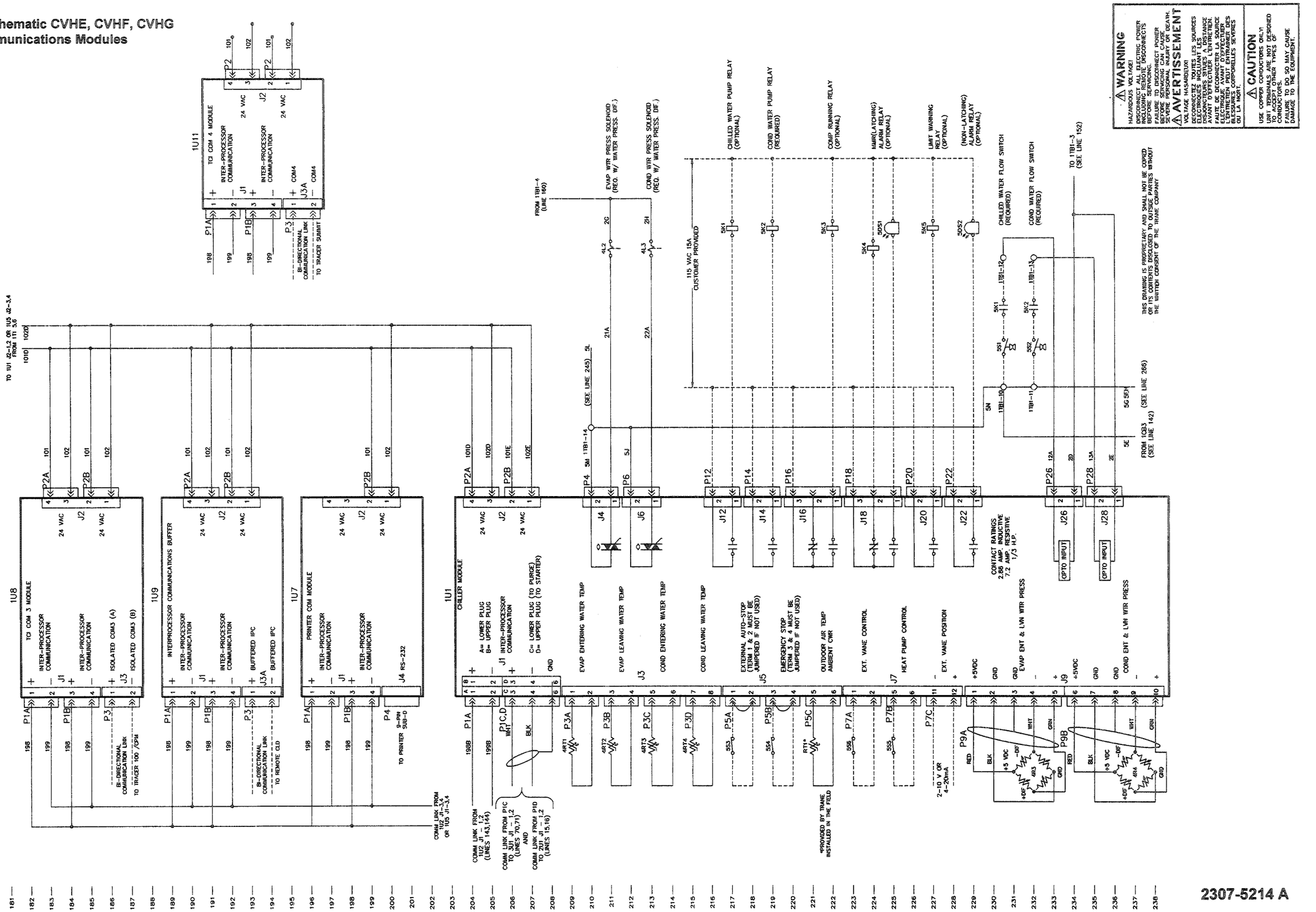

Figure 15
Typical UCP2 Schematic CVHE, CVHF, CVHG
Options I.O. Module and Refrigerant Monitor

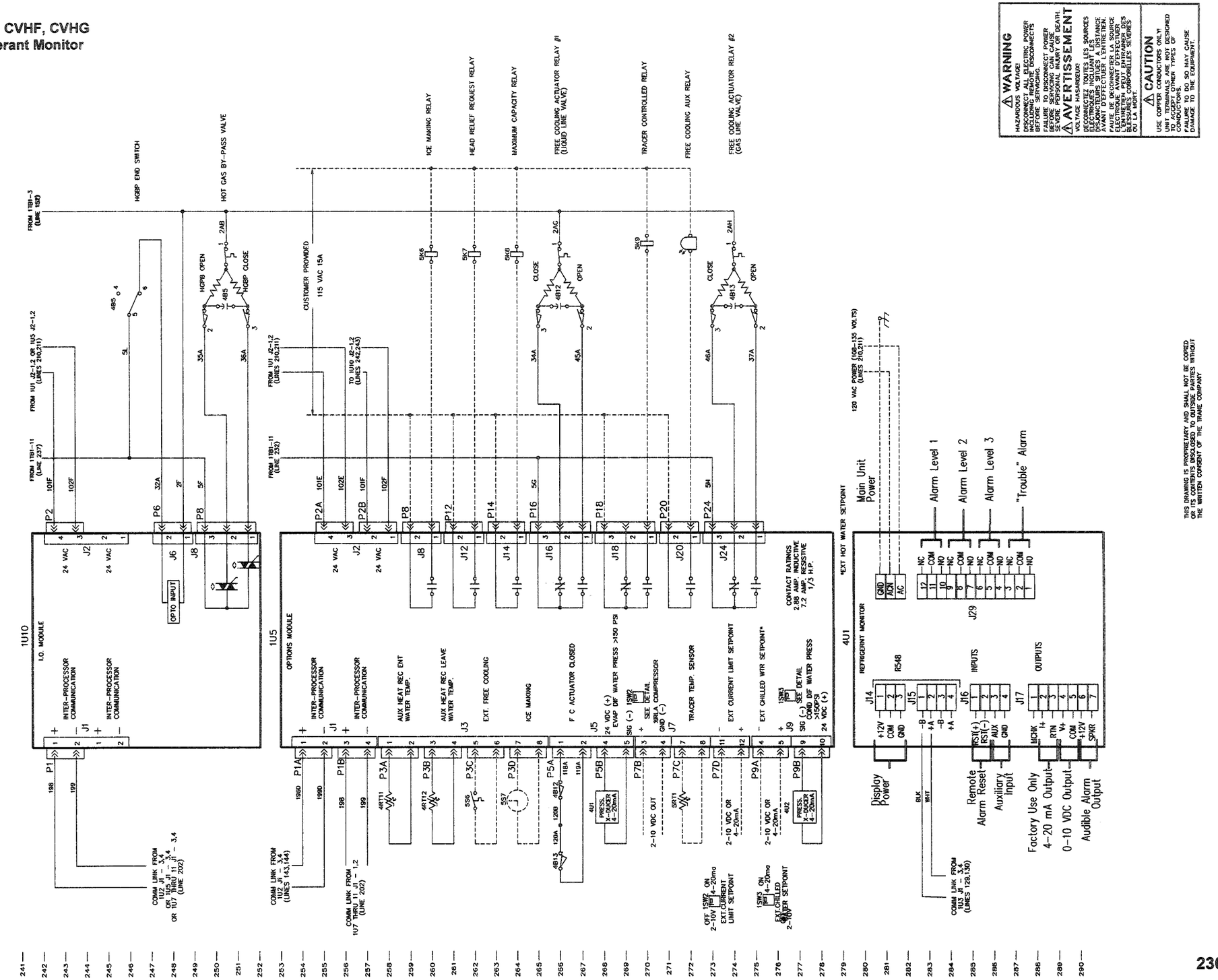

⚠ WARNING
HAZARDOUS VOLTAGE!
DISCONNECT ALL ELECTRIC POWER AND LOCK OUT DISCONNECTS BEFORE SERVICING.
FAILURE TO DISCONNECT POWER BEFORE SERVICING COULD RESULT IN SEVERE PERSONAL INJURY OR DEATH.
⚠ AVERTISSEMENT
VOLTAGE HASARDEUX!
DÉCONNECTEZ TOUTES LES SOURCES D'ALIMENTATION ÉLECTRIQUE ET DISJONCTEURS. SUIVEZ À L'INSTANCE AVANT D'EFFECTUER L'ENTRETIEN.
FAUTE DE DÉCONNECTER LA SOURCE ÉLECTRIQUE AVANT D'EFFECTUER L'ENTRETIEN POURRAIT RÉSULTER EN BLESSURES CORPORELLES SÉVÈRES OU LA MORT.

⚠ CAUTION
USE COPPER CONDUCTORS ONLY!
UNIT TERMINALS ARE NOT DESIGNED TO ACCEPT OTHER TYPES OF CONDUCTORS. SO MAY CAUSE DAMAGE TO THE EQUIPMENT.

THIS DRAWING IS PROPRIETARY AND SHALL NOT BE COPIED OR ITS CONTENTS DISCLOSED TO OUTSIDE PARTIES WITHOUT THE WRITTEN CONSENT OF THE TRANE COMPANY

2307-5215 A

Figure 16
UCP2 Field Lay-Out Diagram
CVHE, CVHF, CVHG

PURPOSE: THIS DRAWING IS TO BE USED FOR ESTIMATING FIELD WIRING REQUIREMENTS.

NOTES:

1. DASHED LINES INDICATE FIELD WIRING BY OTHERS. CHECK SALES ORDER TO DETERMINE WHICH OPTIONS ARE SPECIFIED.
2. DO NOT ROUTE LOW VOLTAGE (30V MAX) WITH CONTROL VOLTAGE (115V) AND DO NOT POWER UNIT UNTIL CHECK-OUT AND START-UP PROCEDURES HAVE BEEN COMPLETED.
3. THE FOLLOWING OPTIONS ARE AVAILABLE, REFER TO MECHANICAL SPECIFICATION FOR DESCRIPTION:
   - <A> OPTIONS MODULE: REQUIRED W/FLAGGED FEATURES (REFER TO CONTROL SCHEMATICS)
   - <B> COMMUNICATIONS INTERFACE – COMM3 OR COMM4 (CONSULT SALES OFFICE FOR SELECTION)
   - <C> UNIT DISCONNECT, NON FUSED (STARTER OPTION)
   - <D> CHILLED WATER RESET-OUTDOOR AIR
4. EVAPORATOR AND CONDENSER FLOW SWITCHES ARE REQUIRED. THEY MUST BE INSTALLED AND WIRED TO THE TRANE PANEL BY THE INSTALLING CONTRACTOR. PURCHASE OF SWITCHES FROM TRANE IS OPTIONAL.

<5> AUXILIARY CONTROLS FOR A CUSTOMER SPECIFIED OR INSTALLED LATCHING TRIPOUT. THE CHILLER WILL RUN NORMALLY WHEN THE CONTACT IS CLOSED AND TRIP THE CHILLER OFF WITH A MANUALLY RESETTABLE DIAGNOSTIC WHEN THE CONTACT OPENS. MANUAL RESET IS ACCOMPLISHED AT THE DIAGNOSTIC KEY ON THE FRONT OF THE UNIT CONTROL PANEL (UCP2).

<6> AUXILIARY CONTROLS FOR A CUSTOMER SPECIFIED OR INSTALLED REMOTE AUTO/STOP FUNCTION. THE CHILLER WILL RUN NORMALLY WHEN THE CONTACT IS CLOSED AND STOP THE CHILLER WHEN THE CONTACT IS OPEN. RE-CLOSURE OF THE CONTACT WILL PERMIT THE CHILLER TO AUTOMATICALLY RETURN TO NORMAL OPERATION.

REQUIRED WIRING:

7. ALL CUSTOMER CONTROL CIRCUIT WIRING MUST HAVE A MINIMUM RATING OF 150 VOLTS.
8. ALL FIELD WIRING MUST BE IN ACCORDANCE WITH THE NATIONAL ELECTRICAL CODE (NEC), STATE AND LOCAL REQUIREMENTS. OUTSIDE THE UNITED STATES, OTHER COUNTRIES APPLICABLE NATIONAL AND/OR LOCAL REQUIREMENTS SHALL APPLY.

<9> THE UNIT CONTROL PANEL (UCP2) SUPPLIES A CONTACT OUTPUT TO CONTROL THIS CUSTOMER SUPPLIED DEVICE. MAXIMUM FUSE SIZE – 15 AMPS.

<10> COPPER WIRE ONLY – SIZED PER N.E.C. – BASED ON NAMEPLATE RATING.

<11> 2 WIRES, 115 VAC CIRCUIT. MINIMUM CONTACT RATING AT 115 VAC – 2.88 INDUCTIVE 1/3 H.P.

<12> 7 WIRES 2 – #10 AWG 600V, 4 – #16 AWG 600V, 1 – #8 GRN FOR GROUND

<13> 2 WIRES, 30 VOLT OR LESS CIRCUIT. DO NOT RUN WITH HIGHER VOLTAGE CIRCUITS.

<14> IF UNIT IS SUPPLIED WITH UNIT MOUNTED STARTER, FIELD WIRING BETWEEN UNIT AND STARTER IS NOT REQUIRED.

OPTIONAL WIRING:

<15> 3 WIRES, 115 VAC CIRCUIT, SEPARATE 115 VAC POWER SUPPLY IS REQUIRED. CONTACTS ARE NO/NC RATINGS – 2.88 INDUCTIVE 1/3 H.P. AT 115 VAC.

<16> 2 WIRES, 115 VAC CIRCUIT, SEPARATE POWER SUPPLY IS REQUIRED. CONTACTS ARE N.O. CONTACT RATING – 2.88 INDUCTIVE 1/3 H.P. AT 115 VAC.

<17> 2 WIRES, 30 VOLT OR LESS CIRCUIT. DO NOT RUN IN CONDUIT WITH HIGHER VOLTAGE CIRCUITS.

<18> SHIELDED PAIR, 30 VOLT OR LESS CIRCUIT. MAX LENGTH 5000 FT. BELDON TYPE 8760 RECOMMENDED.

<19> CUSTOMER SUPPLIED SILVER CONTACTS MUST BE COMPATIBLE WITH DRY CIRCUIT 24 VDC, 12mA RESISTIVE LOAD.

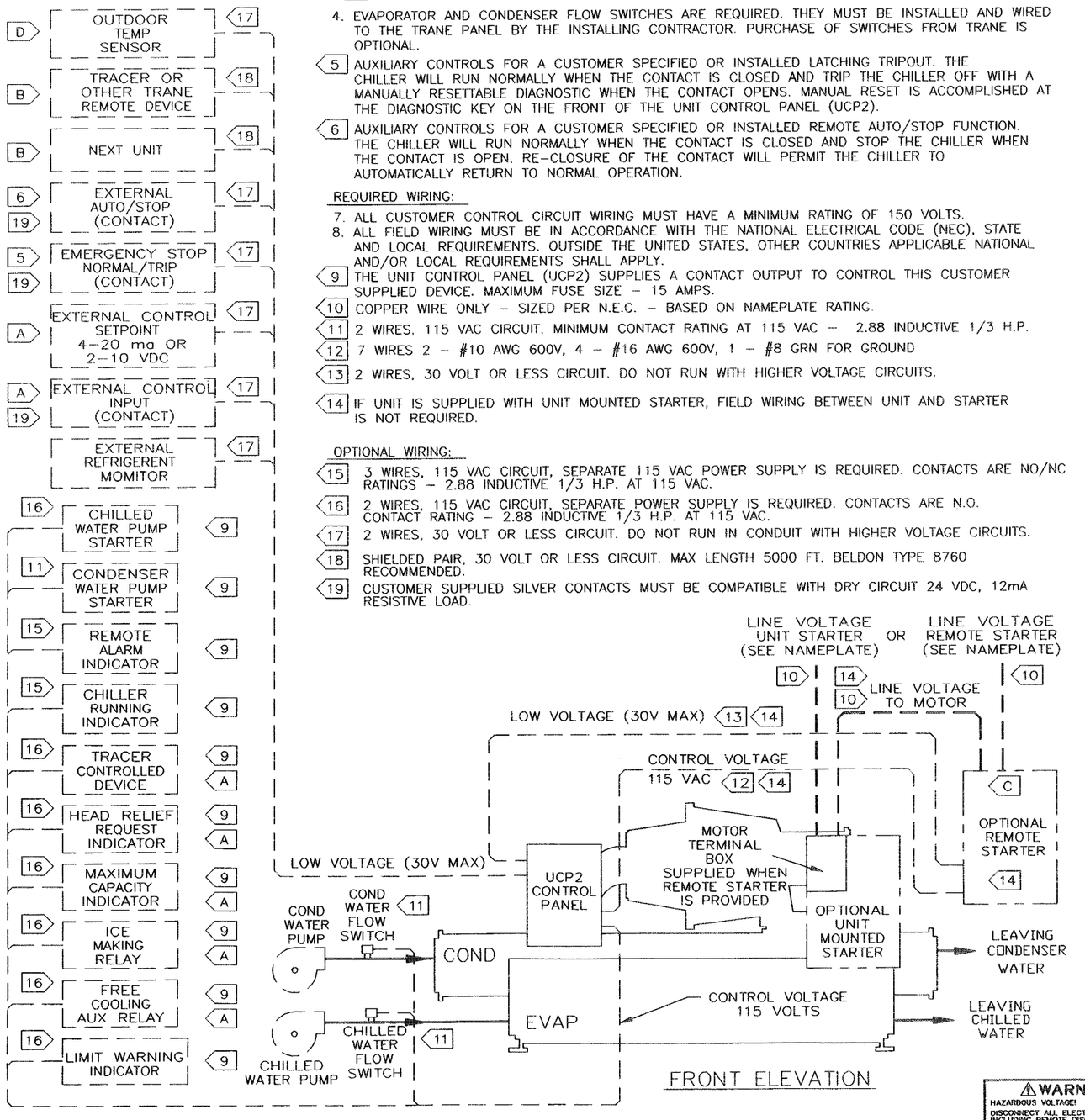

THIS DRAWING IS PROPRIETARY AND SHALL NOT BE COPIED OR ITS CONTENTS DISCLOSED TO OUTSIDE PARTIES WITHOUT THE WRITTEN CONSENT OF THE TRANE COMPANY

⚠ WARNING
HAZARDOUS VOLTAGE!
DISCONNECT ALL ELECTRIC POWER INCLUDING REMOTE DISCONNECTS BEFORE SERVICING.
FAILURE TO DISCONNECT POWER BEFORE SERVICING CAN CAUSE SEVERE PERSONAL INJURY OR DEATH.

⚠ AVERTISSEMENT
VOLTAGE HASARDEUX!
DECONNECTEZ TOUTES LES SOURCES ELECTRIQUES INCLUANT LES DISJONCTEURS SITUES A DISTANCE AVANT D'EFFECTUER L'ENTRETIEN.
FAUTE DE DECONNECTER LA SOURCE ELECTRIQUE AVANT D'EFFECTUER L'ENTRETIEN PEUT ENTRAINER DES BLESSURES CORPORELLES SEVERES OU LA MORT.

⚠ CAUTION
USE COPPER CONDUCTORS ONLY!
UNIT TERMINALS ARE NOT DESIGNED TO ACCEPT OTHER TYPES OF CONDUCTORS.
FAILURE TO DO SO MAY CAUSE DAMAGE TO THE EQUIPMENT.

Figure 17
Field Connection Wiring
CVHE, CVHF, CVHG

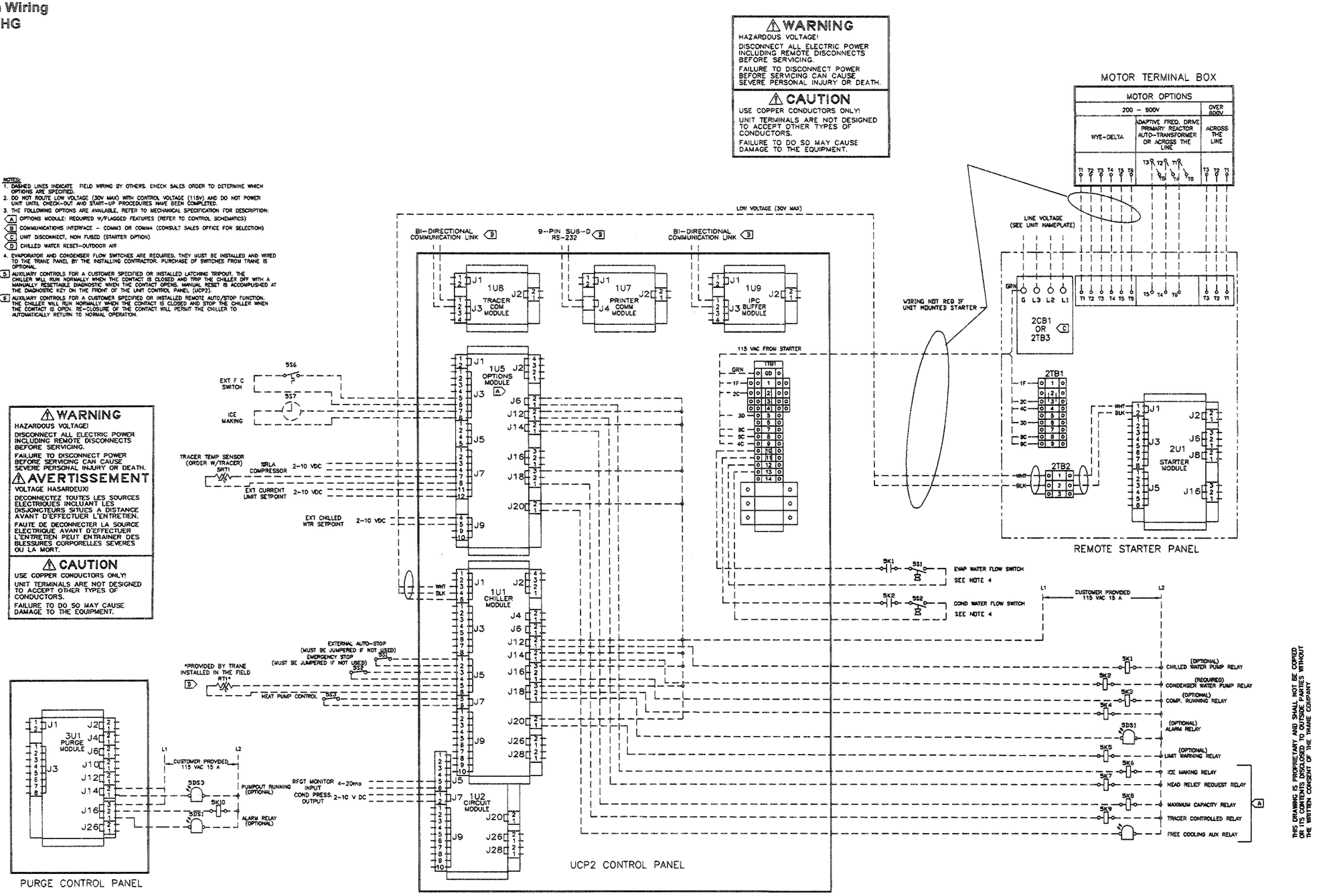

NOTES:
1. DASHED LINES INDICATE FIELD WIRING BY OTHERS. CHECK SALES ORDER TO DETERMINE WHICH OPTIONS ARE SPECIFIED.
2. DO NOT ROUTE LOW VOLTAGE (30V MAX) WITH CONTROL VOLTAGE (115V) AND DO NOT POWER UNIT UNTIL CHECK-OUT AND START-UP PROCEDURES HAVE BEEN COMPLETED.
3. THE FOLLOWING OPTIONS ARE AVAILABLE, REFER TO MECHANICAL SPECIFICATION FOR DESCRIPTION:
   - [A] OPTIONS MODULE: REQUIRED W/FLAGGED FEATURES (REFER TO CONTROL SCHEMATICS)
   - [B] COMMUNICATIONS INTERFACE – COMM3 OR COMM4 (CONSULT SALES OFFICE FOR SELECTION)
   - [C] UNIT DISCONNECT, NON FUSED (STARTER OPTION)
   - [D] CHILLED WATER RESET–OUTDOOR AIR
4. EVAPORATOR AND CONDENSER FLOW SWITCHES ARE REQUIRED. THEY MUST BE INSTALLED AND WIRED TO THE TRANE PANEL BY THE INSTALLING CONTRACTOR. PURCHASE OF SWITCHES FROM TRANE IS OPTIONAL.
5. AUXILIARY CONTROLS FOR A CUSTOMER SPECIFIED OR INSTALLED LATCHING TRIPOUT. THE CHILLER WILL RUN NORMALLY WHEN THE CONTACT IS CLOSED AND TRIP THE CHILLER OFF WITH A MANUALLY RESETTABLE DIAGNOSTIC WHEN THE CONTACT OPENS. MANUAL RESET IS ACCOMPLISHED AT THE DIAGNOSTIC KEY ON THE FRONT OF THE UNIT CONTROL PANEL (UCP2).
6. AUXILIARY CONTROLS FOR A CUSTOMER SPECIFIED OR INSTALLED REMOTE AUTO/STOP FUNCTION. THE CHILLER WILL RUN NORMALLY WHEN THE CONTACT IS CLOSED AND STOP THE CHILLER WHEN THE CONTACT IS OPEN. RE-CLOSURE OF THE CONTACT WILL PERMIT THE CHILLER TO AUTOMATICALLY RETURN TO NORMAL OPERATION.

⚠ WARNING
HAZARDOUS VOLTAGE!
DISCONNECT ALL ELECTRIC POWER INCLUDING REMOTE DISCONNECTS BEFORE SERVICING.
FAILURE TO DISCONNECT POWER BEFORE SERVICING CAN CAUSE SEVERE PERSONAL INJURY OR DEATH.
⚠ AVERTISSEMENT
VOLTAGE HASARDEUX!
DECONNECTEZ TOUTES LES SOURCES ELECTRIQUES INCLUANT LES DISJONCTEURS SITUES A DISTANCE AVANT D'EFFECTUER L'ENTRETIEN.
FAUTE DE DECONNECTER LA SOURCE ELECTRIQUE AVANT D'EFFECTUER L'ENTRETIEN PEUT ENTRAINER DES BLESSURES CORPORELLES SEVERES OU LA MORT.
⚠ CAUTION
USE COPPER CONDUCTORS ONLY!
UNIT TERMINALS ARE NOT DESIGNED TO ACCEPT OTHER TYPES OF CONDUCTORS.
FAILURE TO DO SO MAY CAUSE DAMAGE TO THE EQUIPMENT.

2307-5218 A

Figure 18
Field Connection Wiring - Starter by Others
CVHE, CVHF, CVHG

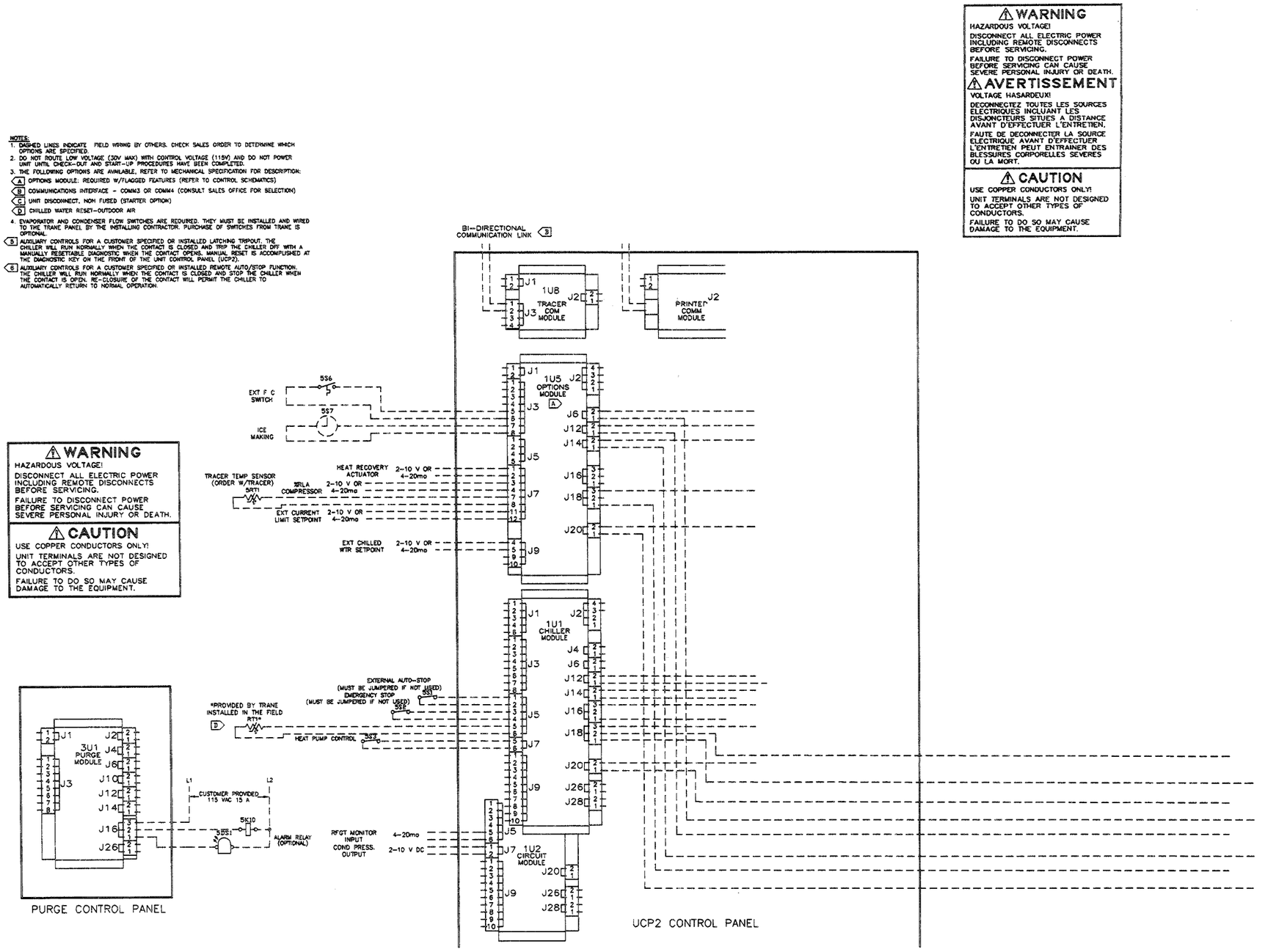

2307-5219 A

Figure 19
Remote Adaptive Frequency Drive
w/Solid State By-Pass
CVHE, CVHF, CVHG
UCP2 Schematic Wiring

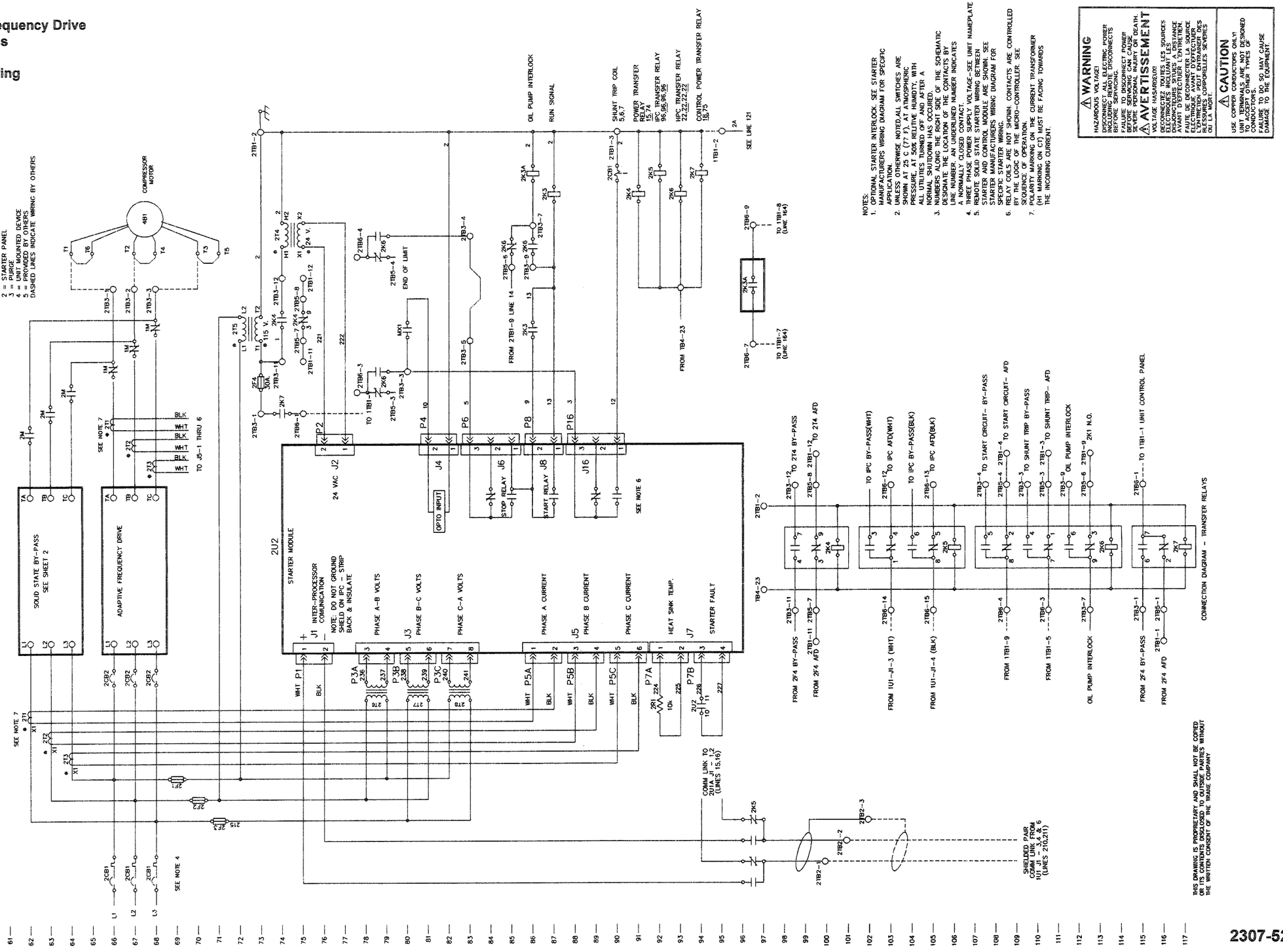

Figure 20
Solid State Inside the Delta
CVHE, CVHF, CVHG
UCP2 Schematic Wiring

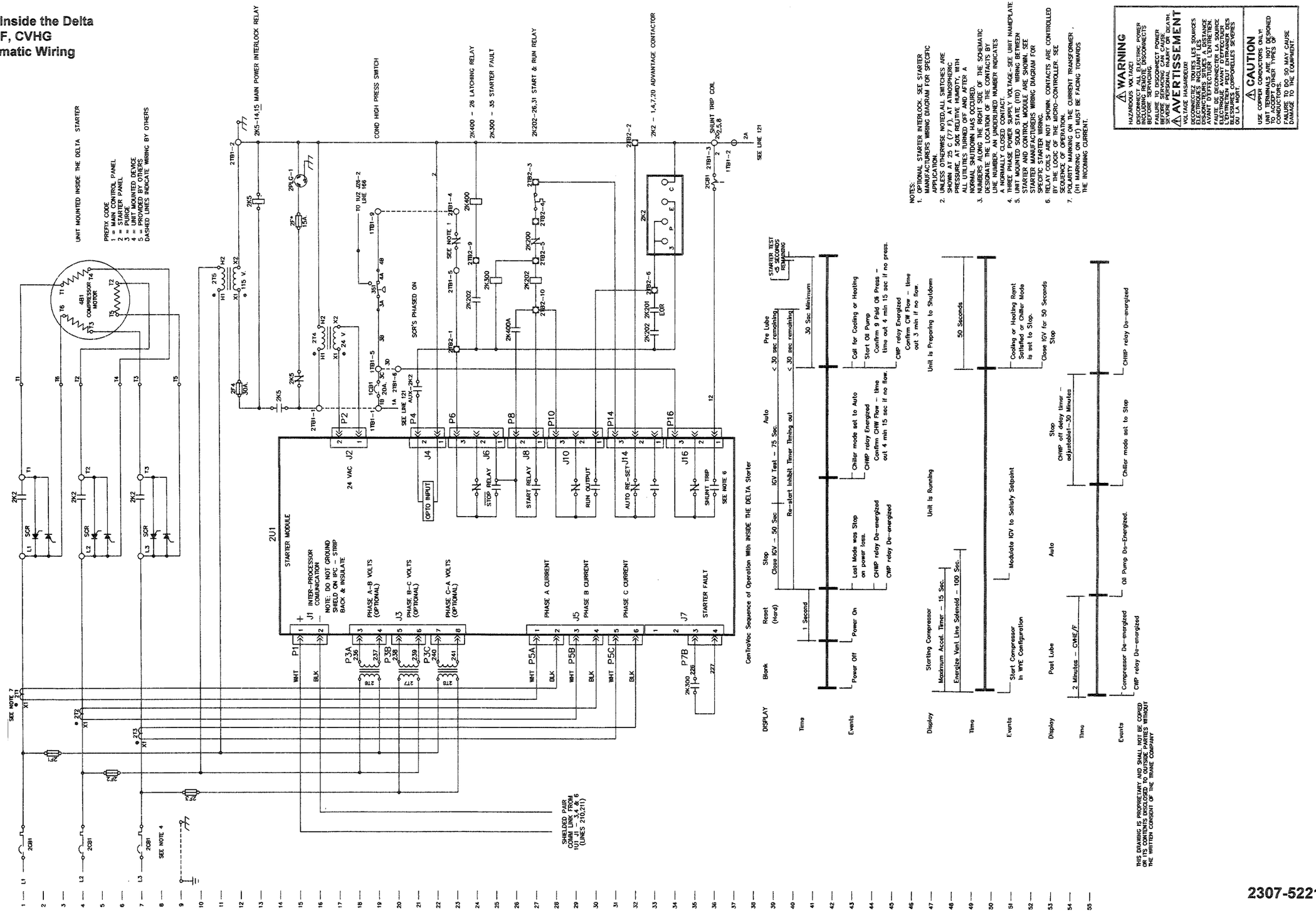

2307-5221 A

TRANE

Operation Maintenance

CDHF-OM-1B

Library	Service Literature
Product Section	Refrigeration
Product	Centrifugal Liquid Chillers
Model	CDHF
Literature Type	Operation/Maintenance
Sequence	1B
Date	July 31, 2000
File No.	SV-RF-CTV-CDHF-OM-1B-700
Supersedes	CDHF-OM-1A-5/98

Duplex Water-Cooled Hermetic CenTraVac®

CDHF, Design Sequence A0 through J0, 60 Hz Models 1500, 2000, 2100, 2500 (2 Stage)
CDHG, Design Sequence D0 through J0, 50 HZ Models 1250, 1750, 2150, (3 Stage)

Cooling-Only
Direct-Drive with UCP2 Control Panels

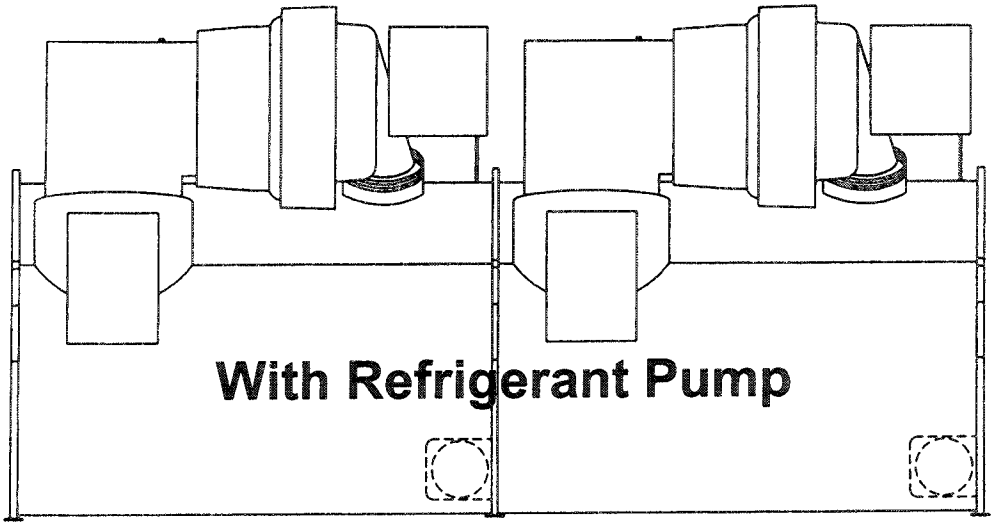

X39640472-03

Since the Trane Company has a policy of continuous product improvement, it reserves the right to change specifications and design without notice. The installation and servicing of the equipment referred to in this booklet should be done by qualified, experienced technicians.

NOTICE

Warnings and Cautions appear at appropriate locations throughout this manual.

Read these carefully.

Warning: Indicates a potentially hazardous situation which, if not avoided, could result in death or serious injury.

CAUTION: Indicates a potentially hazardous situation which, if not avoided, may result in minor or moderate injury. It may also be used to alert against unsafe practices and where property-damage only accidents could occur.

©American Standard 2000

Table of Contents

Subject	Page
Product Coding Definition	**5**
Introduction	5
Typical Product Description Block	5
CDHF/CDHG Product Coding Explanation	5
Control Options	8
Unit Options	9
Starter Options	9
Performance	10
General Information	**11**
About this Manual	11
Literature Change History	11
Product Description Block	11
Commonly Used Acronyms	11
Warnings and Cautions	11
Unit Nameplate	11
Metric Conversion	11
Mechanical Operation - CDHF	**12**
Overview	12
Cooling-Only Cycle	12
CDHF Units with Refrigerant Pump	13
Compressor Lubrication System for CDHF	13
Motor Cooling System	13
Chiller Control System	**17**
Unit Control Panel	17
Electrical Sequence of Operation	**18**
Overview	18
Chilled and Condenser Water Flow Interlock Circuits	20
UCP2 and "Wye-Delta" Starter Control Circuits	20
Duplex Chiller Loading Sequence	20
Duplex Unit UCP2 Displays and Diagnostic Description	21
Chiller Report Screen	21
Operator Settings	21
Service Settings	21
Diagnostic Descriptions	21
Vane Actuator Control	22
Unit Start-Up Procedures	22
Daily Unit Start-Up	22
Seasonal Unit Start-Up	23
Unit Shutdown Procedures	24
Daily Unit Shutdown	24
Seasonal Unit Shutdown	24
Trouble Analysis	25
Periodic Maintenance	**26**
Overview	26
Daily Maintenance and Checks	26
Weekly Maintenance	26
Every 3 Months	27

Table of Contents

Subject	Page
Off-Season Maintenance	27
Annual Maintenance	27
Compressor Oil Change	27
Oil Change Procedure	27
Replacing Oil Filter	28
Oil Filter Replacement Procedure	28
Other Maintenance Requirements	29
Lubrication	29
Refrigerant Charge	29
Recovery/Recylce Connections	32
Leak Testing	32
Cleaning the Condenser	32
Cleaning the Evaporator	32
Control Settings and Adjustments	32
Purge System	32
Forms	
CenTraVac with UCP2 Commissioning Checklist	36
Start-Up Test Log: Water Cool CenTraVac & Start-Up Test Log with UCP2 Control Panel	42
CenTraVac Checksheet and Request for Serviceman	44
Periodic Maintenance: Annual Inspection Check List and Report: CenTraVacs w/UCP2 Control Panels	45
Figure and Table Index	
Figure 1 "Illustrates the General Component Layout of a Typical CDHF Chiller"	14
Figure 2 "CDHF Pressure/Enthalpy Curve"	15
Figure 3 "CDHF Compressor Lubrication System"	16
Figure 4 ""Control Panel Layout"	17
Figure 5 "Rotary Valve in Drain Position"	30
Figure 6 Drum Bung Fitting with Quick Connect Coupling	31
Figure 7 "Chemical Cleaning Setup"	33
Table 1 "Diagnostics that relate to the Duplex Unit"	22
Table 2 "Normal Chiller Operating Characteristics"	26
Table 3 "Unit Time Delays and Safety Control Cutout Settings for UCP2"	34

Product Coding Definition

Introduction

The CDHF/CDHG is defined using the product definition and selection system. This system describes the product offerings in terms of a product coding block which is made up of feature categories and feature codes.

The operating components and options for any model CDHF or CDHG unit can be identified by referring to the alphanumeric product identification coding block located on the nameplate for the unit. The coding block precisely identifies all characteristics of a unit.

Typical Product Description Block

MODL CDHF	EVWA	CDCO FLNG	EVBS 2500
EVWC STD	CDBS 2500	PURG HERM	EVWC 150
EVCO FLNG	NTON 2500	SRT1 RPIR	HGBP W/O
DSEQ A0	CDWC 150	VOLT 460	

CDHF and CDHG Product Coding Explanation

MODL
Unit Model
CDHF = Duplex - 2 Stage Direct Drive
CDHG = Duplex - 3 Stage Direct Drive

DSEQ
Original Design Sequence - "JO"
Factory Assigned

HRTZ
Unit Hertz
50 = 50 Hertz
60 = 60 HertZ

NTON
Compressor Nominal Tonage
1250 = G Comp (2) - 670 Comp
1500 = F Comp (2) - 770 Comp
1750 = G Comp (2) - 780 Comp
2000 = F Comp (2) - 910 Comp
2100 = F Comp (2) - 1060 Comp
2150 = G Comp (2) - 1067 Comp
2500 = F Comp (2) - 1280 Comp

VOLT
Unit Voltage
3 Phase
380 = 380 Volt 60
380 = 380 Volt 50
400 = 400 Volt 50
415 = 415 Volt 50
440 = 440 Volt 60
460 = 460 Volt 60
480 = 480 Volt 60
575 = 575 Volt 60
600 = 600 Volt 60
2300 = 2300 Volt 60
2400 = 2400 Volt 60
3300 = 3300 Volt 60
3300 = 3300 Volt 50
4160 = 4160 Volt 60
6000 = 6000 Volt 50
6600 = 6600 Volt 50

CPM1
Compressor Motor Power LH
301 KW 50 Hz
337 KW 50 Hz
379 KW 50 Hz
403 KW 60 Hz
433 KW 50 Hz
453 KW 60 Hz
489 KW 50 Hz
512 KW 60 Hz
548 KW 50 Hz
588 KW 60 Hz
621 KW 50 Hz
653 KW 60 Hz
716 KW 50 HZ
745 KW 60 Hz
799 KW 50 Hz
856 KW 60 Hz
892 KW 50 Hz
957 KW 60 Hz
1062 KW 60 Hz
1228 KW 60 Hz

CPM2
Compressor Motor Power RH
301 KW 50 Hz
337 KW 50 Hz
379 KW 50 Hz
403 KW 60 Hz
433 KW 50 Hz
453 KW 60 Hz
489 KW 50 Hz
512 KW 60 Hz
548 KW 50 Hz
588 KW 60 Hz
621 KW 50 Hz
653 KW 60 Hz
716 KW 50 HZ
745 KW 60 Hz
799 KW 50 Hz
856 KW 60 Hz
892 KW 50 Hz
957 KW 60 Hz
1062 KW 60 Hz
1228 KW 60 Hz

CPD1
Compressor Impeller Diameter LH Circuit

255	293
256	294
257	295
258	296
259	297
260	298
261	299
262	300
263	301
264	302
265	303
266	304
267	305
268	306
269	307
270	308
271	309
272	310
273	311
274	312
275	313
276	314
277	315
278	316
279	317
280	318
281	319
282	320
283	321
284	322
285	323
286	324
287	325
288	326
289	327
290	328
291	329
292	330

Product Coding Definition

CPD2
Compressor Impeller Diameter RH Circuit

255	294
256	295
257	296
258	297
259	298
260	299
261	300
262	301
263	302
264	303
265	304
266	305
267	306
268	307
269	308
270	309
271	310
272	311
273	312
274	313
275	314
276	315
277	316
278	317
279	318
280	319
281	320
282	321
283	322
284	323
285	324
286	325
287	326
288	
289	327
290	328
291	329
292	330
293	

ECTY
Economizer Orfice Type

WEOR
Welded Orifice Ecom Cdhg

EVSZ
Evaporator Size
210D = 2100 Duplex evaporator size
250D = 2500 Duplex evaporator size

EVBS
Evaporator Tube Bundle Size Nominal Ton Evaporator
1610 2300
1850 2500
2100

EVTM
Evaporator Tube Material
TECU 3/4" Internally enhanced cu. tubing
SBCU 3/4" Smooth bore cu. tubing
IECU 1" Internally enhanced cu. tubing

EVTH
Evaporator Tube Thickness
.028" Tube wall thickness evap.
.035" Tube wall thickness evap.

EFLD
Evaporator Fluid Type
Wate = Water
CLCA = Fluid type = Calcium
Eg = Fluid type = Glycol
Pg = Fluid Type = Propylene Glycol

EVWT
Evaporator Water Box Type
Mar = Marine water box evap.
NMAR = Non-marine water box

EVWP
Evaporator Water Box
One pass water box evap.
Two pass water box evap.

EVWC
Evaporator Water Box Construction
Standardwater box construction

EVPR
Evaporator Water Box Pressure
150 PSIG evap. water pressure
300 PSIG evap. water pressure

EVCO
Evaporator Water Box Connection
VICT = Victaulic
FLNG = Flanged
WFLG = Welded flange connection

EVWA
Evaporator Water Box Arrangement
LFRF = In - LH Front
LFRF = Out - RH Front

RFLF = In - RH Front
RFLF = Out -LH Front

LRRR = In - LH Rear
LRRR = Out - RH Rear

RRLR = In - RH Rear
RRLR = Out - LH Rear

LFRR = In - LH Front
LFRR = Out - RH Rear

RFLR = In - RH Front
RFLR = Out - LH Rear

LRRF = In - LH Rear
LRRF = Out - RH Front

RRLF = In - LH Rear
RRLF = Out - LH Front

RELE = In - RH End
RELE = Out - LH End

LERE = In - LH End
LERE = Out RH End

CDSZ
Condenser Size
210D = 2100 Duplex Shell condenser size
250D = 2500 Duplex Condenser Size

CDBS
Condenser Tube Bundle Size
1610 Nominal ton cond.
1760 Nominal ton cond.
1900 Nominal ton cond.
2100 Nominal ton cond.
2300 Nominal ton cond.
2500 Nominal ton cond.
1151 Nominal ton cond.

CDTM
Condenser Tube Material
TECU = 3/4" Internally enhanced cu. tubes
SBCU = 3/4" Smooth bore cu. tubes
IECU = 1" Internally enhanced cu. tubes

CDTH
Condenser Tube Wall Thickness
28 = .028 Cond. tube wall thickness
35 = .035 Cond. tube wall thickness

CFLD
Condenser Fluid Type
WATE = Water
CLCA = Calcium Chloride
Eg = Fluid type = Glycol
Pg = Fluid type = Propylene Glycol

Product Coding Definition

CDWT
Condenser Water Box Type
Mar = Marine
NMar = Non-Marine CDS Water Box

CDWC
Condenser Water Box
Std = Cond. water box standard construction

CDPR
Condenser Water Side Pressure
150 PSIC cond. water pressure
300 PSIG cond. water pressure

CDCO
Condenser Water Box Connection
VICT = Victaulic
FLNG = Flanged
WFLG = Welded flange connection

CDWA
Condenser Water Box Arrangement
LFRF = In - LH Front
LFRF = Out - RH Front

RFLF = In - RH Front
RFLF = Out - LH Front

LRRR = In - LH Rear
LRRR = Out - RH Rear

RRLR = In - RH Rear
RRLR = Out - LH Rear

LTRT = In - L.H. Top
LTRT = Out - RH Top

RTLT = In - RH Top
RTLT = Out - LH Top

LBRB = In - LH Bottom
LBRB = Out - RH Bottom

RBLB = In - RH Bottom
RBLB = Out - LH Bottom

LFRR = In - LH Front
LFRR = Out - RH Rear

LFRT = In - LH Front
LFRT = Out - RH Top

LFRB = In - LH Front
LFRB = Out - RH Bottom

RFLR = In - RH Front
RFLR = Out - LH Rear

RFLT = In - RH Front
RFLT = Out - LH Top

RFLB = In - RH Front
RFLB = Out - LH Bottom

LRRF = In - LH Rear
LRRF = Out - RH Front

LRRT = In - LH Rear
LRRT = Out - RH Top

LRRB = In - LH Rear
LRRB = Out - RH Bottom

RRLF = In - RH Rear
RRLF = Out - LH Front

RRLT = In - RH Rear
RRLT = Out - LH Top

RRLB = In - RH Rear
RRLB = Out - LH Bottom

LTRF = In - LH Top
LTRF = Out - RH Front

LTRR = In -Top
LTRR = Out - RH Rear

LTRB = In - LH Top
LTRB = Out - RH Bottom

RTLF = In - RH Top
RTLF = Out - LH Front

RTLR = In - RH Top
RTLR = Out - LH Rear

RTLB = In - RH Top
RTLB = Out - LH Bottom

LBRF = In - LH Bottom
LBRF = Out - RH Front

LBRR = In - LH Bottom
LBRR = Out - RH Rear

LBRT = In - LH Bottom -
LBRT = Out - RH Top

RBLF = In - RH Bottom Outlet
RBLF = Out - LH Front

RBLR = In - RH Bottom
RBLR = Out - LH Rear

RBLT = In - RH Bottom
RBLT = Out - LH Top

RRRR = In - RH Rear
RRRR = Out - RH Rear

RELE= In - RH End
RELE = Out - LH End

LELE = In -L.H. End
LELE = Out - R.H. End

FT22 = Frt In/Out - 22.5 Degree

RR22 = Rear Inlet/Outlet - 22.5 Degree

ORC1
Orifice Size - LH Circuit
2 Stage "F" Compressor
500 = 500 Nominal ton orifice
560 = 560 Nominal ton orifice
630 = 630 Nominal ton orifice
710 = 710 Nominal ton orifice
750 = 750 Nominal ton orifice
790 = 790 Nominal ton orifice
880 = 880 Nominal ton orifice
935 = 935 Nominal ton orifice
990 = 990 Nominal ton orifice
1045 = 1045 Nominal ton orifice
1100 = 1100 Nominal ton orifice
1185 = 1185 Nominal ton orifice
1265 = 1265 Nominal ton orifice
1335 = 1335 Nominal ton orifice
1400 = 1400 Nominal ton orifice
1475 = 1475 Nominal ton orifice
1540 = 1540 Nominal ton orifice
1605 = 1605 Nominal ton orifice
1660 = 1660 Nominal ton orifice
1735 = 1735 Nominal ton orifice
1810 = 1810 Nominal ton orifice
1890 = 1880 Nominal ton orifice
1970 = 1970 Nominal ton orifice
2060 = 2060 Nominal ton orifice
2150 = 2150 Nominal ton orifice

ORC1
Orifice Size - LH Circuit
3 Stage "G" Compressor
500 = 500 Nominal ton orifice

Product Coding Definition

560 = 560 Nominal ton orifice
630 = 630 Nominal ton orifice
710 = 710 Nominal ton orifice
750 = 750 Nominal ton orifice
800 = 800 Nominal ton orifice
835 = 835 Nominal ton orifice
880 = 880 Nominal ton orifice
900 = 900 Nominal ton orifice
935 = 935 Nominal ton orifice
990 = 990 Nominal ton orifice
1000 = 1000 Nominal ton orifice
1045 = 1045 Nominal ton orifice
1120 = 1120 Nominal ton orifice
1185 = 1185 Nominal ton orifice
1250 = 1250 Nominal ton orifice
1265 = 1265 Nominal ton orifice
1335 = 1335 Nominal ton orifice
1400 = 1400 Nominal ton orifice
1475 = 1475 Nominal ton orifice
1540 = 1540 Nominal ton orifice
1600 = 1600 Nominal ton orifice
1605 = 1605 Nominal ton orifice
1735 = 1735 Nominal ton orifice
1800 = 1800 Nominal ton orifice
1810 = 1810 Nominal ton orifice
1890 = 1890 Nominal ton orifice
1970 = 1970 Nominal ton orifice
2060 = 2060 Nominal ton orifice
2150 = 2151 Nominal ton orifice

ORC2
Orifice Size - RH Circuit
2 Stage "F" Compressor
500 = 500 Nominal ton orifice
630 = 630 Nominal ton orifice
710 = 710 Nominal ton orifice
750 = 750 Nominal ton orifice
790 = 790 Nominal ton orifice
800 = 800 Nominal ton orifice
835 = 835 Nominal ton orifice
880 = 880 Nominal ton orifice
935 = 935 Nominal ton orifice
990 = 990 Nominal ton orifice
1000 = 1000 Nominal ton orifice
1045 = 1045 Nominal ton orifice
1100 = 1100 Nominal ton orifice
1120 = 1120 Nominal ton orifice
1185 = 1185 Nominal ton orifice
1265 = 1265 Nominal ton orifice
1335 = 1335 Nominal ton orifice
1400 = 1400 Nominal ton orifice
1475 = 1475 Nominal ton orifice
1540 = 1540 Nominal ton orifice
1600 = 1600 Nominal ton orifice
1605 = 1605 Nominal ton orifice
1660 = 1660 Nominal ton orifice
1735 = 1735 Nominal ton orifice
1800 = 1800 Nominal ton orifice
1810 = 1810 Nominal ton orifice
1890 = 1890 Nominal ton orifice
1970 = 1970 Nominal ton orifice
2060 = 2060 Nominal ton orifice
2150 = 2150 Nominal ton orifice

ORC2
Orifice Size - RH Circuit
3 Stage "G" Compressor
500 = 500 Nominal ton orifice
560 = 560 Nominal ton orifice
630 = 630 Nominal ton orifice
710 = 710 Nominal ton orifice
800 = 800 Nominal ton orifice
900 = 900 Nominal ton orifice
1000 = 1000 Nominal ton orifice
1045 = 1045 Nominal ton orifice
1000 = 1000 Nominal ton orifice
1120 = 1120 Nominal ton orifice
1250 = 1250 Nominal ton orifice
1400 = 1400 Nominal ton orifice
1600 = 1600 Nominal ton orifice
1660 = 1660 Nominal ton orifice
1735 = 1735 Nominal ton orifice
1800 = 1800 Nominal ton orifice

AGLT
Agency Listing
None = No Agency Listing
UL = U.L. Listed
CUL = UL listed with energy efficiency verification
CLCA = California Code includes U.L. Listing

Test
Factory Performance Test
Air = Air Run and Vibration
CWTR = Customer Witness
CWT1 = Customer Witness/1 Part Load
CWT2 = Customer Witness/2 Part Load
CWT3 = Customer Witness/3 Part Load
CWTS = Customer Witness/with Sound
CWS1 = Customer Witness/Sound Part 1 Load
CWS2 = Customer Witness/Sound Part 2 Load
CWS3 = Customer Witness/Sound Part 3 Load
PTR = Performance Only/with Report
PTR1 = Performance Only/1 Part Load
PTR2 = Performance Only/2 Part Load
PTR3 = Performance Only/3 Part Load
PTRS = Performance Only/with Sound
PRS1 = Performance Only/Sound 1 Part Load
PRS2 = Performance Only/Sound 2 Part Load
PRS3 = Performace Only/Sound 3 Part Load
PTSP = Performance Only test special

WCNM
SNMP = Mylar (plastic logo)
BNMP = Brass logo
BNMC = Brass logo customer witness test
INTL = International mylar logo

SPKG
Shipping Package
DOM = Domestic shipping package
EXP = Export shipping package
EXPS = Export shipping package w/out skid

AAZ
International Package
Yes = International package

JAGA
Yes = Control Panel Gauges for Japan

Control Options

CLDC
Complex Language Display
Yes = Complex Character CLD

OPTM
Options Module
YES = Option Module

MONP
Monitoring Package
YES = Monitoring Package

RCLM
Remote Clear Language Panel
RCLP = Remote Clear Language
RHIN = Remote Clear Language Interface
RCLB = Remote Clear Language Display

WPSR
Chilled Tower Water Flow Display
WFCH = Water Pressure Sensors >150 PSI
WFCL = Water Pressure Sensors <150 PSI

TRMM
Tracer Interface Module
TRMI = Tracer 100 Interface
TRMS = Tracer Summit Interface

Product Coding Definition

BRTS
Bearing Oil Temperature Sensors
YES = Bearing Oil Temperature

CLCT
Condenser Limit Controls
YES = Condenser Limit Controls

CWR
Chilled Water Reset Ambient
YES = Chilled Water Reset Ambient

WVUO
Phase Voltage Sensors
YES = Phase Voltage Sensors

DIST
Discharge Temperature Sensor
YES = Discharge Temperature Sensor

PNCH
Printer Interface Module
YES = Printer Interface Module

UMRM
Unit Mounted Refrigerant Monitor
MNOR = w/o scanner
MNSC = w/scanner
MNAA = w/o scanner & alarm
MSAA = w/scanner & alarm
MNAF = w/o scanner & alarm & 1 lite
MSAF = w/scanner & alarm& 1 lite
MNAT = w/o scanner & alarm & 3 lite
MSAT = w/scanner & alarm& 3 lite

Unit Options

INSL
YES = Unit Insulation Package

ISLS
YES = Spring Isolators

FLSN
Flow Switches NEMA
FS1 = 1 flow switch 150 psi NEMA 1
2FS1 = 2 flow switches 150 psi
3FS1 = 3 flow switches 150 psi NEMA 1
FS2 = 1 flow switch 300 psi NEMA 1
2FS2 = 2 flow switches 300 psi NEMA 1
3FS2 = 3 flow switches 300 psi NEMA 1

FLSV
Flow Switches Vapor
FS3 = 1 flow switch 150 PSI vapor
2FS3 = 2 flow switches 150 PSI vapor
3FS3 = 3 flow switches 150 PSI vapor
FS4 = 1 flow switch 300 PSI vapor
2FS4 = 2 flow switches 300 PSI vapor
3FS4 = 3 flow switches 300 PSI vapor

THRM
Thermometers
TME = 1 Thermometer 10" extd. well
2TME = 2 Thermometers 10" extd. well
3TME = 3 Thermometers 10" extd. well
TMS = 1 Thermometer 10" extd. well
2TMS = 2 Thermometers 10" extd. well
3TMS = 3 Thermometers 10" extd. well

TIMR
TIMERS
TR5 = 1 TR5 timer
2TR5 = 2 TR5 timers
3TR5 = 3 TR5 timers

Starter Options

SRT1
Starter Type - LH Circuit
USTR = Unit Mounted Star-Delta
USOL = Unit Mounted Solid State
RSTR = Remote Mounted Star Delta
RSOL = Remote Mounted Solid State
RXL = X-Line Full Volt
RATR = Auto Transformer
RPIR = Primary Reactor
CSTR = Customer Supplied Star-Delta
CSOL = Customer Supplied Solid State
CXL = X-Line Full Volt
CATR = Auto Transformer
CPIR = Primary Reactor
USID = Solid State Starter Unit Mount
FSID = Solid State Starter Floor Mount
WSID = Solid State Starter Wall Mount

SRT2
Starter Type - RH Circuit
USTR = Unit Mounted Star-Delta
USOL = Unit Mounted Solid State
RSTR = Remote Mounted Star-Delta
RSOL = Remote Mounted Solid State
RXL = X-Line Full Volt
RATR = Auto Transformer
RPIR = Primary Reactor
CSTR = Customer Supplied Star-Delta
CSOL = Customer Supplied Solid State
CXL = X-Line Full Volt
CATR = Auto Transformer
CPIR = Primary Reactor
USID = Solid State Starter Unit Mount
FSID = Solid State Starter Floor Mount
WSID = Solid State Starter Wall Mount

SRL1
Starter Current Transformer - LH Circuit
94 = 94 Max Starter RLA
187 = 187 Max Starter RLA
346 = 346 Max Starter RLA
360 = 360 Max Starter RLA
372 = 372 Max Starter RLA
553 = 553 Max Starter RLA
592 = 592 Max Starter RLA
606 = 606 Max Starter RLA
700 = 700 Max Starter RLA
935 = 935 Max Starter RLA
1080 = 1080 Max Starter RLA
1212 = 1212 Max Starter RLA
1402 = 1402 Max Starter RLA
1856 = 1856 Max Starter RLA
USID = Solid State Starter Unit Mount
FSID = Solid State Starter Floor Mount
WSID = Solid State Starter Wall Mount

SRL2
Starter Current Transformer - RH Circuit
94 = 94 Max Starter RLA
187 = 187 Max Starter RLA
346 = 346 Max Starter RLA
372 = 372 Max Starter RLA
553 = 553 Max Starter RLA
592 = 592 Max Starter RLA
606 = 606 Max Starter RLA
700 = 700 Max Starter RLA
935 = 935 Max Starter RLA
1080 = 1080 Max Starter RLA
1212 = 1212 Max Starter RLA
1402 = 1402 Max Starter RLA
1856 = 1856 Max Starter RLA

Product Coding Definition

PNC1
Panel Connection - LH Circuit
TERM = Terminal Block Connection
DISC = Disconnect Switch - Non Fused
CB = Circuit Breaker
CBIC = Circuit Breaker High Interrupt
CBHC = Circuit Breaker Higher Interrupt
CBCL = Circuit Breaker Current Limiting
ISSW = Isolation Switch
ISLB = Load Break Switch

PNC2
Panel Connection - RH Circuit
TERM = Terminal Block Connection
DISC = Disconnect Switch - Non Fused
CB = Circuit Breaker
CBIC = Circuit Breaker High Interrupt
CBHC = Circuit Breaker Higher Interrupt
CBCL = Circuit Breaker Current Limiting
ISSW = Isolation Switch
ISLB = Load Break Switch

SPC1
Panel Connection Maximum RLA - RH Circuit
346 = 346 Max Connection RLA
360 = 360 Max Connection RLA
432 = 432 Max Connection RLA
444 = 444 Max Connection RLA
467 = 467 Max Connection RLA
480 = 480 Max Connection RLA
518 = 518 Max Connection RLA
553 = 553 Max Connection RLA
592 = 592 Max Connection RLA
606 = 606 Max Connection RLA
640 = 640 Max Connection RLA
700 = 700 Max Connection RLA
740 = 740 Max Connection RLA
935 = 935 Max Connection RLA
960 = 960 Max Connection RLA
1080 = 1080 Max Connection RLA
1111 = 1111 Max Connection RLA
1185 = 1185 Max Connection RLA
1212 = 1212 Max Connection RLA
1402 = 1402 Max Connection RLA
1480 = 1480 Max Connection RLA
1856 = 1856 Max Connection RLA

SPC2
Panel Connection Maximum RLA-LH
346 = 346 Max Connection RLA
360 = 360 Max Connection RLA
432 = 432 Max Connection RLA
444 = 444 Max Connection RLA
467 = 467 Max Connection RLA
480 = 480 Max Connection RLA
518 = 518 Max Connection RLA
553 = 553 Max Connection RLA
592 = 592 Max Connection RLA
606 = 606 Max Connection RLA
640 = 640 Max Connection RLA
700 = 700 Max Connection RLA
740 = 740 Max Connection RLA
935 = 935 Max Connection RLA
960 = 960 Max Connection RLA
1080 = 1080 Max Connection RLA
1111 = 1111 Max Connection RLA
1185 = 1185 Max Connection RLA
1212 = 1212 Max Connection RLA
1402 = 1402 Max Connection RLA
1480 = 1480 Max Connection RLA
1856 = 1856 Max Connection RLA

AGLS
Remote Mounted Starter Agency Listing
None = No Agency Listing
UL = UL. Listed
CUL = UL. listed with energy efficiency verification
CLCA = California Code includes U.L. Listing

SFC1
Power Factor CorrectionCap LH Circuit
YES = PFCC correct to 93.5 to 95.5%.
Special KVAR Size

SFC2
Power Factor Correction Factor R.H Circuit
Yes = PFCC correct to 93.5 to 95.5%.
Special KVAR Size

DMPP
Digital Meter and Protection Package
IQD = I.Q. Data
4130 = I.Q. DP4130

SRLT
Surge Protector and Lighting Arrester
Yes = Surge Protector and Lighting Arrester

UNVR
Under/Over Voltage Relay
YES = Under/Over Voltage Relay

GRDF
Ground Fault Protection
YES = Ground Fault Protection

SRMT
Control Meters
CTRB = Volt and Amp Meters
CTRV = Volt
CTRA = Amp Meters

Performance

LCKW = LH Circuit Nameplate KW
RCKW = RH Circuit Nameplate KW
LCRA = LH Circuit Nameplate RLA
RCRA = RH Circuit Nameplate RLA
PTON = Tons of Refrigeration
PCKW = Performance KW
LRLA = LH Circuit Rated Load Amp
RRLA = RH Circuit Rated Load Amp
PTIE = Evap. Entering Water Temp.
PTOE = Evap. Leaving Water Temp.
PGME = Evap. Gallons per Minute
PPDE = Evap. Pressure Drop
PFFE = Evap. Fouling Factor
ECON = Evap. Fluid Concentration
PTIC = Cond. Entering Water Temp.
PTOC = Cond. Leaving Water Temp.
PGMC = Cond. Gallons per Minute
PPDC = Cond. Pressure Drop
PFFC = Cond. Fouling Factor
CCON = Cond. Fluid Concentraton

General Information

About this Manual

Literature Change History

CDHF-OM-1 = March, 1997

CDHF-OM-1A = May, 1998

CDHF-OM-1B = July, 2000

This manual contains information which describes the new refrigerant pump oil tank. It also includes operation and maintenance information of CDHF 60 Hz and CDHG 50 Hz. chillers equipped with microcomputer based controls systems. Throughout the manual reference is made to the CDHF model, but the information covered includes CDHG chillers as well.

By carefully reviewing the information in this manual and by following the instructions, the owner and operator can successfully operate and maintain a CDHF or CDHG chiller.

Important:
Diagnostic information pertaining to this chiller can be found in the Clear Language Display manual which shipped with the unit. If mechanical problems do occur, however, contact a qualified service organization to ensure proper diagnosis and repair of the unit.

Product Description Block

Trane 60 Hz. model CDHF units are defined by the product definition and selection system (PDS). Each unit is defined by the product description block which appears on the unit nameplate.

Commonly Used Acronyms

ASME = American Society of Mechanical Engineers
ASHRAE = American Society of Heating, Refrigerant and Air Conditioning Engineers

BA = Building Automation System
LBU = La Crosse Business Unit

CABS = Auxiliary Condenser Tube-Bundle Size
CDBS = Condenser Bundle Size

CDSZ = Condenser Shell Size
CWR = Chilled Water Reset

DCM = Duplex Control Module
DTFL = Delta-T at Full Load (i.e., the difference between entering and leaving chilled water temperatures at design load).

EVBS = Evaporator Bundle Size
EVSZ = Evaporator Shell Size

GPM = Gallons-per-Minute
HVAC = Heating, Ventilating, and Air Conditioning

IE = Internally Enhanced Tubes
IPC = Interprocessor Communication

PFCC = Power Factor Correction Capacitor
PSID = Pounds-per-Square-Inch (differential pressure)

PSIG = Pounds-per-Square-Inch (gauge pressure)

UCP2 = Chiller Control Panel for CenTraVacs

Warnings and Cautions

Notice that WARNINGS and CAUTIONS appear at appropriate intervals throughout this manual. WARNINGS are provided to alert operators of potential hazards that could result in personal injury or death, while CAUTIONS are designed to alert personnel to conditions that could result in equipment damage.

Your personal safety and the proper operation of this machine depend upon the strict observance of these precautions.

Unit Nameplate

The CDHF unit nameplate is located on the left side of the left hand unit control panel (UCP). A typical unit nameplate is illustrated in the installation manual, CDHF-IN-1A or latest revision. The following information is provided on the unit nameplate.

- Unit Model and Size Descriptor
- Unit Serial Number
- Unit Electrical Requirements
- Correct Operating Charge and Type of Refrigerant.
- Unit Test Pressures and Maximum Operating Pressures
- Unit Installation and Operation/ Maintenance manuals
- Product Description Block (Identifies all unit components and unit "Design Sequence" used to order literature and make other inquiries about the unit).

Metric Conversion

The following conversions apply for tables and charts in this manual,

In. x 2.54 = cm.
Ft. x 30.48 = cm.
Lb. x .453 = kg.

Mechanical Operation - CDHF

Overview

The following description applies to the duplex centrifugal chiller only. Refer to the appropriate operation manual for refrigeration cycle descriptions of other models.

Each CDHF unit is composed of basic components.

- The Evaporator
- 2 Stage Compressor (2 ea.)
- Water-Cooled Condenser
- Single-Stage Economizer (2 ea.)
- Related Interconnecting Piping

Important: The text of this manual describes a single refrigeration circuit. Please note that the Duplex, in reality, has TWO independent circuits.

Figure 1 illustrates the general component layout of a typical CDHF chiller.

The duplex unit has two CDHF compressors on independent evaporator and condenser circuits. Control is accomplished by a duplex control module (DCM) as explained in the "Electrical Sequence of Operation" section of this manual.

Cooling-Only Cycle

When the CDHF is functioning in the cooling mode, liquid refrigerant is distributed along the length of the evaporator and sprayed through small holes in a distributor (i.e., running the entire length of the shell) to uniformly coat each evaporator tube. Here, the liquid refrigerant absorbs enough heat from the system water circulating through the evaporator tubes to vaporize.

The gaseous refrigerant is then drawn through the eliminators (which remove droplets of liquid refrigerant from the gas), first-stage variable inlet guide vanes, and into the first-stage impeller.

Note: Inlet guide vanes are designed to modulate the flow of gaseous refrigerant to meet system capacity requirements; they also prerotate the gas allowing it to enter the impeller at an optimal angle that maximizes efficiency at all conditions.

Compressed gas from the first-stage impeller is discharged through the second-stage variable guide vanes and into the second-stage impeller. Here, the refrigerant gas is again compressed, and then discharged into the condenser.

Baffles within the condenser shell distribute the compressed refrigerant gas evenly across the condenser tube bundle. Cooling tower water, circulated through the condenser tubes, absorbs heat from the refrigerant, causing it to condense. The liquid refrigerant then flows out of the bottom of the condenser, passing through an orifice plate and into the economizer.

The economizer reduces the energy requirements of the refrigeration cycle by eliminating the need to pass all gaseous refrigerant through both stages of compression. See Figure 2. Notice that some of the liquid refrigerant flashes to a gas because of the pressure drop created by the orifice plate, thus further cooling the liquid refrigerant. This flash gas is then drawn directly from the economizer into the second-stage impeller of the compressor. All remaining liquid refrigerant flows out of the economizer, passes through another orifice plate and into the evaporator.

CDHF Units with Refrigerant Pump

Compressor Lubrication System for CDHF

A schematic diagram of the compressor refrigerant and oil lubrication system is illustrated in Figure 3 for the CDHF.

Oil is pumped from the oil tank through an oil pressure-regulating valve designed to maintain a net oil pressure of 18 to 22 psig. It is than filtered and sent to the oil cooler and on to the bearings.

From the bearings, the oil drains back to the manifold under the motor and then on to the oil tank.

⚠ WARNING
SURFACE TEMPERATURES MAY EXCEED 150°F USE CAUTION WHILE WORKING ON CERTAIN AREAS OF THE UNIT, failure to do so may result in death or personal injury.

To ensure proper lubrication and prevent refrigerant from condensing in the oil tank, a 750-watt heater is immersed in the oil tank and is used to warm the oil while the unit is off. When the unit starts, the oil heater is de-energized. This heater energizes as needed to maintain 140°F to 145°F (60 to 63°C) when the chiller is not running. When the chiller is operating, the temperature of the oil tank is typically 115°F to 160°F (46 to 72°C). The oil return lines from the thrust and journal bearings, transport oil and some seal leakage refrigerant. The oil return lines are routed into a manifold under the motor. Gas flow exits the top of the manifold and is vented to the Evaporator.

A vent line solenoid is not needed with the refrigerant pump. Oil exits the bottom of the manifold and returns to the tank. Separation of the seal leakage gas in the manifold keeps this gas out of the tank.

A dual eductor system is used to reclaim oil from the suction cover and the evaporator, and deposit it back into the oil tank. These eductors use high-pressure condenser gas to draw the oil from the suction cover and evaporator back to the eductors and then discharged into the oil tank. The evaporator deductor line as a shut off valve mounted by the evaporator and ships with two turns open.

Liquid refrigerant is used to cool the oil supply to both the Thrust bearing and the Journal bearing on larger units (360 ton and larger). On refrigerant pump units the oil cooler is located inside the economizer and uses refrigerant passing from the condenser to evaporator to cool the oil. The oil leaves the oil cooler and flows to both the thrust and journal bearings.

Motor Cooling System

Compressor motors are cooled with liquid refrigerant, See Figure 3.

The refrigerant pump is located on the front of the oil tank motor (inside the oil tank). The refrigerant pump inlet is connected to the well at the bottom of the condenser. The connection is on the side where a weir assures a preferential supply of liquid. Refrigerant is delivered to the motor via the pump and delivered to the same connection as used on units without the refrigerant pump. Motor refrigerant drain lines are routed to the condenser.

Mechanical Operation - CDHF

Figure 1
Illustrates the General Component
Layout of a Typical CDHF Chiller

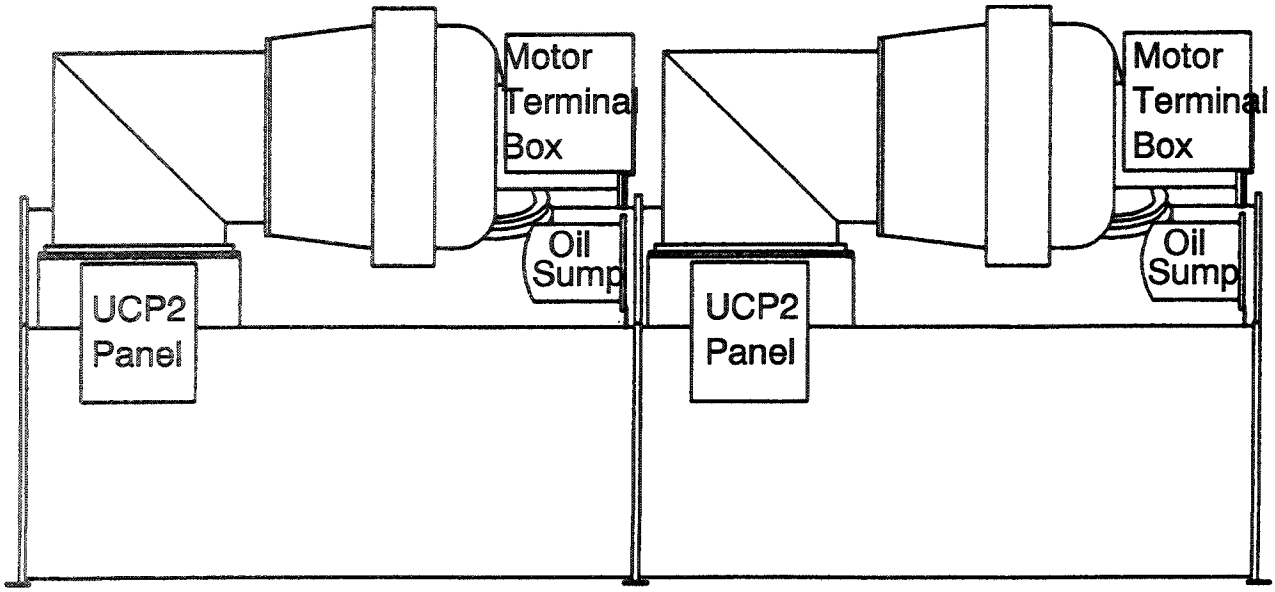

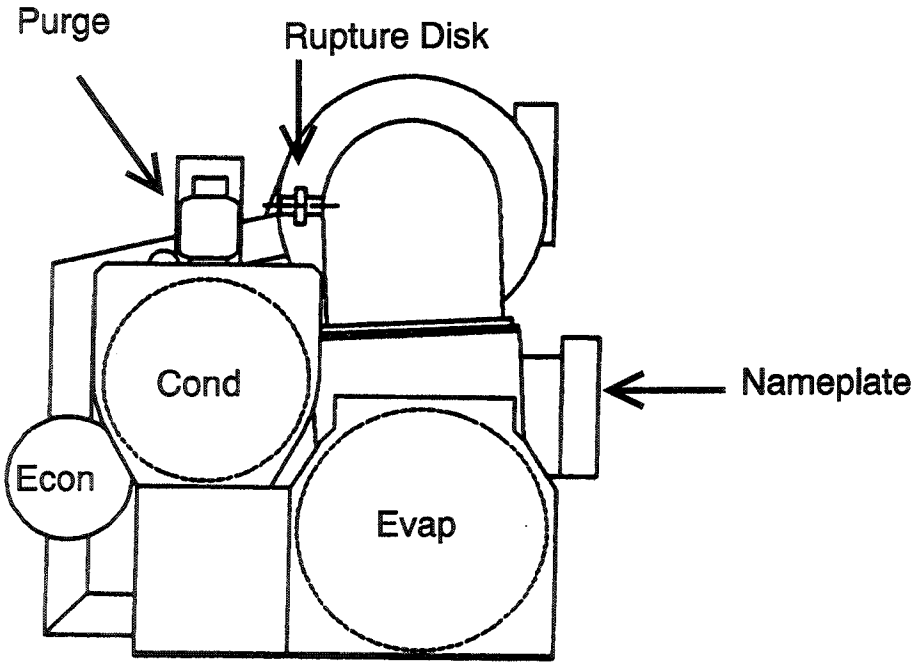

Figure 2
CDHF Pressure and Enthalpy Curve

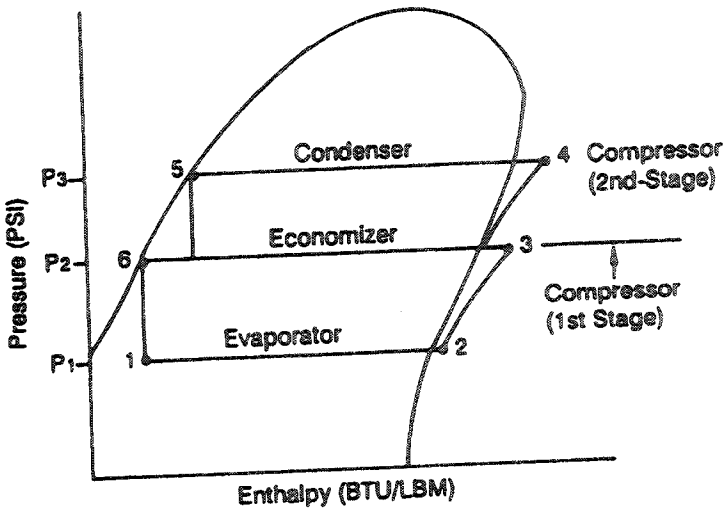

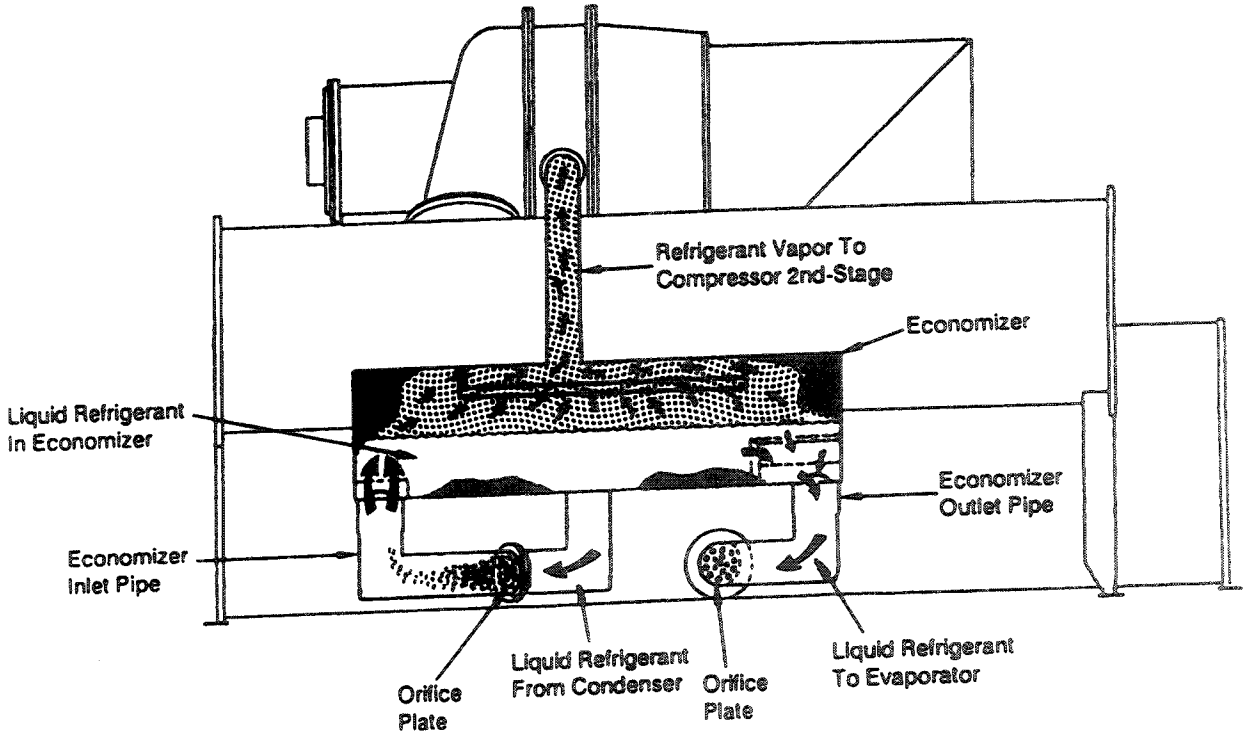

Figure 3
CDHF Compressor Lubrication System and Motor Cooling
(Please note only one of two compressors is shown for the Duplex)

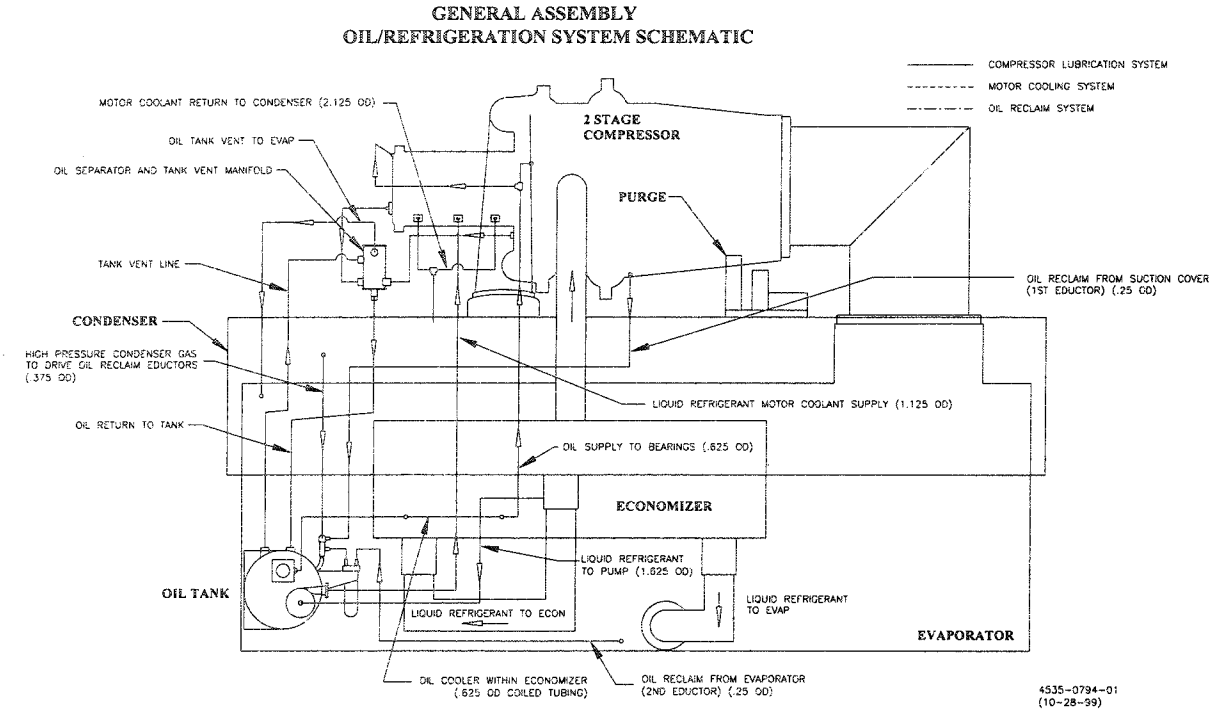

Unit Control Panel

Safety and operating controls are housed in the UCP2 unit control panel on the unit, the starter panel and the purge control panel (Control Panel layout is illustrated in Figure 4)

The UCP2 control consists of a modular design partitioned by major function or group of functions. All modules communicate with each other through the IPC circuit.

Figure 4
Control Panel Layout

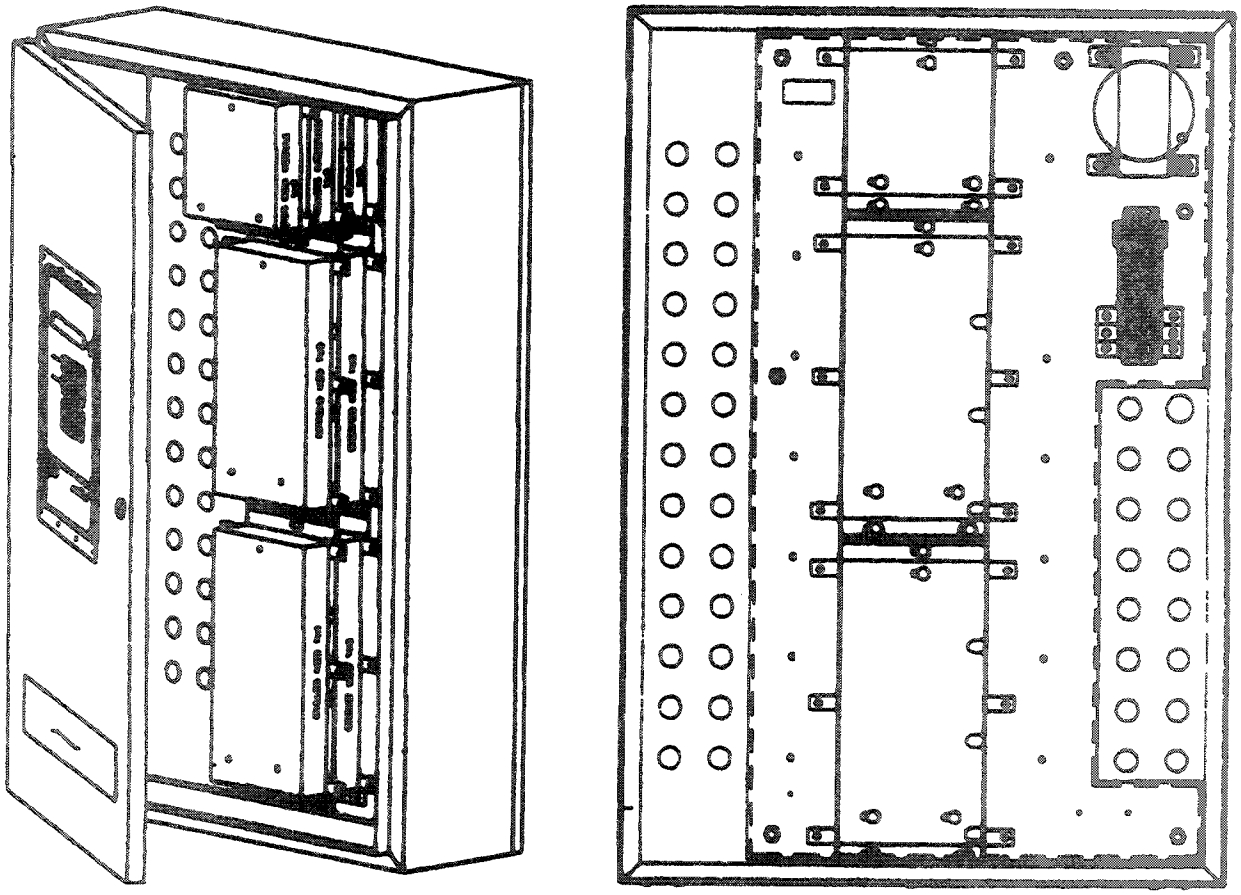

Electrical Sequence of Operation

Overview

This section will acquaint the operator with the control logic governing CDHF chillers equipped with UCP2 based control systems.

In the following discussion, reference is made to Chiller "A" and Chiller "B". Chiller "A" is ALWAYS the leaving chilled water side and Chiller "B" is the entering side for water.

Note: The typical wiring diagrams printed in the installation manual are representative of standard CDHF units and are provided only for general reference. They may not reflect the actual wiring of your unit. For specific electrical schematic and connection information, always refer to the wiring diagrams that shipped with the chiller.

With the supply power disconnect switch or circuit breaker (2CB1) closed, 120-volt control power is provided through control power transformer 2T5 and a 30-amp starter panel fuse (2F4) to terminal 1TB-1 in the UCP2 control panel. From this point, control voltage flows to:

Circuit Breaker 1CB1, supplying power to starter module (2U1) via terminal 2TB1-6 for starter contactors operation and the high condenser pressure switch 3S1.

Circuit Breaker 1CB2, supplying power to the purge module (3U1) and the 24 volt supply transformer 3T1 for the purge module (3U1).

Circuit Breaker 1CB3, supplying power to:

(a) Circuit Breaker 1CB3, 115- volt control power transformer 2T5 flows through branch circuit breaker 1CB3 and terminal 1TB1-6 to a 15 amp fuse (1F2) Fuse which protects the refrigerant and oil pump motor (4B3) from over amperage conditions. Current passing through fuse 1F2 reaches 3 normally open parallel sets of contacts: those of refrigerant and oil pump relay (1K5), 1U2-J22 relay and the start contactor 2K1-aux.

Note: While the 1U2-J22 relay automatically is closed by 1U2 as a part of the start sequence. It can also be closed manually by changing the oil pump status to "ON" in the service test mode.

Closure of the 1U2-J22 relay or 2K1 auxiliary contacts allows current to pass through the coil of the refrigerant pump starter relay (1K5), closing the contact of 1K5 to energize the Run winding of the refrigerant pump. When motor 4B3 first starts, current draw is high: this causes current sensing relay 4K8 to close its normally open contacts and pull in Capacitor 4C1 and the pump Start winding. Increasing motor speed and related decreasing current through the main winding and 4K8 relay coil reduces the magnetic force and the 4K8 armature drops out to open the 4K8 contacts and disconnect the Start winding and 4C1 Capacitor. Current now flows to the Run windings of the oil pump motor or refrigerant and oil pump motor.

(b) The Chiller Module (1U1) to operate the evaporator (4L2) and condenser (4L3) water pressure transducer solenoids and to the chilled water (5S1) and condenser water (5S2) flow switch circuits.

The Starter Module (2U1) receives 24 volt power from control power transformer 2T4 in the starter panel.

The Clear Language Display (1U4) Stepper (1U3), Circuit (1U2), Options (1U5), Chiller (1U1), and COMM (1U6), (1U7), (1U8) & (U10) modules obtain 24 volt power from control power transformer 1T1 in the control panel.

Chilled and Condenser Water Flow Interlock Circuits

Proof of chilled water flow for the evaporator is made by the closure of flow switch 5S1 and the closure of auxiliary contacts 5K1 on terminals 1TB1-10 and 1TB1-12.

Proof of condenser water flow for the condenser is made by the closure of flow switch 5S2 and the closure of auxiliary contacts 5K2 on terminals 1TB1-11 and 1TB1-13.

UCP2 and "Wye-Delta" Starter Control Circuits

Logic circuits within the various modules will determine the starting, running, and stopping operation of the chiller. If operation of the chiller is required and the chiller mode is set at "Auto", then the Chiller Module's logic decides to start the chiller based on the differential to start setpoint.

The Chilled Water Pump Relay (5K1) is energized by the Chiller Module (1U1-J12) and chilled water flow must be verified within 3 minutes by the Chiller Module (1U1-J26).

Based on the Restart Inhibit Timer and the differential to start setpoint, oil and refrigerant pump (4B3) will be energized by the Circuit Module (1U2-J22) and the condenser water pump relay (5K2) will be energized by the Chiller Module (1U2-J14) when the restart inhibit timer is at 30 seconds or less. The oil pressure must be at least 9 psid for 60 continuous seconds and condenser water flow verified within 3 minutes by the Chiller Module (1U1-J28) for the compressor start sequence to be initiated.

When less than 5 seconds remains before compressor start, a starter test is conducted to verify contactor states prior to starting the compressor. The test and start sequence shown below is conducted for "Wye-Delta" starters.

(a) Test for transition complete contact open (2K2 AUX at 2U1-J4) - 120 to 180 msec. An MMR diagnostic will be generated if the contact is closed.

(b) Delay time - 20 msec.

(c) If "Level 2 Contactor Integrity Test" is enabled, close start contactor (2K1) and check for no Current - 1 sec. If currents are detected, the MMR diagnostic "Starter Fault Type 1" is generated.

(d) Delay time - 200 msec.

(e) Close shorting contactor, (2K3) and check for no current - 1 sec. If currents are detected the MMR diagnostic "Starter Fault Type II" is generated.

(f) If no diagnostics are generated in the above tests, the Start Relay (2U1-J6) is closed for 2 seconds and the Stop relay (2U1-J8) is closed to energize the start contactor (2K1) in "A" chiller. The shorting contactor (2K3) has already been energized from (e) above. The compressor motor (4B1) starts in the "Wye" configuration, an auxiliary contact (2K1-AUX) locks in the start contactor (2K1) coil, and the acceleration timer begins to time out.

(g) After the compressor motor has accelerated and the maximum phase current has dropped below 85% of the chiller nameplate RLA for 1.5 seconds, the starter transition to the "Delta" configuration is initiated.

(h) The transition contactor (2K4) is closed through relay 2U1-J14, placing the transition resistors (2R1, 2R2 and 2R3) in parallel with the compressor motor windings.

(i) The shorting contactor (2K3) is opened through the opening of relay 2U1-J12 100 msec after the closure of the transition relay 2U1-J14.

(j) The run contactor (2K2) is closed through relay 2U1-J10 shorting out the transition resistors 260 msec after the opening of the shorting relay 2U1-J12. This places the compressor motor in the "Delta" configuration and the micro waits to look for this transition for 2.32 - 2.38 seconds through the closure of the transition complete contacts (2K2-AUX) at 2U1-J4.

(k) 140 msec after (2K2) is energized, the transition relay (2U1-J14) is opened de-energizing the transition contactor (2K4).

(l) The micro must now confirm closure of the transition complete contact (2K2-AUX) within 2.5 seconds after the run relay (2U1-J10) is closed. When this is verified the compressor motor starting sequence is complete. An MMR diagnostic will be generated if the transition complete contacts (2K2-AUX) do not close.

Now that the compressor motor in Chiller "A" (4B1) is running in the "Delta" configuration, the inlet guide vanes will modulate, based on Loading or Unloading sequence described below.

Duplex Chiller Loading Sequence

The duplex chiller control will be accomplished by the Duplex Control Module (DCM) that resides in downstream unit Chiller "A". Its main tasks are setpoint control (chilled water and current limit) and compressor staging. All other setpoints are controlled at each individual compressor UCP2 clear language display panel. Each unit can be reset or stopped separately through each clear language display. Options not available for duplex units are: tracer base loading, hot gas bypass, hot water control, free cooling and ice making.

To the Tracer or generic BAS, the duplex chiller acts as one chiller, by accepting only one set of control setpoints.

Chiller Loading Sequence:
Chiller "A" (the downstream chiller) starts first and loads to 100%. There is a dead band such that once Chiller "A" is above 80% for more than (5) minutes, Chiller "B" starts. While Chiller "B" loads up to 50% Chiller "A" unloads to 50%. At this point both compressors load as required jointly to 100%.

The duplex control module senses leaving chilled water of the downstream chiller (Chiller "A") and loads both simultaneously. The entering water temperature is sensed at the entering side of the upstream chiller (Chiller "B").

As the load decreases, the duplex chiller module UNLOADS both Chiller "A" and "B". Chiller "B" will drop off the line at a point below 35%. Chiller "A" takes up the load carried by Chiller "B" and then unloads based on system requirements.

Duplex Control Module (DCM) Setpoint Control management falls into (3) categories: Front Panel Equalization, Active Setpoint Transfer and Auto/Stop Management.

Front Panel Equalization:
Applies to only chilled water setpoint and current limit setpoint. When the DCM detects a change in one of these front panel setpoints on one of the panels it transfers the new value to the same setpoint on the other panel. This allows the user to modify any application front panel setpoint on either panel and have the change automatically sent to the other panel.

Active Setpoint Transfer:
Is nothing more than always sending the active current limit setpoint of panel "A" to panel "B" through the duplex control module. The duplex control module current limit setpoint should take precedence over all other current limit setpoints. If the DCM loses communications with panel "A", it will set the DCM current limit setpoint to panel "B" to invalid, causing panel "B" to choose its current limit setpoint from some other source: Front Panel, Tracer or external input.

Auto/Stop Management:
Allows Tracer or generic BAS system to stop the duplex as one machine. The chiller module puts information on the IPC that allows the DCM to know when to listen to Tracer Auto/Stop and other Tracer commands.

If the chilled water temperature drops below the chilled water setpoint by an amount set as the "differential to stop" setpoint, a normal chiller stop sequence is initiated as follows:

a. The inlet guide vanes are driven closed for 50 seconds.

b. After the 50 seconds has elapsed, the stop relay (2U1-J6) and the condenser water pump relays (1U1-J14) open to turn off the compressor motor (4B1) and the condenser water pump. The oil pump motor (4B3) will continue to run for 3 minutes post lube while the compressor coasts to a stop.

The chilled water pump will continue to run while the chiller module (1U1) monitors leaving chilled water temperature preparing for the next compressor motor start based on the "differential to start" setpoint.

If the STOP key is pressed on the Clear Language Display (CLD), the chiller will follow the same stop sequence as above except the chilled water pump relay (1U1-J12) will also open and stop the chilled water pump after the chilled water pump delay timer has timed out after compressor shut down.

If the STOP key is pressed twice in rapid succession (twice within 5 seconds), a "panic stop" is initiated which follows the same stop sequence as pressing the STOP key once except the inlet guide vanes are not sequence closed and the compressor motor is immediately turned off.

Duplex Unit UCP2 Displays and Diagnostic Description

The following is a list of new duplex unit displays that you will find in the UCP2 controls and a list of associated diagnostics.

Chiller Report Screen:

1. Chiller Operating Mode: DCM stop will be seen as a standard mode.

2. Active Chilled Water Setpoint/Chilled Water Setpoint source: Duplex control has been added as a setting source.

3. Active Current Limit Setpoint/Current Limit Setpoint source: Duplex control has been added as a setting source.

4. Chilled Water Setpoint source: Duplex control has been added as a setting source.

5. Current Limit Setpoint source: Duplex control has been added as a setting source.

Operator Settings:

6. Chilled Water Reset Type: This screen is suppressed when the chiller is under Duplex Control and is Compressor B.

Service Settings

7. Duplex Control Module (DCM) option: This has been added directly following the printer option screen. The options are installed or not installed. The DCM option will automatically be installed if communication with a DCM module occurs.

Diagnostic Descriptions

New diagnostic descriptions on the UCP2 that relate to the Duplex are shown in Table 1.

Table 1
Diagnostics that relate to the Duplex Unit

Diagnostic Description	Appl Unit Type	Diag Type	Cause	Can Be Remotely Reset	Help Message
DCM:Loss of communication with Chiller A	CTV	IFW	The DCM module lost communcations with the Chiller A Chiller Module for 15 contiguous seconds	Yes	Check IPC Wiring Connections
DCM: Loss of communication with Chiller B	CTV	IFW	The DCM module lost communcations with the Chiller B Chiller Module for 15 contiguous seconds	Yes	Check IPC Wiring Connections
DCM: Loss of communication with Starter A	CTV	IFW	The DCM module lost communcations with the Chiller A Starter Module for 15 contiguous seconds	Yes	Check IPC Wiring Connection
DCM: Loss of communication with Starter B	CTV	IFW	The DCM module lost communcations with the Chiller B Starter Module for 15 contiguous seconds	Yes	Check IPC Wiring Connection
DCM: Loss of communication with TCI A	CTV	IFW	The DCM module lost communcations with the Chiller A TCI Module for 15 contiguous seconds	Yes	Check IPC Wiring Connection

Vane Actuator Control

The 1U3 Stepper Module pulses a DC voltage to the windings of the 4B2 Stepper Module Vane Actuator to control inlet guide vane position.

While operation of this stepper motor is automatic, manual control is made possible by going to the Vane Control Status and Vane Position Commands screen in the Service Tests Menu and changing the "Target" value.

Note: If the chiller is operating in a limit mode (i.e. current limit, condenser limit, evaporator limit, etc.) the limit operation has priority over all manual modes of operation.

On each UCP power-up, the inlet guide vanes are driven fully closed to recalibrate the zero position (Steps) of the Stepper motor vane actuator. An inlet guide vane stroke test is conducted for BPI (Binary Position Indicator) position on all resets (hardware and software) if there has not been a Momentary Power Loss. This is also done if there is a call for a cooling or heating condition and it has been 24 hours or more since the last BPI test and there has not been a Momentary Power Loss for 5 minutes.

Note: The closed range of the BPI must straddle the factory programmed 90 degree Vane Position.

Unit Start-Up Procedures

Daily Unit Start-Up

1. Verify that both the chilled water pump and condenser water pump starter are in either "ON" or "AUTO" position.

2. Verify the cooling tower is in either "ON" or "AUTO" position.

3. Check the oil tank oil level; the level must be visible in or above the lower sight glass. Oil level may be easily gaged by the aluminum float balls in the sight glasses. Be sure to check the oil tank temperature; normal oil tank temperature before start-up is 140° F to 145°F (60° to 63° C).

Note: The oil heater is energized only when the unit if OFF.

4. Check the chilled water setpoint and readjust it, if necessary, in the Operator Settings menu.

5. If necessary, readjust the current limit setpoint in the Operators Setting Group.

6. Press "AUTO".

The UCP also checks compressor motor winding temperature, and a minimum 30 second delay is initiated if the winding temperature is less than 165° F. If it is greater than 165° F, however, a 15-minute delay period begins. The chilled water pump relay is energized and evaporator water flow is proven. Next, the UCP checks the leaving evaporator water temperature and compares it to the chilled water setpoint. If the difference between these values is less than the start differential setpoint, cooling is not needed.

If the UCP determines that the difference between the evaporator leaving water temperature and chilled water setpoint exceeds the start differential setpoint, the unit enters the Initiate Start Mode and the oil pump and the condenser water pump are started.

If condenser water flow is not proven (i.e., flow switch 5S3 does not close) within 4.25 minutes, the unit is locked out on a MAR diagnostic.

Oil pressure must be verified within Unit Start-Up Procedures.

When less than 5 seconds remain on the restart inhibit, the pre-start starter test is conducted on Y-Delta starters. If faults are detected, the Unit's compressor will not start, and a MMR Diagnostic will be generated.

After the pre-start Starter test, the UCP sends a start signal to the compressor motor. Within 2 seconds, 3 phases of current in the correct phase sequence must be detected. If there is no current, 1 or 2 phases missing, or reverse electrical sequence, diagnostics will occur.

Acceleration and proof of transition must occur within 2.5 seconds of transition initiation, or unit start-up is aborted. (If this occurs, the unit goes into the post-lube mode, and a MMR diagnostic is generated).

If the compressor motor starts and accelerates successfully, "Unit is Running" appears on the display. At this time the purge unit will start operating on "Automatic" and will continue to operate as long as chiller compressor is running.

Note: Whenever the UCP detects a MMR diagnostic condition during start-up, unit operation is locked out and manual reset is required before the start-up sequence can begin again. If the fault condition has not cleared, the UCP will not permit restart.

When the cooling requirement is satisfied, as determined by the differential to stop value, the UCP originates a "Shutdown" signal. The inlet guide vanes are driven closed for 50 seconds, and the unit enters a 3-minute post-lube period. The compressor motor and condenser water pump starter are de-energized immediately, but the oil pump continues to run during this 3-minute interval; the evaporator pump will continue to run for the time specified in the evap pumpoff delay. Once the post-lube cycle is complete, the unit returns to the auto mode.

Seasonal Unit Start-Up

Note: Refer to CVHE-W-8A or the most recent wiring manual for UCP Start-Run-Shutdown sequence and UCP timing functions.

1. Close all drain valves, and re-install the drain plugs in the evaporator and condenser headers.

3. Vent and fill the cooling tower, if used, as well as the condenser and piping. At this point, all air must be removed from the system (including each pass). Then closed the vent valves in the condenser water boxes.

4. Open all of the valves in the evaporator chilled water circuit.

5. If the evaporator was previously drained, vent and fill the evaporator and chilled water circuit. When all air is removed from the system (including each pass), close the vent valves in the evaporator water boxes.

6. Lubricate the external vane control linkage and the lubrication system spindle valve.

7. Check the adjustment and operation of each safety and operating control.

8. Equalize refrigerant charge between the two circuits.

9. Close all disconnect switches.

⚠ **WARNING**
ENSURE THE EQUIPMENT IS PROPERLY GROUNDED WHEN MEASUREMENTS, ADJUSTMENTS, OR OTHER SERVICE RELATED OPERATIONS ARE PERFORMED WITH POWER ON. Failure to do so could result in injury or death due to electrical shock or contact with moving parts.

10. Perform instructions listed in "Daily Unit Start-Up" section.

Unit Shutdown Procedures

Daily Unit Shutdown

1. Press STOP.

2. After compressor shutdown turn off the chilled water pump at the pump's push-button station. (Or stop chilled water flow by the means devised for this particular application.)

3. Open all disconnect switches except the control power disconnect switch.

Seasonal Unit Shutdown

1. Press STOP.

2. After compressor shutdown turn off the chilled water pump at the pump's push-button station. (Or stop chilled water flow by the means devised for this particular application.)

3. Open all disconnect switches except the control power disconnect switch.

⚠ WARNING
USE CARE AND ENSURE THE EQUIPMENT IS PROPERLY GROUNDED WHEN SERVICING SYSTEM WITH POWER ON. Failure to do so, could cause injury or death due to electrical shock or contact with moving parts.

⚠ CAUTION
CONTROL POWER DISCONNECT MUST REMAIN CLOSED DURING ENTIRE SHUTDOWN PERIOD, this will allow oil sump heater operation and prevent refrigeration from condensing in oil sump.

4. Drain the condenser piping and cooling tower, if used.

5. Remove the drain and vent plugs from the condenser headers to drain the condenser.

6. Once the unit is secured for shutdown, the maintenance procedures described under "Annual Maintenance" in the Periodic Maintenance section of this manual should be performed by qualified Trane service technicians.

Note: During extended shutdown, be sure to operate the purge unit for a two-hour period every two weeks. If the purge is not in the Adaptive mode. This will prevent the accumulation of air and non-condensable in the machine. to start the purge, change the purge mode to "ON" in the Operator Settings Menu. Remember to turn the page mode to AUTO after the two-hour run time.

⚠ CAUTION
DO NOT ALLOW THE CHILLER TEMPERATURE TO RISE ABOVE 110° F (43°c). CONTINUOUS RUNNING OF PUMPS WHILE THE MACHINE IS OFF MAY CAUSE THIS CONDITION TO OCCUR. Failure to watch the temperature will cause the rupture disk to relieve and discharge the refrigerant from the machine.

Trouble Analysis

If the red light on the control panel is flashing, an MMR diagnostic has occurred. For more diagnostic information, refer to the Diagnostic Section of the clear language display manual, CVHE-CLD-1A or latest revision. The diagnostic must be analyzed, corrections made by qualified personnel and the MMR diagnostic reset before the chiller can be returned to operation.

Periodic Maintenance

Overview

This section describes the basic chiller preventive maintenance procedures, and recommends the intervals at which these procedures should be performed. Use of a periodic maintenance program is important to ensure the best possible performance and efficiency from a chiller.

Recommended purge maintenance procedures for the Purifier Purge unit are covered in the latest Purge Operation and Maintenance manual.

An important aspect of the chiller maintenance program is the regular completion of records. Provided at the end of this manual are samples of the *"Annual Inspection Check List and Report"*, *"CenTraVac with UCP2 Commissioning Checklist & Start-Up Test Log"*, *"Start-Up Test Log for Water Cooled CenTraVacs with UCP2 Control Panels"* and *"UCP2 "Settings Group" Menu Record"*.

Table 2
Normal Chiller Operating Characteristics

Important: Always refer to the local Trane office for the latest revisions as there may be pertinent changes made since the printing of this manual.

When the logs are filled out accurately by the machine operator, the completed logs can be reviewed to identify any developing trends in the chiller's operating conditions. For example, if the machine operator notices a gradual increase in condensing pressure during a month's time, he can systematically check, then correct the possible cause(s) of this condition (e.g., fouled condenser tubes, non-condensable in the system, etc.)

Daily Maintenance and Checks

[ ] Check the chiller's evaporator and condenser pressures, oil tank pressure, differential oil pressure. Compare the readings with your previous records.

Below is Table 2 which shows normal chiller operating characteristics.

CAUTION
IF FREQUENT PURGING IS REQUIRED. MONITOR PURGE PUMPOUT RATE, IDENTIFY AND CORRECT SOURCE OF AIR OR WATER LEAK AS SOON AS POSSIBLE. Moisture contamination caused by leakage can shorten chiller life expectancy.

[ ] Check the oil level in the chiller oil sump using the 2 sight glasses provided in the oil sump head. When the unit is operating, the oil level should be visible in the lower sight glass. Oil level may be easily gaged by the aluminum float balls in the sight glasses.

Weekly Maintenance

[ ] Complete all daily maintenance procedures and checks.
Every 3 Months

WARNING
LOCK UNIT DISCONNECT SWITCH IN OPEN POSITION, failure to do so could cause injury or death due to electrical shock or contact with moving parts.

Operating Characteristics	Normal Reading
Evaporator Pressure	12" to 18" Hg (Vacuum)
Condenser Pressure (See Notes 1 and 2)	2 to 12 psig (Standard Condensers)
Oil Sump Temperature: Unit not Running	140° to 145° F (60° to 63°C)
Unit Running	115° to 150° F (45° to 66°C)
Differential Oil Pressure (Note 3)	18 to 22 psid

Notes:
1. Condenser pressure is dependent on condenser water temperature, and should equal the saturation pressure of HCFC-123 at a temperature 5-10°F (3 to 6°C) above that of leaving condenser water at full load.
2. Normal pressure readings for ASME condensers exceed 12 psig.
3. Oil Tank Pressure 12" to 18" Hg
   Discharge Oil Pressure 7 to 15 psig

Every 3 Months

⚠ WARNING
LOCK UNIT DISCONNECT SWITCH IN OPEN POSITION, failure to do so could cause injury or death due to electrical shock or contact with moving parts.

[ ] Complete all recommended weekly maintenance procedures. (Refer to the previous sections for details.)

[ ] Clean all water strainers in the CenTraVac water piping system.

Every 6 Months

⚠ WARNING
LOCK UNIT DISCONNECT SWITCH IN OPEN POSITION, failure to do so could cause injury or death due to electrical shock or contact with moving parts.

[ ] Complete all recommended quarterly maintenance procedures.

[ ] Lubricate the vane control linkage bearings, ball joints, pivot points and oil filter change valve; a few drops of OIL-22 is sufficient.

[ ] Drain the contents of the rupture disk and purge discharge vent-line drip-leg, into an evacuated waste container minimally, more often if the purge is operated excessively.

Also, apply one or two drops of oil on the vane operator shaft and spread it into a very light film; this will protect the shaft from moisture and rust.

Off-Season Maintenance

During those periods of time when the chiller is not operated, be sure the control panel is energized.

Annual Maintenance

Shut down the chiller once each year to check the items listed below; a more detailed inspection check list is provided on the "Model CDHF CenTraVac Annual Inspection Check list and Report" illustrated in this manual.

[ ] Perform the annual maintenance referred to in the Maintenance Section of the Purge manual.

[ ] Use an ice water bath to verify that the accuracy of the evaporator refrigerant temperature sensor (4RT5) is still within tolerance (i.e., ± 2.0° F at 32° F).

If the evaporator refrigerant temperature displayed on the UCP's read-out is outside this 4-degree tolerance range, replace the sensor.

Note: if the sensor is exposed to temperature extremes outside its normal operating range (0° F to 90° F) (-18° C to 32° C), check its accuracy at 6 month intervals.

Compressor Oil Change

Recommendations are to subscribe to an oil analysis program to determine the necessity to change oil, rather than change it automatically every year. This will reduce the chillers overall lifetime oil consumption and minimize refrigerant emissions. A drain fitting is installed in the oil filter housing for obtaining oil samples.

After the first six months of operation it is recommended to have the oil analyzed.

After one year of operation it is recommended to change the oil and filter and have the removed waste oil analyzed.

Beyond the first year, recommendations are to subscribe to an annual oil analysis program rather than change the oil automatically every year. This program will reduce the chiller's overall lifetime oil consumption and minimize refrigerant emissions. The oil analysis should be done by a qualified laboratory experienced in refrigerant/oil chemistry and the servicing of Trane Centrifugal chillers.

Oil Change Procedure

When oil analysis indicates the need to change compressor oil, use the following procedure for removing oil.

Note: Use only Trane Oil 0022. A full oil change is nine gallons of Oil 0022.

⚠ CAUTION
OPEN CONTROL PANEL DISCONNECT SWITCH BEFORE DRAINING THE SUMP. This will help prevent possible burnout of the oil sump heater.

[ ] Draw the oil from the chiller through the oil charging valve on the chiller oil sump into an approved, evacuated tank; or,

[ ] Pump the oil from the chiller through the oil charging valve into an air-tight resealable container, using a magnetically-driven auxiliary pump.

[ ] Forcing the oil from the oil pump by pressurizing the chiller (i.e. by raising chiller temperature or adding nitrogen) is NOT recommended.

Refrigerant dissolved in the oil can be removed and returned to the chiller by using an appropriate deep-vacuum recovery unit and heating/agitating the oil container. Follow all federal, state and local regulations with regard to disposal of waste oil.

Replacing Oil Filter

Replace oil filter. (1) Annually, (2) at each oil change, (3) or if erratic oil pressure is experienced during chiller operation.

Oil Filter Replacement Procedure

Use the following procedure to service the oil filter. Refer to Figure 5.

1. Run the oil pump for two to three minutes to insure that the oil filter is warmed up to the oil sump temperature.

2. Turn the oil pump motor off.

3. Pull the "D" handle on the rotary valve locking pin out of its detent and rotate the valve to the "DRAIN" position. An offset pointer is located on the top of the valve with wrench flats to allow turning. The spring force on the locking pin should allow the pin to drop into a detent at this position.

4. Allow at least 15 minutes for the oil to drain from the filter back into the oil sump.

5. Pull the "D" handle to unlock the pin and rotate the valve to the "CHANGE FILTER" position. This isolates the filter from the unit. The locking pin should drop into a detent in this position.

6. Remove and replace the filter as quickly as possible. Place the used filter in a resealable container. Follow all local, state and federal regulations to dispose of the filter.

Pull the "D" handle to unlock the pin and rotate the valve to the "RUN" position. The locking pin should drop into a detent in this position. The chiller is now ready for operation.

Other Maintenance Requirements

1. Inspect the condenser tubes for fouling; clean if necessary.

2. Measure the compressor motor winding resistance to ground; a qualified service technician should conduct this check to ensure that the findings are properly interpreted.

Contact a qualified service organization to leak-test the chiller; this procedure is especially important if the system requires frequent purging.

3. Use a nondestructive tube test to inspect the condenser and evaporator tubes at 3-year intervals.

Note: It may be desirable to perform tube tests on these components at more frequent intervals, depending upon chiller application. This is especially true
of critical process equipment.

4. Depending on chiller duty, contact a qualified service organization to determine when to conduct a complete examination of the unit to discern the condition of the compressor and internal components.

Note:
(a) Chronic air leaks can cause acidic conditions in the compressor oil and result in premature bearing wear.

(b) Evaporator or condenser water tube leaks. Water mixed with the compressor oil can result in bearing pitting, corrosion, or excessive wear.

5. Submit a sample of the compressor oil to a Trane qualified laboratory for comprehensive analysis on an annual basis; this analysis determines system.

6. Submit a sample of the compressor oil to a Trane qualified laboratory for comprehensive analysis on an annual basis; this analysis determines system moisture content, acid level and wear content of the oil, and can be used as a diagnostic tool.

Lubrication

The only CDHF chiller components that require periodic lubrication are the external vane linkage assembly, oil filter change valve. 1st stage inlet guide vane tang assembly o ring and oil valve block o ring.

The Oil Valve Block Rotary Valve uses dual o rings to seal to atmosphere. These should be manually lubricated by removing the pipe plug at the valve lubrication port and placing a few drops of Trane OIL-0022 in the cavity. Be sure to reinstall the pipe plug when lubrication is completed.

Refrigerant Charge

⚠ WARNING
FOLLOW ALL SAFETY PROCEDURES DESCRIBED IN THE MSD SHEET FOR REFRIGERANT WHEN PROCEDURES OR SERVICE MIGHT EXPOSE PERSONNEL TO LIQUID OR VAPOROUS REFRIGERANT OR REFRIGERANT CONTAINERS. Failure to do so could result in injury or death.

The refrigerant charging procedure for Trane centrifugal chillers is:

1. If water is present in the tubes , break machine vacuum with refrigerant vapor, or circulate water to avoid tube damage.

Figure 5
Rotary Valve in Drain Position

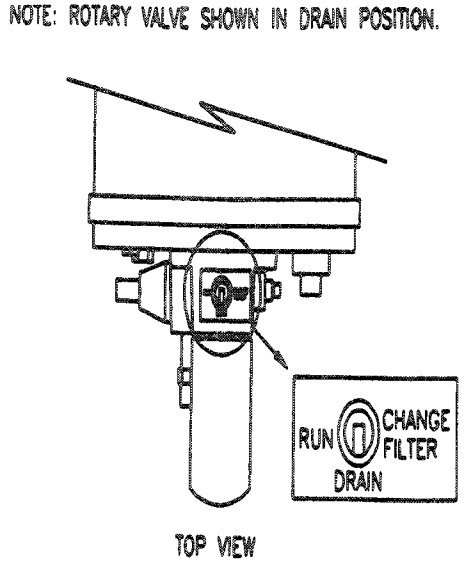

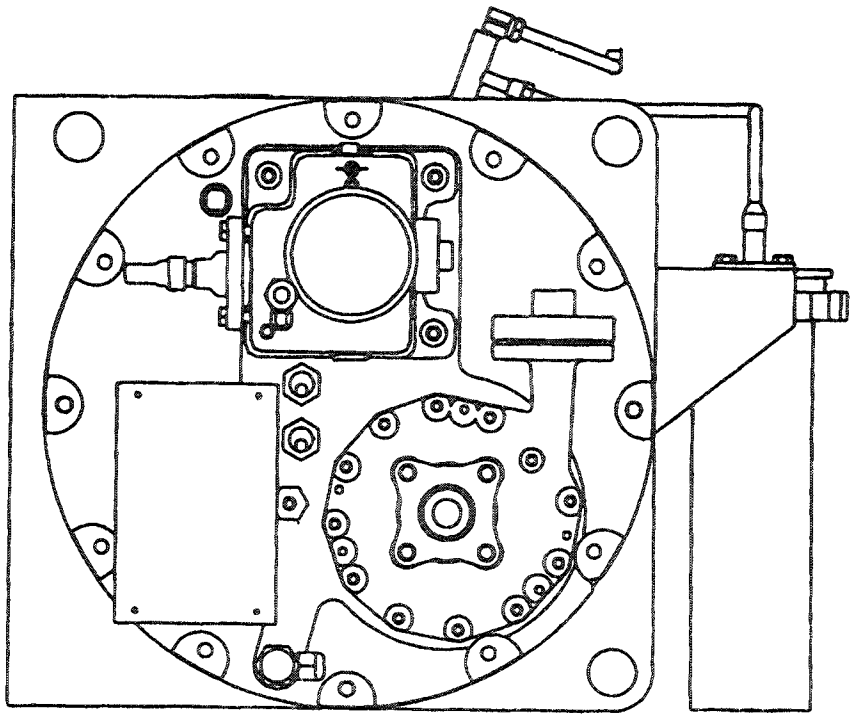

Front View with Refrigerant Pump

2. Always use refrigerant compatible hoses or copper-tubing with self-sealing connections or shut-off valves.

3. Transfer the refrigerant using one of the following (listed in order of preference):

(a) An EPA approved low-pressure refrigerant recovery/ recycle unit.

(b) The available pressure differential.

(c) Gravity. Use a return vent line to refrigerant containers to equalize pressure.

(d) A mechanical gear pump with compatible seals, or a magnetically-driven pump.

4. When charging from new drums, use fitting designed for use with 3/4 in center drum bung of 2-inch bung. Figure 6 shows drum bung fitting with Quick Connect Coupling.

5. Do not use dry nitrogen to push refrigerant into the chiller as was the common practice in the past. This will contaminate the charge and require excessive purging, which will result in unnecessary release of refrigerant.

6. Weigh in the proper charge.

7. Use recovery/recycle unit or vacuum pump to evacuate hoses; and fittings. Follow all Local, State and Federal regulations.

Figure 6
Drum Bung Fitting with Quick Connect Coupling

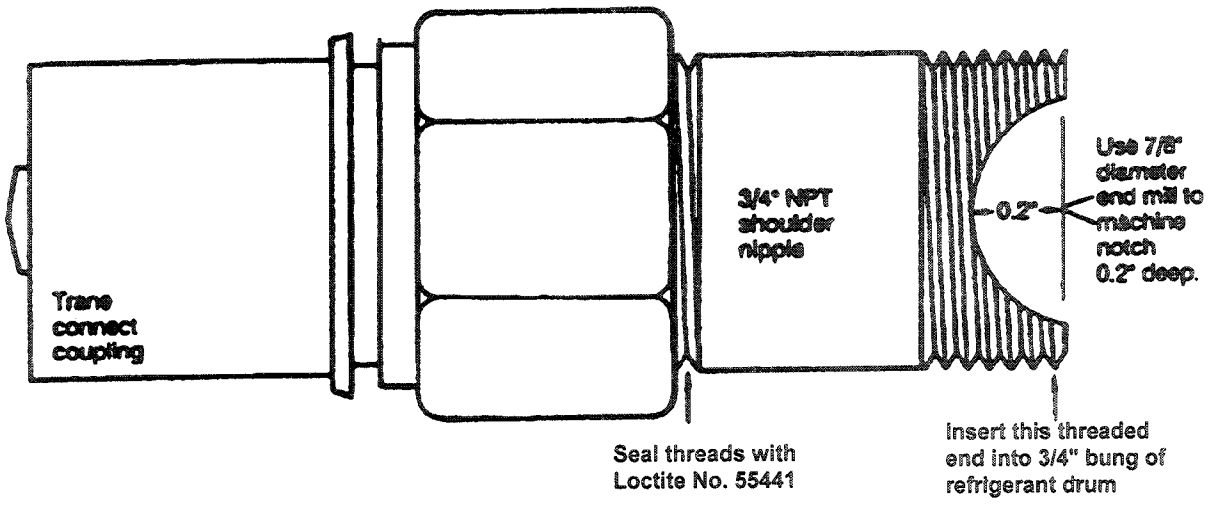

Recovery/Recycle Connections

To facilitate refrigerant removal and replacement, CDHF units are provided with a 3/4-inch vapor fitting with shutoff valve on the chiller suction and with a 3/4-inch liquid connection with shutoff valve at the bottom of the evaporator shell for each circuit.

Leak Testing

To leak-test a chiller containing full refrigerant charge, raise chiller pressure using a controlled hot water or electric-resistance system to a maximum of 8 psig. Do not use nitrogen, which will cause excessive refrigerant discharge by the purge system.

Cleaning the Condenser

⚠ **CAUTION**

DO NOT USE UNTREATED OR IMPROPERLY TREATED WATER, or equipment damage may occur.

Condenser tube fouling is indicated when "the approach" temperature (i.e., the difference between the saturated refrigerant temperature and the leaving condenser temperature) is higher than predicted.

If the annual condenser tube inspection indicates that the tubes are fouled, two cleaning methods (mechanical and chemical) can be used to rid the tubes of contaminants.

Use the mechanical cleaning method to remove sludge and loose material from tubes.

(To clean other types of fouling, including internally-enhanced types, consult a qualified service organization for recommendations.)

1. Remove the retaining nuts and bolts from the water box covers at each end of the condenser. Use a hoist to lift the covers off the water box (A threaded connection is provided on each water box cover to allow insertion of an eyebolt).

2. Work a round nylon or brass bristled brush (attached to a rod) in and out of each of the condenser water tubes to loosen the sludge.

3. Thoroughly flush the condenser water tubes with clean water.

Scale deposits are best removed by chemical means. Be sure to consult any qualified chemical house in the area (i.e., one familiar with the local water supply's chemical mineral content) for a recommended cleaning solution suitable for the job. (Remember, a standard condenser water circuit is composed solely of copper, cast iron, and steel).

A typical chemical cleaning setup is illustrated in Figure 7.

⚠ **CAUTION**

CONSULT A QUALIFIED CHEMICAL HOUSE IF USING CHEMICAL MEANS. MATERIALS USED IN THE EXTERNAL CIRCULATION SYSTEM, THE QUANTITY OF THE SOLUTION, THE DURATION OF THE CLEANING PERIOD, AND ANY REQUIRED SAFETY PRE-CAUTIONS SHOULD BE APPROVED BY THE COMPANY FURNISHING THE MATERIALS OR PERFORMING THE CLEAN-ING. Improper chemical cleaning can damage tube walls.

Remember, however, that whenever the chemical tube cleaning method is used, it must be followed up with mechanical tube cleaning, flushing and inspection.

Cleaning the Evaporator

Since the evaporator is typically part of a closed circuit, it does not accumulate appreciable amounts of scale or sludge. Normally, cleaning every 3 years is sufficient. However, on open CDHF systems, such as air washers, periodic inspection and cleaning is recommended.

Control Settings and Adjustments

A list of CDHF time delays and safety control cutout settings is provided in Table 3 called out in this manual.

For control calibration and check-out, contact a Trane qualified service organization.

Purge System

Because some sections of the chiller's refrigeration system operate at less-than-atmospheric pressure, the possibility exists that air and moisture may leak into the system. If allowed to accumulate, these non-condensables become trapped in the condenser and reduces the chiller's efficiency and cooling capacity.

The Trane Purifier Purge is the only purge system available for the CDHF chiller. The purge is designed to remove non-condensable gases and water from the refrigeration system. Purifier Purge unit operation, maintenance and trouble shooting is covered by a separate service literature manual and may be obtained through the nearest Trane office .

Figure 7
Chemical Cleaning Setup

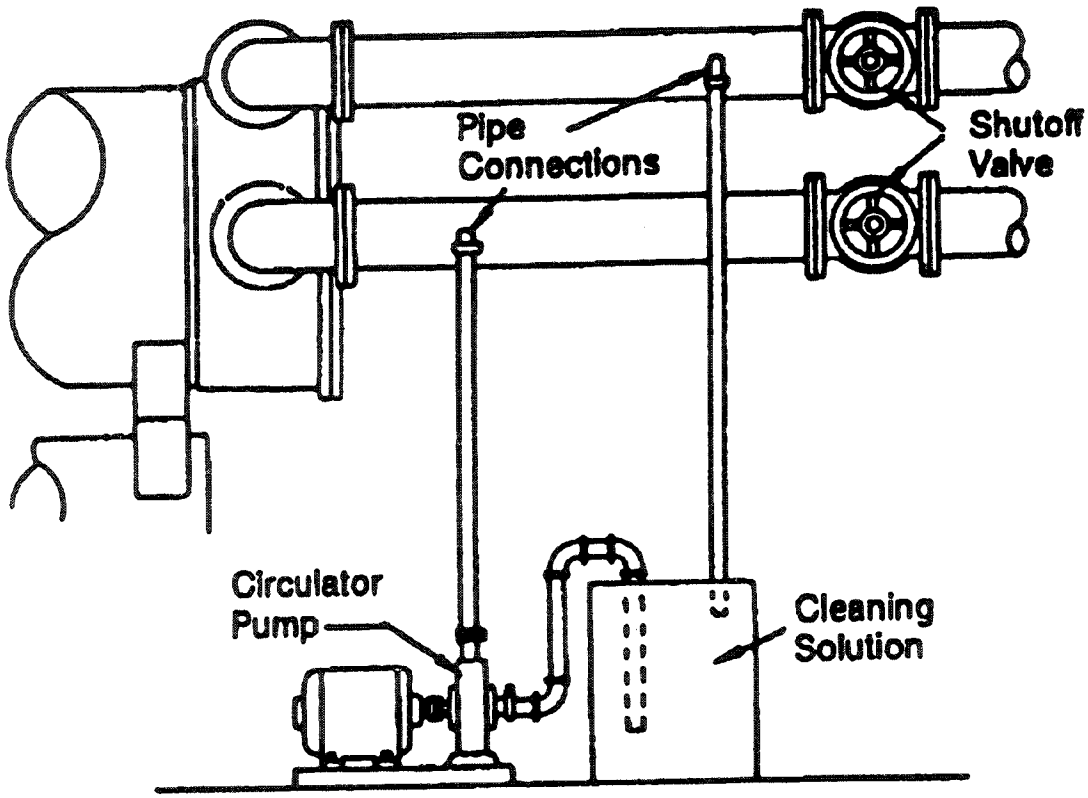

Time Delays and Safety Controls

Table 3: **Unit Time Delays and Safety Control Cutout Settings for UCP2**

Operating Controls: **Timers**	**Timing Interval**
Evap Pump Off Delay Time	Adjustable 0-30 minutes
IGV BPI Test	75 seconds
Over Drive IGV Closed	45 seconds
Post-Lube	3 minutes
Prelube	1 minute
Restart Inhibit Power up, or after MPL and winding temp <165F Power up, or after MPL and winding temp >165F Each additional start **Note: This restart inhibit function allows for 3 consecutive starts.**	30 seconds 15 minutes BT = BT + MHC RI = BT-50 BT= Background Timer MHC = Motor HeatingConstant (typically 25 minutes) RI = Restart Inhibit time in minutes

Safety Controls: **Fault Time Outs**	**Timing Interval**	**System Reset**
Chilled Water Flow Lost	6-10 seconds	MAR
Compressor Did Not Accelerate	Maximum Acceleration Timer: Y-Delta = 27 sec Auto X-former = 16 sec Primary Reactor = 16 sec Solid State Starter = 15 sec AFD = 12 sec Across the Line = 6 sec	MMR
Cond Water Flow Overdue	4.25 minutes	MAR
Condenser Water Flow Lost	6-10 seconds	MAR
Evap Water Flow Overdue	4.25 minutes	MAR
Extended Compressor Surge	15 + or - 1.5 minutes	MAR
Free Cooling Valve Closure Overdue	3 minutes	MAR
HGBP Valve Closure Overdue	3 minutes	IFW
IGV BPI Not Found During Search	The Inlet Guide Vane Actuator Binary Position Indicator was not found over the entire stroke of the IGV during the BPI search. (75 seconds)	IFW
Inlet Guide Vane Closure Overdue	3 minutes	IFW
Momentary Power Loss	2.5 line cycles (.0417 seconds)	MAR

Continued on next page

Table 3: Unit Time Delays and Safety Control Cutout Settings for UCP2 (Continued)

Safety Controls: Unit Cutouts	Timing Interval	System Reset	Trip Point
Differential Oil Pressure Overdue	3 minutes	MMR	12 psid
High Bearing Temp #1 and #2	2 seconds	MMR	180°F + or - 5° F
High Motor Temp Position #1, #2, #3	2 seconds	MMR	265° F + or - 15° F
High Oil Temp	120°F seconds	MMR	180°F
High Pressure Cutout	Instantaneous	MMR	15 + or - 1 psig
High Vacuum Lockout	Instantaneous	MMR	R11 = 3.8 psia R123 = 3.1 psia R134a = 12.8 psia R22 = 12.8 psia R12 = 24.8 psia
Low Chilled Water Temp	30° F seconds	MAR	Lvg Wtr Temp Cutout Setpoint
Low Diff Oil Pressure	8-12 psid = 36 psid-seconds <8 psid = Instantaneous	MMR	12 psid
Low Evap Rfgt Temp.	30° F seconds	MMR	Low Rfgt Temp Cutout Setpoint
Low Oil Temp (Start Inhibit Only)	Instantaneous	MAR	With Enhanced Oil Temp Protection Enabled = Saturated Evap. Temp. + 30° F (100 F Min) With Enhanced Oil Temp Protection Disabled = Low Oil Temp Cutout setting in UCP2

CENTRAVAC WITH UCP2 COMMISSIONING CHECKLIST & START-UP TEST LOG

Job Name_____ **Location**_____

Model #_____ **Serial #**_____

Sales Order #_____ **Start-up Date**_____

NOTE: The Unit Installation, Operation and Maintenance Manuals, Submittals, and Design Specifications must be used in conjunction with this checklist.

I. PRECOMMISSIONING PROCEDURES

☐ **A. Obtain Installation Check Sheet**

This must be prepared by the installer for the particular unit, verifying the unit is ready for commissioning.

☐ **B. Obtain Design (order) Specification Data**

This indicates the design criteria of the particular unit. A unit cannot be properly commissioned unless this data is known. It is the responsibility of the selling office to furnish this data.

☐ **C. Obtain Wiring Diagrams**

The "as-wired" electrical diagram should be compatable with the recommended Trane submittals and diagrams. Are customer added external/remote control circuits compatable? ☐ Yes ☐ No

☐ **D. General Installation Observations**

☐ 1. Is there any apparent shipping or rigging damage? ☐ Yes ☐ No

☐ 2. Record the pressure on the shipping gauge_____PSIG. If there is no pressure on the gauge, a leak test will have to be done before the unit can be evacuated and charged.

☐ 3. Is the water piping correctly installed? ☐ Yes ☐ No

Flow Switches ☐ Yes ☐ No Pressure Gauges ☐ Yes ☐ No

Isolation Valves ☐ Yes ☐ No Flow Balancing Valves ☐ Yes ☐ No

Thermometer Wells ☐ Yes ☐ No Vent Cocks and Drains ☐ Yes ☐ No

☐ 4. Have proper clearances around the unit been maintained per submittal and/or installation Manual guidelines? ☐ Yes ☐ No

☐ 5. Is power wiring of adequate ampacity and correct voltage? ☐ Yes ☐ No

Are fuses or circuit breakers of the correct value or type? ☐ Yes ☐ No

☐ 6. Is the unit base acceptable, level, and is the unit on isolators (rubber as supplied by Trane or spring type)? ☐ Yes ☐ No

☐ 7. Have the micro (less than 30 volts) circuits been properly isolated from the higher voltage control and power circuits? ☐ Yes ☐ No

☐ **E. Comments**_____

Note: This form is suggested for your use.

II. COMMISSIONING PROCEDURES

A. Pre-start operations

1. Holding Charge
   - ☐ _____PSIG. Must be positive pressure or leak test must be done.
   - ☐ Relieve the holding charge.

2. Calibration of High Pressure Cutout
   - ☐Calibrate the HPC to cut out when 15 PSIG is exceeded. The cut in value is approximatly 10 PSIG. CUT OUT_____PSIG, CUT IN_____PSIG.

3. Meggar the Motor (500 volt Meggar)
   - ☐Compressor motor Megohms- refer to temp/resistance chart for acceptable values. Remove surge suppressors before Megging. Never Meg test with the unit in a vacuum.

T1 to Earth____	T4 to Earth____	T1 to T2____	T1 to T4____
T2 to Earth____	T5 to Earth____	T1 to T3____	T2 to T5____
T3 to Earth____	T6 to Earth____	T2 to T3____	T3 to T6____

4. Evacuation
   - ☐Connect the vacuum pump to start evacuation. Use a 2-stage pump with at least 5 CFM capacity. Connect to the evaporator charging valve with a hose no smaller than 3/4 inch ID.

5. Condenser
   - ☐Isolation and flow balancing valves installed.
   - ☐ Calibrated thermometers and pressure gauges installed in/out of condenser on machine side of any valve or elbow.
   - ☐ If condenser pump controlled by UCP2, is field wiring correct and complete?
   - ☐ Condenser pump(s) run, system and strainers properly cleaned and/or flushed.
   - ☐ Condenser water strainer in close proximity to entering connection of condenser.
   - ☐ Provisions installed to properly maintain water treatment additives.
   - ☐ Initial water treatment added to system.
   - ☐ Flow or differential pressure switch installed and wired in series with auxiliary of pump motor starter. Operation of circuit verified.
   - ☐ Condenser water flow balanced. Ft H2O PD design_____, Ft H2O actual_____ GPM design_____ GPM actual_____

6. Evaporator

☐ _____PSIG. Must be positive pressure or leak test must be done.

☐ Calibrated thermometers and pressure gauges installed in/out of evaporator on machine side of any valve or elbow.

☐ If evaporator pump controlled by UCP2, is field wiring correct and complete?

☐ Evaporator pump(s) run 24 hrs. System and strainers properly cleaned and/or flushed.

☐ Evaporator water strainer in close proximity to entering connection of evaporator.

☐ Provisions installed to properly maintain water treatment additives.

☐ Initial water treatment added to system.

☐ Flow or differential pressure switch installed and wired in series with auxiliary of pump motor starter. Operation of circuit verified.

☐ Evaporator water flow balanced. Ft H2O PD design_____, Ft H2O PD actual_____
GPM design_____ GPM actual_____

7. Electrical and Controls

a. Motor starter panel

☐ All terminals tightened.

☐ Wiring free from abrasion, kinks, and sharp corners.

☐ Contactors and relays have freedom of movement.

☐ All contacts are free of corrosion or dirt. Panel is free of dust, debris etc.

☐ Check the ratio of the current transformers. Record the part #s on the start-up log.

☐ Use only twisted shielded pair for the IPC circuit between the starter and the UCP2 on remote starters. Recommended wire is Beldon 8760, 18 AWG. Polarity is critical.

☐ The low voltage IPC link (< 30 volts) must be in a separate conduit from the 115 volt wiring.

☐ IPC link routing within the starter panel must stay a minimum of 6 inches from higher voltages.

☐ Remote starter to UCP2 connections are complete and comply with Trane requirements.

☐ Check the correctness of the power connections from the starter to the motor.

☐ Check the wiring to the starter for size, voltage, and correct phase rotation (A-L1, B-L2, C-L3).

☐ Check for equal phase representation in each power wiring conduit.

b. Control panel

☐ All terminals tightened.

☐ Wires free from abrasion, kinks, sharp corners.

☐ Low voltage wires are isolated from high voltage wires.

☐ Panel is free of debris, dust, etc.

☐ "Power up" the control panel.

1. Starter disconnect locked open.
2. Fuse 2F4 must be removed from the starter.
3. Connect auxiliary 115VAC power cord to Terminals 1TB1-1 and 1TB1-2 in the control panel. **MAKE SURE OF THE POLARITY. THE 'HOT' SIDE MUST BE CONNECTED TO TERMINAL 1TB1-1 AND THE 'NEUTRAL' SIDE TO 1TB1-2.**
4. Plug in cord to 115VAC power source. Control panel is now energized.

☐ Record the settings found in the Operator Settings,Service Settings Field Start-up Group, and Machine Configuration Menus in the UCP2.

☐ Using the CVHE Operation and Maintenance manual and the order specification, double check and reset, if required, the settings of Current Overload Setting #1 and Current Overload Setting #2 found in the Machine Configuration menu of the UCP2.

NOTE: DO NOT FORGET TO ADJUST THE RLA RATING TO MATCH THE ACTUAL JOBSITE VOLTAGE IF IT DIFFERS FROM THE DESIGN VOLTAGE.

☐ If Evaporator and/or condenser water pumps are controlled by the UCP2, use the Service Test menu of the UCP2 to manually start and test the control of the pumps.

☐ Check the setting of the oil pressure regulating valve.

1. Use the Service Tests menu of the UCP2 to manually start the oil pump.
2. Proceed to the Compressor Report menu of the UCP2 and observe the Differential Oil Pressure.
3. Adjust the oil pressure regulating valve to maintain 12 to 18 psid. The oil pressure regulating valve may require adjustment as the unit is started.
4. This procedure also checks to ensure correct sensing of oil pressure. The Oil Pressure Cutout setting is a non-adjustable 9 psid within the logic of the UCP2.
5. Return Oil Pump control to 'auto'.

☐ Check vane operator and vanes.

1. Use the Service Tests menu of the UCP2 to manually overide the vane control.
2. Enter targets from 0% to 100% and observe vane operation. At minimum and maximum travel the operator should not exert any force on the vane assembly, adjust as required.
3. Vane movement is smooth to open/close.
4. Vane movement is reported back to the UCP2.
5. Return Vane control to 'auto'.

☐ Dry run the starter

1. Make sure the starter disconnect is safety locked open.
2. Use the Service Tests menu of the UCP2 to initiate the Starter Dry Run.
3. Observe correct operation of starter contactors.
4. Observe correct operation of transition complete signal (if required).
5. Disable Starter Dry Run when complete.

☐ Disconnect and remove the temporary power cord.

B. Preparation for Start-up.

1. Evacuation and charging

☐ Evacuation leak test. When vacuum has been drawn down to 1-2 MM Hg, secure the vacuum pump.Wait for 12 hours for a valid vacuum leak test. If the rise in vacuum is less than 2.5 per 12 hours, start-up may proceed.

☐ Charge refrigerant. **MAKE SURE THE CHILLED WATER IS FLOWING THROUGH THE EVAPORATOR.** Charge the prescribed amount of refrigerant through the liquid charging valve at the liquid inlet to the evaporator. Check that all drums contain a full amount of refrigerant. Amount charged _____lbs/kg.

2. Electrical

☐ Disconnect all temporary power cords, replace all fuses, connect motor leads, make final electrical inspection.

☐ Power up the motor starter. Check for control voltage at control panel terminals 1TB1-1 and 1TB1-2. _____volts

☐ Check current to the oil sump heater. ____amperes

☐ As the oil heats up, finish any operations not yet completed in preparation for starting the unit.

C. Chiller Start-up

1. Make all preliminary checks.

☐ Oil temp, oil level, chilled water flow, chilled water load available (cooling units on) etc.

2. Start the unit.

☐ If the phase rotation of the electrical power has not been positivly confirmed, the actual rotation of the motor must be checked. Observe the rotation of the motor shaft through the sight glass on the end of the motor at the moment of start-up. Rotation must be CLOCKWISE. If the phase sequence is incorrect, confirmed by observation of the Phase Reversal diagnostic on the UCP2, then L1 and L3 power leads to the starter must be reversed.

☐ As the unit starts and runs, observe closely all operating conditions.

☐ Adjust the oil pressure regulator if necessary to 12 to 18 psi net.

☐ In the Operator Settings menu of the UCP2, place the Purge Operating Mode to 'on' to allow the removal of non-condensables. It may also be necessary to increase the length of the Purge Service Override timer found in the Field Startup Group menu.

☐ After the unit has the system down to design leaving chilled water temp and is under control, and the purge is no longer relieving non-condensables, begin taking the startup test log. Log the unit a minimum of 3 times at 15 minute intervals.

☐ In the Operator Settings menu of the UCP2, return the purge operating mode to 'Adaptive'.

☐ When the logging is complete, shut the chiller down. Allow the unit to sit idle for 5-10 minutes. Attach a piece of clear plastic hose between the 1/2 inch valve at the bottom of the evaporator and the 1/4 inch valve near the top of the evaporator. Open the valves and record or mark permanently the refrigerant level in the hose.
RECORD THIS LEVEL - IT IS VERY IMPORTANT! At some later time, the refrigerant charge can be easily checked and verified.

☐ Restart the chiller and carefully observe the starting and loading sequence.

3. Instructions to the Chiller Operator.
   ☐ Instructions for starting, operating, and shutting down.

   ☐ Instructions for logging the unit.

   ☐ Instructions for periodic maintenance.

D. After 2 weeks of operation.

1. Remove the water box covers on both the evaporator and condenser. Mechanically brush clean all the tubes. This is to assure there is no debris blocking any of the tubes. A piece of debris partially blocking a tube may cause that tube to fail prematurely.

2. Replace the oil filter with the spare oil filter included in the control panel at time of shipment.

E. Comments and/or Recommendations:

_____
_____
_____
_____
_____
_____
_____
_____

_____
Service technician **Signature** **Date**

TRANE

Start-Up Test Log
Water Cooled CenTraVac® With UCP2 Control Panel

Job Name _____ Job Location _____

Model # _____ Serial # _____ Start Date _____

Sales Order # _____ Ship Date _____ Job Elevation (Ft. above sea level) _____

STARTER DATA:

Manufacturer _____

Type _____

(Star-Delta, X-Line, AutoTrans, Primary Reactor, Solid-State, Etc.)

Vendor ID #/Model # _____

Volts _____ Amps _____ Hz _____

MOTOR DATA:

Manufacturer _____

Type and Frame _____

Drawing # _____

Serial # _____

COMPRESSOR DATA: (RTHB Units Only)

Model # _____

Serial # _____

NAMEPLATE DATA:

RLA _____ KW _____ VOLTS _____ HZ _____

DESIGN DATA: (From Design Specification)

RLA _____ KW _____ VOLTS _____ HZ _____

HEAT RECOVERY PERFORMANCE:

RLA _____ KW _____ VOLTS _____ HZ _____

CURRENT TRANSFORMER

PART NUMBERS: ("X" Code and 2-Digit Extension)

Primary CT's:

X _____-_____

X _____-_____

X _____-_____

Secondary CT's:

X _____-_____

X _____-_____

X _____-_____

(Note: Secondary CT's are used only on remote starters "by others" and high voltage applications)

START-UP ONLY

CHILLER CONDITION:

On Arrival:

☐ Machine Vacuum = _____ mm (CVHE/F)

Or

☐ Machine Pressure = _____ psig (CVHE/F or RTHB)

At Start-Up:

☐ Machine Vacuum = _____ mm

Or

☐ Machine Pressure = _____ psig

Complete If Pressure Test Is Required:

☐ Vacuum after Leak Check = _____ mm

☐ Standing Vacuum Test = _____ mm Rise in _____ Hours

UNIT REFRIGERANT CHARGE:

_____ lbs of R-_____

HIGH PRESSURE CUTOUT (3S1):

☐ Cut-In = _____ psig ☐ Cutout = _____ psig

SUMMARY OF UNIT OPTIONS INSTALLED:

☐ Tracer Communications Interface

☐ Remote Clear Language Display Module

☐ Options Module

☐ Outdoor Air Sensor

☐ Enhanced Condenser Limit Control

☐ Heat Recovery/Aux. Condenser

☐ Free Cooling Control

☐ Hot Gas Bypass Control

☐ Ice Making Control

☐ Monitoring Package

- ☐ Bearing Oil Temp. Sensors
- ☐ Discharge Temp. Sensor
- ☐ Compressor Phase Volt Sensors

☐ Other _____

Also complete the Commissioning Checklist, Record Sheet and Start-Up/Operation Log

1-27.90-5 — (296)
Supersedes 1-27.90-5 — (594)

CenTraVac®/UCP2 Start-Up and Operating Log

Sales Order # _____ Location _____

Model # _____ Serial # _____

DESIGN CONDITIONS**	CHILLER REPORT:		1ST READING	2ND READING	3RD READING
**From design specification	CHILLER OPERATING MODE				
DEG F _____ →	ACTIVE CHILLED WATER SETPOINT				
DEG F _____ →	EVAP LEAVING WATER TEMP				
DEG F _____ →	EVAP ENTERING WATER TEMP				
DEG F _____ →	CONDENSER ENTERING WATER				
DEG F _____ →	CONDENSER LEAVING WATER				
	ACTIVE CURRENT LIMIT SETPOINT				
GPM _____ →	EVAPORATOR WATER FLOW				
GPM _____ →	CONDENSER WATER FLOW				
	OUTDOOR AIR TEMPERATURE				
	REFRIGERANT REPORT:				
	EVAP REFRIGERANT PRESSURE				
	COND REFRIGERANT PRESSURE				
	SATURATED COND TEMP				
	SATURATED EVAP REFRIGERANT TEMP				
	COMPRESSOR REPORT:				
(12 TO 18 PSID) →	DIFFERENTIAL OIL PRESSURE				
(UNIT 'ON', 115 TO 150 DEG F)	OIL TANK TEMPERATURE				
	DISCHARGE OIL PRESSURE				
	OIL TANK PRESSURE				
DESIGN RLA _____ →	COMPRESSOR PHASE AMPS	A			
DESIGN KW _____ →	COMPRESSOR PHASE AMPS	B			
	COMPRESSOR PHASE AMPS	C			
DESIGN VOLTS _____ →	COMPRESSOR VOLTAGE	AB			
DESIGN HZ _____ →	COMPRESSOR VOLTAGE	BC			
	COMPRESSOR VOLTAGE	CA			
	COMPRESSOR WINDING TEMP	W1			
	COMPRESSOR WINDING TEMP	W2			
	COMPRESSOR WINDING TEMP	W3			
	COMPRESSOR STARTS				
	COMPRESSOR RUNNING TIME				
	BEARING TEMPERATURE 1				
	BEARING TEMPERATURE 2				
	OPERATING OIL LEVEL				

FRONT PANEL CHILLED WATER SETPOINT: _____ DESIGN DELTA TEMP SETPOINT: _____

LEAVING WATER TEMP CUTOUT SETPOINT: _____ LOW REFRIGERANT TEMP CUTOUT SETPOINT: _____

CURRENT OVERLOAD SETTING #1: _____ CURRENT OVERLOAD SETTING #2: _____

EVAPORATOR WATER PRESSURE DROP:		CONDENSER WATER PRESSURE DROP:		PURGE
DESIGN PSIG: _____	GPM: _____	DESIGN PSIG: _____	GPM: _____	RUN HRS _____
ACTUAL PSIG: _____	GPM: _____	ACTUAL PSIG: _____	GPM: _____	SUC TEMP ____ DEG F

MOTOR INSULATION MEG OHMS: @ Megger Voltage _____

TER. 1 TO GND _____ TER. 1-2 _____ TER. 1-4 _____

TER. 2 TO GND _____ TER. 1-3 _____ TER. 2-5 _____

TER. 3 TO GND _____ TER. 2-3 _____ TER. 3-6 _____

TECHNICIAN:

OWNER'S REP:

DATE:

ACTIVE AND HISTORIC DIAGNOSTICS: _____

COMMENTS: _____

Also Complete CVHE/F UCP2 Commissioning Checklist and Record Sheet

1-27.90-5 — (Back) — (296)
Supersedes 1-27.90-5 — (594)

CenTraVac®
Checksheet And Request For Serviceman

To: _____ Trane Service Company

S.O. No.:_____ Serial No.: _____

Job/Project Name:_____

The Following Items Are Being Installed And Will Be Complete By _____

1. CenTraVac:
In place and piped. Do not insulate CenTraVac or adjacent piping. The contractor is responsible for any foreign material left in the unit. ..... ☐

2. Piping:
Chilled water piping connected to:
- CenTraVac ..... ☐
- Air handling units ..... ☐
- Pumps ..... ☐

Condenser and heat recovery condenser (as applicable) piping connected to:
- CenTraVac ..... ☐
- Pumps ..... ☐
- Cooling tower ..... ☐
- Heating loop ..... ☐

Make-up water connected to cooling tower ..... ☐
Water supply connected to filling system ..... ☐
Systems filled ..... ☐
Pumps run, air bled from system ..... ☐
Strainers cleaned ..... ☐

3. Flow Balancing Valves Installed:
Leaving chilled water ..... ☐
Leaving condenser water ..... ☐
Heat recovery condenser leaving water ..... ☐

4. Wiring:
Compressor motor starter has been furnished by or approved by The Trane Company, La Crosse, WI . ☐
Power available ..... ☐
Interconnecting wiring, starter to control panel ... ☐
External interlock (flow switches, water pump aux., etc.) ..... ☐

Motors connected on:
- CenTraVac* ..... ☐
- Chilled water pump ..... ☐

Cooling tower fan rotation checked ..... ☐
Condenser water pump ..... ☐
Heat recovery condenser water pump (as applicable) ..... ☐
Power available for vacuum pump ..... ☐
(115V AC) ..... ☐
All controls installed and connected ..... ☐
All magnetic starters installed and connected ..... ☐

*NOTE: Do not make final connections to compressor motor until requested by Trane Service Representative.

5. Testing:
Dry nitrogen available for pressure testing ..... ☐
Refrigerant-22 available for leak testing if necessary (25 lbs.) ..... ☐

6. Refrigerant On Job Site ..... ☐

7. Gauges, Thermometers And Air Vents
Installed on both sides of evaporator ..... ☐
Installed on both sides of condenser and heat recovery condenser (as applicable) ..... ☐

8. System Can Be Operated Under Load Conditions ..... ☐

9. Electrician, Control Man And Contractor's Representative Are Available To Evacuate, Charge And Test The CenTraVac Under Serviceman's Supervision ..... ☐

In Accordance With Your Quotation And Our Purchase Order Number _____

We Will Therefore Require Your Serviceman On The Job By**_____

This is to certify that the CenTraVac(s) has been properly and completely installed and the applicable items listed above have been completed.

**Advance notification is required to allow scheduling of the start-up as close to the requested date as possible.

1-27.08-6—(1196)
Supersedes 1-27.08-6—(895)

Compliance To ASHRAE Standard 15

Yes No 1. Does the equipment room have a refrigerant monitor/sensor capable of monitoring and alarming within the acceptable exposure level (AEL) of the refrigerant?

Yes No 2. Does the equipment room have an audible or visual alarm (other than the light on the monitor) which is controlled by the monitor?

Yes No 3. Does the equipment room have mechanical ventilation?†

Yes No 4. Is a self contained breathing apparatus available in close proximity of the equipment room?

Yes No 5. Are the purge discharge and the rupture disk piped to the outdoors?

†The mechanical ventilation consists of two flow requirements i.e., a two-speed fan where the high speed is sized by the formula Cfm = 100 × the square root of the pounds of refrigerant of the largest chiller, and low speed is 0.5 Cfm per square foot of the equipment room space. (This requirement is for chillers located within the building which is the most common.)

Owner Awareness Of Safe Refrigerant Handling Procedures

Yes No 1. Has the owner been fully instructed on the proper use of refrigerant 123?

Yes No 2. Was the owner given a copy of the MSDS sheet for HCFC-123?

Yes No 3. Was the owner given a copy of Trane publication "CFC-GUIDE-2, Refrigerant Handling Guidelines"?

Additional time required to complete the start-up and adjustment due to incompleteness of the installation will be invoiced at prevailing rates.

Serial Number _____

Serial Number _____

Serial Number _____

Serial Number _____

Serial Number _____

Checklist Completed By: _____

_____

_____

Signed: _____

Dated: _____

Notice To Trane Service Agency:
A copy of this completed form must be submitted to the CenTraVac Technical Service Department in La Crosse, WI prior to the actual start-up date.

1-27.08-6—(1196)
Supersedes 1-27.08-6—(895)

Annual Inspection Check List and Report:
CenTraVacs® w/ UCP2 Control Panels

Compressor Motor
[ ] Motor continuity check
Good [ ] Open [ ]

[ ] Check and tighten motor terminals

[ ] Meg motor
Phase 1 [ ] Phase 2 [ ] Phase 3 [ ]

[ ] Check nameplate rating
Amps [ ]

Starter
[ ] Check condition of starter contacts
Good [ ] Fair [ ] Replace[ ]

Oil Sump

[ ] Change oil
If oil analysis, refer to program procedure
[ ] Gallons (7) required

[ ] Refrigerant/Oil pump motor ground check
Good [ ] Open [ ]

[ ] Check motor terminal
[ ] Change oil filter

Condenser
[ ] Visually inspect for scaling in tubes;
note findings and make recommendations

Control Circuits
[ ] Low refrigerant temperature sensor check
__ F set point __ F trip point (ice water)

[ ] Leaving Evaporator water temperature sensor check-out
__F set point __F trip point (ice water)

[ ] Condenser High Pressure Switch check-out
__psig set point
__psig trip point

[ ] Check Net Oil Pressure

[ ] Check adjustment and operation of inlet guide vane actuator stepper motor. The stroke of the actuator motor is 10,000 steps/in and

approximately 46,000 to 54.000 steps full stroke. (Note: each machine is unique and must have the 90 number of steps input.)

Leak Test Chiller
Refrigerant and oil analysis for acid content.

[ ] Sample refrigerant and oil for laboratory analysis (attach copy of analysis to next monthly

inspection report)

Purge Unit
[ ] Perform the purge system control check describe in "Control Circuit Diagnostics" in the "Troubleshooting" section of the most current Purge operation and maintenance manual.

Comments: _____

_____

_____

_____

Recommendations: _____

_____

_____

_____

Note: This form is suggested for your use.

TRANE

Installation Operation Maintenance

AFDA-IOM-3

Library	Service Literature
Product Section	Commercial Aftermarket Products
Product	Adaptive Frequency Drive
Model	AFDA
Literature Type	Installation/Operation/Maintenance
Sequence	3
Date	December 1995
File No.	SV-CAP-AFD-AFDA-IOM-3-1295
Supersedes	New

Trane™ Adaptive Frequency Drive

Design Sequence

B0

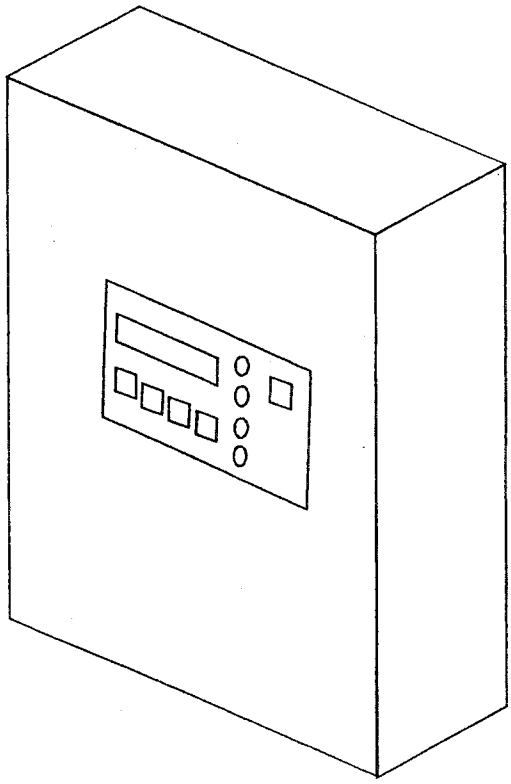

X39640452-01

Since the Trane Company has a policy of continuous product improvement, it reserves the right to change specifications and design without notice. The installation and servicing of the equipment referred to in this booklet should be done by qualified, experienced technicians.

© American Standard Inc. 1995

Table of Contents

WARNING

This manual, including the warnings and cautions inside, must be carefully read and followed by all persons who use or maintain this product, including those who have any responsibility involving its selection, application, service or repair. This drive will perform as designed only if used and maintained according to the instructions. Otherwise, it could fail to perform as designed and persons who rely on this product could sustain serious personal injury or death.

Page	Description
3	**Model Number**
4	**General Information**
4	About This Manual
4	Literature Change History
4	Warnings and Cautions
5	AFD Conversion Package Explanation
5	AFD Nameplate
5	Conversion Package Inspection
6	Conversion Package Contents
7	Physical Dimensions
8	**Introduction**
8	Surge Zone
8	Open Guide Vanes
8	Deadband
9	**Harmonics**
10	**Removing the Old Starter**
10	Preparation
10	Starter Removal Procedure
11	**Installation**
11	Component Mounting Location
12	**Wiring- Power**
12	Non-Bypass
13	Bypass
14	**Wiring - Control**
14	Factory
15	Sensor
16	Non-Bypass
18	Bypass
20	**Wiring - Control Panel**
20	Capacity Control Module CCM
22	100% RLA Calibration Procedure
26	Chiller Controls Wiring
27	**Wiring - Starter (Bypass Only)**
27	Starter Rework (Bypass Only)
28	**Sequence of Operation**
28	Startup AFD Mode
28	Startup Starter Bypass Mode
29	Shutdown AFD Mode
31	**Set-Up**
31	PCM Programmable Variables
32	IGV Position Sensor
33	Parameter Adjustment
34	Surge Line Setup Procedure
35	Circuit Board Jumper Config.
36	**Maintenance**
36	Periodic Maintenance
37	**Wiring Diagrams**

List of Figures and Tables

Page	Description
4	Figure 1 - Typical Unit Nameplate
6	Figure 1a - AFD Version A Controller Component Layout
8	Figure 2 - Speed Adjustment Criteria
11	Figure 3 - Inlet Guide Vane Position Sensor Assembly
12	Figure 4 - Power Wiring Starter Non-Bypass
13	Figure 5 - Power Wiring Starter Bypass
15	Figure 6 - Sensor Wiring
15	Figure 6a - Signal Conditioning Module
17	Figure 7 - AFD Non-Bypass
19	Figure 8 - AFD Bypass
20	Figure 9 - CPR Non-Bypass
21	Figure 10 - CPR Bypass
22	Figure 11 - RLA Calibration Worksheet
24	Figure 12 - Classic Black Panel Non-Bypass
25	Figure 13 - Classic Black Panel Bypass
26	Figure 14 - UCP1 Wiring
27	Figure 15a - Starter Rework
27	Figure 15b - Starter Rework
30	Figure 16 - AFD Control Display
32	Figure 17 -Signal Conditioning Module Jumper Configuration
34	Figure 18 - PC Slope
34	Figure 18a - Speed Adjustment Criteria
35	Figure 19 - Programmable Control Module (PCM)
35	Figure 20 - AFD Control Board
38	Figure 21 - UCP1 Non-Bypass Wiring Diagram
40	Figure 22 - UCP1 Bypass Wiring Diagram
42	Figure 23 - Classic Black Panel Non-Bypass Wiring Diagram
44	Figure 24 - Classic Black Panel Bypass Wiring Diagram
46	Figure 25 - Control Package Replacement (CPR) Non-Bypass Wiring Diagram
48	Figure 26 - Control Package Replacement (CPR) Bypass Wiring Diagram

Tables

Page	Description
7	Table 1 - Current Transformers
7	Table 2 - Physical Dimensions
14	Table 3 - Factory Wiring
23	Table 4 - % Current Control DIP Switch Settings
31	Table 5 - AFD Controller Display
33	Table 6 - User Selectable Functions

Model Number

Unit Model Number

For service and replacement purposes, the Trane Model AFDA Adaptive Frequency Drive (AFD) and the AFDA controller are assigned a multiple-character alphanumeric model numbers that precisely identifies each unit. The model number key is shown here. Use of the model number will enable the owner/operator, installing contractor, and service technician to define the characteristics of any AFDA unit. Be sure to refer to the model number when ordering replacement parts or requesting service.

Sample Model Number

Model No.	AFD	A	0500	F	A0	E	0	0	0	0	0	0	0	A	0	0	A	0	0	0	0
Digit No.	1	2	3	4	5	6	7	8	9	10	11	12	13	14	15	16	17	18	19	20	21	22	23	24	25	26	27

Digits 1,2,3
Adaptive Frequency Drive
AFD

Digit 4
Developmental Sequence
A

Digits 5,6,7,8
RLA
Running Load Amps - Motor

Digit 9
Unit Voltage (Compressor)
F = 460V-60Hz-3Ph
G = 480V-60Hz-3Ph
H = 575V-60Hz-3Ph
S = Special

Digits 10,11
Design Sequence
A0 = First Design Sequence
B0 = Second Design Sequence

Digit 12
Frequency Drive Type
A = PCM Controls
B = UCP2 Controls

Digit 13
Agency Listing
0 = None
1 = U.L. (includes Canada U.L.)

Digit 14
Analog Output Board
0 = None
A = Analog Signal Buffer

Digit 15
Serial Communication Interface
0 = None
1 = Serial Communication Interface

Digit 16
Volt read out - UCP2
0 = None
A = Volt read out - UCP2

Digit 17
Surge Protector & Lightning Arrester
0 = None
1 = Surge protector & lightning arrester

Digit 18
Input Line Reactors
0 = None
A = Input line reactors

Digit 19
Output Contactor
0 = None
1 = Output Contactor

Digit 20
Manual Bypass Solid State
0 = None
A = Manual Bypass solid state

Digit 21
Clean Power Rectifier
0 = None
1 = Clean Power Recitifier

Digit 22
Drive Isolation Transformers
0 = None
A = Drive Isolation Transformers

Digit 23
Retrofit Bypass
0 = None
A = < 348 RLA
B = 349 - 522 RLA
C = 523 - 696 RLA

Digit 24
Existing Controls
0 = None
1 = Non-Micro Controls
2 = UCP1 Controls
3 = UCP2 Controls

Digit 25
3-KVA Transformer
0 = None
A = 3-KVA Transformer

Digit 26
Control Design Sequence (PCM)
0 = None (UCP2)
A = 1st Design Sequence
D = Current Design Sequence

Digit 27
Manufacturer
0 = Cutler-Hammer

General Information

About This Manual

The instructions outlined in this booklet describe the procedures for retrofitting a Trane Version A Adaptive Frequency Drive. The controls are designed to be added to an existing Trane chiller without replacing the present control system. The operation and maintenance of the controls are explained later in this manual. This manual is intended for use by experienced service personnel.

Specific information for the Accutrol 700 Drive is found in the manufacturer's Instruction Manual included in the ship/with literature packaged in the AFD:

- Instruction Manual entitled "Installation, Start-up and Maintenance Manual CCPWM Adjustable Frequency AC Controller 100-600 HP Accutrol 700"

Literature Change History

AFDA-IOM-3 (January 1996)

Original issue of the manual containing design sequence "B0" and Controls design sequence "D".

Warnings and Cautions

Note that warnings and cautions appear in appropriate sections throughout this manual.

⚠ WARNINGS!
are provided to alert installing contractors and other personnel to potential hazards that could result in serious personal injury or death.

⚠ Cautions:
are provided to alert personnel to conditions which could result in moderate or minor personal injury or damage to equipment or property.

Your personal safety and the proper operation of this machine depend upon precautions. The Trane Company assumes no liability for installation or service procedures performed by unqualified personnel.

Figure 1
Typical Unit Nameplate Data

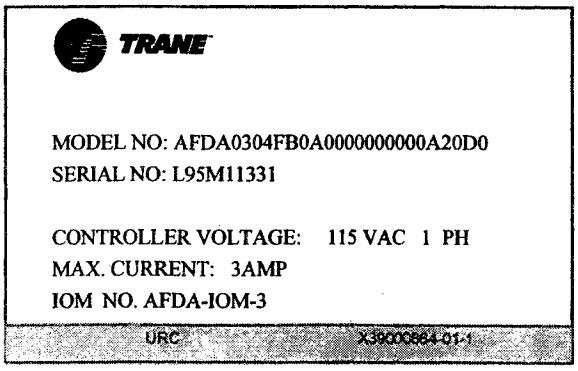

General Information

Adaptive Frequency Drive (AFD) Conversion Package Explanation

The Adaptive Frequency Drive Package comes in two configurations:

- Bypass option - Enables the drive to be wired through an existing Wye-Delta starter. This feature is useful for two reasons. The included transfer switch allows the chiller to operate with the existing electro-mechanical starter - (1) while servicing the AFD or (2) during prolonged periods of operating near the chiller's full capacity when AFD is not needed.
- Non Bypass option - The chiller is wired directly through the AFD.

The Version A controller is intended for operation with one of the following control systems:

- UCP1
- Control Package Replacement (CPR) Kit
- Trane "Classic" black panel - With this system, the panel must have a Capacity Control Module (CCM) designated MOD0012, MOD0061 or MOD0182. "Classic Black" panels utilizing the "AGM" module will need to be retrofitted with a CCM module specified above.

Note: When retrofitting an AGM with a CCM, the leaving and/or return chilled water sensor needs to be replaced.

The Version A controller is not intended for use on pneumatic systems.

Adaptive Frequency Drive Nameplate

The Accutrol 700 has a nameplate similar to standard Trane starters. Refer to the model number printed on the Version A control panel nameplate when ordering replacement parts or requesting service for either the controller or the drive. Refer to Figure 1 for an example of a typical unit nameplate on the AFDA control panel.

Conversion Package Inspection

Before installing the AFD, compare the data on the controller and drive nameplates with the corresponding ordering and shipping information to verify that the proper AFD conversion package was shipped.

If a thorough inspection of the conversion package reveals damage or material shortages, file the claims with the carrier immediately and specify the extent and type of damage found. The Trane Company assumes no responsibility for transportation or jobsite damage. If damaged equipment is installed, Trane will not accept any claims involving that equipment.

General Information

Figure 1a - AFD Version A Controller Component Layout

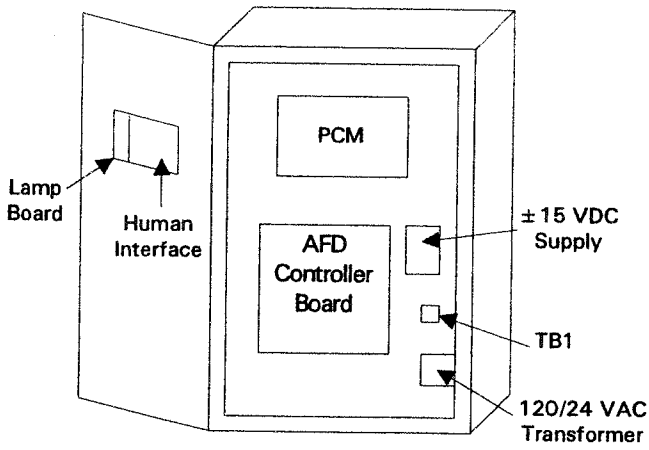

Conversion Package Contents

Each conversion kit includes the following items:

- Version A control panel with components as shown in Figure 1a
- Accutrol 700 Drive with I/O Board
- Two (2) Pressure Transducers with cables for monitoring the evaporator and condenser pressure
- Inlet Guide Vane (IGV) Position Sensor with signal conditioning and mounting hardware
- Transfer Switch (optional) with interlocks
- Literature including AFDA-IOM-3 and Accutrol instruction manual

Field Provided Items

- Control Power Circuit Breaker
- Power Wiring
- #16 AWG Wire for 120 VAC Control Circuits
- Beldon Type 8760 Wire for <30 Volt Circuits
- Junction Box (for Bypass installations only)
- Current transducer TDR0269 and resistor RES0913 for Classic Black controls without bypass
- Pilot relay (for Classic Black Bypass and Non-Bypass installations)

General Information

The existing control system dictates how many current transformer(s) are required. Existing CT's can be used. Reference Table 1 to determine the CT arrangement necessary for your particular control system. The large donut type (line) CT must be sized according to chiller RLA, to step line current to a 5 amp signal. The small secondary current transformer(s) (if applicable) steps the 5 amp signal to an mA signal. The small current transformer part number is TRR0452. For Classic Black without bypass system, the TDR0269 current transducer and the RES0913 resistor will need to be ordered. (Refer to Figure 23 for wiring.)

- Wye-Delta Starter (optional)
- Junction Box (optional)
- Motor Terminal Junction Box (Non-bypass, unit mounted starter)

Note: Refer to Figures 4 and 5 for location of the components.

Table 1 - Current Transformers

Control System	Line CT(s) Required	Secondary CT(s) Required	CT5 Current Transducer Required
UCP1 with Bypass	3	3	No
UCP1 without Bypass	1	1	No
"Classic" black panel with Bypass	3	None	No
"Classic" black panel without Bypass	1	None	Yes
CPR with Bypass	1	None	*Yes
CPR without Bypass	1	None	*Yes

*Current Transducer is already in place in the CPR panel.

Note: CT's will be located in the starter panel for bypass systems and in the drive panel for non-bypass systems.

Physical Dimensions

Table 2 summarizes approximate dimensions for the AFD.

Table 2 - Physical Dimensions

Description		Dimensions	Weight
Drive	180 RLA	20" w x 90" h x 21" d	~ 800 lbs.
	240 - 304 RLA	28" w x 90" h x 21" d	~ 1000 lbs.
	360 - 734 RLA	60" w x 90" h x 21" d	~ 2000 lbs.
Transfer Switches	< 348 RLA	23 7/8" w x 54 1/4" h x 12 1/2" d	140 lbs.
	349 - 522 RLA	24 7/8" w x 63 3/4" h x 14 1/8" d	170 lbs.
	523 - 696 RLA	24 7/8" w x 63 3/4" h x 14 1/8" d	175 lbs.
Controller	—	22 1/2" w x 28 1/2" h x 4 1/8" d	~ 70 lbs.

Introduction

The Trane Version A - Adaptive Frequency Drive package provides increased energy efficiency at partial load conditions by decreasing the speed (reducing frequency) of a centrifugal compressor motor. The Version A controls accomplish this by using the Inlet Guide Vane position to adjust the load on the chiller. Since the chiller operates most efficiently near surge conditions; the evaporator pressure and the condenser pressure and frequency are used to create a **pressure coefficient** that predicts where surge will occur. Manual or automatic adjustment of the Version A control to follow the "surge line" will fine tune this prediction to allow the system to control at a safe minimum speed in all operating conditions for a given chiller.

The Version A controls allow for five different operating scenarios (see Figure 2). They are :

Surge Zone - When surge is predicted, the frequency is increased in order to enter a more stable operating region. If surging continues at the maximum speed, the controls will shut down the chiller to protect the compressor.

<70% [IGV_MIN] Open Guide Vanes (Partial Load) - The controls will decrease speed until the surge boundary deadband is reached or at a minimum speed of 42 Hz. When the inverter decreases speed, the chiller controls will sense a need to increase capacity and open up the guide vanes thereby forcing control strategy into the next region.

70% [IGV_MIN] to 90% [IGV_MAX] Open Guide Vanes - In this range, frequency is not adjusted, allowing the guide vanes to accommodate changing load conditions.

>90% [IGV_MAX] Open Guide Vanes - The AFD will gradually ramp up to 60 Hz. (maximum speed) to allow the guide vanes to modulate for capacity control.

Deadband - In this region, the frequency is not adjusted.

See the Setup section for further explanation of the Programmable Control Module (PCM) parameters in brackets [ ].

Figure 2 - Speed Adjustment Criteria

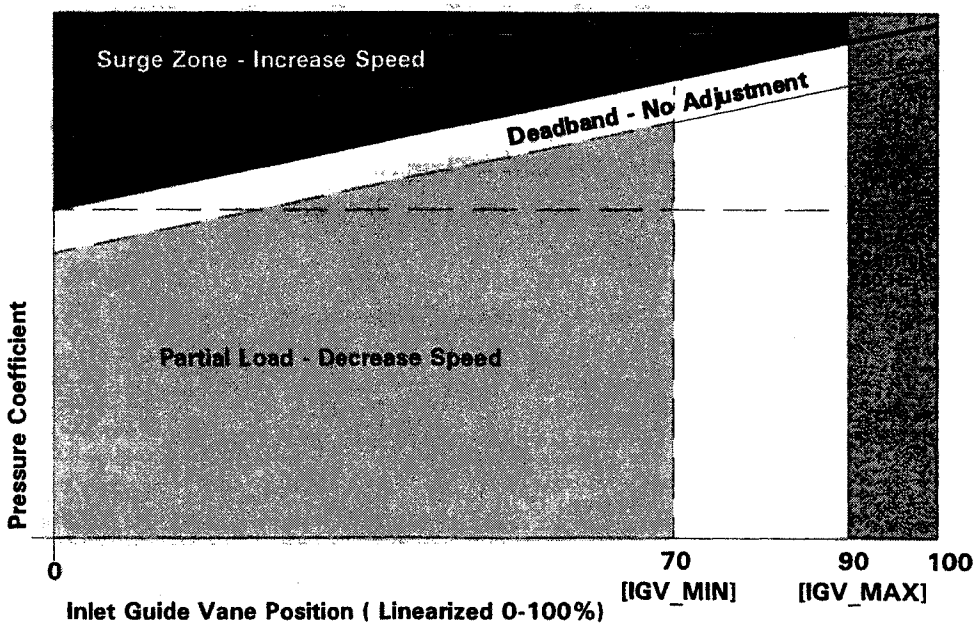

Harmonics

Additional harmonic currents are added to the line by the Adaptive Frequency Drive, as with any non-sinusoidal electronic power converter such as a frequency inverter. This can affect other devices on the line if they are susceptible to the voltage distortion created. The two main factors in voltage distortion are total impedance of the system of components on a power line and current distortion injected back on the line by all devices.

Voltage distortions can, in rare circumstances, create failure of capacitor banks. Depending on the physical location of power lines, circuitry such as telephone equipment and other sensitive devices may also be effected.

IEEE 519 (Standard for Electrical Power Distortion) contains suggested maximum levels of harmonics for specific applications. If there is concern about equipment, a harmonic analysis may be beneficial before installing a drive. These results can suggest methods of protecting equipment from potentially harmful effects of distortion. Contact the local sales office for complete analysis information.

Removing the Old Starter

Note: This section applies only to non-bypass installations.

Preparation

Turn off the main power disconnect to the chiller.

⚠ WARNING!
To prevent injury or death due to electrical shock, disconnect electrical power source before making electrical connections.

Starter Removal Procedure

1. Disconnect and remove the Control Power Transformer (1T1).

2. Remove the line CT's and the Solid State Overload (if present).

3. Disconnect main power lines at L1, L2 and L3.

Note: Keep the items listed above if they are to be re-used on the new drive panel.

4. Disconnect T1 through T6. The motor leads must be connected at the inverter to join T1 to T6, T2 to T4 and T3 to T5 or a bus bar for the motor terminal junction box (field fabricated).

5. Move fuse blocks for F1, F2, F3 and F4 to the new AFD drive panel on older CTV's.

6. Remove starter from mounting pad or from the motor terminals. For a unit mounted starter, a field-supplied motor terminal junction box is required. Move the transformer 480 volt side fusing to the new AFD panel.

7. Reconnect all transformers and wiring.

Installation

Component Mounting Location

Accutrol 700 Drive - The drive should be located and mounted according to the procedures in the Instruction Manual included with the AFD literature package.

Version A AFD Controller - The controller is intended as an overlay to existing controls. Trane suggests mounting the controller on the wall adjacent to the drive and optional existing starter or building a stand so that the controller may be floor mounted.

⚠ Caution:
Do not unit mount the controls on the chiller. Doing so may cause damage due to vibration.

Transfer Switch (optional) - The switch should be wall mounted in an area that is accessible for wiring from the starter and the AFD Drive. Ideally, this is between the starter and the drive.

Junction Box (Bypass installations only) - Wall mount in a convenient location. See Figure 5 for wiring details.

Inlet Guide Vane Position Sensor - Use the provided bracket to mount on the Inlet Guide Vane Actuator. Assemble as shown in Figure 3.

Signal Conditioning Module - Mount the enclosure on the inlet guide vane position sensor bracket. See Figure 6 for wiring details.

Condenser Pressure Transducer - Install **vertically** in the vapor space with the wires pointing upward. Tee out of existing lines to maintain the refrigerant charge. See Figure 6 for wiring details.

Evaporator Pressure Transducer - Same as for the Condenser. See Figure 6 for wiring details.

Relay Board (Optional bypass) - Mount in starter using standoffs provided. See Figure 15b for wiring details.

Figure 3 - Inlet Guide Vane Position Sensor Assembly

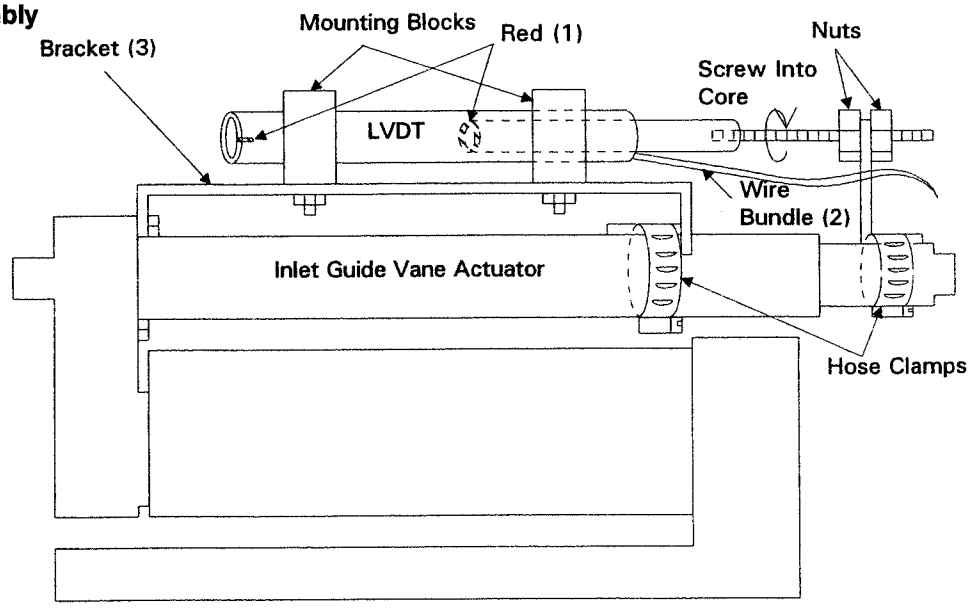

Notes:

1. Red on end of core and body must be oriented as shown to ensure proper operation.
2. Note location of leads. Make sure wire bundle is free to move as actuator strokes in and out.
3. Bracket can be side mounted if space is not available on top of the actuator.

Wiring - Power

⚠ WARNING!
To prevent injury or death due to electrical shock, disconnect electrical power source before making electrical connections.

⚠ Caution:
Do not cut AFD enclosure to provide electrical access; components and wiring could be damaged causing electrical failure. Removable panels have been provided for this purpose. Refer to installation information shipped with the AFD.

Non-Bypass

All power wiring must be done with the power off from the main disconnect. The lines from the drive to the compressor motor should not exceed 100 feet. Use the existing power wires from the line voltage to the motor. Figure 4 shows the power wiring for this configuration. Add an additional control power disconnect to the system. Remove the 3k VA control power transformer from the old starter and mount in the adaptive frequency drive.

Figure 4 - Power Wiring Start-up Non-Bypass

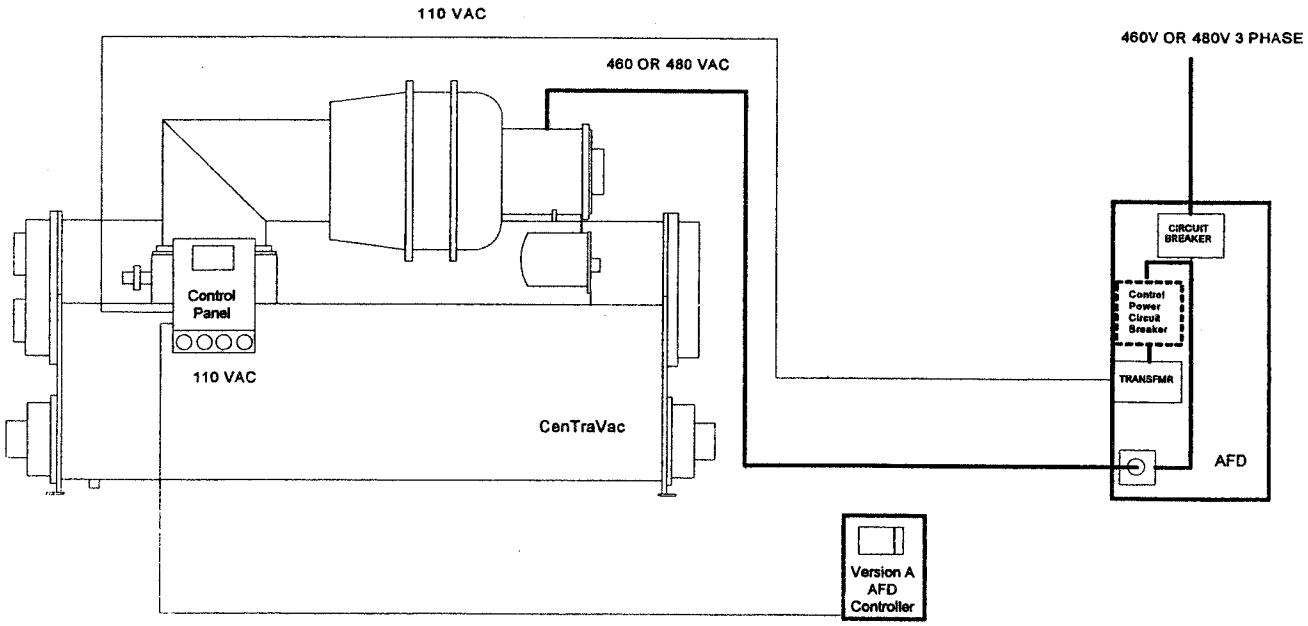

Note: The 3kVA control power transformer and one of the line CT's are moved from the starter to the AFD. The control circuit breaker is added for the AFD.

Wiring - Power

⚠ WARNING!
To prevent injury or death due to electrical shock, disconnect electrical power source before making electrical connections.

⚠ Caution:
Do not cut AFD enclosure to provide electrical access; components and wiring could be damaged causing electrical failure. Removable panels have been provided for this purpose. Refer to installation information shipped with the AFD.

Bypass

All power wiring must be done with the power off from the main disconnect. The lines from the drive to the compressor motor should not exceed 100 feet. The transfer switch must be installed as shown below. Connect the power wiring as shown in Figure 5.

Figure 5 - Power Wiring
Start-up Bypass

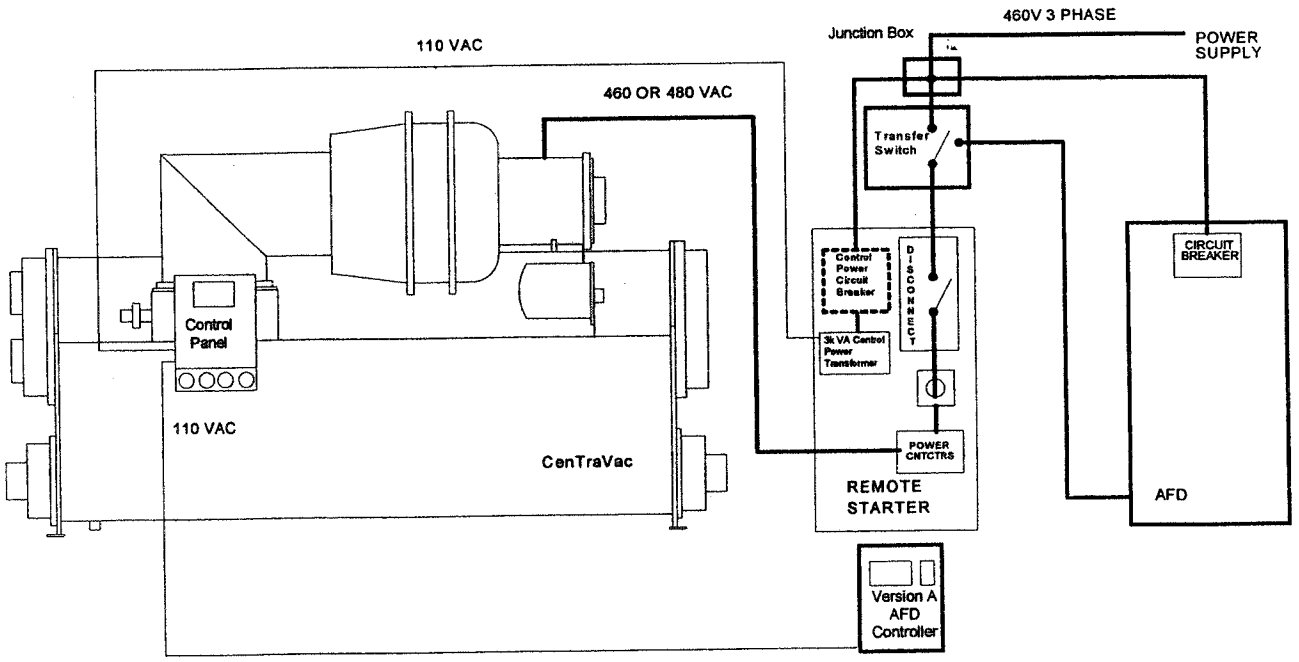

Wiring - Control

Control wiring to the AFD Controller Board is denoted by plug numbers (J*). The numbers are silk screened on the board behind the plugs. A ▲ indicates where pin 1 on the connector is located. "J" terminal block numbers are located on the relay board and AIP, AOP, BIP and BOP are located on the Programmable Control Module (PCM).

Factory Wiring

Table 3 summarizes all factory wiring.

Table 3 - Factory Wiring

From	To	Wire Number
J1-1	120 VAC Terminal Block Hot (TB1)	201A
J1-2	120 VAC Terminal Block Neutral (TB1)	201B
J2-1	120 VAC:15VDC Power Supply	202A
J2-2	120 VAC:15VDC Power Supply	202B
J2-3	120 VAC:15VDC Power Supply	202C
J4-1	120 VAC:24VDC Power Supply (X2)	204A
J4-2	120 VAC:24VDC Power Supply (X1)	204B
J4-3	TB1-1 (PCM)	204C
J4-4	TB1-2 (PCM)	204D
J4-5	J51-1	204E
J4-6	J51-2	204F
J10-1	TB4-1	210A
J10-2	TB4-2	210B
J18-1	TB2-5	218A
J18-2	TB2-6	218B
J20-1	TB2-7	220A
J20-2	TB2-8	220B
J22-1	TB2-9	222A
J22-2	TB2-10	222B
J26-1	TB4-7	226A
J26-2	TB4-8	226B
J28-1	TB4-13	228A
J28-2	TB4-14	228B
J28-3	TB5-1	228C
J36-1	TB2-13	236A
J36-2	TB2-14	236B
J47-1	J2-1	247A
J47-2	J2-2	247B
J48-1	TB2-11	248A
J48-2	TB2-12	248B
J49-1	TB5-4	249A
J49-2	TB5-3	249B
J50-1	TB5-7	250A
J50-2	TB5-10	250B
J52-1	TB5-11	252A
PS x-former pin 4	120 VAC Terminal Block Hot (TB1)	J1
PS x-former pin 1	120 VAC Terminal Block Neutral TB1)	J2
24 VAC x-former H4	120 VAC Terminal Block Neutral (TB1)	J3
24 VAC x-former H1	120 VAC Terminal Block Hot (TB1)	J4
TB5-2	TB5-5	J5
TB5-5	TB5-8	J6
TB5-8	TB5-11	J7
Fuse	120 VAC Terminal Block Hot (TB1)	J8
Transient Suppressor	Line side of fuse	None
Transient Suppressor	120 VAC Terminal Block Neutral (TB1)	None
Transient Suppressor	120 VAC Terminal Block Hot (TB1)	None
Wire Harness from PCM to Human Interface		None

Sensor Wiring

A. Evaporator Pressure Transducer - Connect as shown in Figure 6.

B. Condenser Pressure Transducer - Connect as shown in Figure 6.

C. Inlet Guide Vane Position Sensor (IGV Position Sensor) - Refer to Figure 3 for assembly. Do not extend the leads provided. The factory supplied cable length of the IGV Position Sensor leads is six (6) inches.

D. Signal Conditioning Module - Mount the module inside the box provided as follows. Remove the four screws securing the box cover to the base. Center the module in the box; then attach with the two screws provided. The potentiometers and the terminal block on the board must be accessible. Remove the wiring knockout on the cover and reinstall the cover with the four screws. Mount on the inlet guide vane position sensor bracket. See chart and Figure 6a below.

Figure 6 - Sensor Wiring

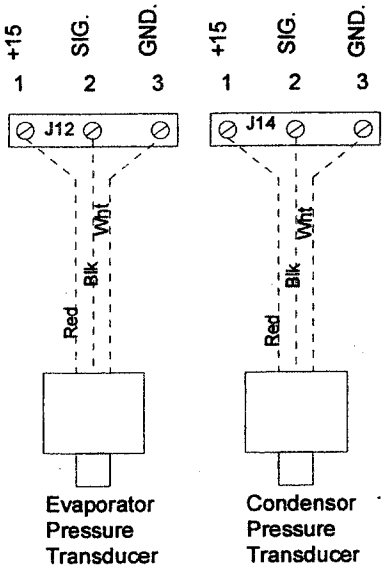

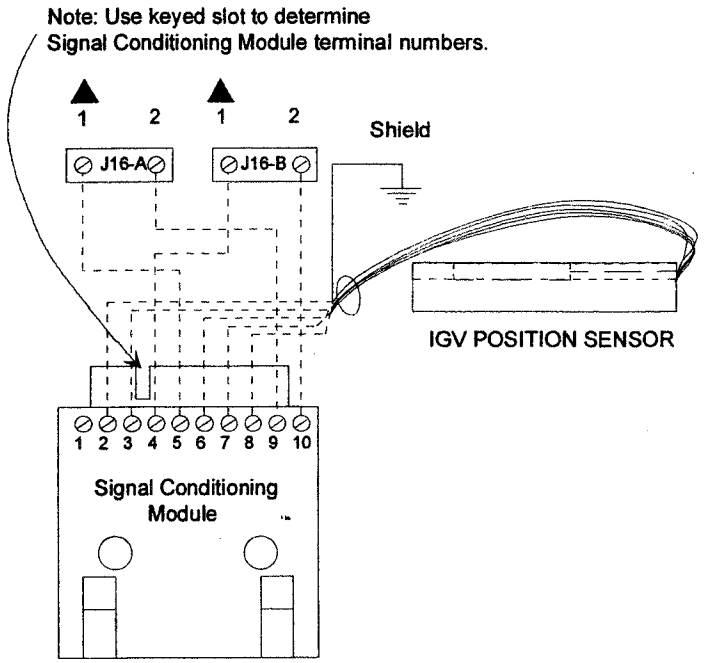

Signal Conditioning Module Connections	
6 inch Leads	
Pin	
1	None
2	Brown or Yellow/Red - LVDT
3	Yellow or Yellow Black - LVDT
4	J16 - B1
5	J16 - A1
6	Red - LVDT
7	Blue and Green - LVDT
8	Black - LVDT
9	J16 - A2
10	J16 - B2

Figure 6a - Signal Conditioning Module Assembly

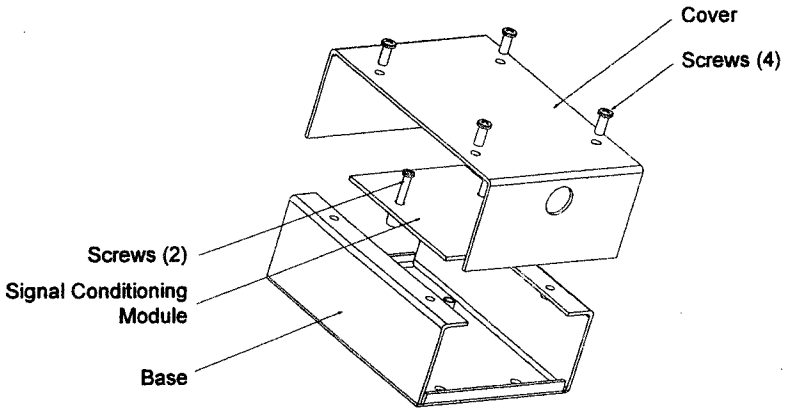

Wiring - Drive

Non-Bypass

See Figure 7 for example.

A. Drive Terminal Block TB5

TB5 Drive Terminal	Description	Other Connection
1	Speed 0-10V	AOP1-
2		AOP1+
24	Motor Load	J24-1+
25		J24-2-

B. I/O Board Terminal Block TB6

TB6 Drive Terminal	Description	Other Connection
1	Inv. Start/Run	J38-2
2		J8-2
34	Inverter * Running	BIP2-1
35		BIP2-2
37	Inverter * Ready	BIP3-1
38		BIP3-2
40	Inverter Up To Speed *	J11-1
41		J11-2
32	Classic Black Only	Customer Supplied Relay
46		

* Refer to Table 5 before Start-up for settings.

C. Oil Pump Interlock (1RY1) Terminal Block 2TB1

2TB1 Drive Terminal	Description	Other Connection
7	UCP1 Only	1TB5-9
9		1TB5-11
7	Classic Black Only	21
9		F2
7	CPR Only	12
9		LL1

D. The Control Power Transformer (1T1) must be installed in the inverter. The CPT (1T1) should be powered directly from the line side of the inverter power section.

- For UCP1 installations - one donut CT and one auxiliary CT must be installed in the inverter. (See wiring to J34A).
- For Classic Black/CPR installations - one donut CT is required and is wired to the CT5 current transducer.

Figure 7 - AFD Remote Wiring
Non-Bypass

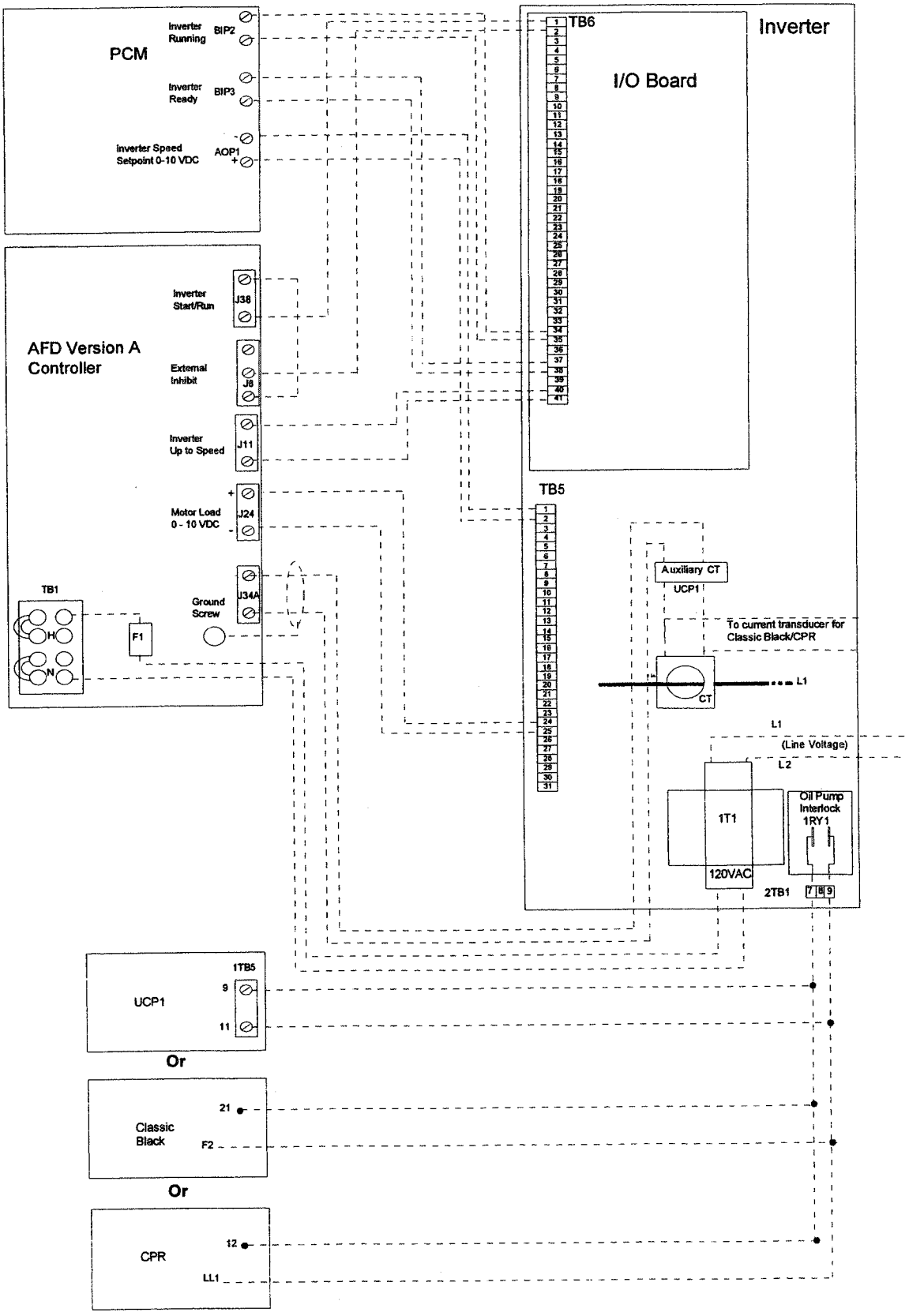

Wiring - Drive

Bypass

See Figure 8 for example.

A. Drive Terminal Block TB5

TB5 Drive Terminal	Description	Other Connection
1	Speed 0-10V	AOP1-
2		AOP1+
24	Motor Load	J24-1+
25		J24-2 -

B. I/O Board Terminal Block TB6

TB6 Drive Terminal	Description	Other Connection
1	Inv. Start/Run	J38-2
2		J8-2
34	Inverter * Running	BIP2-1
35		BIP2-2
37	Inverter * Ready	BIP3-1
38		BIP3-2
40	Inverter Up To Speed *	J11-1
41		J11-2

* Refer to Table 5 before Start-up for settings.

C. Oil Pump Interlock 1RY1 will be parallel to the interlock through 1M aux.

2TB1 Drive Terminal	Description	Other Connection
7	Bypass Relay Board	J44-1
9		J44-2

D. The bypass board (see Bypass wiring Figures 22, 24 and 26) is added to allow switching between interlocks.

Figure 8 - AFD Remote Wiring Bypass

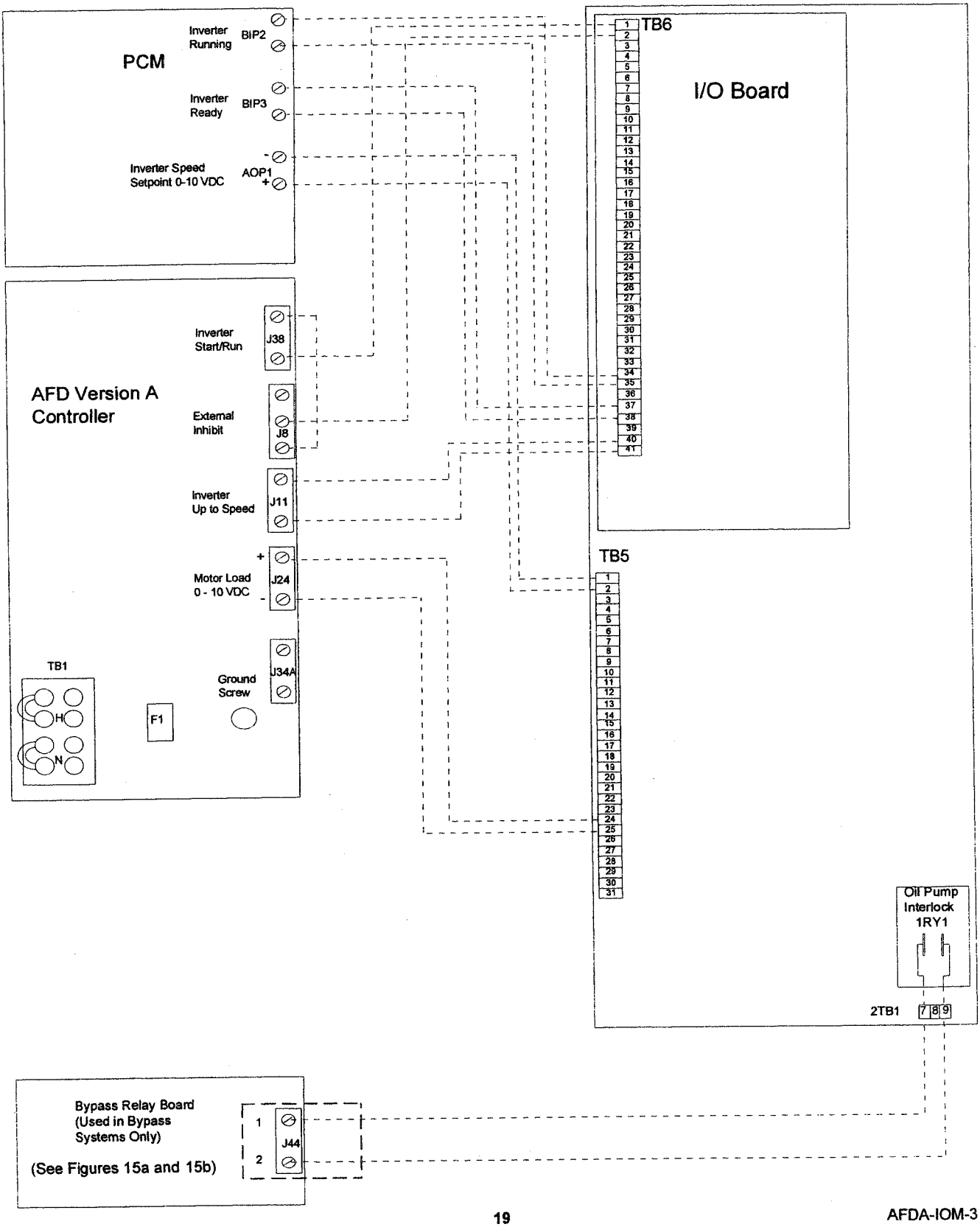

Wiring - Control Panel

Capacity Control Module (CCM)

Two basic systems exist using the CCM; one is a Control Package Replacement (CPR) retrofit of a pneumatic control system and the other is the original Classic Black control panel. (For UCP1 wiring see page 26.)

Wire CPR Non-bypass as shown in Figure 9. Wire Classic Black panel Non-bypass as shown in Figure 12.

Wire CPR Bypass as shown in Figure 10. Wire Classic Black panel Bypass as shown in Figure 13.

Installation Notes

A. Start/Run Control - The start and run signals must be jumpered together. The signal is taken from the start string after the chiller safeties. (Figure 9, "J9")

B. Current Monitoring Circuit -

In Non-Bypass Systems:

- For Classic Black systems, the A1 solid state overload is no longer used. A current transducer like the one used in the CPR kit is required. This will produce the negative DC load proportional signal that is connected to the V1-V2 terminals on the CCM (Figure 12). The current transducer should to be mounted in the inverter. Refer to Page 7 for part numbers of the items required.
- For CPR systems, the current transducer will still be used to produce the load proportional signal (Figure 9).

Figure 9 - CPR Wiring Non- Bypass

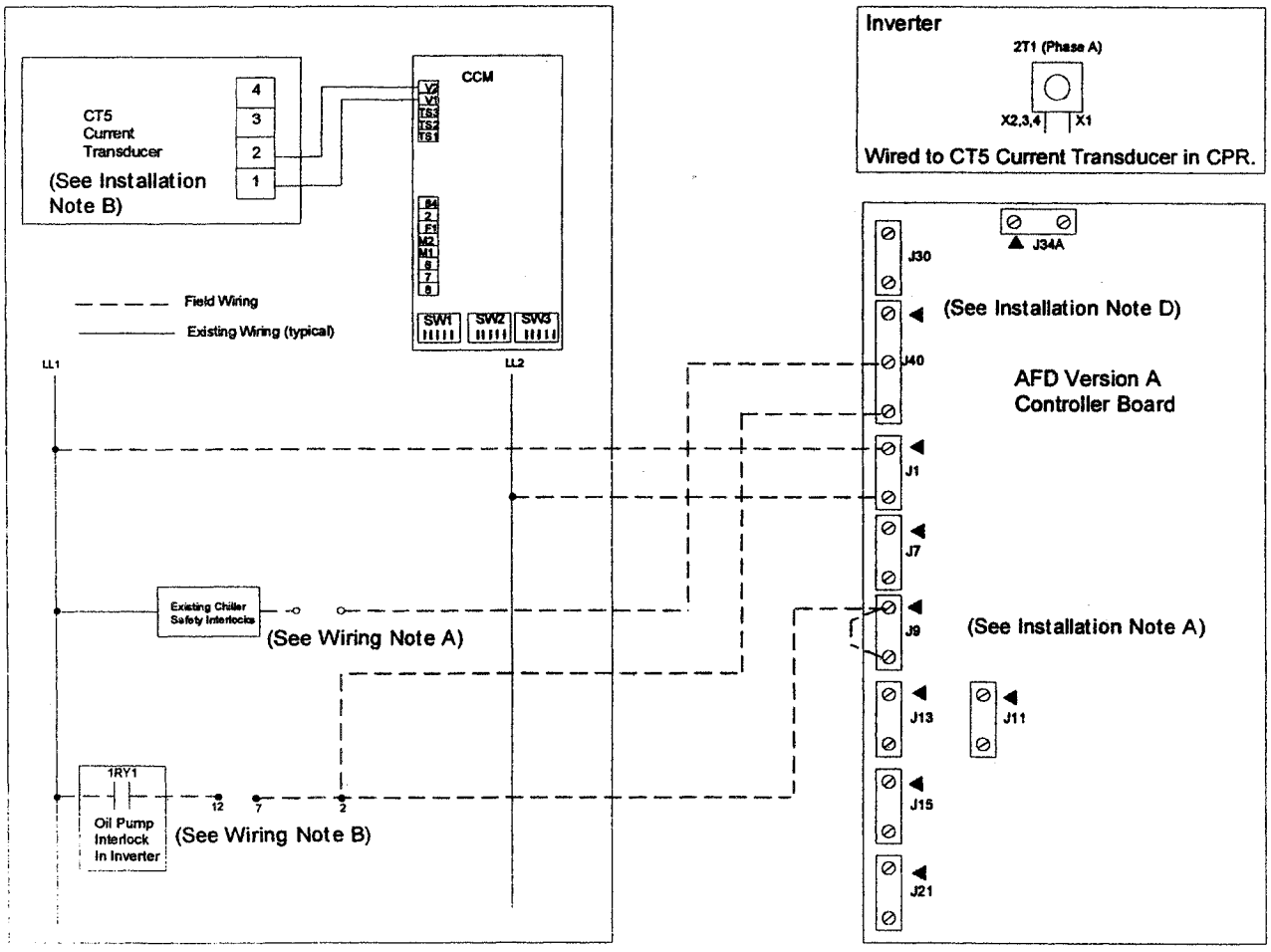

Wiring Notes:

A. External Inhibit should be inserted into the start string in series with terminal TB1-8 or TB1-9 in the CPR panel.

B. Terminals are in existing pneumatic control panel.

Wiring - Control Panel

In Bypass systems:

- For Classic Black systems (see Figure 13) the A1 overload is kept to generate the V1-V2 load proportional signal for the CCM and to provide motor protection during operation of the electro-mechanical starter.
- For CPR systems (see Figure 10) the CT5 current transducer is kept to provide the load proportional signal for the CCM.

C. Transition (Starter Mode) - For Classic Black systems with bypass, the transition is controlled by the A1 overload. For CPR systems with bypass, transition is still controlled by the existing timed relay in the starter panel.

D. AFD Fault - The N.O. contacts of J40 must be inserted into the start string.

E. Dip Switches - On the CCM SW1 must be set for the RLA of the chiller. See following section and Table 4 for detailed information on proper settings. For Classic Black with bypass systems, the A1 overload has been calibrated to accommodate the CT ratio. The CCM should be calibrated so that 0-100% RLA = 0 to -8.25 Vdc.

Note: The calibration instructions in the Calibration Procedure are not used for this configuration.

Figure 10 - CPR Wiring Bypass

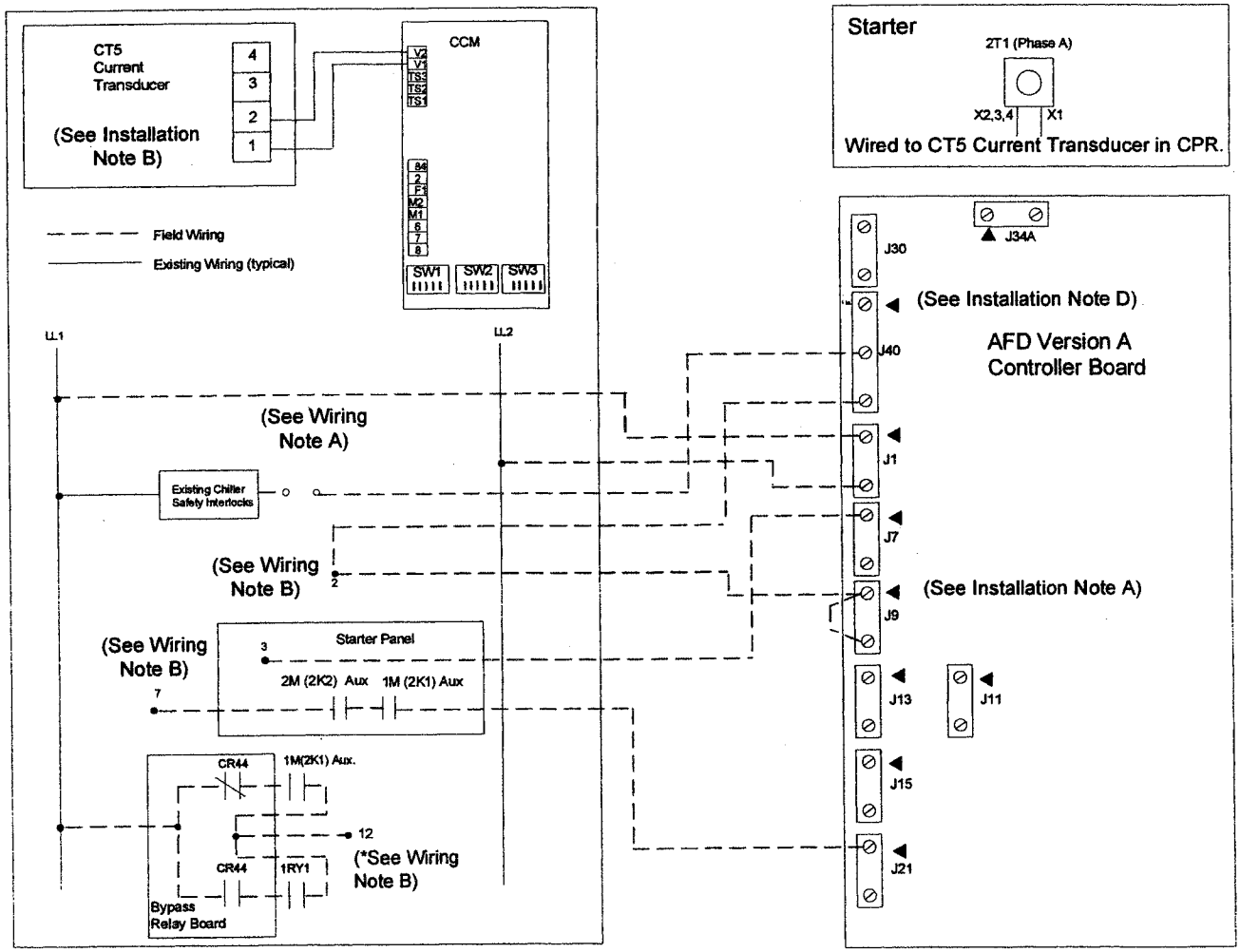

Wiring Notes:

A. External Inhibit should be inserted into the start string in series with terminal TB1-8 or TB1-9 in the CPR panel.

B. Terminals are in existing pneumatic control panel.

Wiring - Control Panel

100% RLA Calibration Procedure

Note: This procedure is used to calibrate the Capacity Control Module (CCM) for 100% RLA in systems utilizing a CT5 current transducer to produce the load proportional signal.

⚠ WARNING!
To prevent personal injury or death due to electrocution, which can result from using improper measurement techniques, the measurements required for this procedure should be made only by experienced technicians familiar with servicing chiller starters.

Procedure

1. Calculate the actual rated load amps on the worksheet below: First, enter the nameplate RLA and nameplate voltage. Then enter the highest voltage of the three power legs. If no leg is higher than the design voltage, enter the nameplate voltage in the "measured volts" space.

Example: A 350-amp, 480-volt nameplate motor is derated to a actual RLA of 329 amps when the measured voltage is 490 volts.

2. Calculate current transformer secondary amps on the worksheet below by dividing the desired RLA by the variable ratio current transformer ratio.

Example: 360 actual rated load amps divided by 400/5 variable ratio current transformer ratio equals 4.5 secondary amps.

3. Use Table 4 to select the proper setting for DIP switches SW1-1 thru 6 and set the switches to the proper settings. Then, operate chiller; check and record the amps for each leg.

Note: In this example, the correct setting for switches SW1-1 thru 6 at 4.5 secondary amps is:

ON|ON|OFF|OFF|ON|ON

4. When there is a significant current unbalance and the VRCT is not on the high leg, you can correct the secondary amps for phase imbalance by multiplying the amps for the current transformer leg divided by the amps of the highest power leg on the chiller.

Example: 4.5 secondary amps multiplied by 250 observed amps of the current transformer leg divided by 260 observed amps for the highest leg equals 4.33 corrected secondary amps.

5. Once you have determined the corrected secondary current value, use Table 4 to reselect the proper setting for current limiting DIP switches SW1-1 thru 6 and set the switches to the appropriate setting.

6. Confirm that the system current limits are at the proper values by operating the chiller at full rated current with the % current pot set at 100%. The current limit (amber) light should come on when full load current is observed at the starter. At this time, the DC voltage signal at terminals V1-V2 should be equal to the value shown next to the corresponding secondary amps value found in Table 4. If limiting does not occur at the level desired, minor adjustments can be made by selecting appropriate switch settings on SW1 (1 thru 6).

Figure 11 - 100% RLA Calibration Worksheet

1. Calculate actual rated load amps (RLA):

[_____] (Nameplate RLA) X [_____] (Nameplate Volts) = [_____] (Actual RLA)
[_____] (Measured Volts)

2. Calculate current transformer secondary amps by dividing the Actual RLA by the Transformer Ratio:

[_____] (Actual RLA) = [_____] (Secondary Amps)
[_____] (Transformer Ratio)

3. Correct the Secondary Amps (if necessary):

[_____] (Secondary Amps) X [_____] (Nameplate Volts) = [_____] (Actual RLA)
[_____] (Measured Volts)

SW1 Switch Settings:

On/Off	1	2	3	4	5	6
On						
Off						

Chiller Voltage and Amps for Each Leg:

Volts/Amps	1	2	3
Volts			
Amps			

Table 4 - % Current Control DIP Switch Settings (SW1)

Secondary Amps	DC Voltage To V1-V2 (See Note)	SW1 Switch Positions 1	2	3	4	5	6	Secondary Amps	DC Voltage To V1-V2 (See Note)	SW1 Switch Positions 1	2	3	4	5	6
5.583	- 9.952	on	on	on	on	on	on	3.418	- 6.092	on	on	on	on	on	on
5.476	- 9.761	on	on	on	on	on	off	3.377	- 6.020	off	on	on	on	on	off
5.372	- 9.576	on	on	on	on	off	on	3.337	- 5.949	off	on	on	on	off	on
5.273	- 9.399	on	on	on	on	off	off	3.299	- 5.881	off	on	on	on	off	off
5.175	- 9.225	on	on	on	off	on	on	3.261	- 5.812	off	on	on	off	on	on
5.083	- 9.061	on	on	on	off	on	off	3.224	- 5.746	off	on	on	off	on	off
4.993	- 8.901	on	on	on	off	off	on	3.188	- 5.682	off	on	on	off	off	on
4.908	- 8.748	on	on	on	off	off	off	3.152	- 5.619	off	on	on	off	off	off
4.022	- 8.596	on	on	off	on	on	on	3.117	- 5.556	off	on	off	on	on	on
4.742	- 8.543	on	on	off	on	on	off	3.083	- 5.496	off	on	off	on	on	off
4.664	- 8.314	on	on	off	on	off	on	3.050	- 5.436	off	on	off	on	off	on
4.589	- 8.180	on	on	off	on	off	off	3.018	- 5.379	off	on	off	on	off	off
4.515	- 8.048	on	on	off	off	on	on	2.986	- 5.322	off	on	off	off	on	on
4.444	- 7.922	on	on	off	off	on	off	2.954	- 5.266	off	on	off	off	on	off
4.376	- 7.800	on	on	off	off	off	on	2.924	- 5.212	off	on	off	off	off	on
4.310	- 7.682	on	on	off	off	off	off	2.894	- 5.159	off	on	off	off	off	off
4.243	- 7.564	on	off	on	on	on	on	2.864	- 5.106	off	off	on	on	on	on
4.182	- 7.454	on	off	on	on	on	off	2.836	- 5.055	off	off	on	on	on	off
4.121	- 7.345	on	off	on	on	off	on	2.808	- 5.005	off	off	on	on	off	on
4.062	- 7.240	on	off	on	on	off	off	2.780	- 4.956	off	off	on	on	off	off
4.004	- 7.137	on	off	on	off	on	on	2.753	- 4.907	off	off	on	off	on	on
3.948	- 7.038	on	off	on	off	on	off	2.726	- 4.860	off	off	on	off	on	off
3.894	- 6.941	on	off	on	off	off	on	2.701	- 4.814	off	off	on	off	off	on
3.842	- 6.848	on	off	on	off	off	off	2.675	- 4.769	off	off	on	off	off	off
3.789	- 6.754	on	off	off	on	on	on	2.650	- 4.723	off	off	off	on	on	on
3.740	- 6.666	on	off	off	on	on	off	2.625	- 4.680	off	off	off	on	on	off
3.691	- 6.579	on	off	off	on	off	on	2.601	- 4.637	off	off	off	on	off	on
3.644	- 6.495	on	off	off	on	off	off	2.578	- 4.595	off	off	off	on	off	off
3.597	- 6.411	on	off	off	off	on	on	2.554	- 4.553	off	off	off	off	on	on
3.522	- 6.331	on	off	off	off	on	off	2.532	- 4.513	off	off	off	off	on	off
3.508	- 6.253	on	off	off	off	off	on	2.509	- 4.473	off	off	off	off	off	on
3.465	- 6.177	on	off	off	off	off	off	2.487	-4.434	off	off	off	off	off	off

Note: DC voltage to V1-V2 (FV1) @ 100% RLA.

Wiring - Control Panel

Figure 12 - "Classic" Black Panel Wiring - Non-bypass

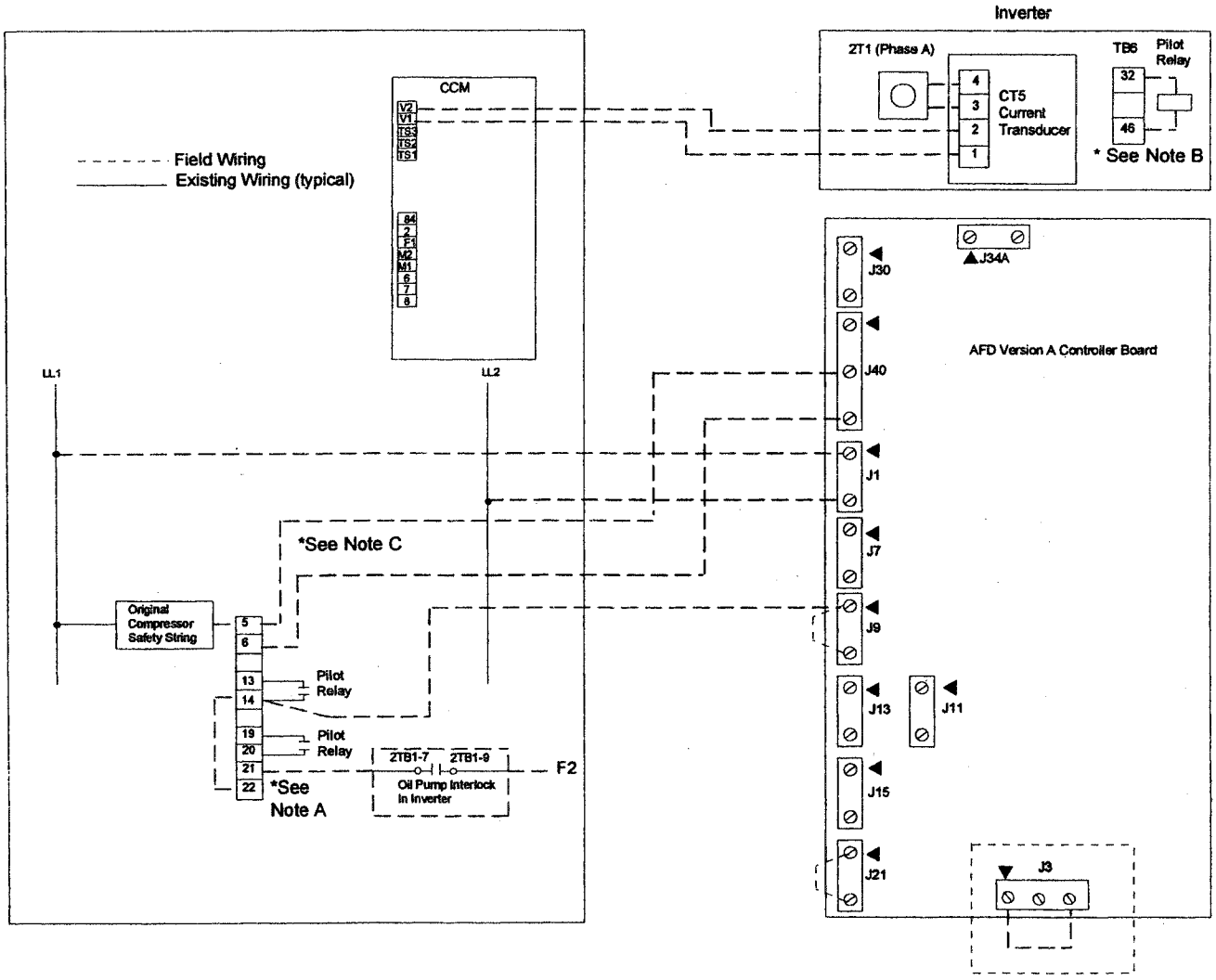

Notes:

A. Remove wire connected to terminal 22 from contactor auxiliary switch in starter and jumper terminal 22 to terminal 14.

B. Wire 120V coil of field provided pilot relay as show. The relay will be required to have two sets of NO contacts to be wired as shown.

C. Terminals 5 and 6 are recommended terminals for insertion of the external inhibit contacts from the drive controller. If these terminals have been used then wire external inhibit in series with safety string elsewhere upstream of condenser water pump.

Figure 13 - "Classic" Black Panel Wiring - Bypass

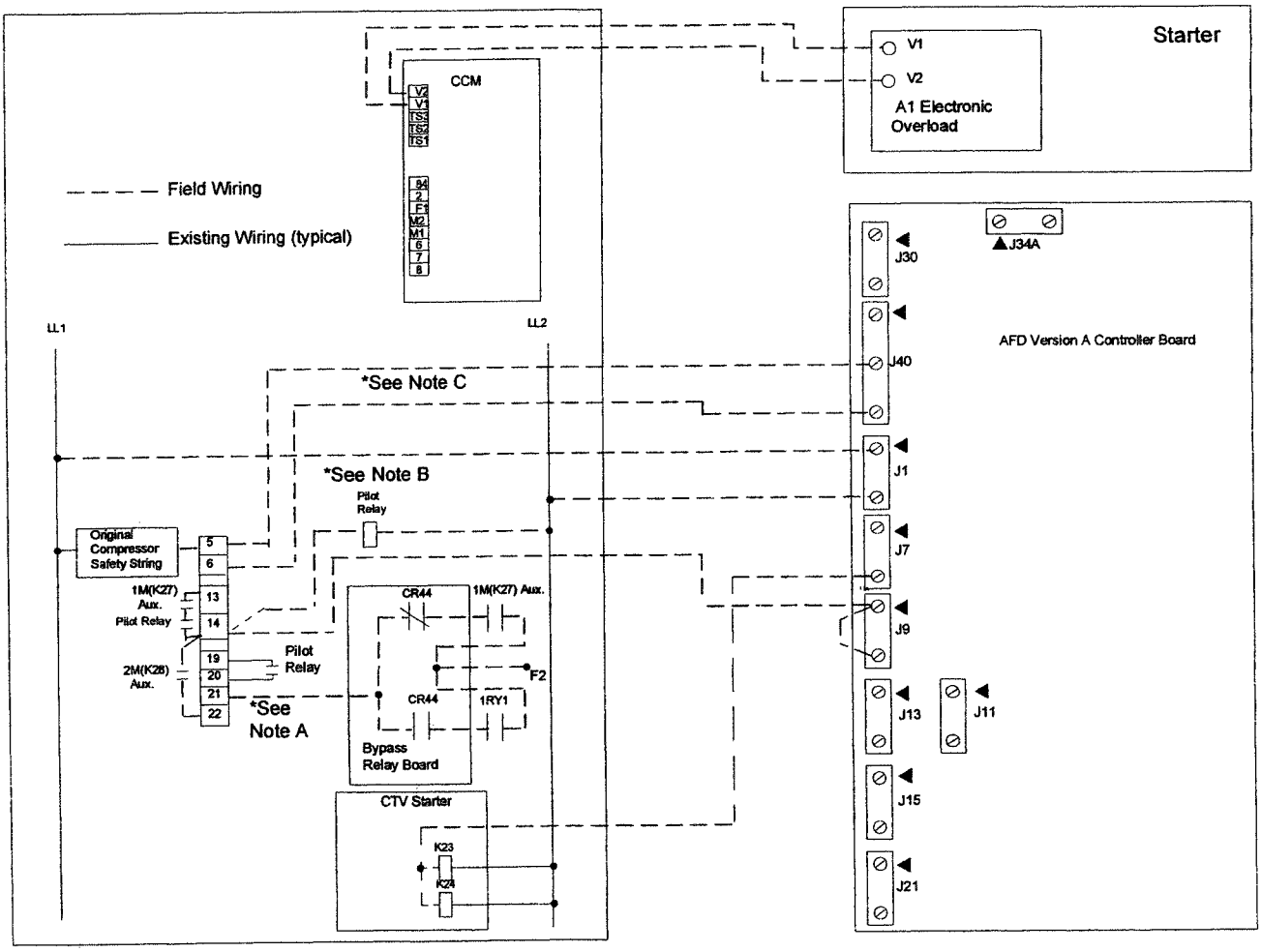

Notes:

A. Remove wire connected to terminal 22 from contactor auxiliary switch in starter. Wire 2M (K28) auxiliary contact between terminals 14 and 22.

B. Wire 120V coil of field provided pilot relay as show. The relay will be required to have two sets of N.O. contacts to be wired as shown.

C. Terminals 5 and 6 are recommended terminals for insertion of the external inhibit contacts from the drive controller. If these terminals have been used then wire external inhibit in series with safety string elsewhere upstream of condenser water pump.

Chiller Controls Wiring

UCP1

Wire as shown in Figure 14.

Installation Notes

A. Start/Run Control - The UCP1 start and run signals are routed through the AFD Version A controller.

B. Current Monitoring Circuit - UCP1 systems use a 3-phase current monitoring input to provide motor protection. In Non-bypass systems, the inverter provides the motor protection so only one phase needs to be monitored for load. The AFD controller supplies the properly phased inputs for Phase B and C. **Note:** Phase A is referenced as the measure leg and this assumes a balanced system. If not balanced, the high current phase should be the leg monitored.

C. Transition - Since an inverter does not transition, the AFD controller simulates a Wye-Delta startup and provides the necessary feedback to the UCP1.

D. AFD External Inhibit - On earlier versions of UCP1, the Proof of Evaporator Flow circuit is used by the AFD controller to inhibit system operation when the controller senses a problem. This applies to CVHE units Design Sequence 1B and earlier and also applies to CVHB units Design sequence 1C and earlier. For these units wire terminals 1TB3-20 and 1TB3-21 in series with the evaporator flow proof string. On later UCP1's, the External Inhibit should be used. Refer to Figure 14 for this wiring scheme.

Figure 14 - UCP1 Wiring

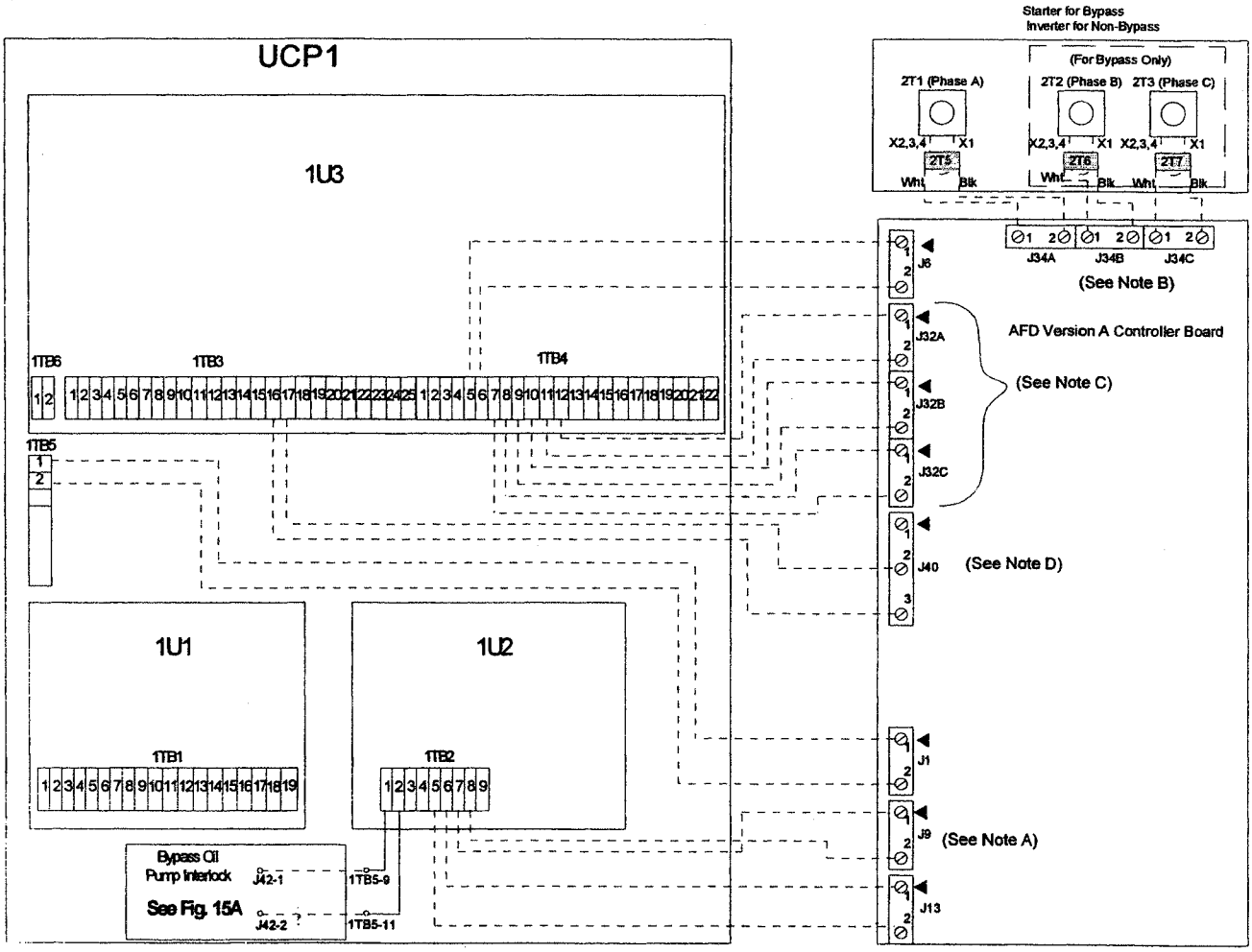

Wiring - Starter (Bypass only)

Starter Rework (Bypass Only)

The Bypass Relay Board must be mounted in the existing starter and connected as shown Figures 15a and 15b below. The board contains circuitry for the oil pump interlock and contactor control.
Note: This replaces the existing oil pump interlock.

Figure 15a - Starter Rework

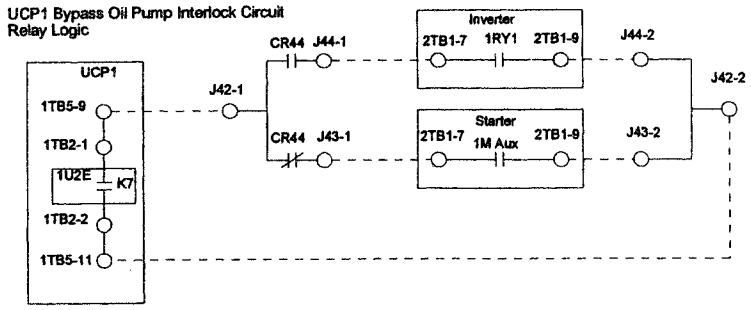

Figure 15b - Starter Rework

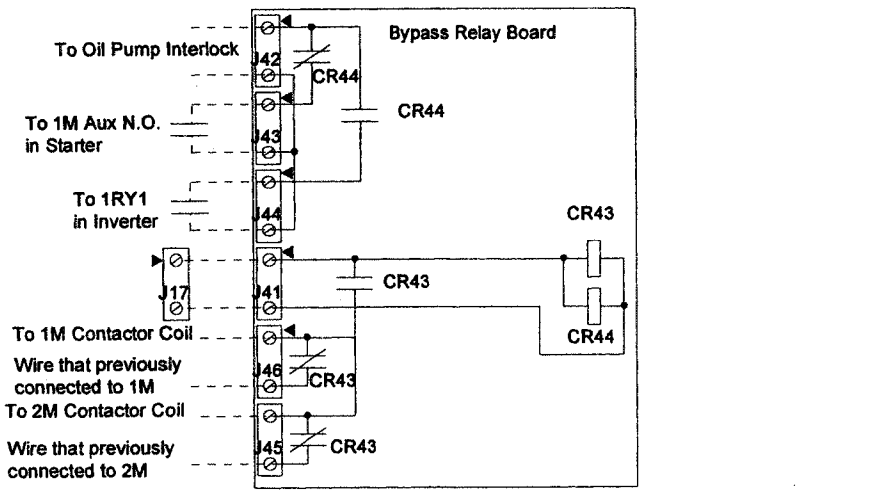

Note: Customer wiring to terminals **J41, J45, J46** is polarity sensitive. Wire exactly as shown for proper operation.

Startup

Adaptive Frequency Drive (AFD) Mode

1. For Bypass Systems ONLY, configure incoming power leads for bypass systems by placing the transfer switch in the AFD position which -

- energizes 1M and 2M contactors.
- energizes CR2 relay on controller board through interlocks (S1 and S2) on the transfer switch.

For Non-bypass systems, CR2 is jumpered to be on continuously.

Note: The interlock switches S1 and S2 are activated by engaging the transfer switch lever in either the AFD or bypass mode. These switches are late make/early break and must open up prior to the transfer switch main poles opening. Test by moving transfer switch lever slowly out of AFD and by-pass mode and listen for the click of the interlock switch opening. This should occur prior to the main poles opening. If the timing is not correct, consult factory for switch adjustment before to start up.

Note: The start string is wired through a set of N.O. contacts of the CR8 relay in the AFD controller panel at J40. The CR8 relay will be energized allowing the start string to pass as long as no faults are detected in the AFD mode.

CPR/Classic Black Systems:

Refer to Figures 9 and 25 for CPR systems or to Figures 12 and 23 for Classic Black systems.

2. When the chiller detects a load, the start/run signal from the chiller controls -

- (CPR systems only) Control power is sent to terminal 7 in the existing pneumatic panel from - a jumper from terminal 2 for non-bypass systems or through the 1M and 2M aux. contacts for bypass systems.
- Energizes CR3, the inverter run relay.
- Energizes CR4 which supplies a dry contact to the PCM indicating that the chiller has been requested to run.
- (Classic Black Only) The AFD energizes a field supplied pilot relay which locks in the start signal and it provides the run signal to the CCM.
- The AFD closes the oil pump interlock relay 1RY1.
- The AFD ramps to [HZ_START]
- The AFD controller modulates frequency according to the Speed Adjustment Criteria detailed in the Introduction section.

UCP1 Systems:

Refer to Figures 14 and 21.

2. When the chiller detects a load, the start signal from the chiller controls -

- Energizes CR3, the inverter run relay.
- Drives the CT filter to output a 7.0 VAC signal on the CT outputs (J32) to the UCP1 inputs.
- Oil pump interlock is provided by UCP1 contacts for non-bypass installations. For bypass installations oil pump interlock is provided by 1M aux. contact for bypass mode or from 1RY1 in inverter for AFD mode.

3. The run signal from the chiller controls -

- Locks in CR3 (for Bypass, through the 1M and 2M auxiliary's).
- Energizes CR4 which supplies a dry contact to the PCM indicating that the chiller has been requested to run.
- The AFD ramps to [HZ_START]

- The AFD closes the contacts on the At Speed relay in the drive.
- Energizes CR7 which latches through its dry contacts.
- Configures the CT outputs to a 60 Hz. line proportional signal.
- The UCP1 senses the drop in current and closes the initiate transition circuit.

4. The initiate transition signal from the UCP1 -

- Energizes CR5.
- Activates CR6 through a set of CR5 NO contacts and latches CR6 through one set of CR6 NO contacts.
- Signals transition complete back to the UCP1 through the other set of CR6 NO contacts.
- The AFD controller modulates frequency according to the Speed Adjustment Criteria detailed in the Introduction section.

Starter Bypass Mode (Optional)

Note: The start string is passed through the J40 (External Inhibit) contacts of the AFD controller so the controller must be powered and running to provide the start string for bypass mode also.

1. Bypass switch set to starter mode.

- CR2 is not activated, suppressing AFD diagnostics.
- CR1 is energized.

CPR Systems:

Refer to Figures 10 and 26.

- The start/run relay (2K5) in the starter is energized, which initiates a standard Wye-Delta startup.
- The oil pump interlock is provided through the 1M Aux. and the bypass board contacts.

Classic Black Systems:

Refer to Figures 13 and 24.

- The start/run signal energizes a field supplied pilot relay which locks in the start signal and it provides the run signal to the CCM.
- The start/run relays (K23 and K24) in the starter are energized, which initiates a standard Wye-Delta startup.
- The oil pump interlock is provided through the 1M Aux. and the bypass relay board contacts.

UCP1 Systems:

Refer to Figures 14 and 22.

- The start/run relay 2K5 in the starter is energized, which initiates a standard Wye-Delta startup.
- A high in-rush current followed by a drop in current signals the controls to initiate transition. This energizes CR5 which activates the transition relay (K5).
- When the 1M and 2M auxiliary's N.O. contacts close, CR6 is energized and latched, signaling transition complete.

Shutdown

Adaptive Frequency Drive (AFD) Mode

Shutdown can be initiated in one of three places:

- the AFD
- the chiller controls
- the AFD controller

If the protection circuits in the AFD initiate a shutdown, the chiller controls will sense a Momentary Power Loss and the inverter fault will cause the AFD controller to lock out the unit controls until the inverter fault is reset. For a non-latching fault, the reset is accomplished when the chiller controls remove the run contact.

When the chiller controls stop the unit, the run signal is removed from the AFD, shutting it down also.

The AFD controller shuts down the chiller controls through the external inhibit, resulting in unit shutdown.

Check the AFD historical diagnostics in the inverter to find the cause of failure.

Figure 16 -
AFD Control Display

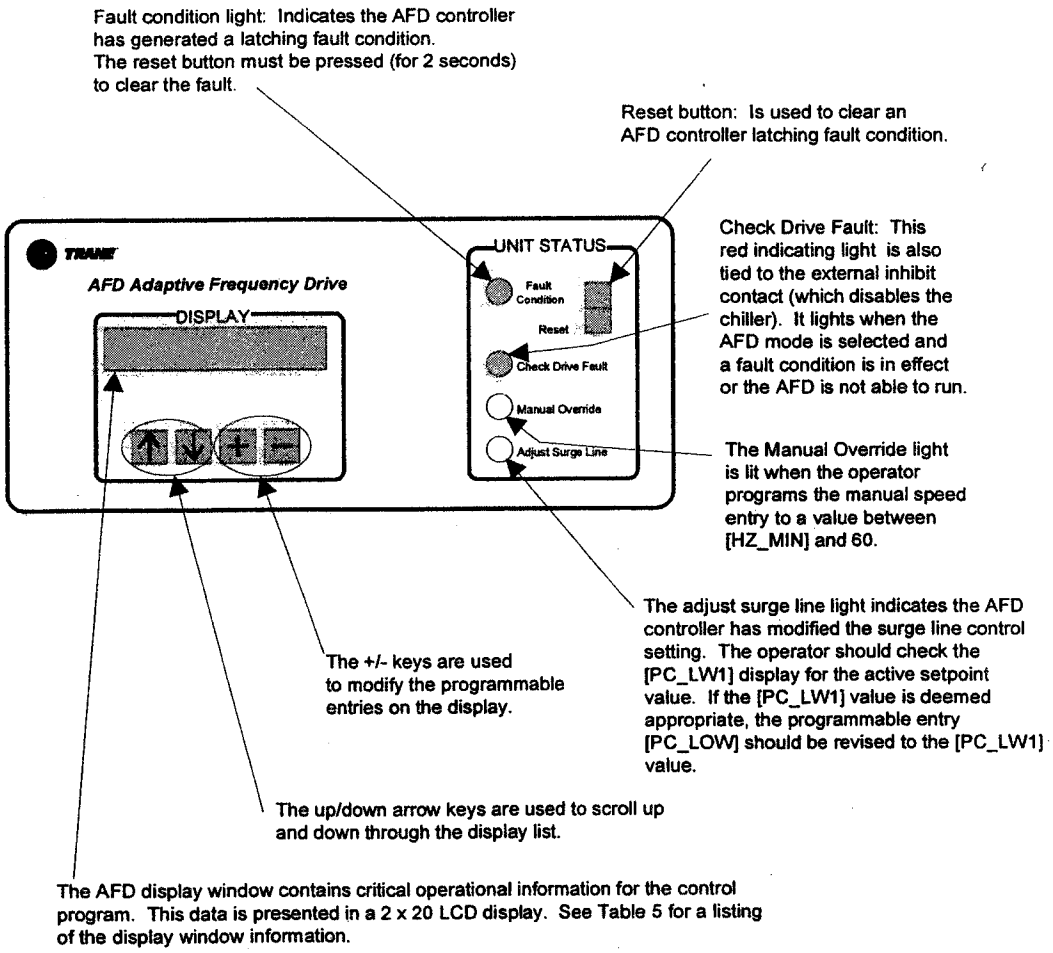

1. Programmable Control Module (PCM) Programmable Variables:

The AFD controller displays information on a 2 x 20 liquid crystal display (LCD) as shown in Figure 16. The operator can scroll through the entries by using the arrow keys underneath the display window. The programmable windows shown in Table 5 contain information that can be modified by the user. The "+" and "-" keys are used to make changes and lock in the data.

Table 5 -
AFD Controller Display

AFD DISPLAY	Description/Ranges
01-JAN-95 16:30	**Programmable:** Calendar and Clock for AFD controller (display use only). Use '-' key to select item. The '+' key will change the entry.
AFD_A101: COMM DOWN LOCAL o-	Status Display - indicating the rev level of the AFD software 'AFD_A101', the Tracer communication status 'COMM DOWN', 'LOCAL' control.
AFD FAULT CODE FAULTCOD: .0	AFD Fault code status - '.0' = OK, '1.0' = Drive not ready, '10.0' =Latching fault - drive is running, but no compressor run signal, '11.0' = Latching fault - unit in a prolonged surge condition, '12.0' = Latching fault - drive not running, but compressor run signal is present.
HERTZ - AFD TO CTV AFD_HZ : 45.2	Active control speed to the AFD. Range 42 to 60. Usually derived from the AFD controller but may be overridden by the manual hertz entry.
IGV POSITION IGV_POS : 65.3 PCT	Inlet Guide Vane Position. Range 0 to 100%. This display reflects the position of the guide vanes as determined by the IGV position sensor.
EVAP PRESSURE PSIA EVAPPRES: 7.3	Chiller Evaporator Refrigerant Pressure (PSI absolute). May vary from 0 to 30 PSIA. This data is determined from the evaporator transducer.
COND PRESSURE PSIA CONDPRES: 17.1	Chiller Condenser Refrigerant Pressure (PSI absolute). May vary from 0 to 30 PSIA. This data is determined from the condenser transducer.
ADJUST SURGE LINE AUTO_ADJ: YES	**Programmable:** This parameter is used to determine if the active surge control line may be modified by the program. (Suggested entry is 'YES'.)
IGV MIN DBND SETUP IGV_MIN : 60.0	**Programmable:** This entry sets up the lower bound of the dead band region for guide vanes. (Range 40 to 90. Default is '60.0'.)
IGV MAX DBND SETUP IGV_MAX : 90.0	**Programmable:** This entry sets up the upper bound of the dead band region for guide vanes. (Range 60 to 95. Default is '90.0'.)
HERTZ - START VAL HZ_START: 50.0	**Programmable:** This entry determines the start up speed for the chiller unless overridden by manual hertz. (Range 45 to 60. Default is '50.0'.)
MANUAL HRTZ ADJUST HZ_MANUL: .0	**Programmable:** This entry instructs the AFD to run at a given speed. (Range 0 to 60. Will take active control when value is between [HZ_MIN] and 60.)
MINIMUM HERTZ VAL HZ_MIN : 42.0	**Programmable:** This entry selects the lowest available speed for the chiller. (Range 42 to 55. Default is '42.0'.)
PRESSCOEF- LOW VAL PC_LOW : 92.0	**Programmable:** This entry selects the low value for the surge line as indicated in the overview section. (Range 20 to 140. Value changes for each chiller.)
PRESSCOEF- SLOPE PC_SLOPE: 13.0	**Programmable:** This entry determines the slope of the surge line as indicated in the overview section. (Range 0 to 30. Value may change per chiller. Try '15'.)
PRESSCOEF- DEADBAND PC_DBND : 3.0	**Programmable:** This entry selects the dead band region under the surge line. (Range 3 to 10. If cond water temp is stable, '3' is OK, otherwise increase number.)
PRESS COEFFICIENT PRESCOEF: 85.6	This is the calculated pressure coefficient for the chiller. The value of the pressure coefficient is compared to the surge line to determine proper speed.
LINEARIZED IGV POS IGV_LINR: 94.4	The linearized guide vane value is used with the surge line to determine the chillers proximity to surge.
SURGE COUNTER SRG_CNT : .0	This is an incremental surge counter used to determine if corrective action should be taken. Speed increases only occur if repeated surge events occur.
TOTAL SURGE COUNT TTL_SRGS: 22.0	This is a total surge counter that may be used by the operator to determine how much surging is taking place. (Range 0 to 3000. Recycles to 0 after 3000.)
LOW SIDE SURGE LIM PC_LW1 : 92.0	Active control point for the low value of the surge line. If AUTO_ADJ is 'YES', it may differ from [PC_LOW]. If different, the 'ADAPTED' light will be ON.

2. IGV Position Sensor:

After installing the IGV Position Sensor bracket and wiring between the IGV Position Sensor and Signal Conditioning Module as shown in Figure 3, the following setup procedure will allow the AFD controller to monitor Inlet Guide Vane Position.

Set jumpers S1, S2, S3 and S4 as shown in Figure 17.

Power up the Signal Conditioning Module by closing the Control Power Disconnect and allow the Signal Conditioning Module to warm up for 15 minutes before proceeding.

Connect a DC Voltmeter to Pins 9 (- or black lead) and 10.

Close the actuator.

Position the red end of the core flush with the red marked (opposite the wires) end of the IGV Position Sensor.

Tighten the nuts to fix the core extension rod to the actuator arm.

Adjust the Zero pot. until the output (pins 9 and 10) is 1 VDC.

Stroke the actuator out to the full open position and check that the core moves freely within the sensor.

Check the output voltage and adjust the Gain pot. to halfway between 9 VDC and the observed output voltage.

Close the actuator and adjust the Zero pot. to 1 VDC.

Alternate between fully open and fully closed positions until the 1 to 9 VDC range is achieved.

Check the AFD Controller screen to verify that [IGV_POS] reads 0 to 100% ± 2% at the endpoints.

Figure 17 - Signal Conditioning Module Jumper Configuration

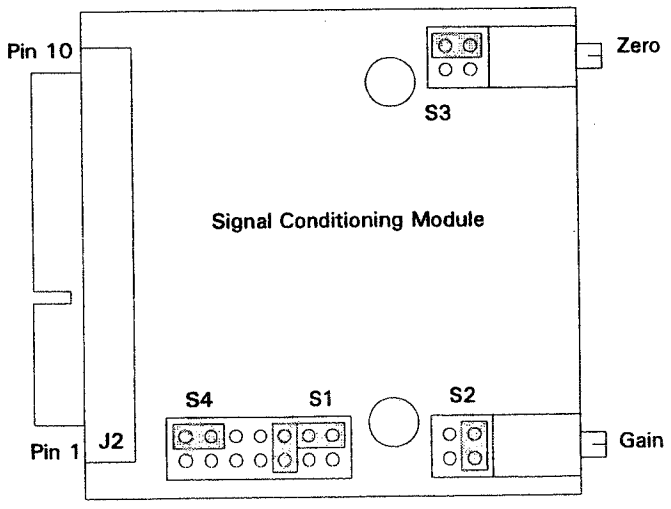

Table 6 - User Selectable Functions

Parameter No.	Parameter Name	Trane Setting	Field Access	Range Of Data
01	Month/Day/Year	01/01/1991	Y	12/31/2068
02	HH:MM:SS	23:59:59	Y	23:59:59
03	Min Freq Limit	42 Hz.	Y	2-120 Hz
04	Max Freq Limit	60 Hz.	Y	2-120 Hz
05	Accel Time	6 Hz./Sec.	Y	0.1-3000 Seconds
06	Decel Time	6 Hz./Sec.	Y	0.1-3000 Seconds
07	Ramp Pattern	Linear	N	Linear,S-Curve
08	Remote Freq Src	Analog 1	Y	Analog 1, POT, Serial Air Pressure, PID
09	Analog Min Freq	42 Hz	N	2-120 Hz
10	Analog Max Freq	60 Hz.	N	2-120 Hz
11	Analog Min In	20%	N	0-100%
12	Analog Max In	100%	N	0-100 %
13	Motor OL Relay	Normal	Y	OFF-Normal-Extended
14	Motor FL Amps	105% of Motor RLA*	Y	25%-Drive Rating
15	Auto Reset Trys	1	Y	0-100
16	Auto Reset Wait	10 Sec.	Y	0.1-600 Seconds
17	Stop Type	Powered	N	Powered,Coast
18	Torque Limit	105% of Motor RLA*	N	50-110% (150%)
19	Motor Poles	2	N	2,4,6,8,10
20	Carrier Freq	1000	N	700-1300 Hz
21	Jog Speed	NA	N	2-120 Hz
22	Thread Speed	NA	N	2-15 Hz
23	Preset Speed 1	NA	N	2-120 Hz
24	Preset Speed 2	NA	N	2-120 Hz
25	Preset Speed 3	NA	N	2-120 Hz
26	Preset Speed 4	NA	N	2-120 Hz
27	Preset Speed 5	NA	N	2-120 Hz
28	Preset Speed 6	NA	N	2-120 Hz
29	Preset Speed 7	NA	N	2-120 Hz
30	Jump Speed 1	NA	N	2-120 Hz
31	Jump Band 1	NA	N	0-5 Hz
32	Jump Speed 2	NA	N	2-120 Hz
33	Jump Band 2	NA	N	0-5 Hz
34	Jump Band 3	NA	N	2-120 Hz
35	Jump Band 3	NA	N	0-5 Hz
36	Volts/Hertz	7.67	N	3.84-11.5
37	Analog Output 1	DC Kilowatts	N	Frequency, Amperes, Volts, DC Kilowatts
38	Analog Output 2	User Defined	N	Frequency, Amperes, Volts, DC Kilowatts
39	Analog Output 3	User Defined (Optional)	N	Frequency, Amperes, Volts, DC Kilowatts
40	Analog Output 4	User Defined (Optional)	N	Frequency, Amperes, Volts, DC Kilowatts
41	Slip Compens	0	N	0-7.5%
42	Password 1	00000000	Y	11111111
43	Password 2	00000000	N	11111111
44	Password 3	00000000	N	11111111
45	Kbd Password	00000000	N	11111111
46	Relay 1 Function	RUN	N	RDY (Ready)
47	Relay 2 Function	RDY (Ready)	N	RDY (Ready)
48	Relay 3 Function	UTS (Up To Speed)	N	UTS (Up To Speed)

3. Parameter Adjustment:

Parameters allow the customer to configure the Accutrol 700 to the job specific application. Many parameters can be adjusted while the drive is operating. Parameters are adjusted by pressing the ENTER key when in the PROGRAM function and the Parameter menu item is selected. This function is exited by pressing the MONITOR key to return to the monitor function or the PROGRAM key to return to the PROGRAM function main menu. Over 70 parameters, depending upon the selected options, can be accessed and modified. Table 6 contains a list of the available parameters.

Parameters which do not require adjustment have been password level 3 protected. The password for level 1 is "010101" and is required to access field adjustable parameters.

The individual parameters are accessed by scrolling up and down the wrap-around list with the up ⇑ and down ⇓ keys. Two types of parameters can be modified, numeric types and menu types.

Refer to the drive's Installation, Operation and Maintenance manual for a detailed explanation of these parameters. *See unit nameplate for compressor motor RLA. This is calibrated as a percentage for the drive nameplate rating and must be calculated for 105% of the compressor motor.

4. **Surge Line Setup Procedure:**

The AFD controller requires a chiller surge prediction to properly adjust chiller speed (see Figure 18a). This prediction curve is entered as a surge line defined by two input parameters [PC_LOW] and [PC_SLOPE]. These parameters are determined at startup by a qualified Service Engineer according to the following procedure.

A. To locate approximately three to four surge points on the accompanying graph (Figure 18):

- run the chilled water temperature near a typical operating point
- fix the AFD speed between 50 and 55 hertz by selecting a speed via the [MANUL_HZ] entry
- fix the IGV's to obtain a given point on the chart (suggest 15, 30, and 90%).
- raise the condensing temperature to cause a surge condition (choke off the condenser water flow or raise the tower temperature).
- Observe the [IGV_LINR] and [PRESCOEF] values from the AFD display window. Make note of the [PRESCOEF] just prior to the chiller surging. For a given IGV position, the [IGV_LINR] value will remain constant.
- The data points of [IGV_LINR] vs. [PRESCOEF] are plotted on a chart as shown on the Figure 19.

B. Determine a predicted Surge Line

- A surge line is drawn below the surge points as detailed on the chart. From the surge line, record the [PRESCOEF] value at an [IGV_LINR] value of 0 and 100. For the example detailed on Figure 18 these points would be:

[IGV_LINR]	[PRESCOEF]
0	92
100	105

Trane recommends setting the surge line 5-10% below the measured points to insure the chiller won't surge.

C. Program the Predictive Surge Line into the AFD controller

- [PC_LOW] = 92
- [PC_SLOPE] = 13 (105-92 = 13).

Figure 18 - PC Slope

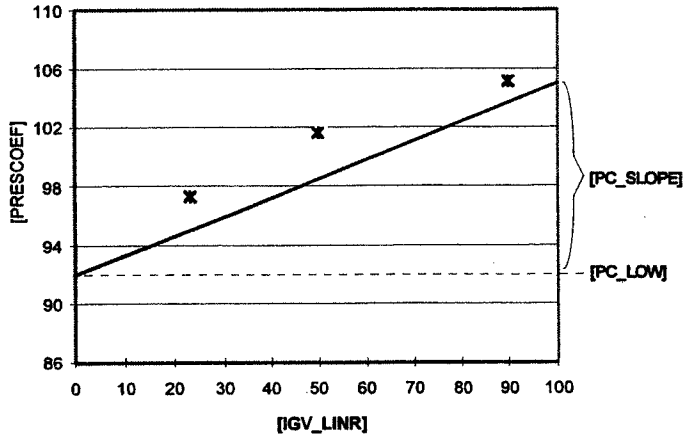

Figure 18 a - Speed Adjustment Criteria

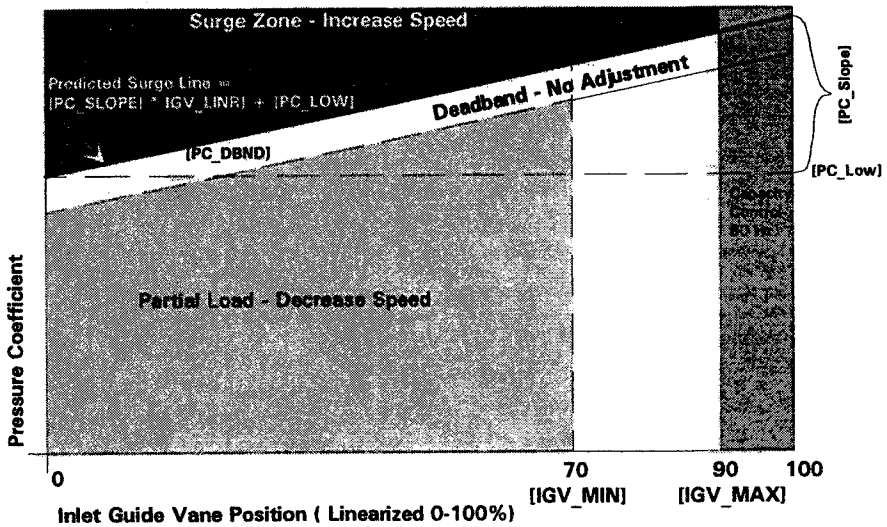

5. Circuit Board Jumper Configurations

Jumpers should be as shown on Figures 19 and 20 for the PCM and Controller Board.

Figure 19 - Programmable Control Module (PCM)

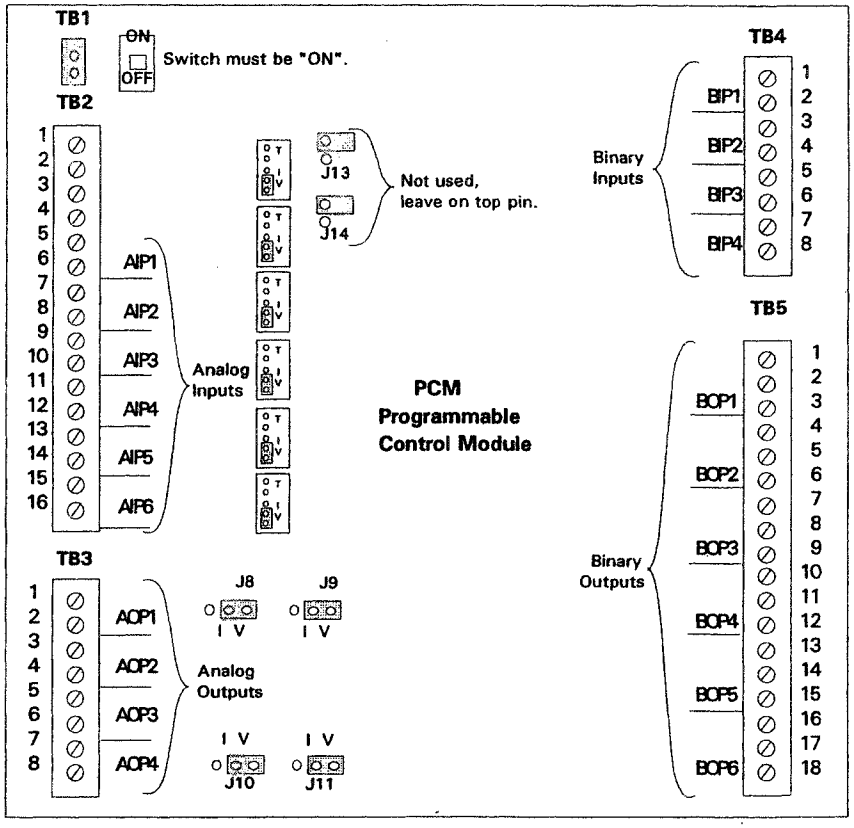

Figure 20 - AFD Version A Controller Board

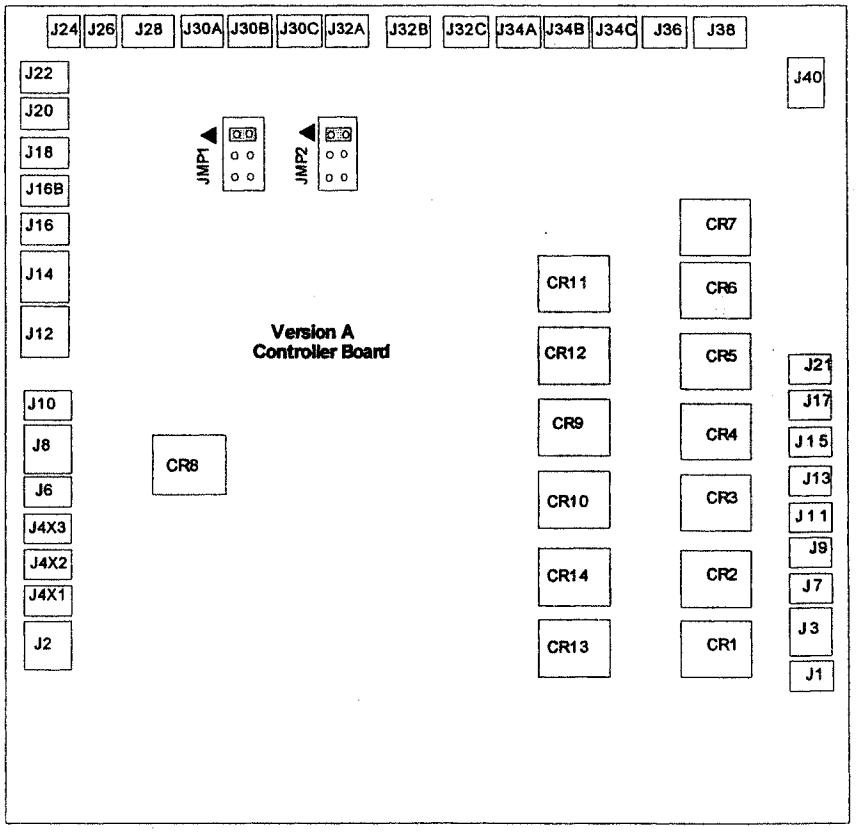

Maintenance

Periodic Maintenance

A. IGV Position Sensor - Stroke Inlet Guide Vanes fully open and verify that the Human Interface reads 100 ± 2% for [IGV_POS] and 0 ± 2% with the vanes fully closed.

B. Filters in the Drive - Replace at least once a year. See Accutrol Instruction Manual for location.

C. Check Drive Historical Diagnostics - Found in the Fault History as described under the Inverter parameter section.

Wiring Diagrams

Figures 21 through 26 show UCP1, Classic Black and CPR system wiring diagrams with and without starter bypass option.

1M 1M Starter Contactor
S1 S2 Transfer Switch
CR1 Starter Mode Relay
CR2 Inverter mode Relay
CR3 Inverter Run Relay
CR4 Chiller Run Relay
CR5 Transition Relay
CR6 Transition Complete
CR7 Inverter Up To Speed
CR8 External inhibit
BPR Bypass Relays (CR9-14)
ITR Inverter Transition

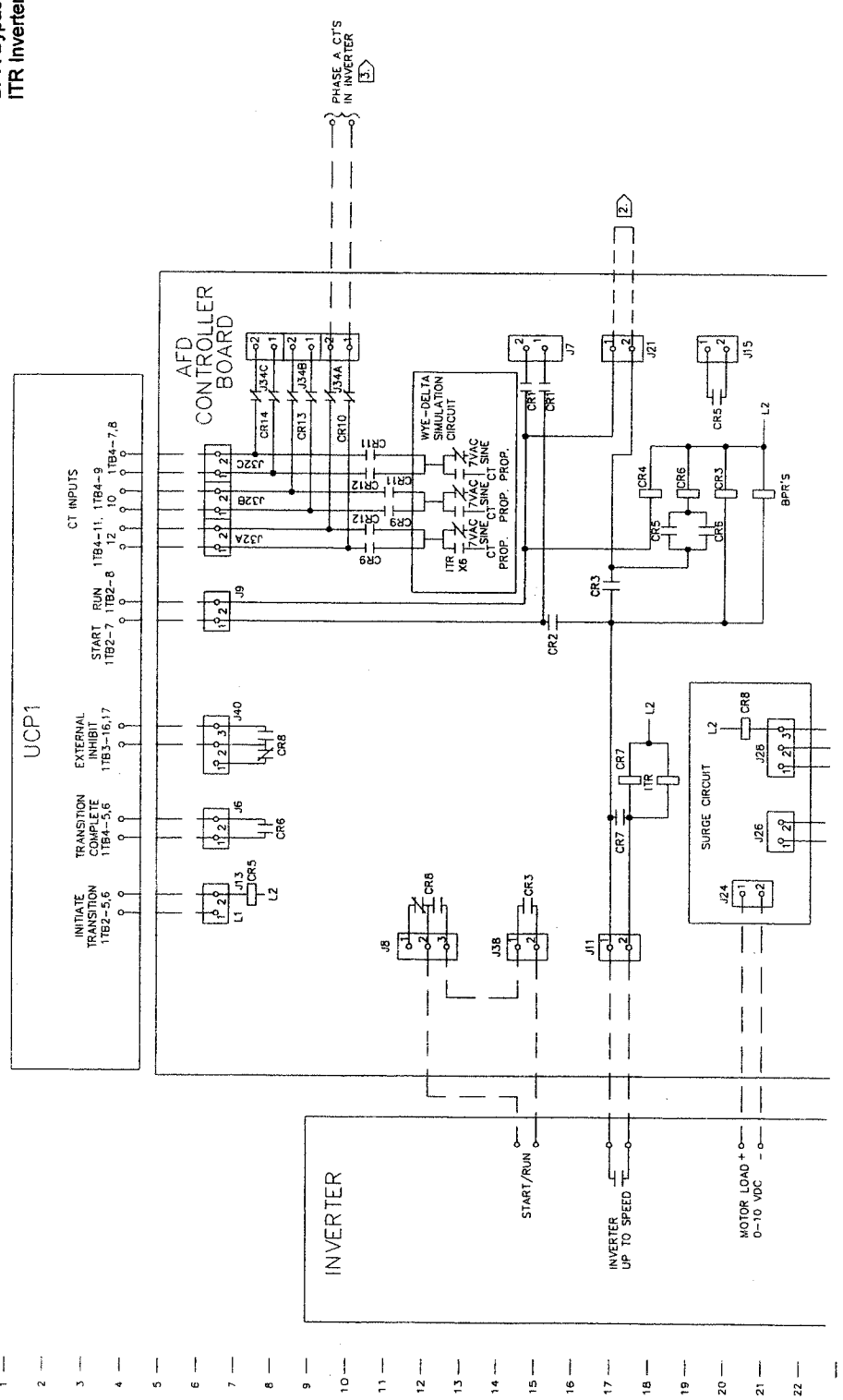

Figure 21 - UCP1 Non-Bypass

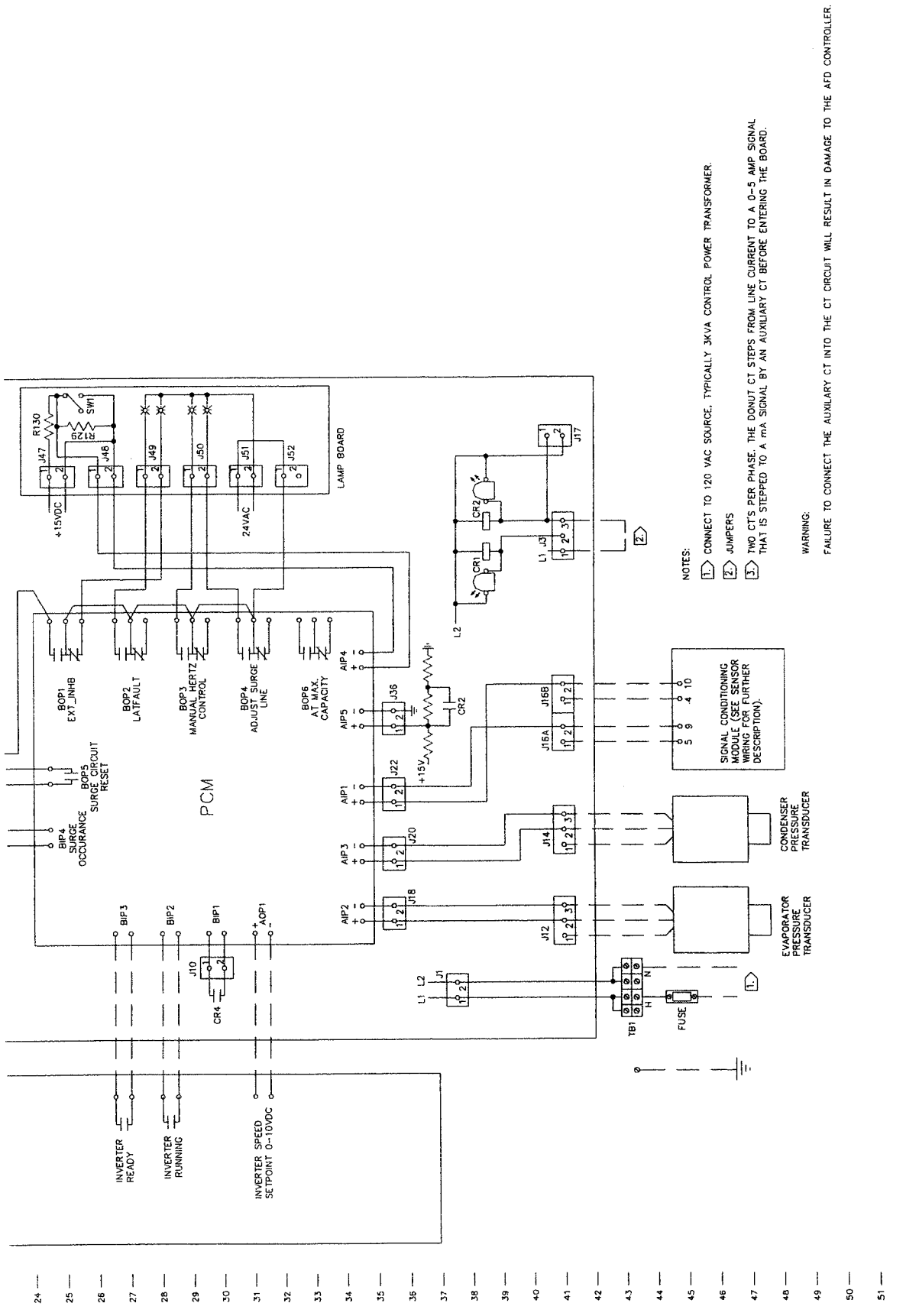

Figure 21 - UCP1 Non-Bypass

1M 1M Starter Contactor
S1 S2 Transfer Switch
CR1 Starter Mode Relay
CR2 Inverter mode Relay
CR3 Inverter Run Relay
CR4 Chiller Run Relay
CR5 Transition Relay
CR6 Transition Complete
CR7 Inverter Up To Speed
CR8 External inhibit
BPR Bypass Relays (CR9-14)
ITR Inverter Transition

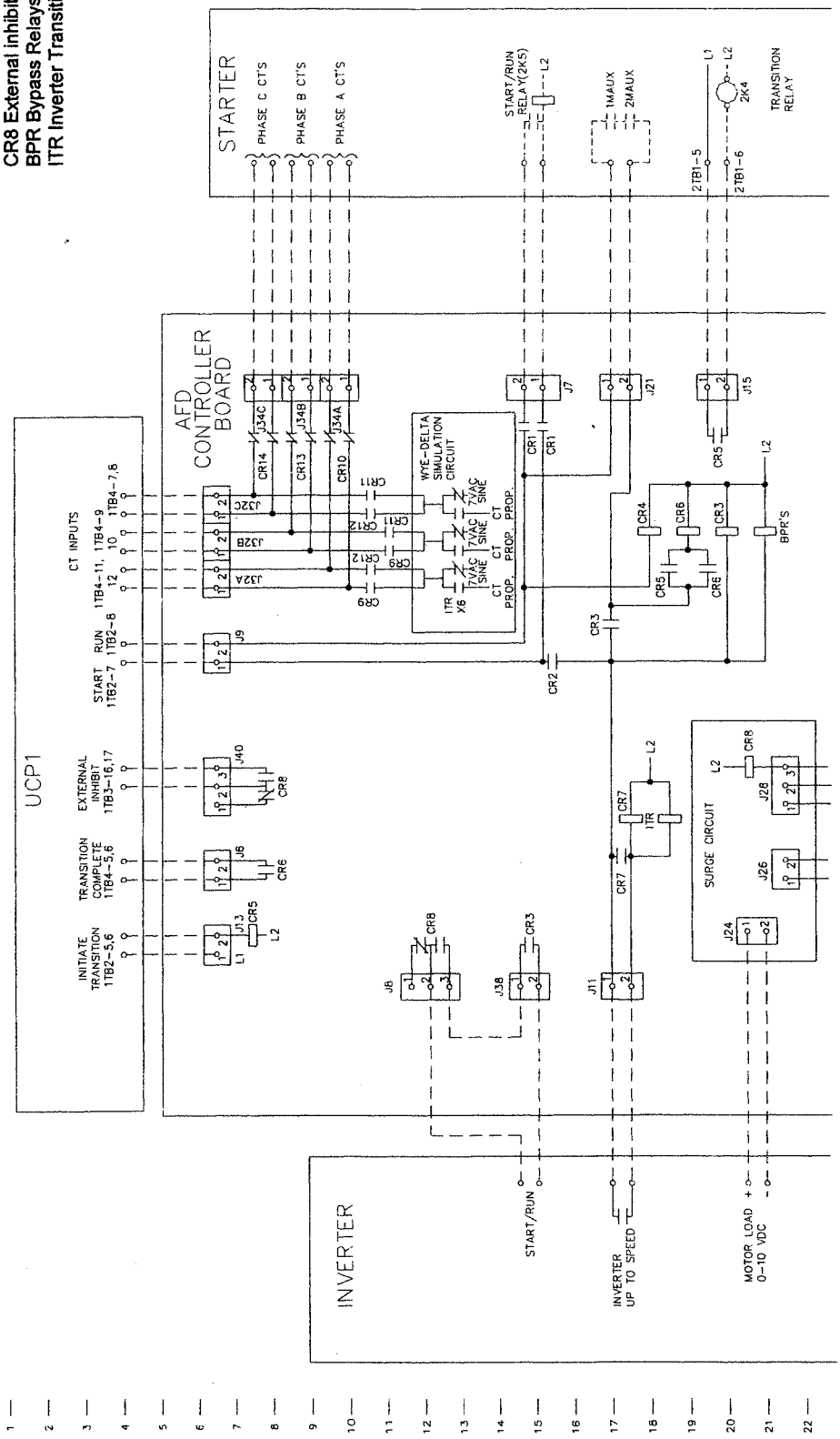

Figure 22 - UCP1 Bypass

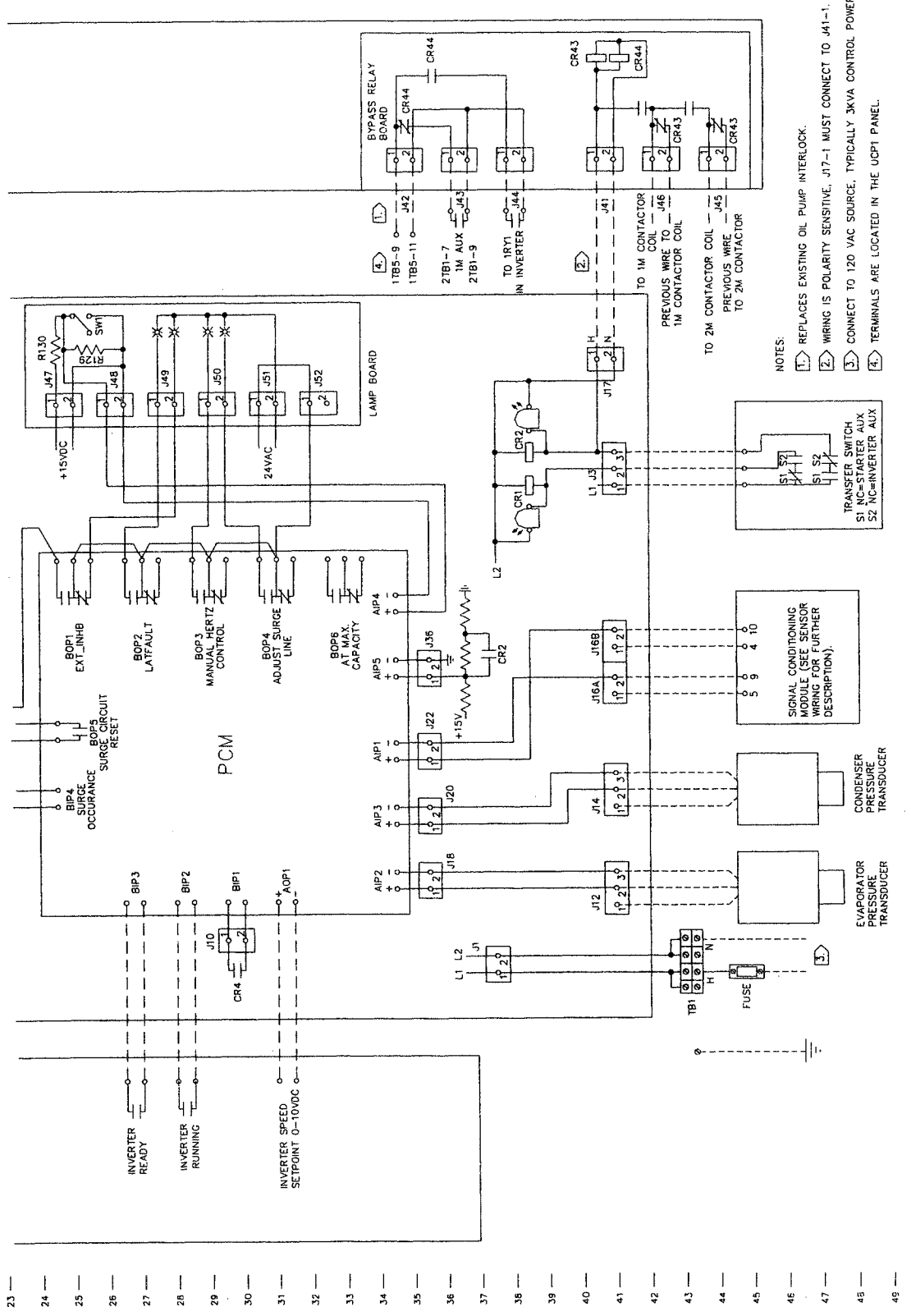

Figure 22 - UCP1 Bypass

1M 1M Starter Contactor
S1 S2 Transfer Switch
CR1 Starter Mode Relay
CR2 Inverter mode Relay
CR3 Inverter Run Relay
CR4 Chiller Run Relay
CR5 Transition Relay
CR6 Transition Complete
CR7 Inverter Up To Speed
CR8 External inhibit
BPR Bypass Relays (CR9-14)
ITR Inverter Transition

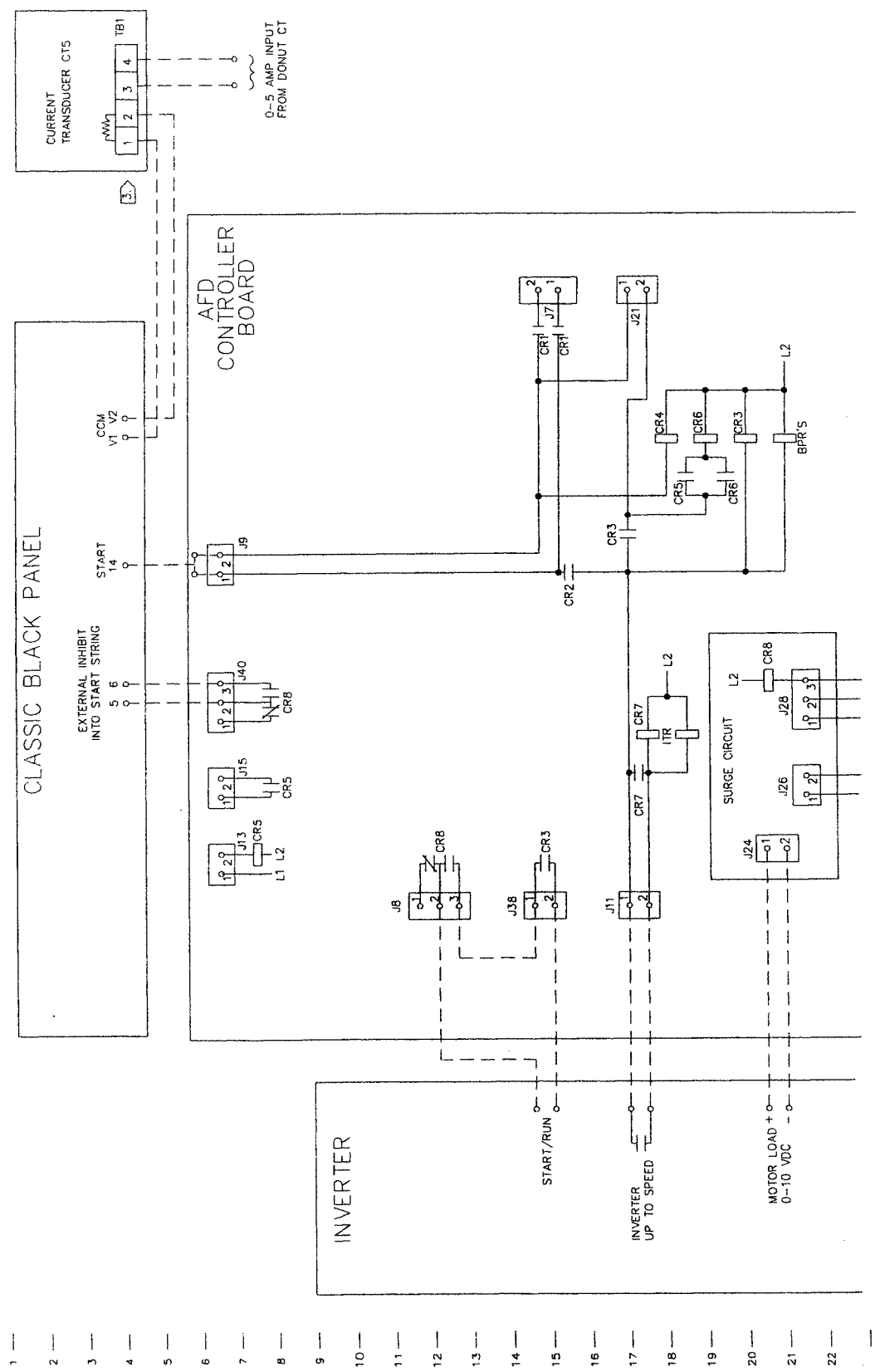

Figure 23 - Classic Black Panel Non-Bypass

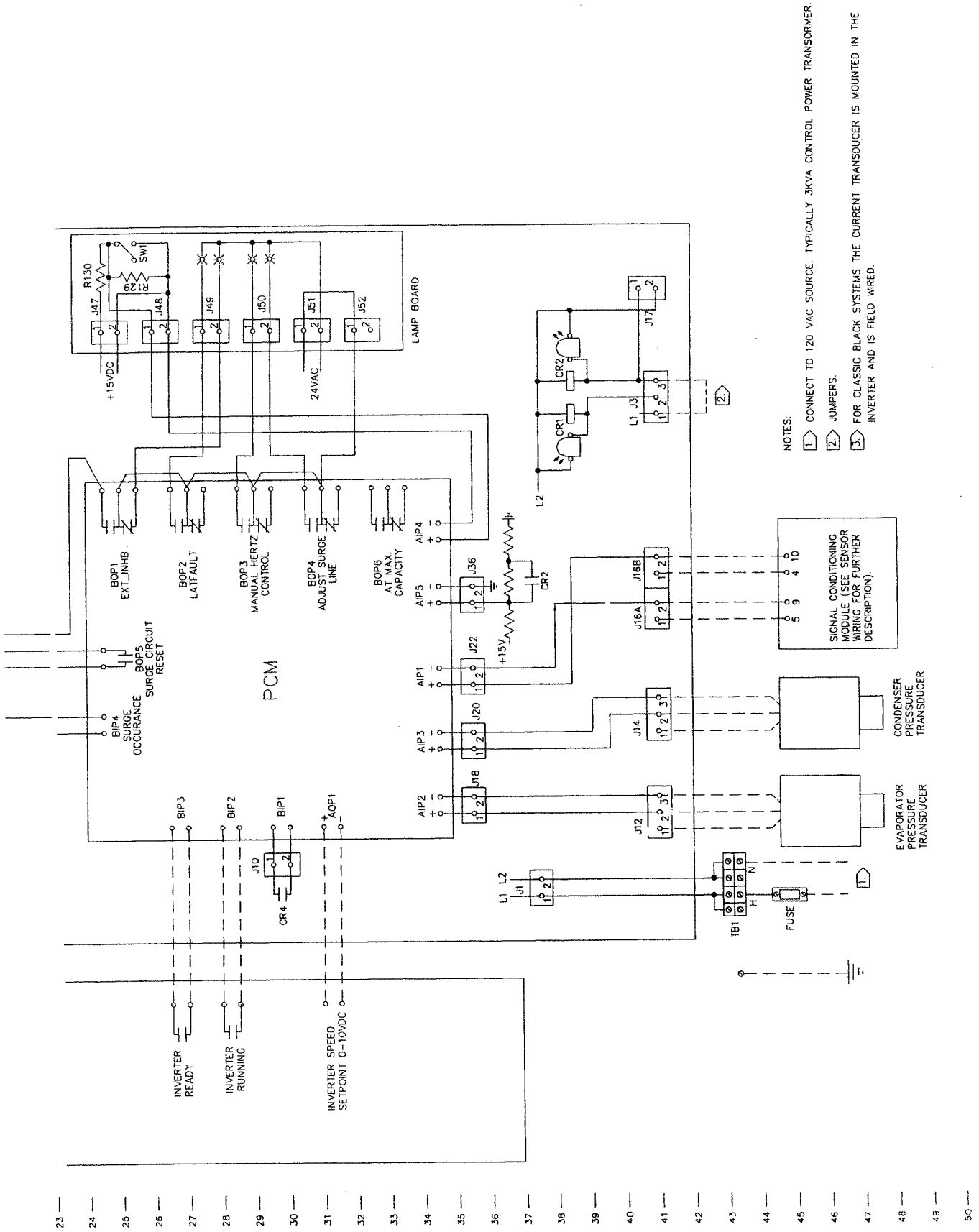

Figure 23 - Classic Black Panel Non-Bypass

1M 1M Starter Contactor
S1 S2 Transfer Switch
CR1 Starter Mode Relay
CR2 Inverter mode Relay
CR3 Inverter Run Relay
CR4 Chiller Run Relay
CR5 Transition Relay
CR6 Transition Complete
CR7 Inverter Up To Speed
CR8 External inhibit
BPR Bypass Relays (CR9-14)
ITR Inverter Transition

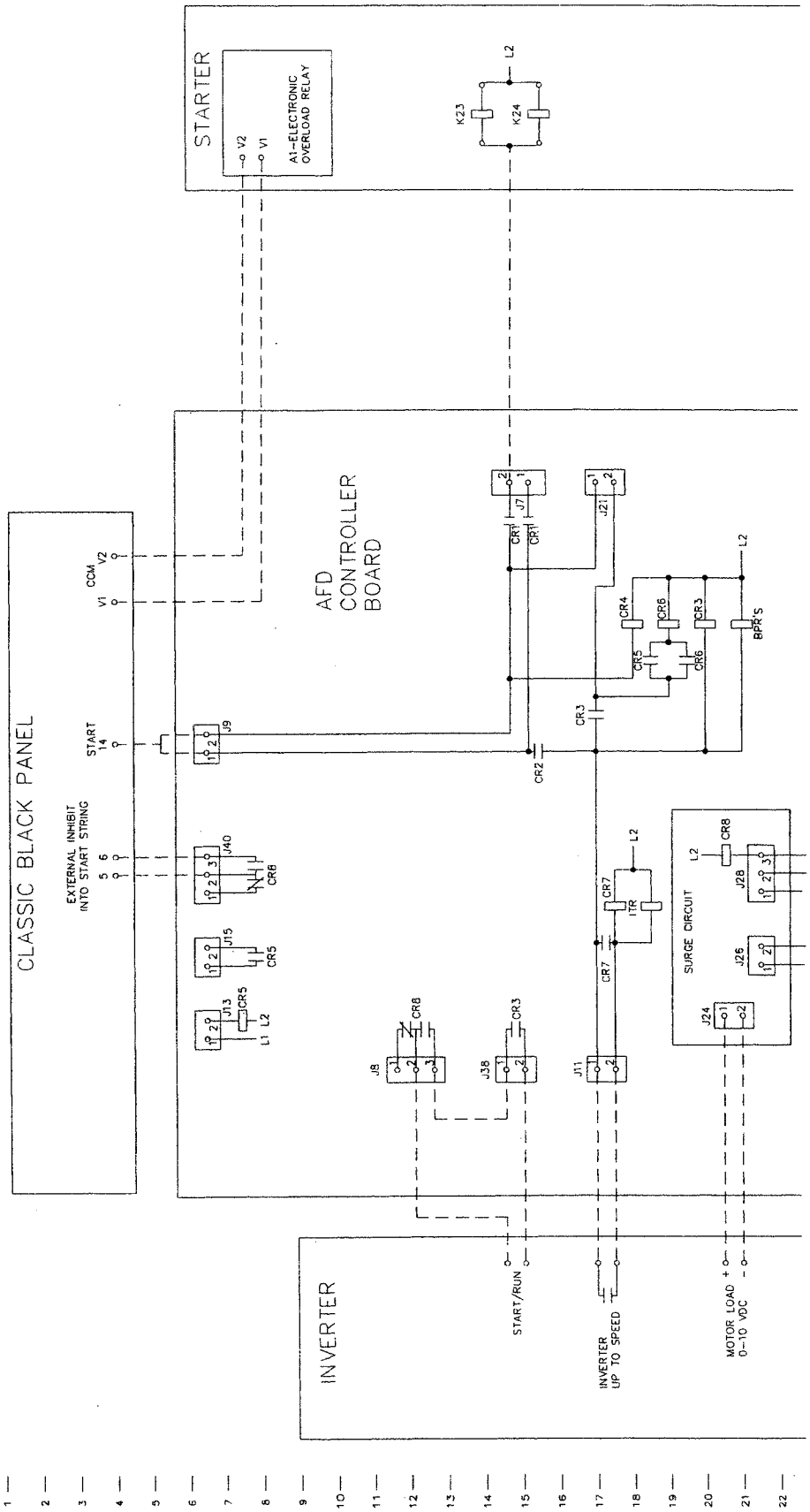

Figure 24 - Classic Black Panel Bypass

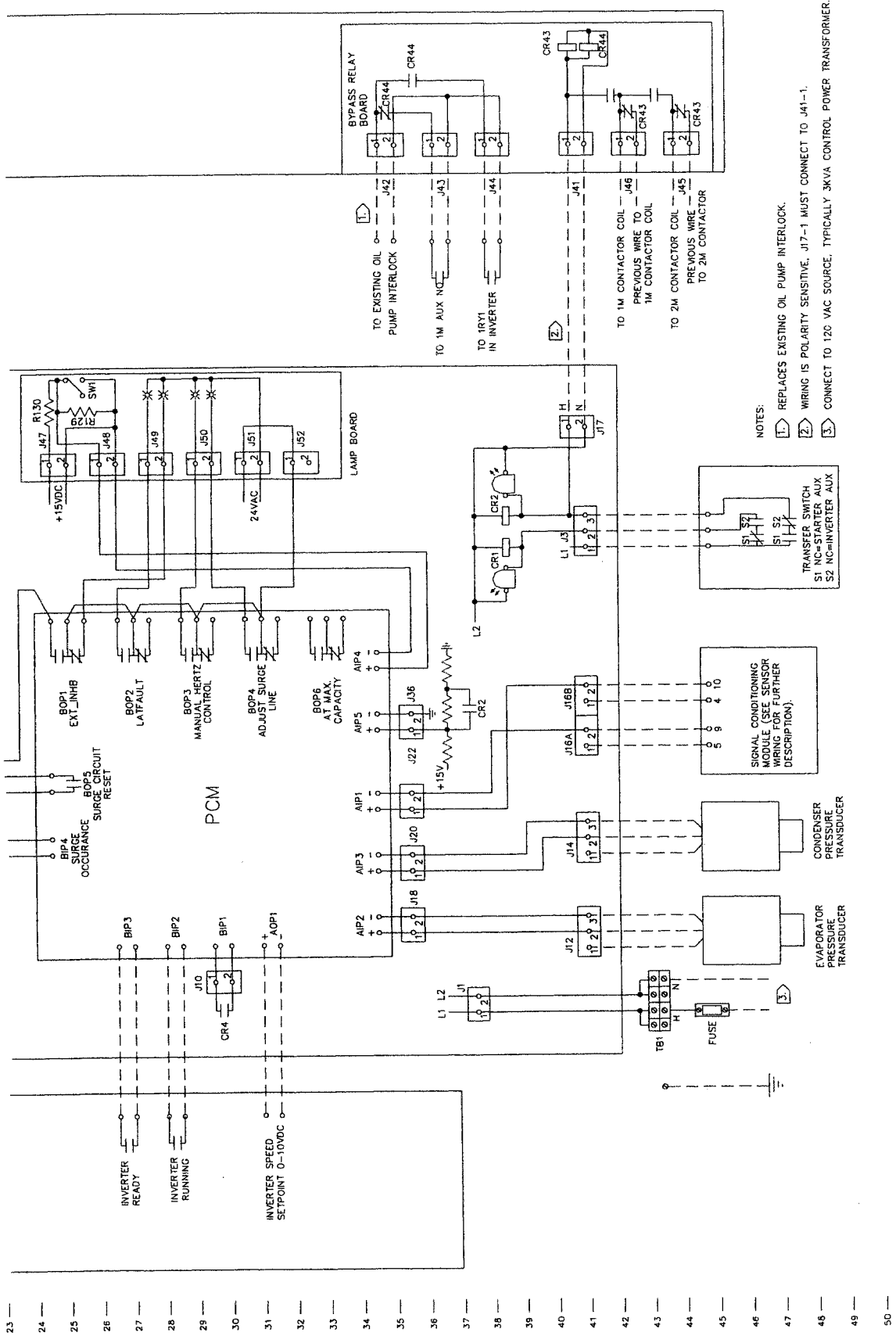

Figure 24 - Classic Black Panel Bypass

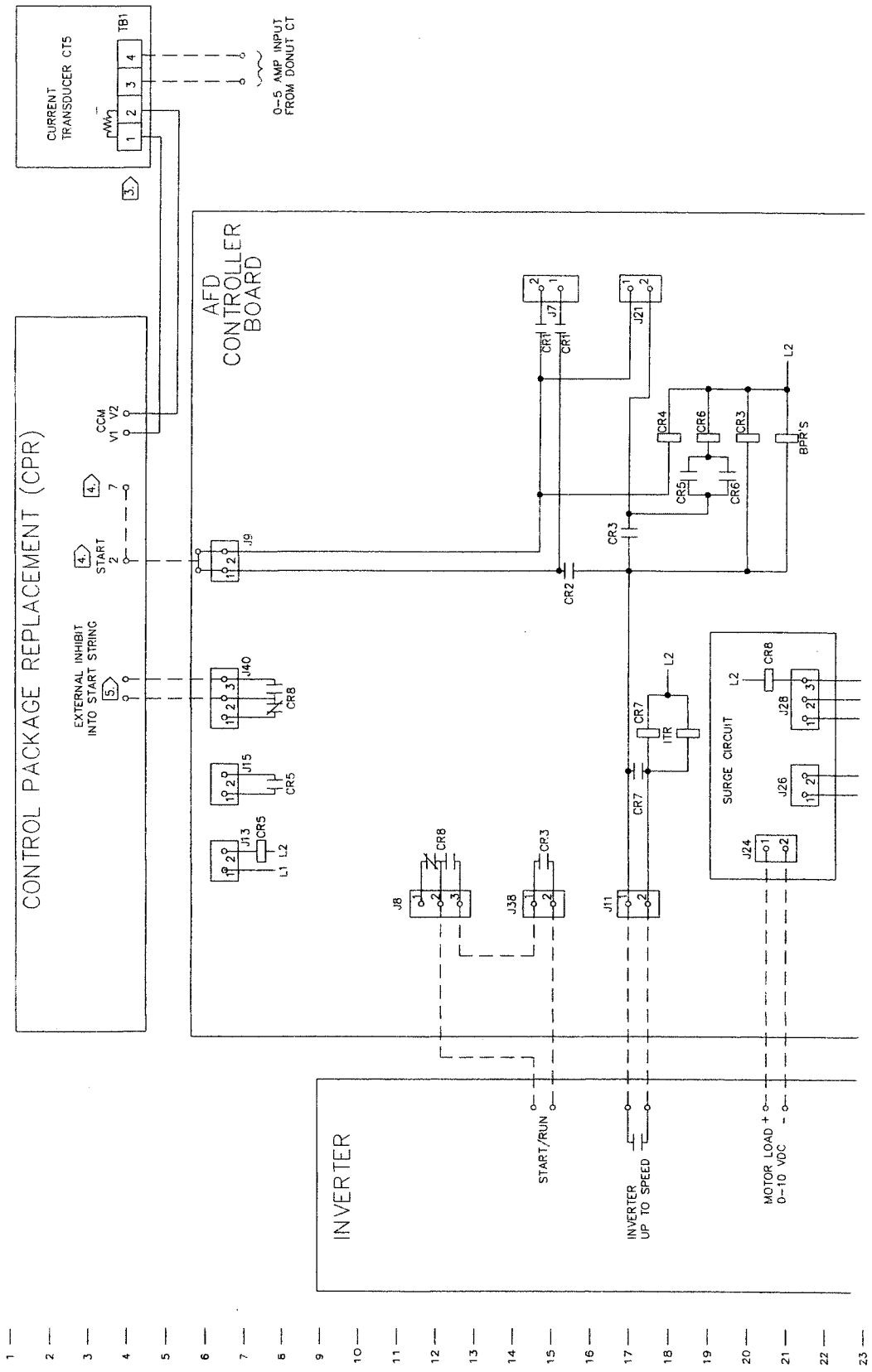

Figure 25 - CPR Non-Bypass

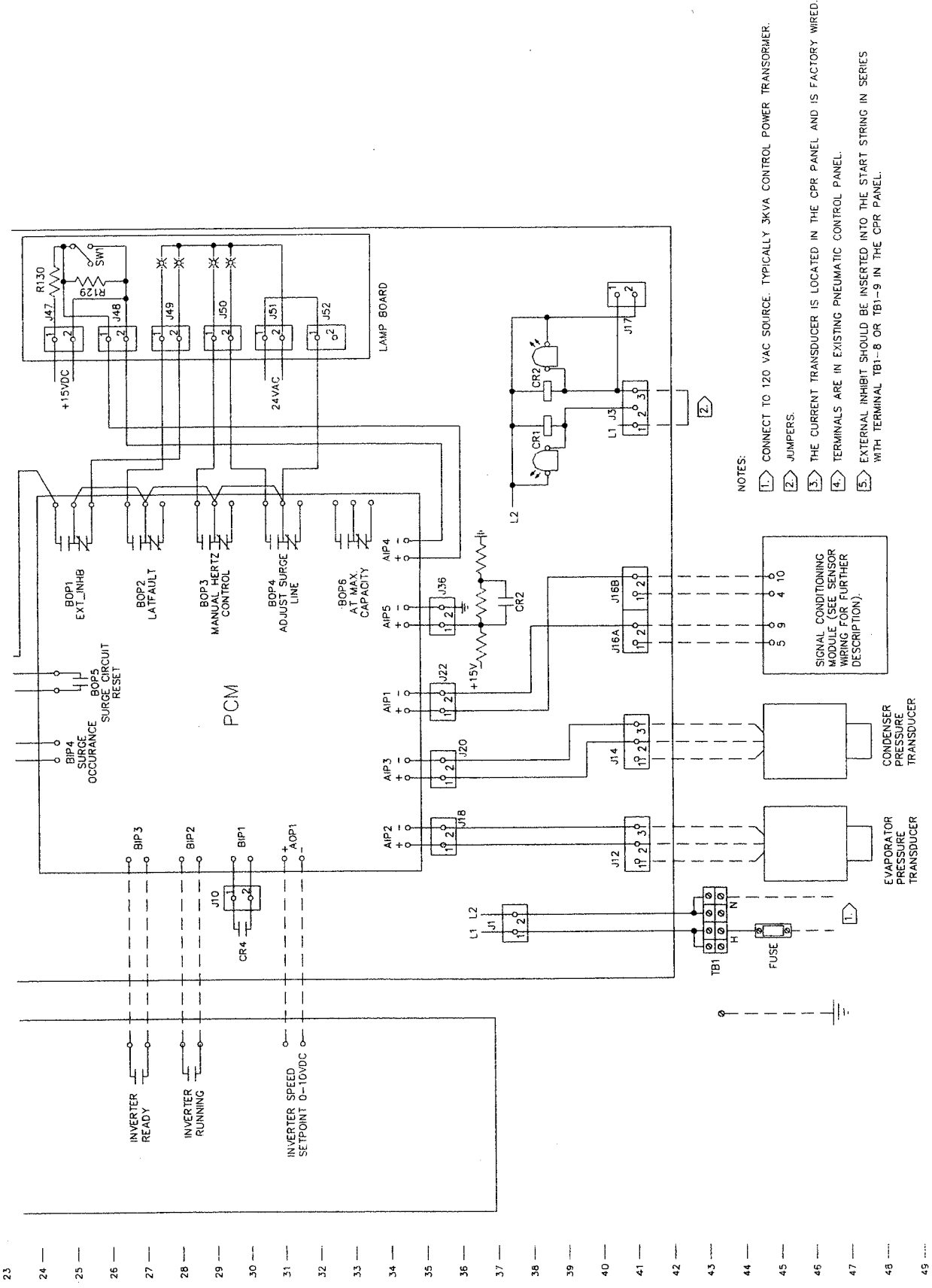

Figure 25 - CPR Non-Bypass

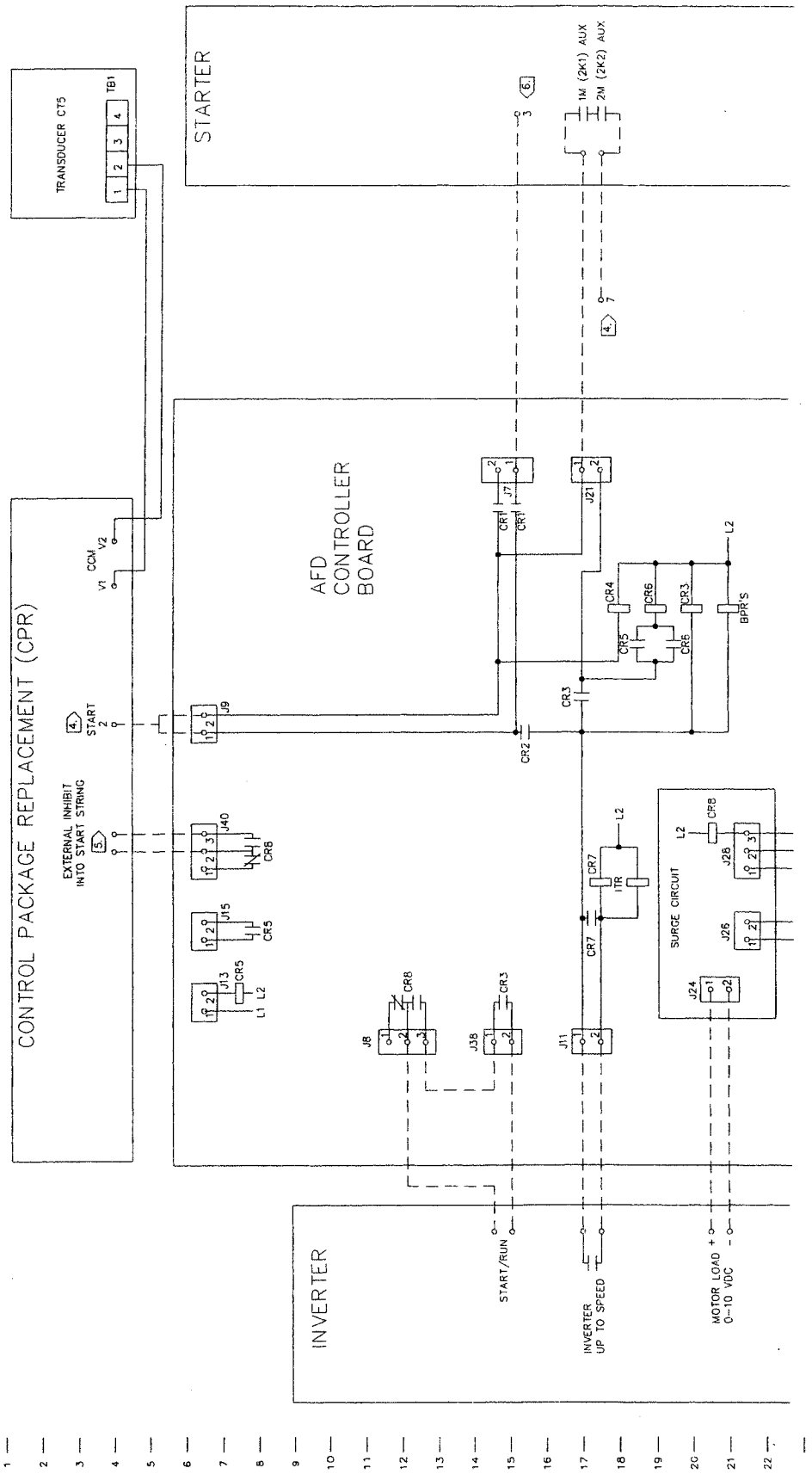

Figure 26 - CPR Bypass

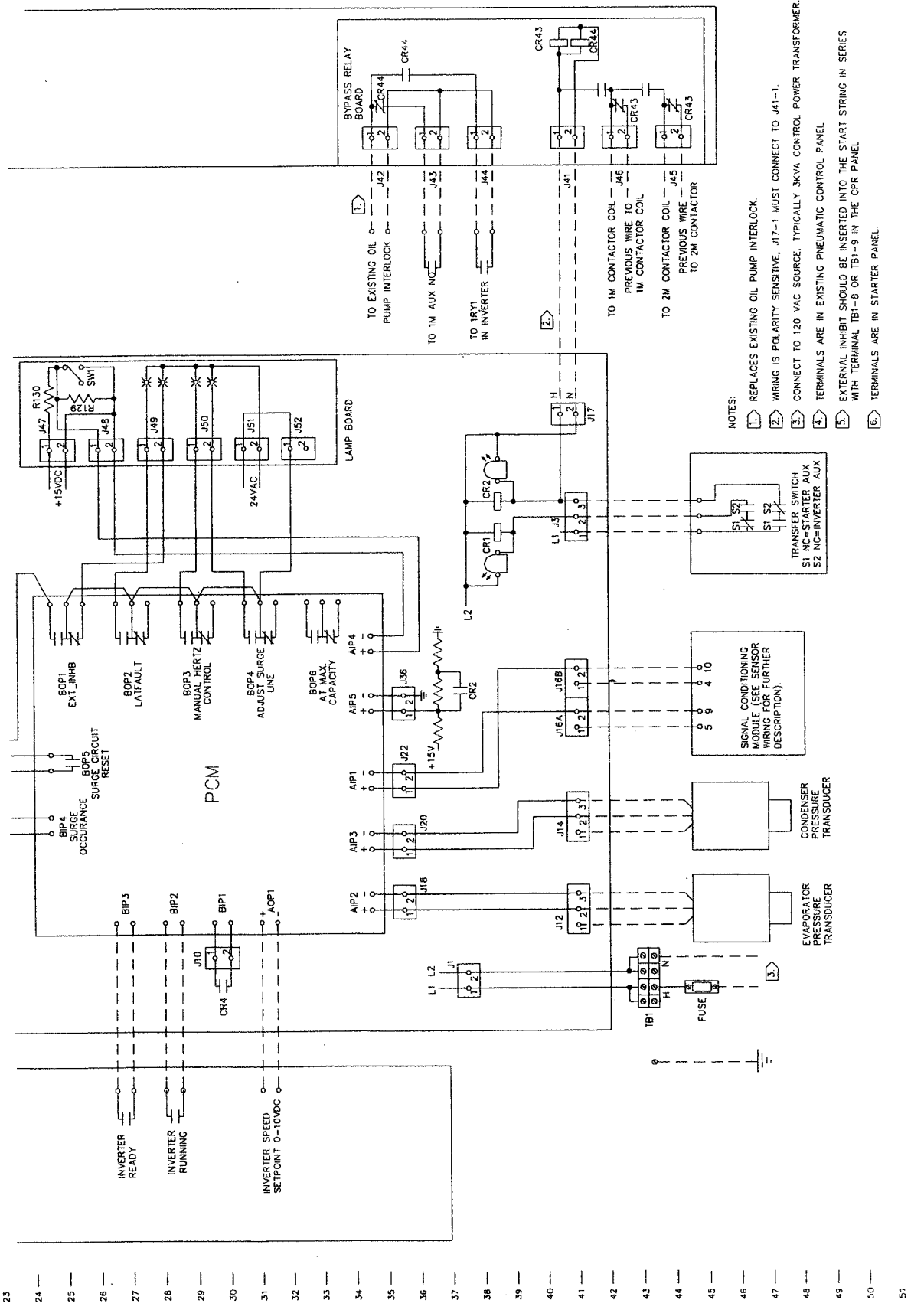

Figure 26 - CPR Bypass

TRANE®

Operation Maintenance AFDB-OM-1C

Library	Service Literature
Product Section	Refrigeration
Product	Centrifugal Liquid Chiller, Water-Cooled
Model	AFDB
Literature Type	Operation/Maintenance
Sequence	1C
Date	November 17, 2000
File No.	SV-RF-CTV-MISC-AFDB -OM-1C-800
Supersedes	AFDB -OM-1B-400

Liquid Cooled Adaptive Frequency™ Drive

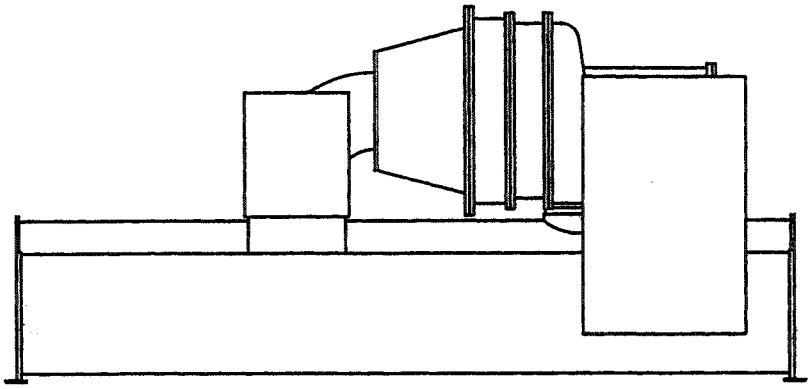

X39640506-04

Since the Trane Company has a policy of continuous product improvement and product data improvement, it reserves the right to change design and specifications without notice. Only qualified technicians should perform the installation and servicing of the equipment referred to in this publication.

NOTICE

Warnings and Cautions appear at appropriate locations throughout this manual. Read these carefully.

WARNING: Indicates a potentially hazardous situation which, if not avoided, may result in serious personal injury or death.

CAUTION: Indicates a potentially hazardous situation which, if not avoided, may result in minor or moderate injury. It may also be used to alert against unsafe practices and where property-damage only accidents could occur.

Table of Contents

Section	Name	Page
(1)	General Information	5
(2)	Introduction	10
(3)	Product Coding	11
(4)	Drive and Cabinet	15
(5)	Wire Routing	27
(6)	Connecting Power Wiring	40
(7)	Liquid Cooling Connections	46
(8)	Cabinet Servicing	49
(9)	UCP2-Parameter Information	55
(10)	UCP2 Operation	59
(11)	Keypad Introduction	67
(12)	Drive Status LEDs	74
(13)	Parameter Types	77
(14)	Ensuring Program Security	85
(15)	Troubleshooting Using Error Codes	90
(16)	Alarm Codes and Fault Codes	91
(17)	AFDB Cooling Circuit	99
(18)	AFDB Startup Procedure	106

Figure Numbers and Description	Page
Figure 1 - Trane Cabinet Component Locations (6-Pulse Rectifier) 600/450/350 HP	17-18
Figure 2 - Trane Cabinet Component Locations (6-Pulse Rectifier) 1000 HP	19
Figure 3 - Trane Cabinet Component Locations (12-Pulse Rectifier)	21
Figure 4 – Typical Line Reactor Showing General Purpose Enclosure	25
Figure 5 – Typical Line Wiring Showing Field Connection Point for Inverter	26
Figure 6 – 6A, 6B - Overall Cabinet Dimensions - 350, 450/600, 1000	28-30
Figure 7 – 7A, 7B - Cabinet Mounting Holes/Slots - 350, 450/600, 1000	31-33
Figure 8 – Cabinet Wire Routing Locations (6-Pulse Rectifier) Standard 350/450/600 HP	36
Figure 8A – Cabinet Wire Routing Locations (6-Pulse Rectifier) 1000 HP	37
Figure 9 – Cabinet Wire Routing Locations (12-Pulse Rectifier) S12 Isolation Transformer (Harmonic Attenuation)	38
Figure 10 – 6 Pulse – 12 Pulse Conversion	40
Figure 11 – Trane Cabinet Electrical Connections (6-Pulse Rectifier) Standard	42
Figure 12 – Trane Cabinet Electrical Connections (12-Pulse Rectifier) Isolation Transformer (Harmonic Attenuation)	44
Figure 13 – Liquid Cooling Bulkhead Fittings	47
Figure 14 – Liquid Cooling Connections	48
Figure 15 – Operating Modes as Chiller Load Varies Over Time	59
Figure 16 – Variables Involved in Desirable/Undesirable Compressor Operation	62
Figure 17 – Motor Current Signature Representing Surge	64
Figure 18 – Drive Frequency vs. Speed Reference Signal	65
Figure 19 – Starter Module to Unit Mounted Inverter Interface Block Diagram	66
Figure 20 – Key Pad/Display	67
Figure 21 – Example of a Monitor Mode Display	68
Figure 22 – Example of a Program Mode Display	70
Figure 23 – Parameter Menu Structure	76
Figure 24 – Procedure to Display or Change Parameter Values	78
Figure 25 – Entering the Second Menu Password	86
Figure 26 – Accessing, Reading, and Clearing Faults in the Error Log	96
Figure 27 – Schematic of the Cooling Circuit	99

Table Numbers and Description

	Page
Table 1 – Table Power and Enclosure Ratings	15
Table 2 – Cabinet Dimensions	27
Table 3 – Cabinet Mounting Hole Dimensions	27
Table 4 – Torque Value for the LCAFDB Output to Motor Flexibar	35
Table 5 – Hardware Tightening Torque	51
Table 6 – List of All UCP2 Parameters	55
Table 7 – List of Parameter Settings and Operating Criteria	58
Table 8 - Steps in Control Logic in UCP2 Operation Sequence	60
Table 9 – Display Examples	70
Table 10 – Auto/Man Key Reference	71
Table 11 – Monitor Mode LEDS	75
Table 12 – Control Source Displays/Speed Reference Source Displays	81
Table 13 – List of Alarm Codes	91
Table 14 – List of Fault Codes	92
Table 15 – List of Fault Codes Continued	93
Table 16 – List of Fault Codes Continued	94
Table 17 – List of Fault Codes Continued	95
Table 18 – List of Fault Codes that can be Reset	98
Table 19 – Concentration Limits of Impurities in Water	104

Forms

CenTraVac® Adaptive Frequency Drive™ Start-up and Operating Log	108
Start-up Procedures and Service Request	111

Unit Mounted Adaptive Frequency Drive™ Schematics

2307-5223-B, Unit Mounted Adaptive Frequency™ Drive UCP2 Schematic Wiring	112
2307-5230-B, Field Connection Wiring, CVHE, CVHF, CVHG	114

About this Manual

THIS MANUAL IS INTENDED FOR USE BY EXPERIENCED SERVICE PERSONNEL, QUALIFIED ELECTRICAL PERSONNEL, TRANE MANUFACTURING, AND ROCKWELL AUTOMATION GLOBAL TECHNICAL SERVICE PERSONNEL WHO ARE FAMILIAR WITH THE CUSTOM LIQUID-COOLING FEATURES DESCRIBED.

The instructions in this manual outline the procedures for operating the **UNIT-MOUNTED** Trane Adaptive Frequency™drive. Operation and maintenance of the controls are also explained in this manual.

Literature History

AFDB-OM-1C, November, 2000 = Added 1000 Hp, Replaced AFDB-OM-1B, Added Sizes 350, 414, 500, replaced AFDB-OM-1A, 5/99

Other Required Manuals

THE FOLLOWING PUBLICATIONS SHIP WITH THE TRANE ADAPTIVE FREQUENCY DRIVE FROM THE FACTORY:

- D2-3410 Liqui-Flo AC Drive Software Startup and Reference Manual
- D2-3411 Liqui-Flo AC Power Modules Hardware Reference, Installation, and Troubleshooting
- D2-3341 Remote Meter Interface (RMI) Board

Service Information

This equipment should be installed, adjusted and serviced by qualified electrical maintenance personnel who are familiar with the construction and operation of the equipment and the hazards involved, as defined in the National Electrical Code.

The Trane Company assumes no liability for installation or service procedures performed by unqualified personnel.

Parts Ordering Information

Refer to the model number printed on the Trane Adaptive Frequency Drive nameplate when ordering replacement parts or service for the drive. When ordering parts, contact the local Trane Parts Office in your area. For service, contact La Crosse Business Unit Technical Service, La Crosse, Wisconsin.

Primary Water Loop Water Charging

The primary water loop (the loop that runs through the inverter) must be charged with approximately 2 gallons of **distilled water**. In addition to the distilled water, you must add the 3-ounce bottle of **inhibitor solution** that has been shipped with the new unit from the factory. For replacement inhibitor solution, at a later date, contact the local Trane Parts Office.

Warnings and Cautions

NOTE THAT WARNINGS AND CAUTIONS APPEAR IN APPROPRIATE SECTIONS THROUGHOUT THIS MANUAL.

WARNINGS

Warnings are provided to alert installing contractors and other personnel to potential hazards that could result in serious personal injury or death.

CAUTIONS

Cautions are provided to alert personnel to conditions, which could result in moderate or minor personal injury, or damage to equipment or property. Your personal safety and the proper operation of this machine depend upon precautions.

⚠ WARNING

DO NOT CUT HOLES ADAPTIVE FREQUENCY™ DRIVE ENCLOSURE. DEBRIS FALLING INSIDE OF ADAPTIVE FREQUENCY DRIVE MAY CAUSE FAILURE OF ELECTRONIC COMPONENTS. Failure to follow this precaution could result in damaged equipment.

⚠ WARNING

HAZARDOUS VOLTAGE! ALLOW AT LEAST 10 MINUTES FOR DC UNITS TO DISCHARGE AFTER POWER IS DISCONNECTED BEFORE SERVICING. USE EXTREME CAUTION WHEN APPLYING POWER. EQUIPMENT TERMINALS AND OTHER INTERNAL PARTS OF THE CONTROLLER ARE AT LINE VOLTAGE WHEN AC POWER IS CONNECTED TO THE CONTROLLER. ALL UNGROUNDED CONDUCTORS OF THE AC POWER LINE MUST BE DISCONNECTED FROM THE CONTROLLER BEFORE IT IS SAFE TO TOUCH ANY INTERNAL PARTS OF THIS EQUIPMENT. AFTER POWER IS REMOVED, WAIT AT LEAST 10 MINUTES FOR THE DC LINK FILTER CAPACITORS TO DISCHARGE BELOW 50 VDC BEFORE TOUCHING ANY INTERNAL PARTS OF THE CONTROLLER. Failure to do so could result in death or bodily injury.

⚠ WARNING

ELECTRICAL INTERLOCKING CIRCUITS (MULTIPLE INTERCONNECTED ELECTRICAL CIRCUITS) MAY HAVE BEEN ADDED DURING INSTALLATION THAT COULD STILL BE ENERGIZED WHEN THE CONTROLLER INPUT MAIN BREAKER IS OPEN. SUITABLE WARNING TAGS OR DISCONNECTS SHOULD BE ADDED TO THESE CIRCUITS BEFORE ATTEMPTING TO ENERGIZE OR SERVICE THE CONTROLLER. Failure to follow these precautions can lead to death and bodily injury and/or equipment damage.

⚠ WARNING

DO NOT REMOVE OR INSERT CONTROL BOARDS OR FUSES WHILE INPUT POWER IS CONNECTED TO THE CONTROLLER. THIS CAUSES DAMAGE TO THE CONTROLLER, AS WELL AS BEING DANGEROUS TO PERSONNEL. Failure to follow this precaution could result in death or injury and equipment damage.

⚠ WARNING

BEFORE PROCEEDING WITH THE STARTUP PROCEDURE, DISCONNECT AND LOCKOUT ALL INCOMING POWER TO THE DRIVE CONTROLLER AND LOCKOUT ALL INCOMING POWER. Failure to follow this precaution could result in death or injury and equipment damage.

⚠ CAUTION

DO NOT USE A MEGGER TO PERFORM CONTINUITY CHECKS IN THE DRIVE EQUIPMENT.
Failure to follow the above precaution can cause damage to the controller circuitry.

⚠ WARNING
TERMINALS AND OTHER INTERNAL PARTS OF THE CONTROLLER ARE AT LINE VOLTAGE WHEN AC POWER IS CONNECTED TO THE CONTROLLER. ALL UNGROUNDED CONDUCTORS OF THE AC POWER LINE MUST BE DISCONNECTED FROM THE CONTROLLER BEFORE IT IS SAFE TO TOUCH INTERNAL PARTS OF THIS EQUIPMENT. EACH TIME POWER IS REMOVED, WAIT AT LEAST 10 MINUTES AND VERIFY THAT THE DC LINK FILTER CAPACITORS ARE DISCHARGED BEFORE TOUCHING ANY INTERNAL PARTS OF THE CONTROLLER. Failure to follow these precautions can result in death, injury and equipment damage.

⚠ WARNING
ELECTRICAL INTERLOCKING CIRCUITS MAY HAVE BEEN ADDED DURING INSTALLATION. THE CONTROLLER MAY STILL BE ENERGIZED WHEN THE CONTROLLER MAIN INPUT BREAKER IS OPEN. SUITABLE WARNING TAGS OR DISCONNECTS SHOULD BE ADDED TO THESE CIRCUITS AND ALL CIRCUITS SHOULD BE TESTED BEFORE ATTEMPTING TO ENERGIZE OR SERVICE THE CONTROLLER. IF THIS EQUIPMENT IS INTERLOCKED WITH OTHER EQUIPMENT, 115 VOLT AC MAY BE PRESENT IN THE CABINET EVEN THOUGH THE MAIN POWER IS DISCONNECTED. IF THIS IS THE CASE, THESE INTERLOCK SIGNALS SHOULD BE DEACTIVATED BEFORE ANY WORK IS PERFORMED ON THIS EQUIPMENT. Failure to do so could result in death, injury or equipment damage.

⚠ WARNING
FOLLOW SUBSEQUENT PRECAUTIONS IN THIS MANUAL. Failure to follow these precautions may cause death, serious personal injury, and/or property damage.

AFDB CHECKS

Safety Precautions

1. This equipment should be adjusted and serviced by qualified electrical maintenance personnel familiar with the construction and operation of the equipment and the hazards involved.
2. Be sure the input disconnect is in the correct position, either "on" or "off" depending on the work to be performed.
3. Check the status of the drive shutdown interlocks, if used. These interlocks can be limit switches, guards or safety switches installed around the driven machine or the system interface controller.

⚠ WARNING
THE INTERLOCKS ARE DEACTIVATED OR BYPASSED, EXTREME CAUTION MUST BE USED WHEN PERFORMING THE START-UP. Return all interlocks to operation when the start-up is completed.

4. Check to see that the AFDB is properly ground to earth. See "Grounding", in "Wire Routing" section.

5. Do not remove or insert control boards or fuses while input power is connected to the controller. This causes damage to the controller, as well as being dangerous to personnel.

⚠ WARNING
BEFORE WORKING ON THE CONTROLLER, CHECK TO BE SURE DC LINK CAPACITORS ARE DISCHARGED WITH A DC VOLTMETER ON THE 1000V SCALE. CHARGED CAPACITORS REQUIRE AT LEAST 10 MINUTES TO DISCHARGE TO LESS THAN 50V DC AFTER LINE POWER IS REMOVED. Failure to follow this precaution could result in severe burns or electrical shock.

⚠ WARNING
BEFORE PROCEEDING WITH THE START-UP PROCEDURE, DISCONNECT AND LOCKOUT ALL INCOMING POWER TO THE DRIVE CONTROLLER. Failure to heed this precaution could result in death due to severe electrical shock.

Motor Checks

1. Check the motor for proper horsepower and voltage ratings. Verify that the motor full load amps do not exceed the nameplate rating of the controller.

2. Check that the motor terminals are correctly connected to the controller's power terminals for the proper voltage and motor rotation.

3. Use an ohmmeter to check for any short circuits between the motor frame and the motor power leads. If a short circuit exists, it must be corrected before proceeding.

Controller Checks

1. Check that local, state and national electric codes have been observed for the installation and wiring of this equipment.

2. Check that all external power wiring has been properly routed through the cabinet.

3. Check all input power and output power connections for tightness.

4. Check the chassis ground and other connections for tightness.

5. Check all external control connections (this includes the operator station connections) for tightness.

6. Check to assure incoming power to the drive is phased A, B, C.

7. Check the primary water loop water pump for correct rotation.

Receiving and Storage

TRANE COMPANY STANDARD TERMS OF SALES ARE F.O.B. POINT OF ORIGIN; THEREFORE, IT IS IMPORTANT, THAT YOU THOROUGHLY INSPECT THIS EQUIPMENT BEFORE ACCEPTING SHIPMENT FROM THE TRANSPORTATION COMPANY.

If any of the items called for on the bill of lading or express receipt are damaged or the quantity is short, do not accept them until the freight or express agent makes an appropriate notation on your freight bill or express receipt. If any concealed loss or damage is discovered later, notify your freight or express agent within 15 days of receipt, request that he makes an inspection.

IT IS YOUR RESPONSIBILITY TO MAKE CLAIMS AGAINST THE TRANSPORTATION COMPANY FOR ANY SHORTAGE OR DAMAGE IN TRANSIT.

Claims for loss or damage in shipment must not be deducted from the Trane invoice, nor should payment of the invoice be withheld awaiting adjustment of such claims in as much as the transportation company guarantees safe delivery.

If considerable damage has been incurred and the situation is urgent, contact the nearest Trane Sales Office for assistance.

Lifting Instructions

Care should be used to prevent damage due to dropping or jolting when moving the controller. A fork lift truck or similar means of lifting and transporting may be used. Sling in a manner that will equalize the load at the pickup points. Use a spreader bar if the angle of the sling is less than 45 degrees relative to horizontal. Do not jolt while lifting.

AFDB Information

Environment Conditions and Location

IMPORTANT! LOCATION OF THE AFDB IS IMPORTANT IF PROPER PERFORMANCE AND NORMAL OPERATING LIFE IS TO BE EXPECTED. THEREFORE, UNLESS DESIGNED FOR SPECIAL ENVIRONMENTS, THE CONTROLLER SHOULD BE INSTALLED IN AN AREA WHERE THE FOLLOWING CONDITIONS EXIST:

1. Maximum ambient temperature of 40° C (104°F).
2. Ambient temperatures are not less than 0° C (32°F).
3. Line frequency is 60 Hz.
4. Line voltage is 480/460 volts; variations are within ±10%.
5. Altitude above sea level does not exceed 3,300 feet (1000 meters) without de-rating.
6. Ambient humidity is 0 to 95%, non-condensing.
7. Non-corrosive location.
8. NEMA 1 enclosure, clean location.
9. No outdoor applications are permitted to prevent freezing of the water-cooled inverter.

IMPORTANT: THIS IS A WATER-COOLED INVERTER THAT CONTAINS WATER IN THE INVERTER. THE UNIT MUST BE KEPT ABOVE 32° (DEGREES) IN STORAGE AND OPERATION.

(2) Introduction

The AFDB water-cooled Adaptive Frequency™ Drive is a pulse width modulated (PWM) inverter. The function of the inverter is to change a DC input voltage to a symmetrical AC output voltage of desired magnitude and frequency. It is designed for 460/480-volt application. This drive converts AC power to DC power and back to AC power. The incoming 460/480 volts are converted to a constant 650 VDC by a rectifier bridge (SCR's and diodes), and into a section of water-cooled capacitors that are used to store the DC voltage. The DC output feeds the IGBT (insulated gate by polar transistors section) which are transistors that switch at predetermined time to change the output frequencies from 38 to 60 hertz.

The DC voltage is fixed at 650 VDC. A variable output is accomplished by pulse-width-modulation (PWM) control within the inverter by IGBTs which are basically transistors that turn on and off in response to the gate driver (which in this case is the power module adapter board).

Two distinct operating modes make up the AFDB control within the UCP2. In the 1st mode, the capacity is modulated by controlling the inlet vanes. Once the vanes are wide open the capacity is controlled by modulating impeller speed from 38 to 60 hertz. The IGBTs control the speed in response to the UCP2 load demand sending a signal to the AFDB power module adapter board.

Circuit breakers, surge capacitors and ground faults are standard on all AFDB units.

Some of the basic principles of the drive are:

- Low in rush current
- The current never exceeds the full load amps
- The AFDB varies the motor speed in response to the load demand of the CenTraVac®

The CenTraVac Control Panel has full control of the unit operation, including the start/stop functions. If you encounter a fault condition or an alarm on the drive, a (3) letter code will be displayed on the drive display only.

AFDB-OM-1 covers the features and specifications that are unique to the Trane Adaptive Frequency drives being produced for the Trane Company. Only product information is covered here that supplements that presented in the standard Liqui-Flo instruction manuals that ship with the unit. AFDB-OM-1 must be used with the Liqui-Flo software and hardware instruction manuals listed below.

1.1 Intended Audience

This manual is intended for Trane Technical Service personnel who are familiar with the custom liquid-cooling features described.

1.2 Other Required Manuals

The manuals below ship with the Adaptive Frequency Drive from the factory.

- D2-3410 Liqui-Flo AC Drive Software Startup and Reference Manual
- D2-3411 Liqui-Flo AC Power Modules Hardware Reference, Installation, and Troubleshooting
- D2-3341 Remote Meter Interface (RMI) Board

(3) Product Coding

Service Model Number

An example of a typical model number is: **AFDB0035FA0A1ASA6CE**

Model Number Digit Identification – model number digits are selected and assigned in accordance with the following definitions using the model number example shown above.

AFDB = Adaptive Frequency Drive
AFD = (1st, 2nd, 3rd.digit) = Adaptive Frequency Drive
B = (4th digit) = Development Sequence
B = Liquid Cooled

0035 = (5th, 6th, 7th, and 8th digit) Adaptive Frequency Drive Size

Use Rated Load Amps (RLA) value

F = (9th digit) Unit Voltage

F = 460V-60Hz-3Ph
G = 480V-60Hz-3Ph

A0 = (10th and 11th digit) Design Sequence

A0 = First Design
B0 = Add 500 SRRL and inc 386 to use 500
C0 = Revised Contactor Connection
D0 = 350 hp AFD and replace 386 Max RLA with 414 Max RLA
E0 = Standardized Pump Heat Exchanger

A = (12th digit) ADF Mounting Location

A = Unit mounted
B = Remote mounted

I = (13th digit) Agency Listing

I = UL & C UL

A = (14th digit) Harmonic Attenuation

0 = None
A = Size "1" line reactor 386 Max RLA
B = Size "2" line reactor 643 Max RLA
C = S12 Isolation Transformer (3 phase Line/load reactor)
D = Size "3" line reactor 500 Max RLA
E = Size "1" line reactor 414 Max RLA
F = Size "4" line reactor 1157 Max RLA

S = (15th digit) Special Options

0 = None
S = Special

A = (16th digit) Pump & Heat Exchanger Size

A = Size "A" Pump & Heat Exchanger
B = Size "B" Pump & Heat Exchanger
C = Size "C" Pump & Heat Exchanger
D = Size "D" Pump & Heat Exchanger

6 = (17th digit) Condenser Size

3 = 032S Short Condenser Shell
4 = 032L Long Condenser Shell
5 = 050S Short Condenser Shell
6 = 050L Long Condenser Shell
7 = 080S Short Condenser Shell
8 = 080L Long Condenser Shell
C = 142L Long Condenser Shell
E = 210L Long Condenser Shell
F = 250L Long Condenser Shell

C = (18th digit) Condenser Water Box

A = 150 PSI Marine – 2 pass STD
C = 150 PSI Non-Marine – 2 pass STD
E = 300 PSI Marine – 2 pass STD
G = 300 PSI Non-Marine – 2 pass STD

E = (19th digit) Condenser Water Box Arrangement

A = In RH end – Out RH end
B = In LH end – Out LH end
C = In LH front – Out LH front
D = In LH rear – Out LH rear
E – In RH front – Out RH front
F = In RH rear – Out RH rear
G = In LH front – Out LH rear
H = In LH rear – Out LH front
J = In RH front – Out RH rear
K = In RH rear – Out RH front

(3) Product Coding

Feature Category and Code Definitions

The following provides the description of the Feature Category for each Unit Mounted Frequency Inverter.

AFDB
Liquid Cooled Drive

CNIF
Control Interface

UCP2
Micro Processor 2nd Generation

MODL
Starter Model

CTV
CenTraVac® Unit

LNRC
Input Line Reactor
S12 = Isolation Transformer (Harmonic Attenuation)

SRTY
Starter Type

UAFD
Unit Mounted AFD

SRRL
Frequency Drive Frame Size
Frame Size 1 = 643 Max RLA
Frame Size 2 = 1157 Max RLA

VOLT
Unit Voltage
460 = 460V 3 Phase
480 = 480V 3 Phase

HRTZ
Unit Hertz
60 = 60 Hertz

FSUP
Factory Start-up - AFD
LM = 50 Miles or less
HM = 51 Miles or more

HRIN
Harmonic Attenuation

LNRC = S12 Isolation Transformer (Harmonic Attenuation)
Line Reactor

NMRA
Nameplate RLA

DSEQ
Design Sequence
AO = First Design
BO = Add 500 SRRL, include 386
CO = Revised Contactor Connection
DO = 350 AFD & 414 SRRL
EO = Standardized Pump Heat Exchanger

SOSPT
Special

(4) Drive and Cabinet

THIS SECTION DESCRIBES HOW TO IDENTIFY THE TRANE CABINET AND THE ADAPTIVE FREQUENCY™ DRIVE USING THE TRANE MODEL NUMBER MATRIX.

Drive power ratings are listed as well as available Trane options. Cabinet component drawings are also provided. Note that in the manual references to the "cabinet" refer to both the 6-pulse (Standard) and 12-pulse optional (S12 - Isolation Transformer) (Harmonic Attenuation) rectifier cabinets, unless otherwise indicated. Below Table 1 shows an example of a Trane Cabinet Model Number as well as enclosure and drive power ratings.

Table 1 - Table Power and Enclosure Ratings

Trane Cabinet M/N	Frame Size	Cabinet Enclosure Rating	Input KVA	Input Amps	Output Amps at 2 kHz	Power Loss Watts (Full Load)
AFDB0643GA0A10	C	NEMA 1	555	667	643	9000

Enclosure Rating

The Trane cabinet has a NEMA 1 enclosure rating:

- NEMA 1: Vented. Intended for general-purpose indoor applications.

NEMA 1 enclosures are to be located in a clean, cool, and dry environment that is away form oil, coolant, or other airborne contaminants.

(4) Drive and Cabinet

Identifying Trane Cabinet Components

The **6-pulse (Standard) rectifier** Trane cabinets have the following main components. The identification numbers provided correspond to the numbers used in Figure 1.

1. **Cabinet**
2. **Panel**
3. **C-Frame Adaptive Frequency™ Drive**
4. **Power Module Adapter Board** – Provides the interface between the drive's electronics and power structure.
5. **Liqui-Flo Bus Control Board** – Controls the drive's power supplies and SCRs
6. **Liqui-Flo Regulator Board** – Controls overall drive operation
7. **Super Remote Meter Interface (RMI) Board** – Provides additional analog I/O
8. **Coolant Lines** – (a) Outlet, (b) Inlet lines
9. **Motor Connection Studs (6) P/O CTV**
10. **AC Input Bus bars** (6-Pulse Standard Rectifier)
11. **Current Transformer (3)** – Used by the Trane UCP2 Control Panel to monitor output current
12. **1200 A Circuit Breaker**
13. **4 KVA Transformer** – Steps down the 480 VAC input voltage to 115 VAC
14. **(3) Type RK-5 Fuses** – Protect the primary of the 4 KVA transformer – (1 fuse: 2 Amp) (2 fuses: 15 Amp)
15. **(2) Type K5-Fuses** – Protect the coolant pump's reactor (1 fuse: 10 Amp) and the Starter module's 115 VAC line (1 fuse: 30 Amp)
16. **Terminal Block** – Provides termination points for cabinet I/O wiring
17. **Potential Transformer (3)** – used by the Trane UCP2 Control Panel to measure the 480 VAC input voltage
18. **Trane Starter Module** – Interfaces the Adaptive Frequency™ Drive to the Trane UCP2 Control Panel
19. **Relay 2K1** – Oil pump interposing relay
20. **Relay 2K2** – Run/Stop function interposing relay
21. **Relay 2K3** – Circulating coolant pump motor interposing relay
22. **50 VA Transformer 460VAC / 115VAC / 24VAC** – Supplies power to the Trane Starter Module
23. **Fan** – Provides cooling for the DC bus reactor
24. **Removable Plate** - Provides chain hoist access
25. **Surge Suppressor**

Figure 1 - Trane Cabinet Component Locations (Standard) 6-Pulse Rectifier 600/450 HP and 350 HP continued on next page.

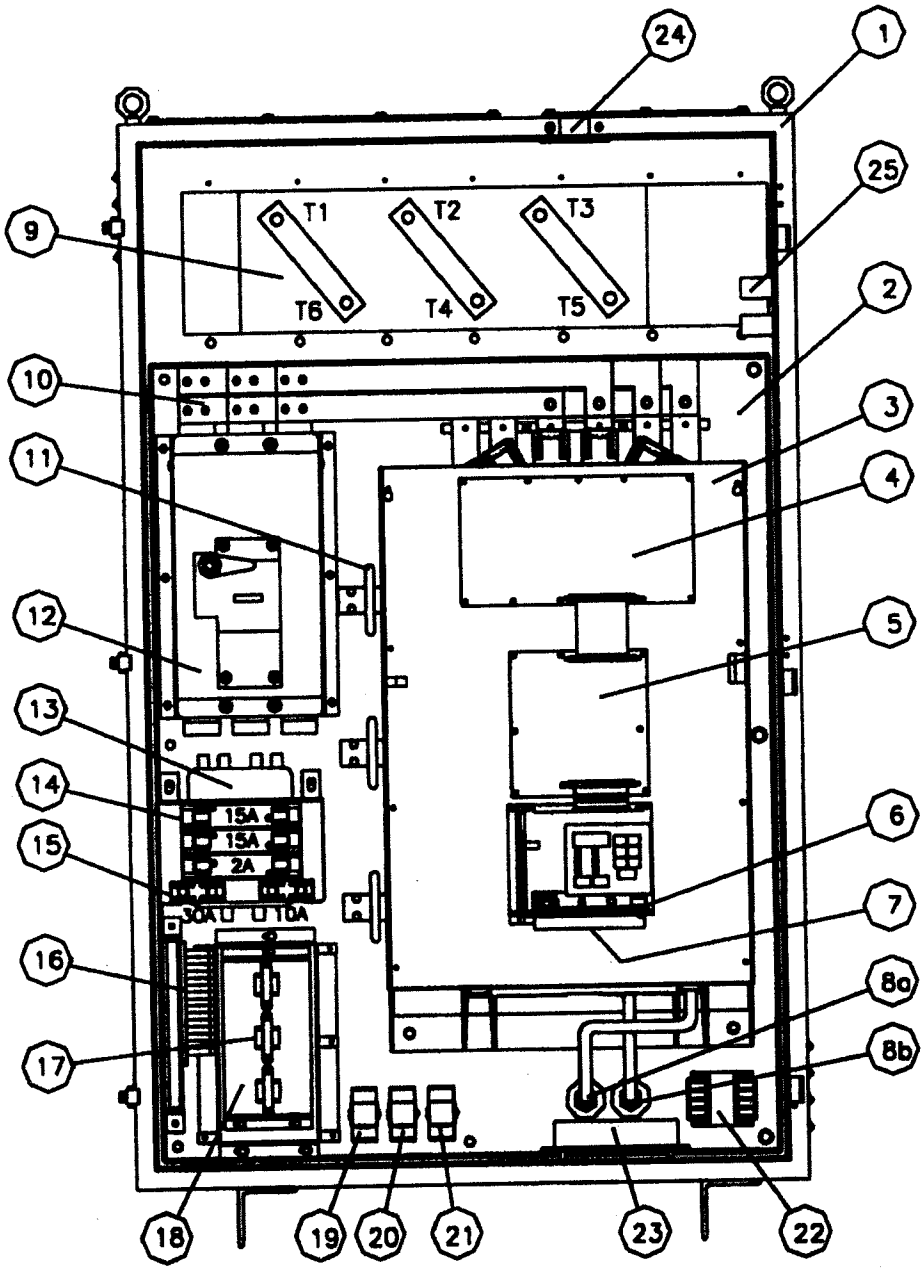

Front View

Continued - Figure 1 - Trane Cabinet Component Locations (Standard) 6-Pulse Rectifier 350 HP

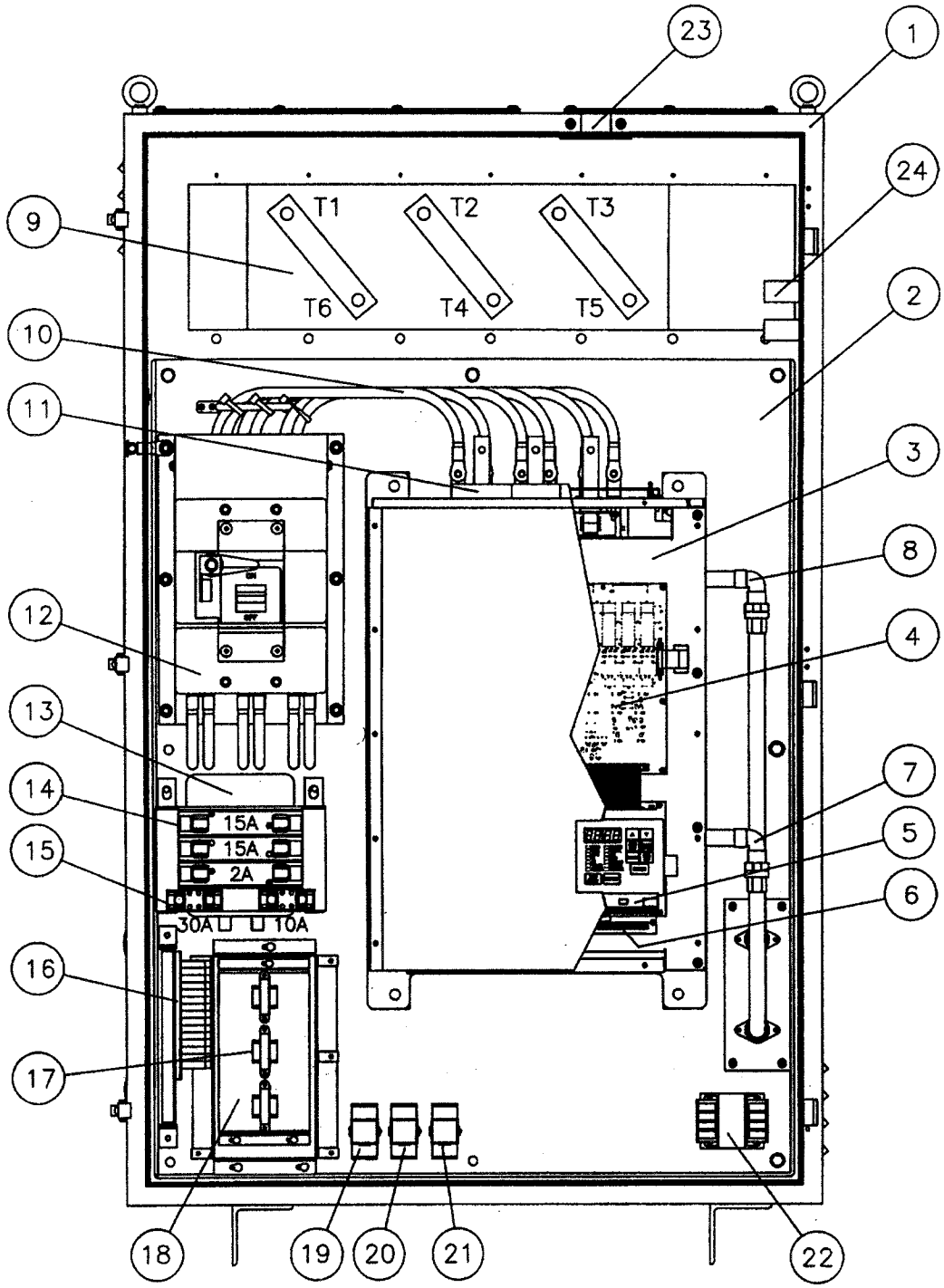

Front View

Figure 2 - Trane Cabinet Component Locations (Standard) 6-Pulse Rectifier 1000 HP

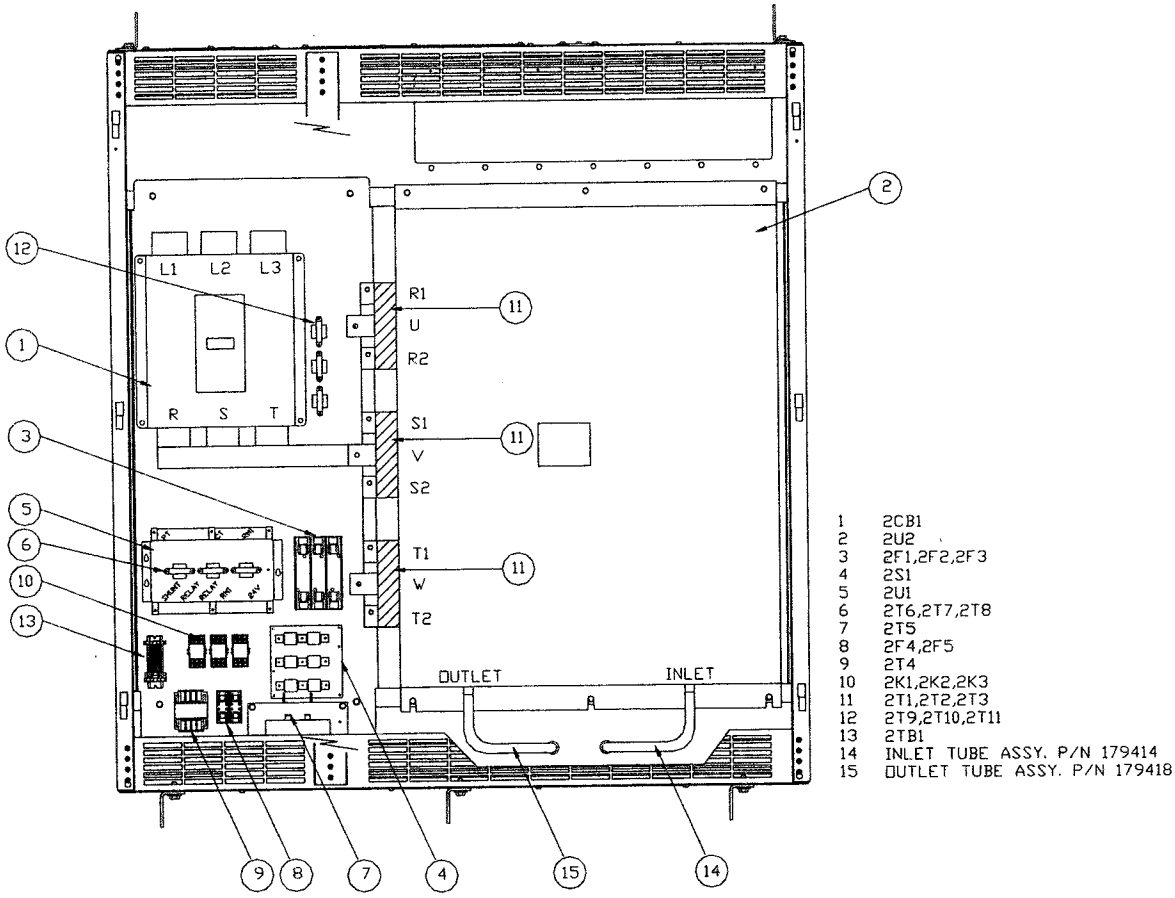

(4) Drive and Cabinet

The **12-pulse rectifier** (Optional Isolation Transformer Harmonic Attenuation) Trane cabinets have the following main components. The identification numbers provided correspond to the numbers used in Figure 3.

NOTE: HAS TO USED WITH OPTIONAL S-12 ISOLATION TRANSFORMER

1. **Cabinet**
2. **AC Input to Drive** (from Secondary of Isolation Transformer)
3. **Panel**
4. **C-Frame Adaptive Frequency™ Drive**
5. **Power Module Adapter Board** – Provides the interface between the drive's electronics and power structure.
6. **Liqui-Flo Bus Control Board** – Controls the drive's power supplies and SCRs
7. **Liqui-Flo Regulator Board** – Controls overall drive operation
8. **Super Remote Meter Interface (RMI) Board** – Provides additional analog I/O
9. **Coolant Lines (2)** – 9a outlet and 9b inlet lines
10. **Motor Connection Studs (6) P/O CTV**
13. **Current Transformer (3)** – Used by the Trane UCP2 Control Panel to monitor output current
15. **4 KVA Transformer** – Steps down the 480 VAC input voltage to 115 VAC
16. **(3) Type RK-5 Fuses** – Protect the primary of the 4 KVA transformer – (1 fuse: 2 Amp) (2 fuses: 15 Amp)
17. **(2) Type K5 Fuses** – Protect the coolant pump's reactor (1 fuse: 10 Amp) and the Starter module's 115 VAC line (1 fuse: 30 Amp)
18. **Terminal Block** – Provides termination points for cabinet I/O wiring
19. **Potential Transformer (3)** – used by the Trane UCP2 Control Panel to measure the 480 VAC input voltage
20. **Trane Starter Module** – Interfaces the Liqui-Flo Drive to the Trane UCP2 Control Panel
21. **Relay 2K1** – Oil pump interposing relay
22. **Relay 2K2** – Run/Stop function interposing relay
23. **Relay 2K3** – Circulating coolant pump motor interposing relay
24. **50 VA Transformer 460VAC / 115VAC / 24VAC** – Supplies power to the Trane Starter Module
25. **Fan** – Provides cooling for the DC bus reactor
26. **Removable Plate** - Provides chain hoist access
28. **Door Interlock Switch** - Rating 10A – 125/250 VAC

Figure 3 - Trane Cabinet Component Locations (12-Pulse Rectifier Optional S12 Isolation Transformer) (Harmonic Attenuation Device)

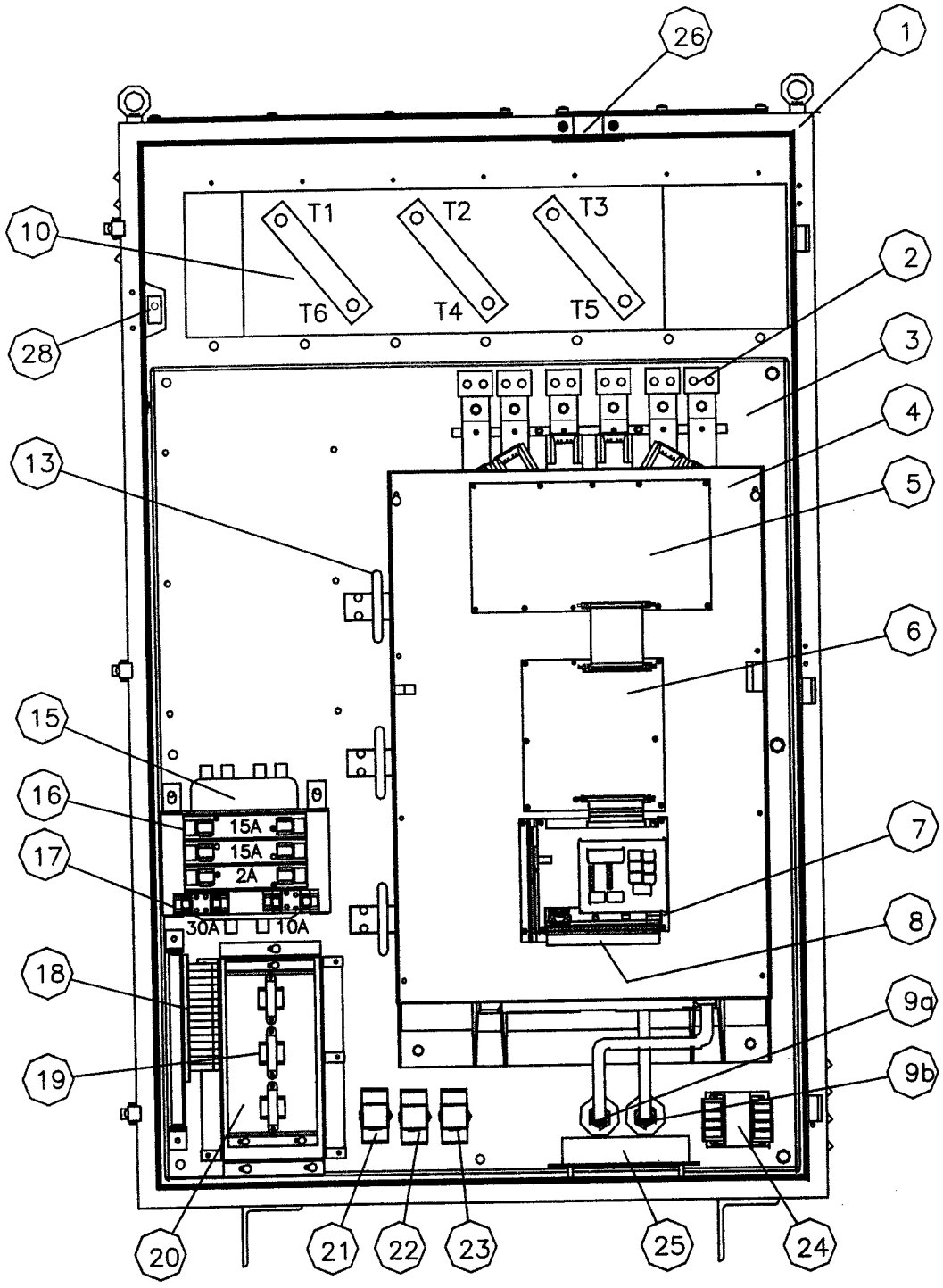

Adaptive Frequency Drive TRANE Options

THERE ARE THREE AVAILABLE TRANE OPTIONS WHICH CAN SHIP EITHER FACTORY INSTALLED OR FIELD INSTALLED.

1. 3-PHASE LINE/LOAD REACTOR

1.1. Physical Characteristics (See Figure 4)

a. Ratings

1. 480 volts, 50/60 Hz, 3 PH
   350 HP/262 kw
   5% Impedance

2. 480 volts, 50/60 Hz, 3PH
   500 HP/375 kw
   5% Impedance

3. 480 volts, 50/60 Hz, 3PH
   600 Hp/450 kw
   5% Impedance

4. 480 volts, 50/60 Hz, 3PH
   1000 Hp/750 kw
   5% Impedance

b. Enclosure and Dimensions

All line reactors come in NEMA Type 1 general purpose enclosures. (See Figure 4).

1. W x H X D, 17 x 24 x 17 (inches) – 350 Hp
2. W X H X D, 17 x 24 x 17 (inches) – 500 Hp
3. W X H X D, 24 x 30 x 24 (inches) – 600 Hp
4. W X H X D, 36 x 43 x 26 (inches) -- 1000 Hp

c. Weight

1. 335 lbs. - 350 Hp
2. 335 lbs. - 500 Hp
3. 483 lbs. - 600 Hp
4. 780 lbs. - 1000Hp

1.2. Mounting

Following are recommendation guidelines for the mounting of the line reactor. Floor mount design, however, could be wall mounted by the field using proper guidelines. (Brackets, which are required, are not supplied and would have to be field fabricated.) Line Reactor not designed for hanging.

The Line Reactor should be placed at least 6" from any combustible surface. Wire size should be per the drive requirements. There are no knockouts in the cabinet: Entry/exit openings must be made in the field.

For additional information about the Line Reactor, see Figure 4.

1.3. Line Reactor Installing Guidelines

The line reactor should be placed at least 6" from any combustible material/surface, at least 2" from any wall/surface so the vents are not blocked and air flow is not hampered, and not on top of any significant heat source.

Wire size should be per the drive requirements.

Use metallic conduit/shielded cable in accordance with local codes.

IDEALLY, THE LINE REACTOR SHOULD BE INSTALLED AS CLOSE TO THE AFD AS POSSIBLE. IF METALLIC CONDUIT IS USED, RECOMMENDED MAXIMUM CABLE DISTANCE BETWEEN THE REACTOR AND INVERTER IS 8-10 FEET. IF METALLIC CONDUIT IS NOT USED, CABLE DISTANCE BEWEEN THE REACTOR AND INVERTER SHOULD NOT EXCEED 5-FEET. If cable does run near other circuitry wire, it is recommended to run cable perpendicular to other wire(s).

There are no knockouts in the cabinet. Entry/exit openings must be made in the field. RECOMMENDED ENTRY/EXIT OPENINGS ARE THROUGH THE TOP.

For additional information about the Line Reactor, see Figure 4.

1.4. Wiring

Size – Based on inverter requirements (Running Load Amps) Line side – based on nameplate amps and local code requirements (NEC). See Figure 5.

Wire termination devices on the primary and secondary of the transformer (for field installed) or primary/line side only (for factory mounted) must be field furnished and installed. Ring-type compression terminal devices are suggested.

Entry/Exit points are made in the field. Typical entry/exit points are through the top. Avoid getting any enclosure shavings on line reactor. A punch out is recommended to make hole. For Factory Unit Mounted version only entry point is needed.

1.5. Grounding

The field will have to provide a grounding lug(s) and the proper size wire based on NEC.

1.6. Environment Conditions and Location

a. Maximum ambient temperature of 40° C (104°F).

b. For every 300 feet above 3,300 feet, the rated output current shall be decreased by 1%.

2. S12 ISOLATION TRANSFORMER (HARMONIC ATTENUATION)

When this option is provided, the standard inverter circuit breaker will be relocated from the drive cabinet to this autotransformer cabinet. This is field installed and must be mounted within sight of the chiller motor.

3. FACTORY STARTUP

(Factory Startup by Rockwell is an option that can be purchase with the unit.) See Start-Up Checklist and Service Request form at the end of this manual.

gure 4 - Typical Line Reactor Showing General Purpose Enclosures

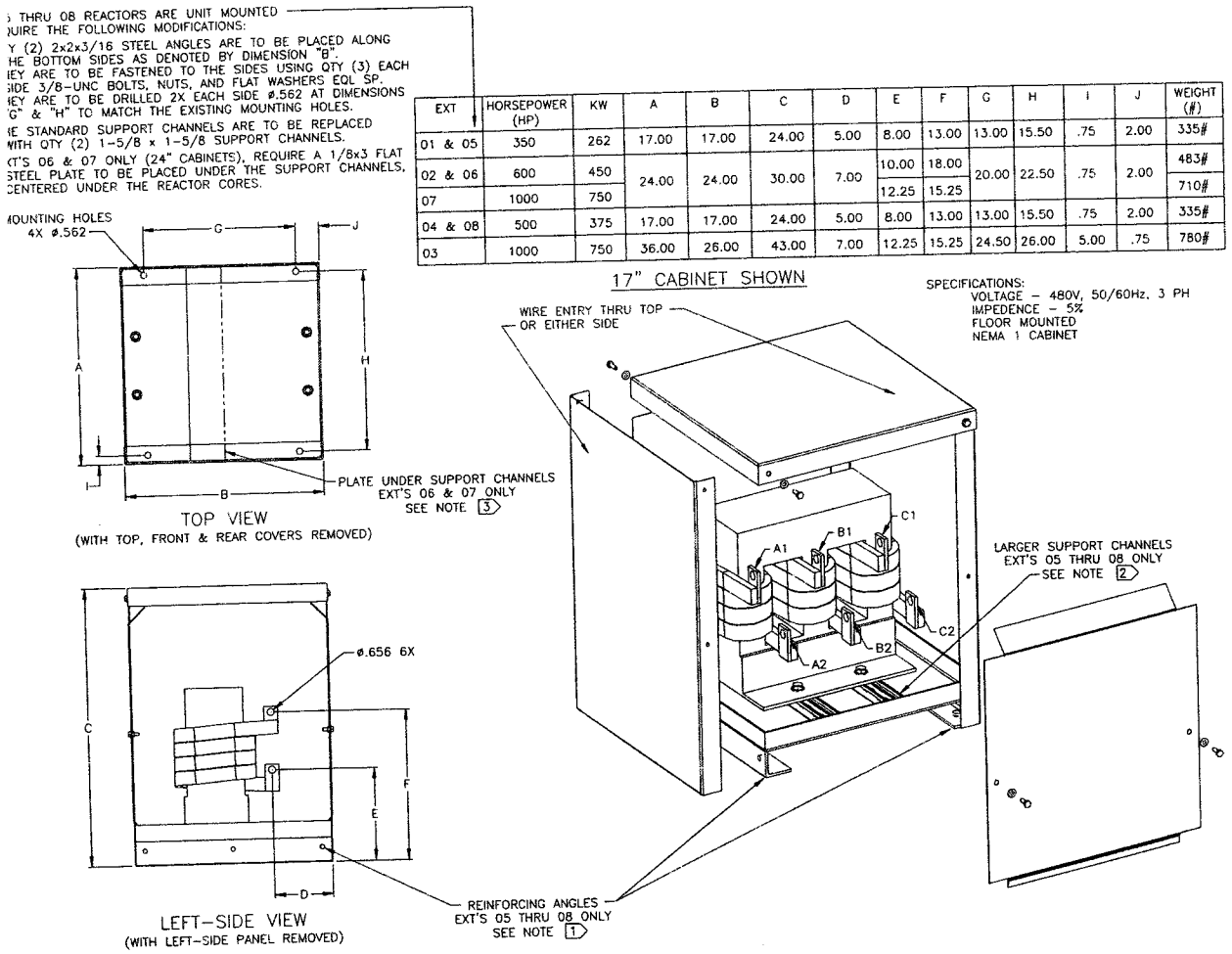

EXT	HORSEPOWER (HP)	KW	A	B	C	D	E	F	G	H	I	J	WEIGHT (#)
01 & 05	350	262	17.00	17.00	24.00	5.00	8.00	13.00	13.00	15.50	.75	2.00	335#
02 & 06	600	450	24.00	24.00	30.00	7.00	10.00	18.00	20.00	22.50	.75	2.00	483#
07	1000	750					12.25	15.25					710#
04 & 08	500	375	17.00	17.00	24.00	5.00	8.00	13.00	13.00	15.50	.75	2.00	335#
03	1000	750	36.00	26.00	43.00	7.00	12.25	15.25	24.50	26.00	5.00	.75	780#

Figure 5 - Typical Line Wiring Showing Field Connection Point for Inverter

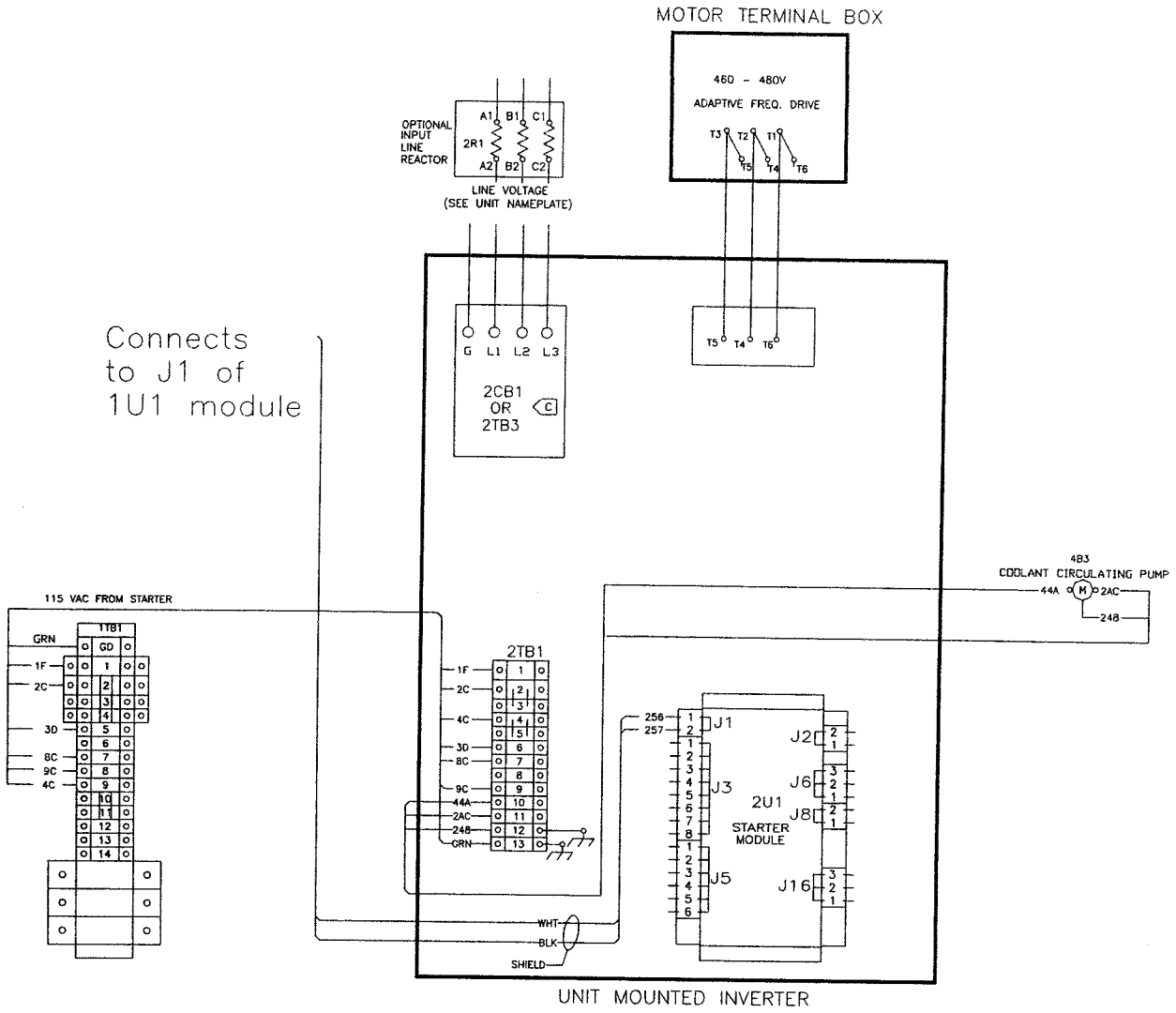

(5) Wire Routing

THIS SECTION PROVIDES CABINET DIMENSION INFORMATION. IT DESCRIBES THE CABINET AND SHOWS WHERE THE WIRE ENTRY AREAS AND LIQUID-COOLING CONNECTION POINTS ARE LOCATED.

About the Cabinet

Cabinet dimensions and weights are listed in Table 2. Overall cabinet dimensions are illustrated in Figures 6 through 6B. Cabinet mounting holes are shown in Figures 7 through 7B.

Table 2 – Cabinet Dimensions - 350 HP, 450/600 HP and 1000 HP

HP	A	B	C	D	E	F	Wt.
350	38.0 inch 965 mm	60.0 inch 1524 mm	15.3 inch 389 mm	63.3 inch 1608 mm	17.7 inch 450 mm	.53 inch 13.5 mm	800 lb 364 kg
450/ 600	38.0 inch 965 mm	60.0 inch 1524 mm	15.3 inch 389 mm	63.3 inch 1608 mm	17.7 inch 450 mm	.91 inch 22.3 mm	970 lb 449 kg
1000	64.0 inch 1626 mm	68.9 inch 1750 mm	16.3 inch 414 mm	72.2 inch 1834 mm	18.9 inch 480 mm	1.30 inch 31.9 mm	1700 lb 805

Be sure there is adequate clearance for air ventilation around the cabinet. Allow a minimum clearance for air ventilation around the cabinet. Allow a minimum clearance of 0.3 meters or 1 foot per side.

Attach the cabinet to the CenTraVac® chiller using the 7 mounting holes and 4 slots provided. In order to maintain a flat mounting surface and to ensure that screw tightness is maintained, use a washer and lock washer under the screw heads. Refer to Figures 6 through 6B and Table 2 for cabinet mounting dimensions. Use 3/8" (upper) and 1/2" (lower) mounting screws and washers to attach the cabinet to the chiller. See Table 3 and Figures 7 through 7B for mounting hole locations and dimensions.

Table 3 - Cabinet Mounting Hole Dimensions - 350 HP, 450/600 HP and 1000 HP

HP	G	H	J	K	L	M
350	49.9 inches 1255 mm	3.38 inches 85.9 mm	6.0 inches 152.4 mm	12.4 inches 315 mm	3.0 inches 76.2 mm	26.0 inches 660.4 mm
450/ 600	49.9 inches 1255 mm	3.38 inches 85.9 mm	6.0 inches 152.4 mm	12.4 inches 315 mm	3.0 inches 76.2 mm	26.0 inches 660.4 mm
1000	59.9 inches 1522 mm	5.34 inches 136 mm	4.25 inches 108 mm	11.25 inches 286 mm	4.5 inches 30 mm	26.0 inches 660.4 mm

Figure 6 - Overall Cabinet Dimensions - 350 HP Shown - See Table 2

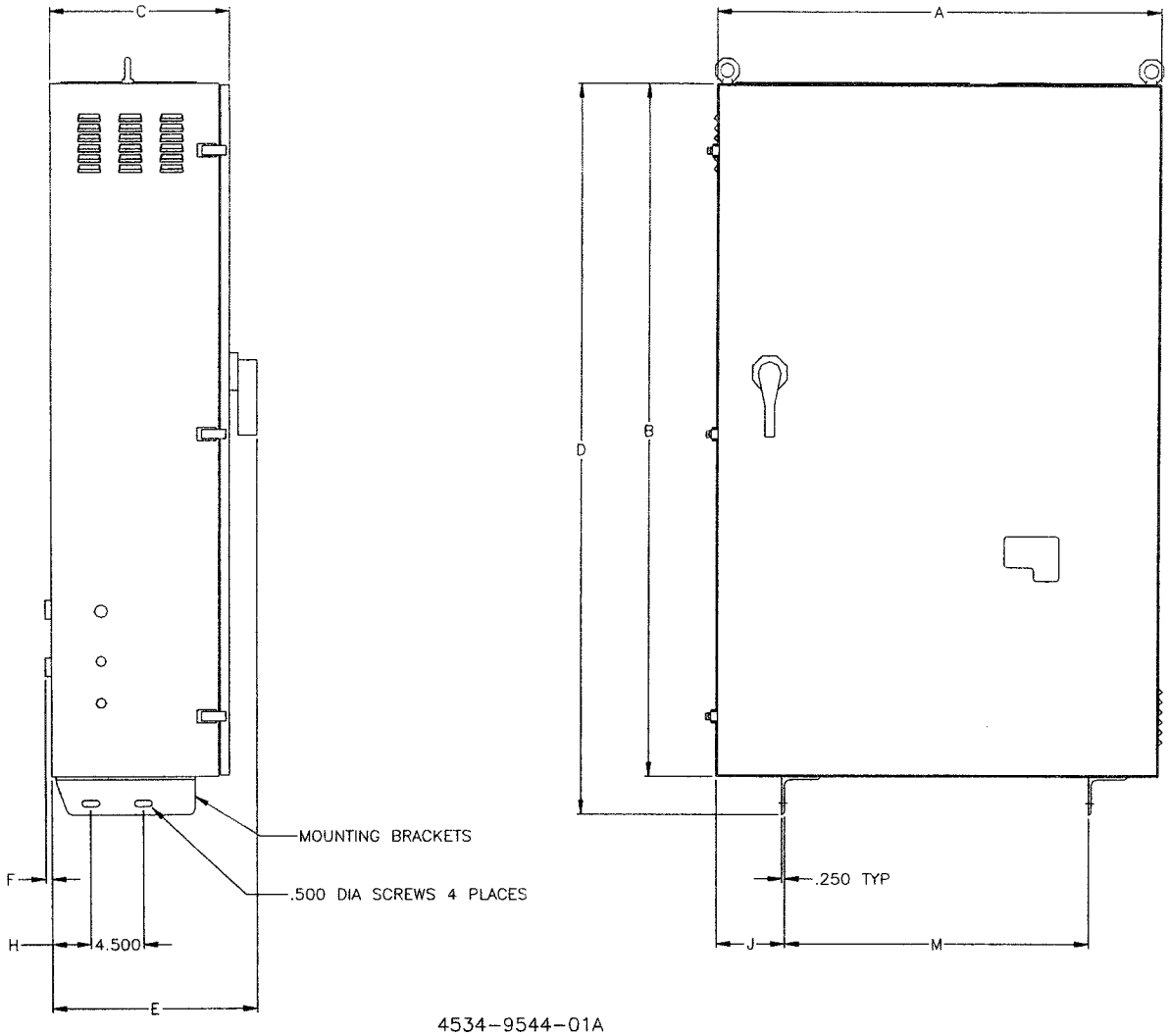

Figure 6A - Overall Cabinet Dimensions - 450/600 HP Shown See Table 2

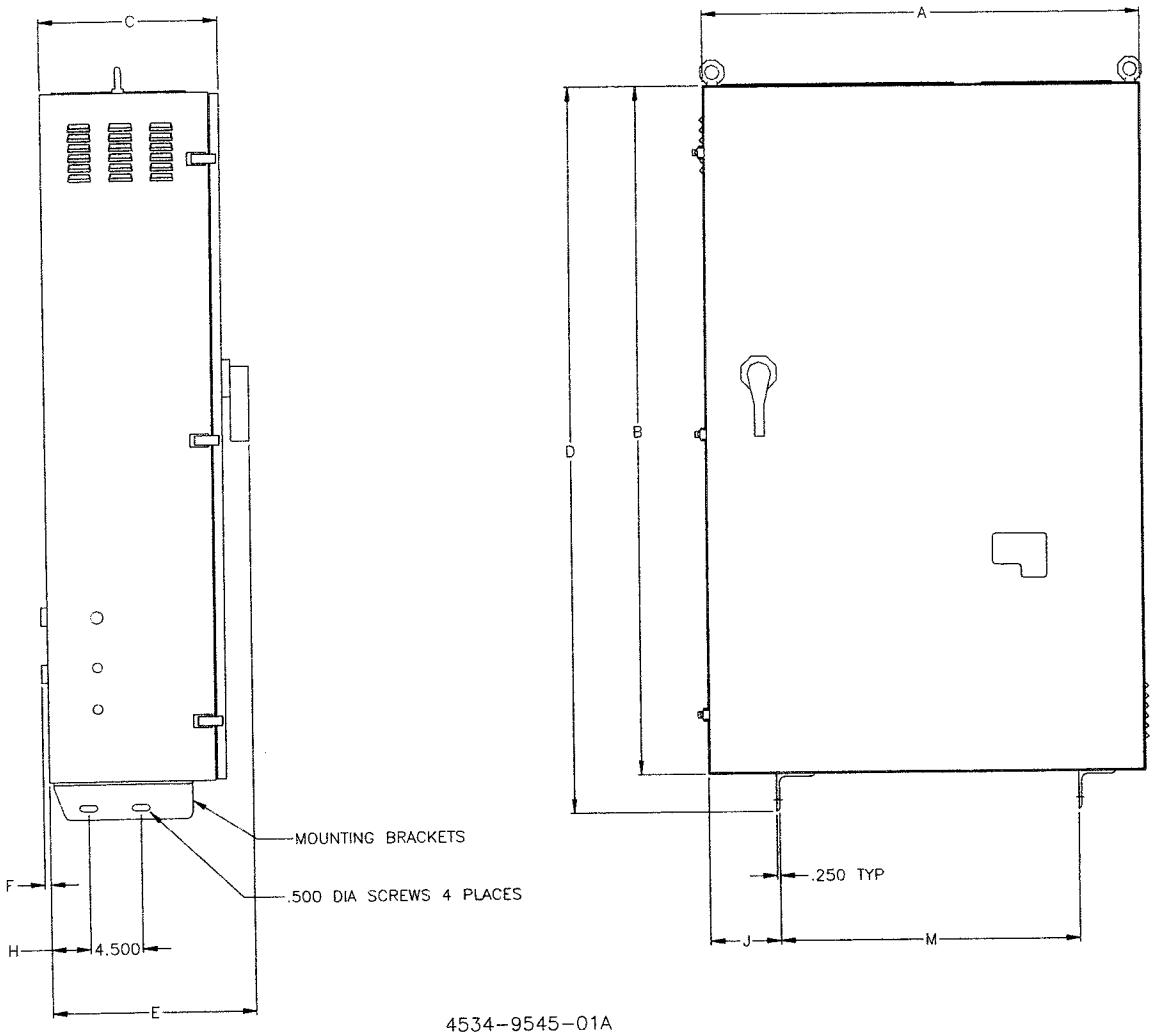

Figure 6B - Overall Cabinet Dimensions - 1000HP

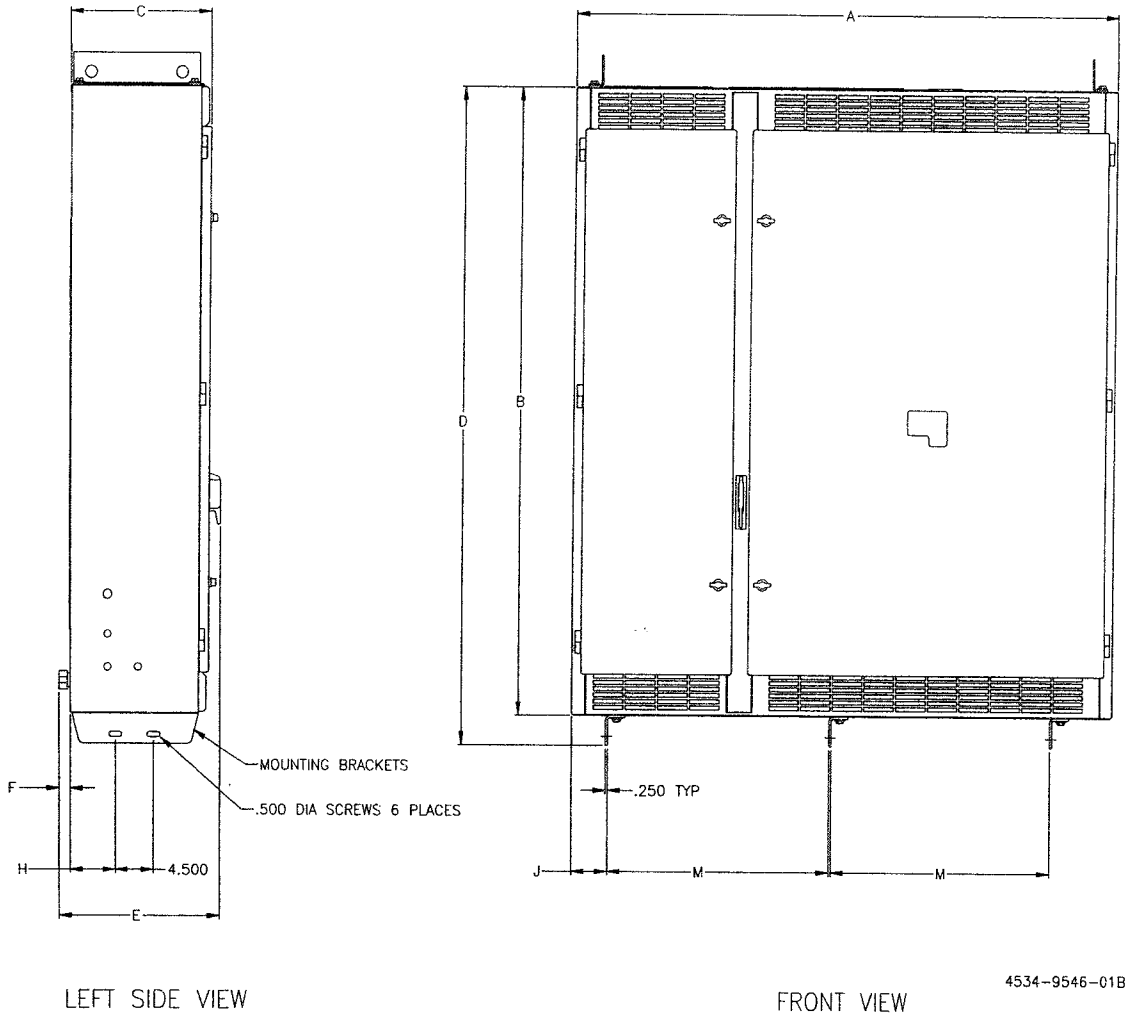

Figure 7 - 350 HP Cabinet Mounting Holes/Slots - (See Table 3)

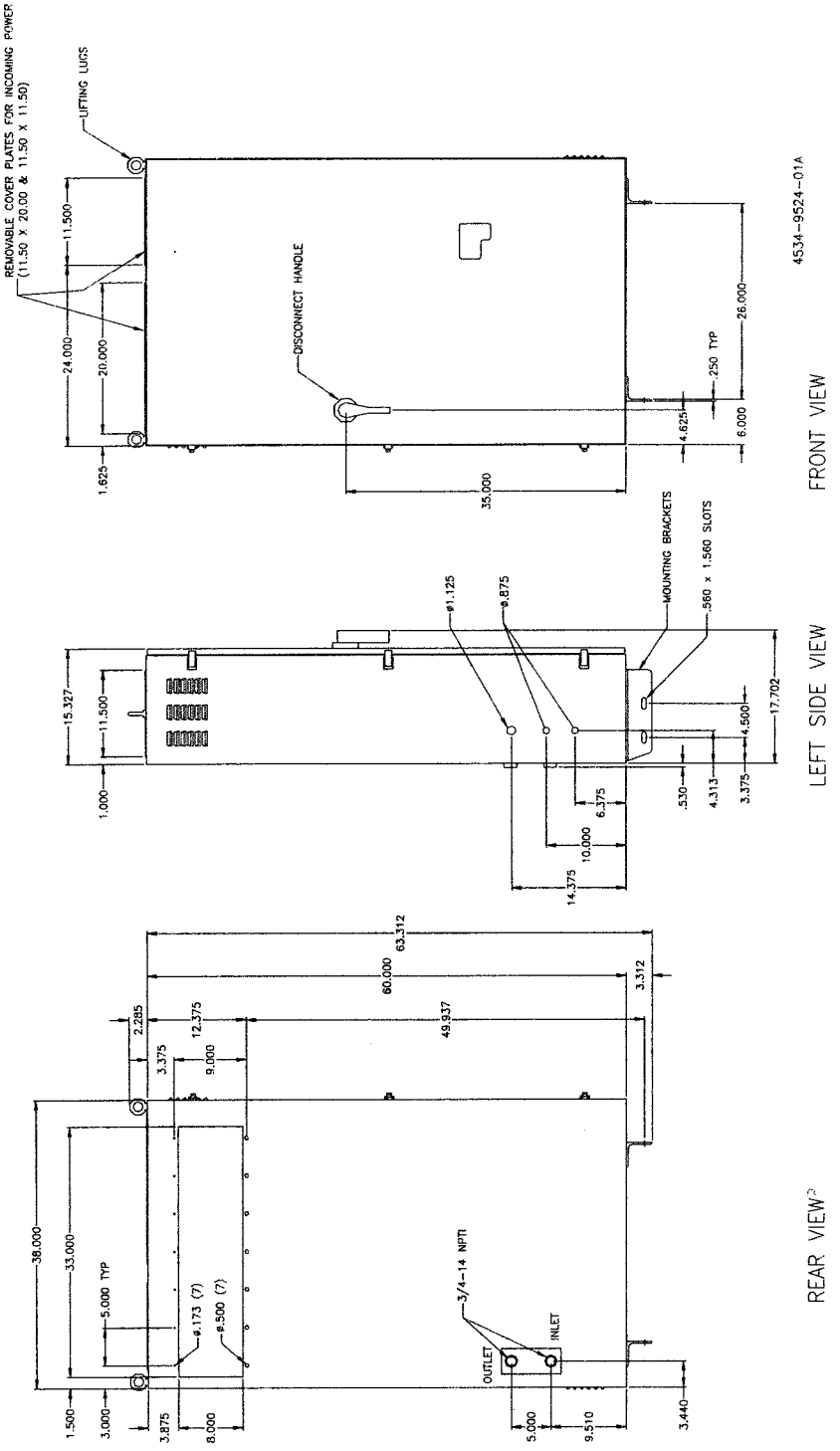

Figure 7A - 450/600 HP Cabinet Mounting Holes/Slots - (See Table 3)

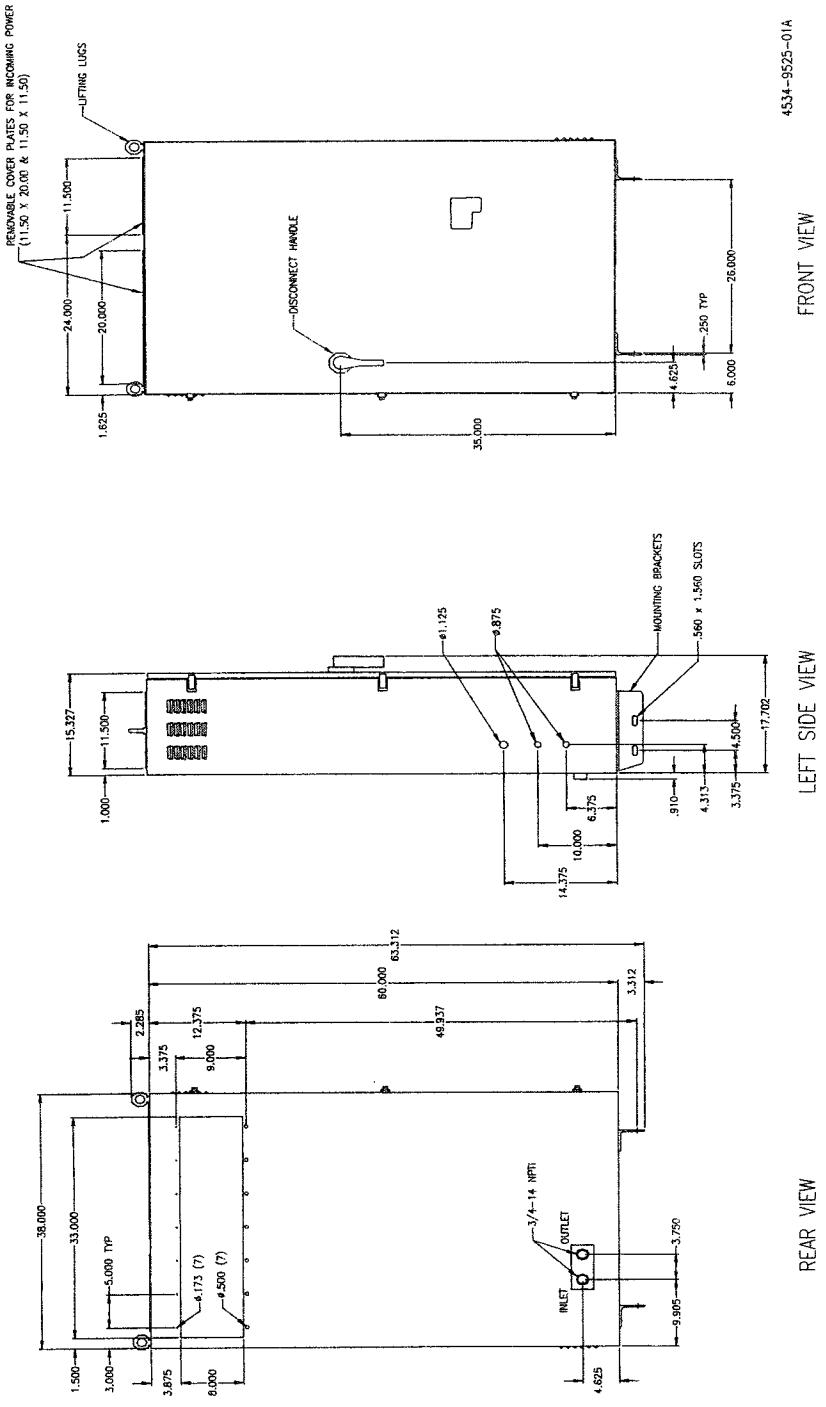

Figure 7B - 1000 HP Cabinet Mounting Holes/Slots - (See Table 3)

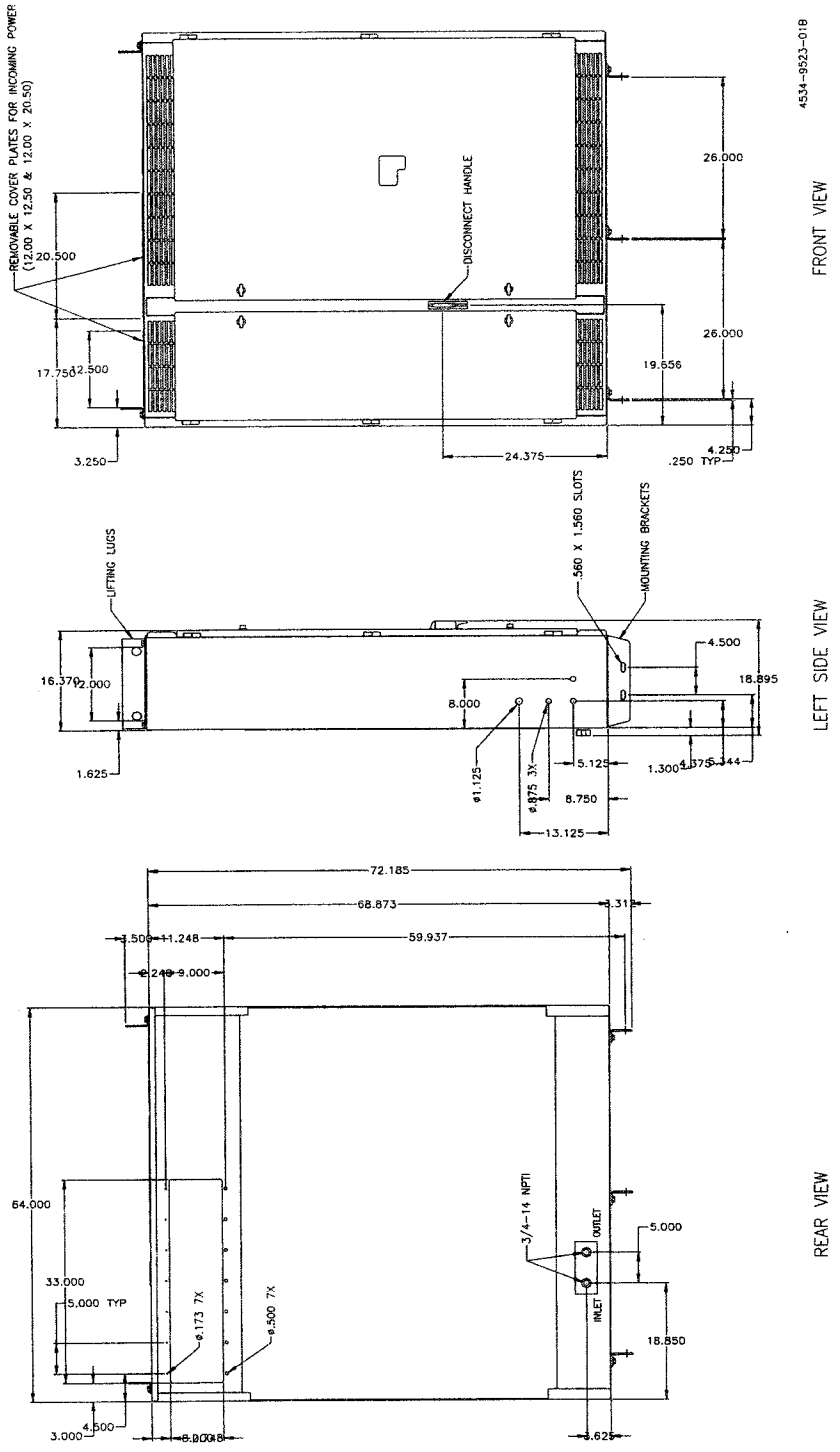

(5) Wire Routing

Wire Sizing

Care should be taken to see that all interconnection wiring and ground wiring is sized and installed in conformance with the National Electrical Code (NEC), the National Fire Protection Association (NFPA), or the Canadian Electrical Code (CEC) as applicable, and other appropriate local codes. Refer to controller and motor nameplates for electrical data.

Grounding

THE MOTOR CONTROLLER HAS A CHASSIS GROUND CONNECTED TO EARTH GROUND. IF YOUR CONTROLLER IS MOUNTED SUCH THAT THE ENCLOSURE IS NOT GROUNDED, A GROUND WIRE MUST BE CONNECTED TO THE ENCLOSURE FOR PERSONNEL SAFETY. THE MOTOR FRAME MUST ALSO BE GROUNDED TO THE DRIVE CONTROLLER.

Refer to submittals for power lug sizes and location along with control wiring specifics for the controller.

Torquing Electrical Power Connections

Utilizing a torque wrench can best control proper tightness of power connections. Since each individual will have a different sense of feel to what is tight, a torque wrench eliminates the human element and provides proper hardware tightening.

Proper torque for connections depends on both the bolting materials and the metals being connected. Both copper and aluminum will flow under prolonged pressure. Flow is greater for aluminum. For this reason, follow up tightening for connected aluminum conductor is even more important than for copper.

Electrical power terminations should be rechecked for tightness when the apparatus is first installed and periodically afterwards. The conductor could flow under prolonged pressure. Thermal cycling will be greater during the first few months in operation. POWER CONNECTIONS SHOULD BE RETORQUED AFTER THE FIRST THREE TO SIX MONTHS OF OPERATION AND ON AN ANNUAL BASIS THEREAFTER.

Most hardware used for making a bolted electrical joint will be low carbon steel. The hardware does not carry electrical current but holds the two conducting surfaces together under pressure. When properly torqued, the slight elongation of the bolt or screw acts to maintain pressure on the electrical joint. The thermal expansion of steel is less than that of the conducting metals which is usually copper or aluminum.

The pressure at the electrical joint will vary slightly during thermal cycling and reduces somewhat when there is cold flow in the conducting metals. Retorquing will reestablish the surface pressure, which is essential to keep a low resistance drop between the two conducting surfaces and thus avoid eventual failure.

(5) Wire Routing

Note: Connection from the AFDB output to the motor is made with flexibar. PROPER TORQUE IS "CRITICAL". See Table 4.

Table 4 - Torque Value for the AFDB Output to Motor Flexibar

Bolt Size	Torque Value
3/8"	30 Foot-Pounds.

Cabinet Wire Routing

All wiring should be installed in conformance with the applicable local, national, and international codes (for example, NEC/CEC). Figures 7 and 8 the wire routing, grounding terminal and power terminal strips of a cabinet. Control wiring enters the cabinet through the three holes on the left side and terminates at the control panel's terminal block. Tighten the control wire connections, 7.1 to 8.9 in-lbs.

Grounding the Cabinet

CAUTION
THE USER IS RESPONSIBLE FOR CONFORMING TO ALL APPLICABLE, LOCAL, NATIONAL, AND INTERNATIONAL CODES. Failure to observe this precaution could result in damage to, or destruction of, the equipment.

USE THE FOLLOWING STEPS TO GROUND THE CABINET:

Step 1. Open the cabinet's door. The grounding stud is located on the left side of the cabinet.

Step 2. Run a suitable grounding conductor unbroken from the cabinet's ground stud to the motor's ground terminal **(completed at factory)** and then to earth ground **(completed by field).** See Figures 8, 8A and 9. The cabinet's ground stud connection point has two 5/16" socket-head screws. Tighten the ground connections to 23-ft lbs.

Step 3. Connect a suitable grounding conductor to the motor frame and the Delta-Wye Transformer (if used). Run each conductor unbroken to earth ground.

Figure 8 – 350 HP and 450/600 HP Cabinet Wire Routing Locations (6-Pulse Rectifier) Standard

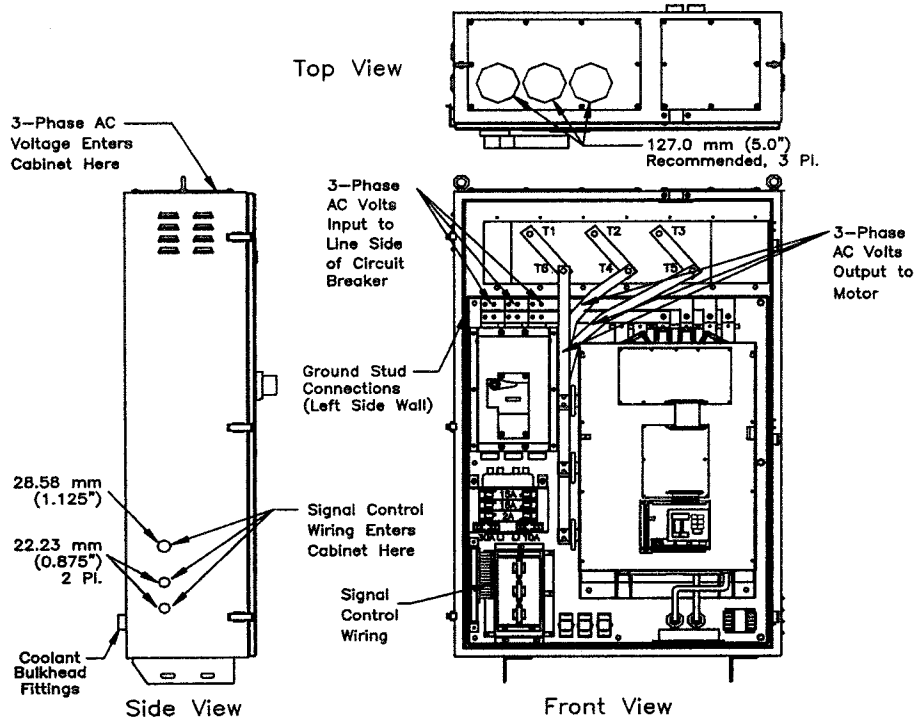

450/600 HP

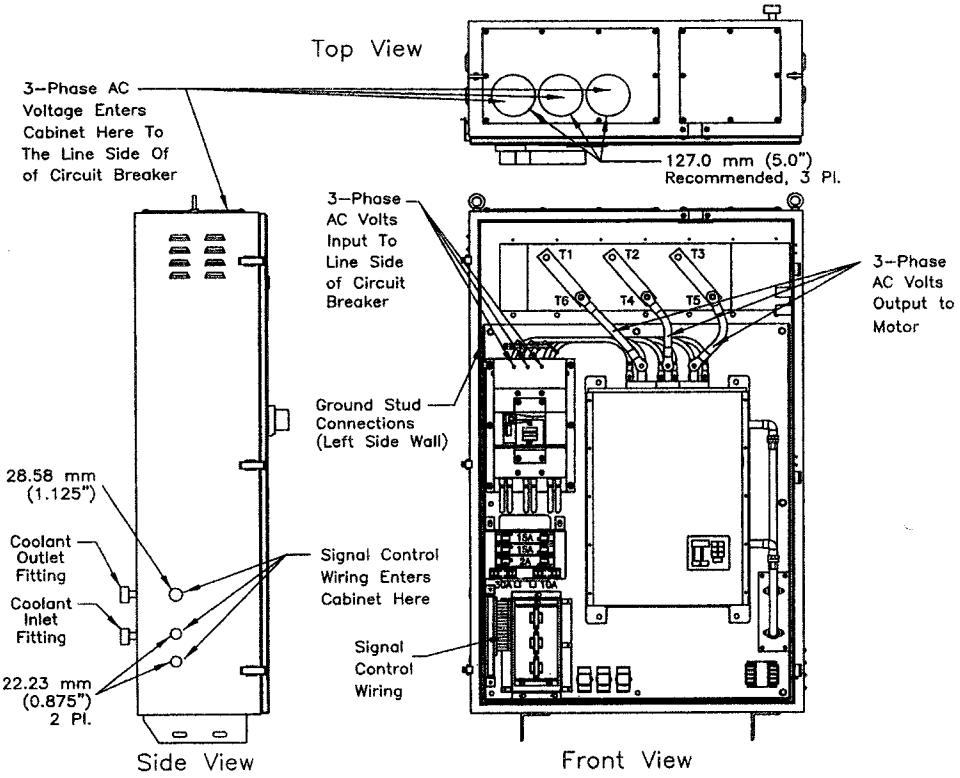

350HP

Figure 8A - 1000 HP Cabinet Wire Routing Locations (6-Pulse Rectifier) Standard

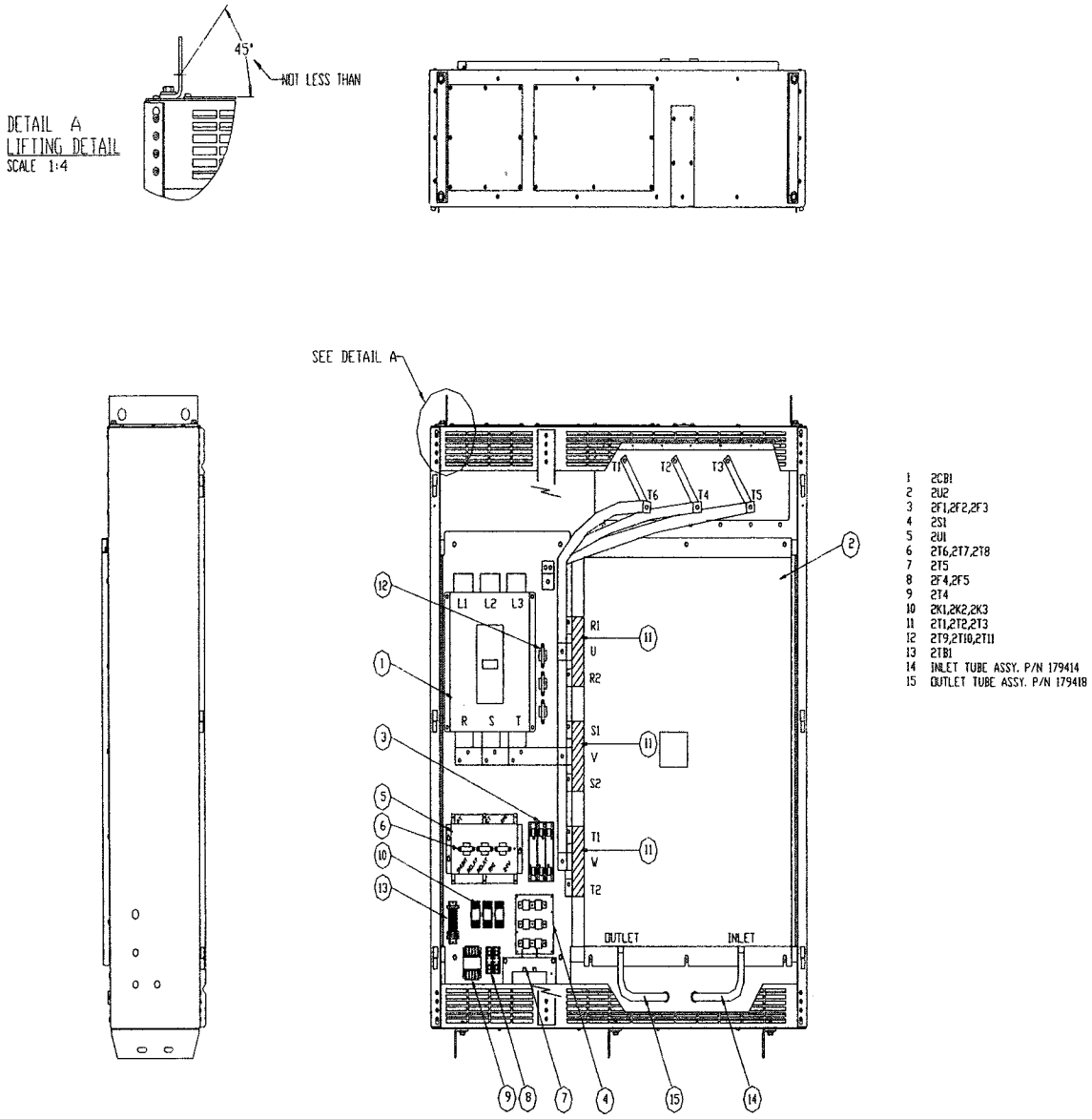

Figure 9 - Cabinet Wire Routing Locations (12-Pulse Rectifier) S12 Isolation Transformer (Harmonic Attenuation)

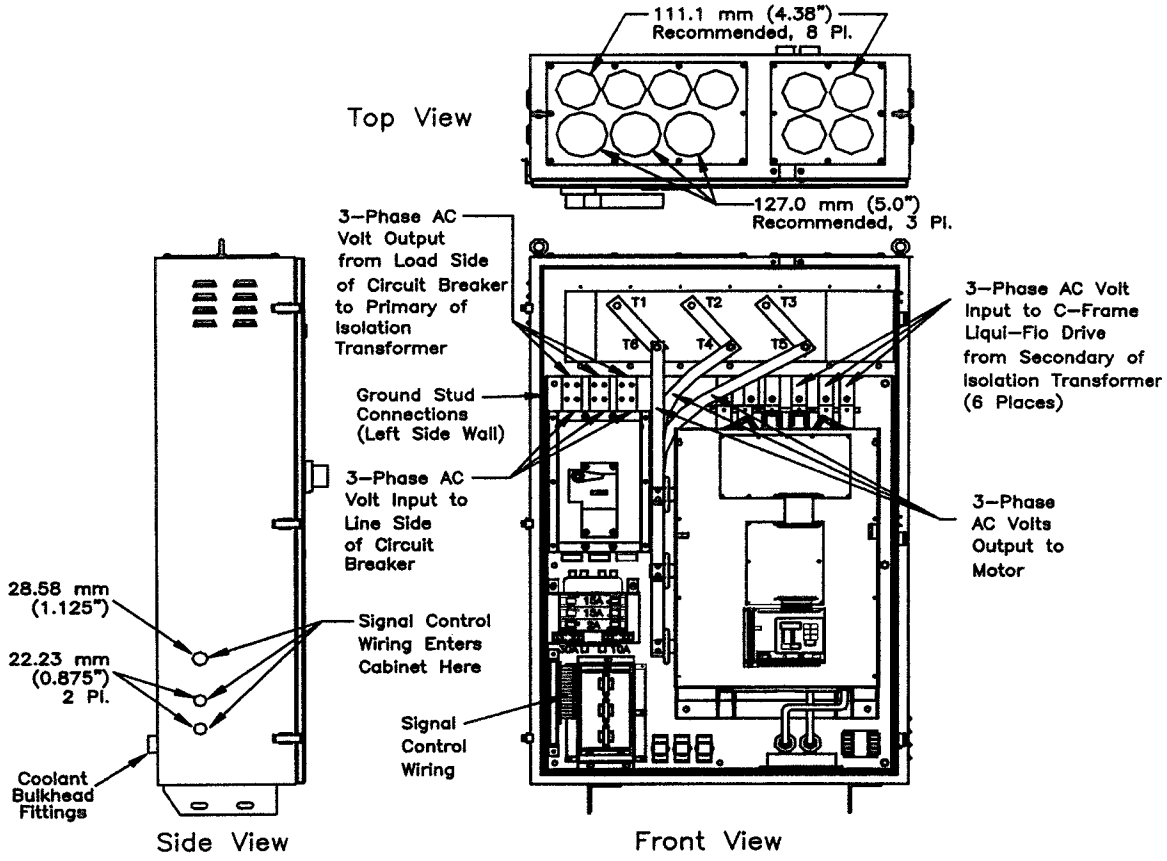

(5) Wire Routing

THIS SECTION DESCRIBES THE CONVERSION PROCESS FROM A 6-PULSE STANDARD TO A 12-PULSE (S12 ISOLATION Transformer)(HARMONIC ATTENUATION.)

Conversion From 6-Pulse (Standard) to 12-Pulse (S12 Isolation Transformer) (Harmonic Attenuation)

Note: The above conversion process not available on 1000 Drive.

110 inches-pounds
See Figure 10 showing Diagram of 6 Pulse – 12 Pulse Conversion.

1. Remove Bussbar from Drive:

A. Remove and save two M8 screws, one M8 Nut and associated hardware from the Jumper bussbar P/N 179038.

B. Remove and save three M8 Nuts and associated hardware from the Bridge bussbar P/N 179039.

2. Reinstall Jumper Bussbar on Drive:

A. Rotate by 180° Jumper bussbar P/N 179038 and reinstall on DC+ Interlink bussbar P/N 179036 and on Reactor P/N 179000, Terminal 2.

B. Reinstall M8 Hardware. Tightening torque is 90 to 110 inches-pounds.

3. Reinstall Bridge Bussbar on Drive:

A. Reinstall Bridge Bussbar P/N 179039 to the Upper Set of Studs on DC+ Angle Bussbar P/N 179033 and on Reactor P/N 179000, Terminal 1.

B. Reinstall M8 Hardware. Tightening torque is 90 to 110 inches-pounds.

Conversion From 12-Pulse To 6-Pulse Is The Opposite Of This Procedure.

Figure 10 – 6 Pulse – 12 Pulse Conversion

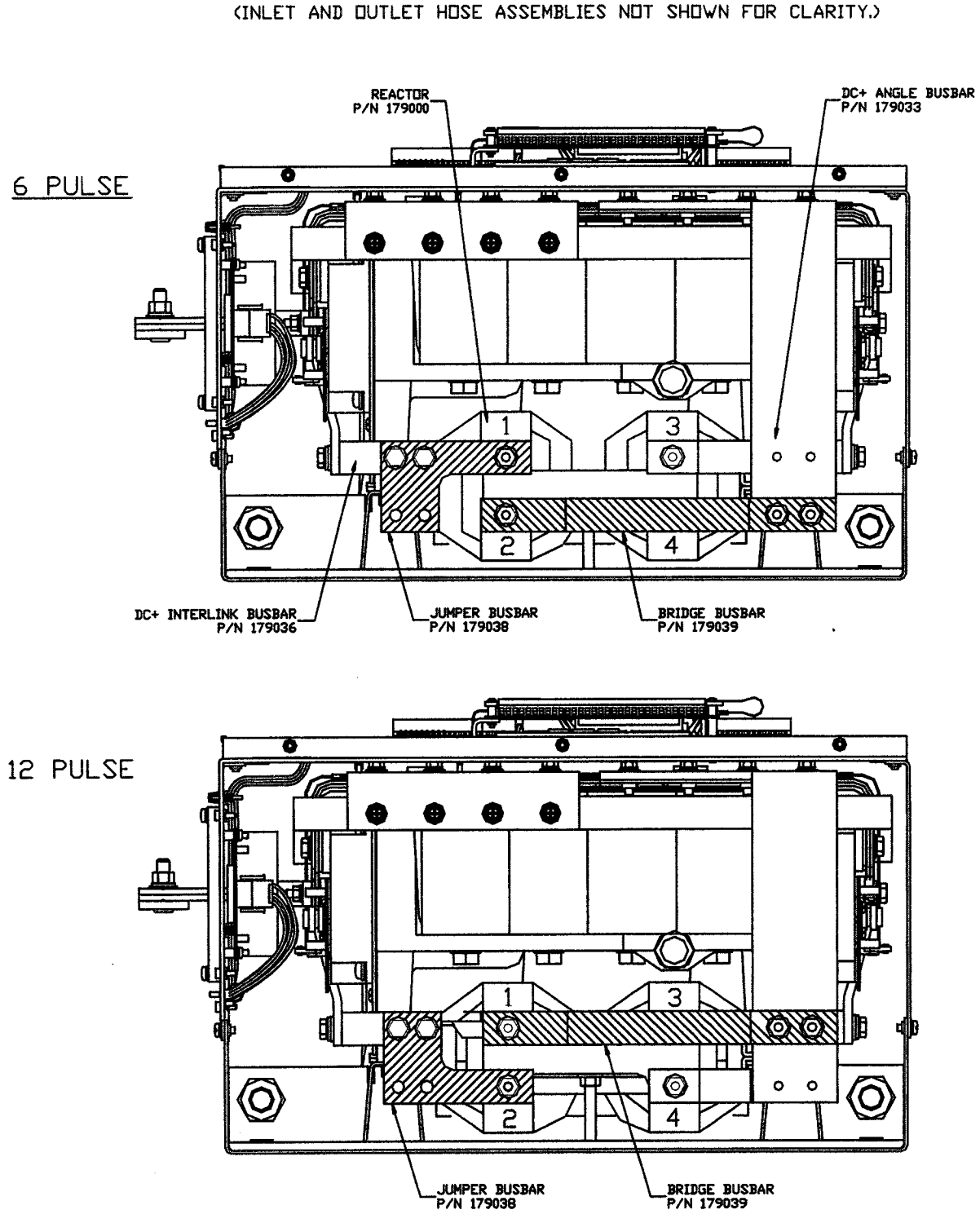

(6) Connecting Power Wiring

THIS SECTION DESCRIBES THE INPUT AND OUTPUT POWER TO THE CABINET.

Cabinet Input Disconnect

⚠ WARNING
THE USER IS RESPONSIBLE FOR CONFORMING TO ALL APPLICABLE LOCAL, NATIONAL, AND INTERNATIONAL CODES. Failure to observe this precaution could result in damage to, or destruction of, the equipment.

An input disconnect circuit breaker is factory-installed in the cabinet. Verify that the available fault is less than the interrupting rating on the circuit breaker nameplate, which are 65,000 amps at 480 VAC.

Installing Input Power Wiring (6-Pulse Rectifier) Standard Cabinet

⚠ WARNING
THE USER IS RESPONSIBLE FOR CONFORMING TO ALL APPLICABLE LOCAL, NATIONAL, AND INTERNATIONAL CODES. Failure to observe this precaution could result in damage to, or destruction of, the equipment.

Use the following steps to connect AC input power to the cabinet:

Step 1. Remove the top panel of the cabinet.

IMPORTANT: *Care must be taken to prevent debris from falling into the cabinet while performing this installation.*

Step 2. Drill the wire routing holes in the panel. Note that the wire routing hole patterns shown in Figure 8 are recommendations only. These wire routing holes are the only entry points for input power wiring into the cabinet.

Step 3. Install the appropriate conduit hubs.

Step 4. Reinstall the cabinet's top panel.

Step 5. Connect the three-phase 480 VAC input power leads to circuit breaker terminals L1, L2, and L3. See Figure 11. Tighten these connections to 30 foot-pound. Use only copper-conductors for the input power leads.

Figure 11 - Trane Cabinet Electrical Connections (6-Pulse Rectifier) Standard

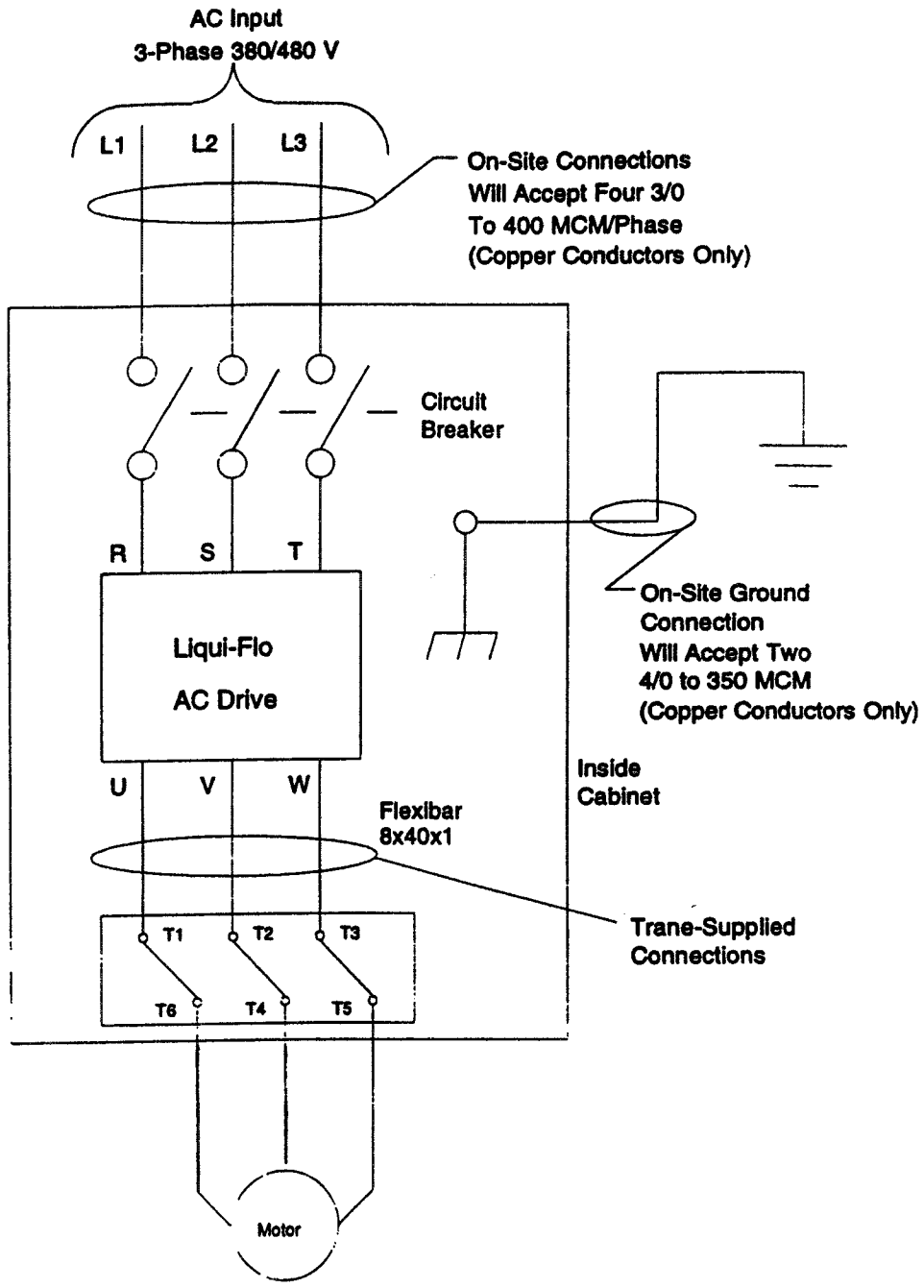

(6) Connecting Power Wiring

Installing Input Power Wiring (12-Pulse Rectifier Cabinet) S12 Isolation Transformer (Harmonic Attenuation)

⚠ WARNING
THE USER IS RESPONSIBLE FOR CONFORMING TO ALL APPLICABLE LOCAL, NATIONAL, AND INTERNATIONAL CODES. Failure to observe this precaution could result in damage to, or destruction of, the equipment.

Use the following steps to connect AC input power to the cabinet:

Step 1. Remove the top panel of the cabinet.

IMPORTANT: *Care must be taken to prevent debris from falling into the cabinet while performing this installation.*

Step 2. Drill the wire routing holes in the panel. Note that the wire routing hole patterns shown in Figure 9 are recommendations only. These wire routing holes are the only entry points for input power wiring into the cabinet.

Step 3. Install the appropriate conduit hubs.

Step 4. Reinstall the cabinet's top panel.

Step 5. Connect the three-phase 480 VAC input power leads to circuit breaker terminals L1, L2, and L3. See Figure 12. Tighten these connections to 30 ft-lb. Use only copper-conductor for the input power leads.

Step 6. Twelve-pulse cabinets require an Isolation Transformer be installed external to the cabinet. Install the Trane-specified transformer by following the installation instructions supplied with it.

Step 7. Connect the load side of the circuit breaker to the R, S, and Terminals on the Isolation Transformer. Tighten these connections to 30 ft-lb.

Step 8. Connect the load side of the Isolation Transformer to the S1 through S6 terminals on the AFDB drive. Tighten these connections to 30 ft-lb.

(6) Connecting Power Wiring

Figure 12 - Trane Cabinet Electrical Connections (12-Pulse Rectifier) Isolation Transformer (Harmonic Attenuation)

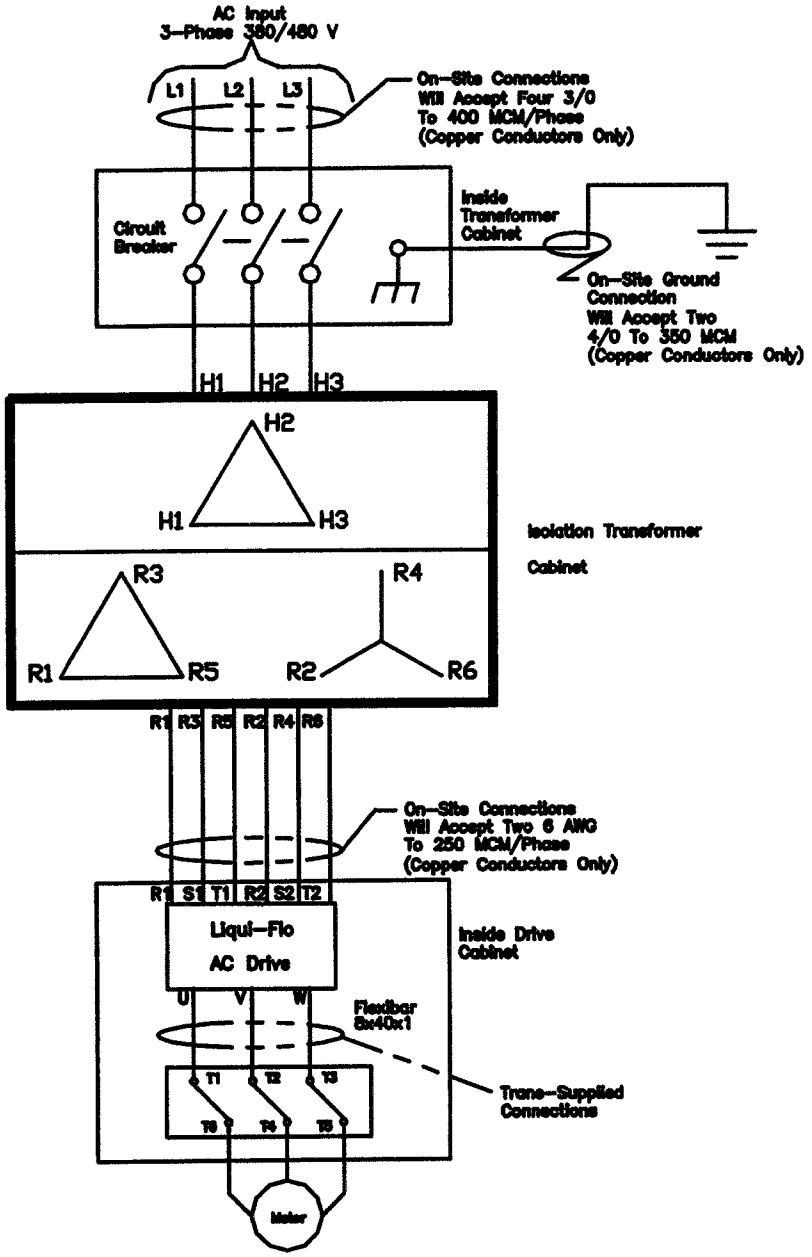

(6) Connecting Power Wiring

Installing Output Power Wiring (Completed by Trane on Unit Mounted Drives)

⚠ WARNING
THE USER IS RESPONSIBLE FOR CONFORMING TO ALL APPLICABLE LOCAL, NATIONAL, AND INTERNATIONAL CODES. Failure to observe this precaution could result in damage to, or destruction of, the equipment.

Use the following steps to connect the cabinet's output power wiring from the drive to the chiller motor:

Step 1. Connect the Trane-supplied Flexibar (8 x 40 x 1) conductors to the drive's U, V, W output terminals using the Trane-supplied hardware. See Figures 8, 9, 11 and 12.

Step 2. Tighten these connections to Trane specifications.

Step 3. Connect the Flexibar conductors to the T1, T2, and T3 motor connection studs using the Trane-supplied hardware. See Figures 8, 9, 11 and 12.

Step 4. Tighten these connections to Trane specifications. Refer to Table 5.

Regulator Board Wiring

The cabinet's start/stop wiring on the Regulator board's terminal strip is factory-wired as shown in the wiring diagram.

(7) Liquid Cooling Connections

Liquid-Cooling Connections (Factory Connected on Unit Mounted Drives)

External coolant lines connect to the cabinet through two bulkhead fittings. The bulkhead fittings are located on the rear panel of the cabinet as shown in Figure 13. If you have removed the liquid cooling lines for field disassembly when repairing. Use the following steps to connect the coolant lines to the cabinet:

Step 1. Be sure the threads of the bulkhead fittings and the CenTraVac® chiller's tubing connectors are free of dirt, burrs, and excessive nicks.

Step 2. Place two layers of Teflon Pipe Sealant on the threads of the CenTraVac chiller's tubing connectors. More than two layers of sealant may distort or crack the bulkhead fitting. Screw the connectors into the cabinet's bulkhead fittings until they are finger-tight. See Figure 14.

Step 3. Use a wrench to further tighten the connectors 1.5 to 2.5 turns. Do not hold the bulkhead fitting with a pipe wrench when tightening the connectors as the fitting may be damaged. The bulkhead fitting has a built-in anti-rotation feature and will not turn as the connector is screwed in.

CAUTION
THE CABINET'S BULKHEAD FITTINGS MAY BE DAMAGED IF THEY ARE HELD WITH A PIPE WRENCH. DO NOT HOLD THE BULKHEAD FITTING WITH A PIPE WRENCH. THE BULKHEAD FITTING HAS A BUILT-IN ANTI-ROTATION FEATURE AND WILL NOT TURN AS THE CONNECTOR IS SCREWED IN. Failure to observe this precaution could result in damage to, or destruction of the equipment.

Step 4. Check the connections for leaks.

(7) Liquid Cooling Connections

Figure 13 – Liquid Cooling Bulkhead Fittings - Rear View Shown

HP

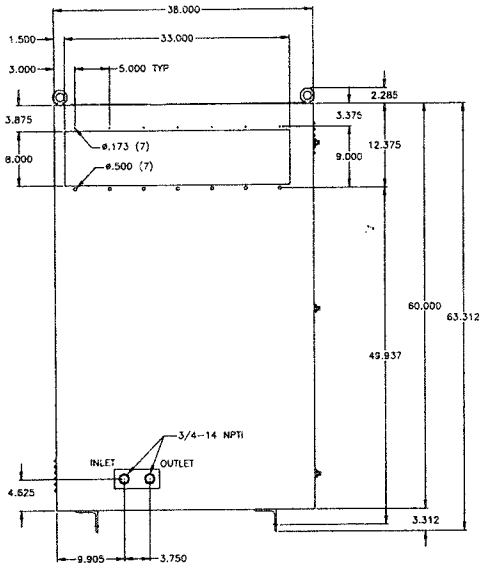

REAR VIEW

4534-9525-01A

350 HP

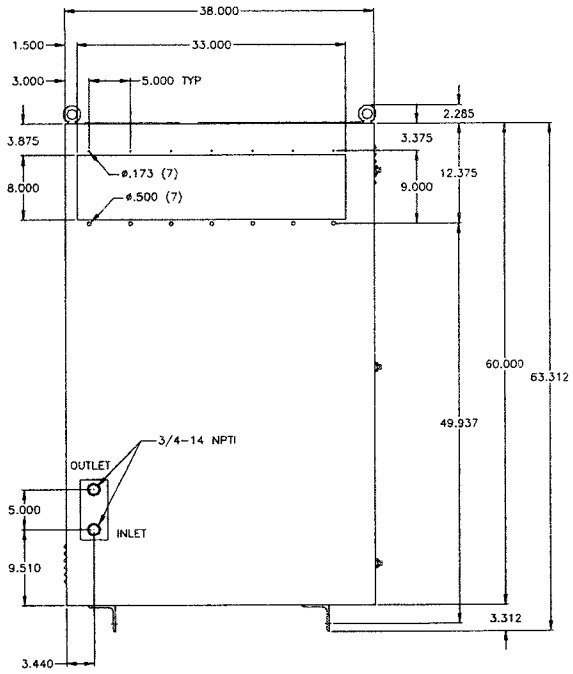

1000 HP

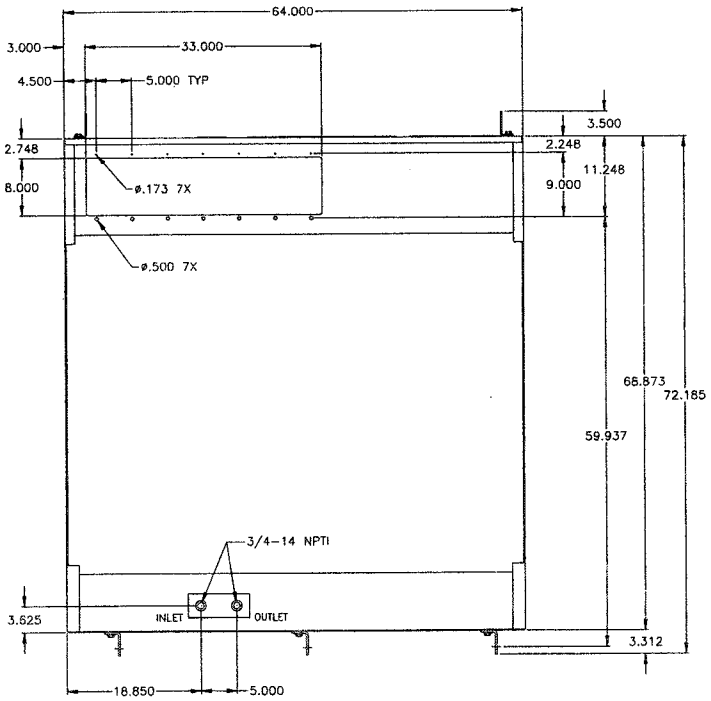

Figure 14 - Liquid Cooling Connections

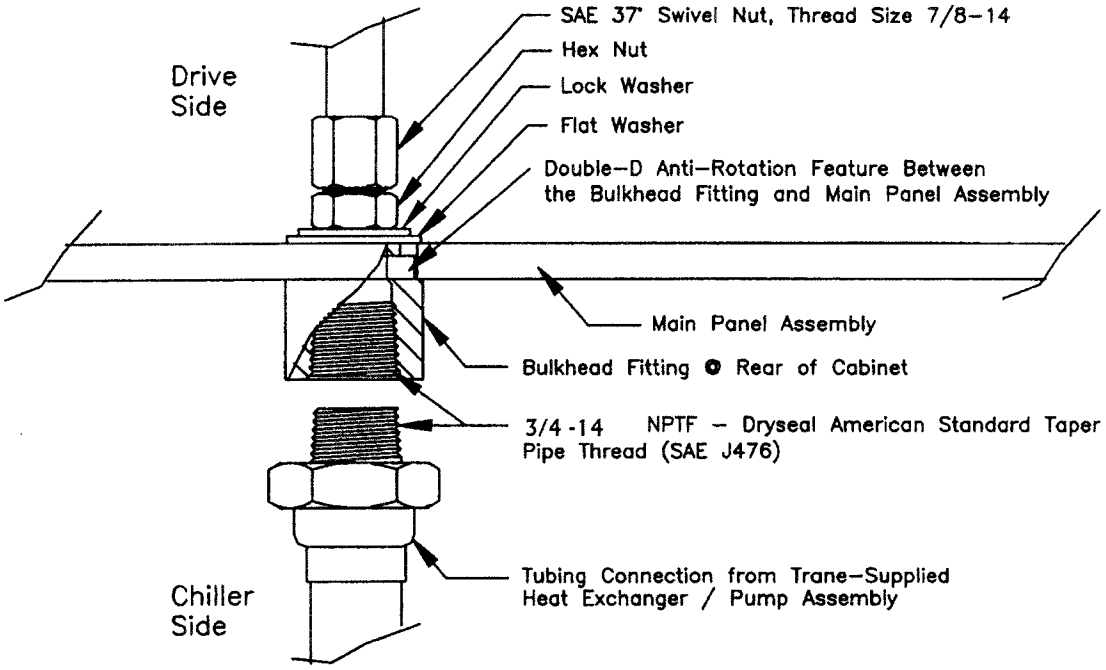

THIS SECTION DESCRIBES HOW TO REMOVE THE AFDB DRIVE FROM THE CABINET AND PROVIDES A LIST OF REPLACEMENT PARTS.

Follow the procedures below if you are removing a AFDB drive from a 6-pulse (Standard) rectifier cabinet or a AFDB drive from a 12-pulse rectifier (S12 Isolation Transformer) (Harmonic Attenuation) cabinet.

REMOVING THE DRIVE FROM A 6-PULSE RECTIFIER (STANDARD) CABINET

USE THE FOLLOWING PROCEDURE TO REMOVE A AFDB DRIVE FROM A 6-PULSE RECTIFIER CABINET:

⚠ WARNING

DC BUS CAPACITORS RETAIN HAZARDOUS VOLTAGES AFTER INPUT POWER HAS BEEN DISCONNECTED. AFTER DISCONNECTING INPUT POWER, WAIT TEN (10) MINUTES FOR THE DC CAPACITORS TO DISCHARGE AND THEN CHECK THE VOLTAGE WITH A VOLTMETER TO ENSURE THE DC BUS CAPACITORS ARE DISCHARGED BEFORE TOUCHING ANY INTERNAL COMPONENTS. Failure to observe this precaution could result in severe bodily injury or loss of life.

Step 1. Turn off and lock out AC input power to the cabinet.

Step 2. Place the circuit breaker in the Off position. Wait 10 minutes.

Step 3. Verify that there is no voltage at the drive's input power terminals.

Step 4. Check the DC bus potential with a voltmeter to ensure that the DC bus capacitors are discharged.

Step 5. Drain the drive's coolant and disconnect the coolant lines.

a. Use a ball valve at the inlet connection to drain the coolant while running the pump for 1 to 2 minutes.

b. Connect one end of a drain hose to the accumulator on the closed loop coolant system.
Connect the other end of the hose to a drain.

c. Connect a shop air line to the closed loop coolant system at the quick disconnect fitting.
Pressurize the line to 60-90 PSI for 1 to 2 minutes to flush all of the coolant out of the drive.

d. Remove the basket from the Y-strainer and check for any debris.

e. From inside the cabinet, disconnect the coolant lines from the panel using a 1-1/16" wrench on the swivel nut connected to the bulkhead fitting. A crow's foot wrench is recommended. Verify that no residual coolant remains in the drive.

Step 6. Disconnect the Flexibar conductors at the drive's U, V, and W output terminals.

a. Remove the two 3/8"-16-UNC-2B nuts from the clamp holding the Flexibar to the AC output busbar at output terminals U, V, and W.

b. Remove the load plate and the clamps.

c. Save this hardware for reassembly.

Step 7. Remove the rigid buswork that connects the load side of the circuit breaker to the drive.

a. Remove the 1/12"-13 bolts and washers from each of the drive's AC input input terminals (L1 through L6).

b. Remove the two 3/8"-16 bolts, washers and nuts from each of the six circuit breaker input busbar connections.

c. Save this hardware for reassembly.

Step 8. Disconnect the 12-position terminal connection located on the lower left side of the drive. Cut the wire tie on the wire mounting base leading to the panel.

Step 9. Disconnect the leads from each of the three current transformers (CTs). Wrap the CT leads around the AC output busbar to keep them from being damaged. Cut the wire ties on the wire mounting bases.

Step 10. Disconnect the AC busbar support from the AC input busbar.

a. Remove the six M5 hex screws that connect the AC input busbar (L1 through L6) to the busbar support.

b. Save this hardware for reassembly.

Step 11. Remove the removable plate and wire entry panels. See Figure 1.

a. Remove the four 1/4" screws and washers from the upper-right corner of the cabinet that hold the removable plate in place. Remove the removable plate, which will expose a 2" gap in the lip of the cabinet.

b. Remove the eight 1/4" screws that hold the wire entry panel to the top of the cabinet.

c. Save the panels and hardware for reassembly.

Step 12. Install two eyebolts into the drive to serve as lifting points.

a. Two 3/4" nuts are welded to the drive's baseplate. Screw the eyebolts (recommended: 2" eye I.D., 6" long shank) into the nuts.

b. Connect 18" (nominal) of chain between the eyes, securing them with a clevis clamp.

Step 13. Using an overhead or portable hoist (minimum 1/2 ton rated capacity), bring a free-fall chain into the cabinet through the access panel and the wire entry panel.

Step 14. Attach the free-fall chain to the chain secured to the eyebolts. Take up any vertical slack in the chain.

Step 15. Remove the four 1/2" bolts that secure the baseplate of the drive to the cabinet. Save this hardware for reassembly.

Step 16. Using the hoist, lift the drive slightly to take the load off of the cabinet's panel studs. Pull the drive off of the studs and up through the wire entry and access panels until it is clear of the cabinet enclosure. Note that drive's center of gravity is forward of the hoist, which will result in the top of the drive titling forward during removal.

Step 17. Move the drive to a horizontal pallet for servicing or shipment. The eyebolts and the chain between them do not need to be removed.

Step 18. Reinstall the drive by following steps 17 to 1 in reverse order.

a. During reinstallation, tighten the hardware to the torque values shown in Table 5.

b. Visually inspect the insulation of the wiring and bus work to ensure that it was not damaged.

c. Refill the drive with coolant.

Step 19. Test the drive for proper operation by following the startup procedures in instruction manual D2-3410.

Table 5 - Hardware Tightening Torque

Hardware	Maximum Recommended Tightening Torque
1/4" – 20 UNC Screws	75 In-Lb.
1/2" – 13 UNC - 2B Nut	45 Ft-Lb.
3/8" – 16 UNC – 2B Nut	19 Ft-Lb.
IO Terminal Block Screws	4.5 In-Lb.

REMOVING THE DRIVE FROM A 12-PULSE RECTIFIER ISOLATION TRANSFORMER (HARMONIC ATTENUATION) CABINET

USE THE FOLLOWING PROCEDURE TO REMOVE A AFDB DRIVE FROM A 12-PULSE RECTIFIER ISOLATION TRANSFORMER (HARMONIC ATTENUATION) CABINET:

⚠ WARNING

DC BUS CAPACITORS RETAIN HAZARDOUS VOLTAGES AFTER INPUT POWER HAS BEEN DISCONNECTED. AFTER DISCONNECTING INPUT POWER, WAIT TEN (10) MINUTES FOR THE DC CAPACITORS TO DISCHARGE AND THEN CHECK THE VOLTAGE WITH A VOLTMETER TO ENSURE THE DC BUS CAPACITORS ARE DISCHARGED BEFORE TOUCHING ANY INTERNAL COMPONENTS. Failure to observe this precaution could result in severe bodily injury or loss of life.

Step 1. Turn off and lock out AC input power to the cabinet.

Step 2. Place the circuit breaker in the Off position. Wait 10 minutes.

Step 3. Verify that there is no voltage at the drive's input power terminals.

Step 4. Check the DC bus potential with a voltmeter to ensure that the DC bus capacitors are discharged.

Step 5. Drain the drive's coolant and disconnect the coolant lines.

a. Use a ball valve at the inlet connection to drain the coolant while running the pump for 1 to 2 minutes.

b. Connect one end of the drain hose to the accumulator on the closed loop coolant system. Connect the other end of the hose to a drain.

c. Connect a shop air line to the closed loop coolant system at the quick disconnect fitting. Pressurize the line to 60-90 PSI for 1 to 2 minutes to flush all of the coolant out of the drive.

d. Remove the basket from the Y-strainer and check for any debris.

e. From inside the cabinet, disconnect the coolant lines from the panel using a 1-1/16" wrench on the swivel nut connected to the bulkhead fitting. A crow's-foot wrench is recommended. Verify that no residual coolant remains in the drive.

Step 6. Disconnect the Flexibar conductors at the drive's U, V, and W output.

a. Remove the two 3/8"-16-UNC-2B bolts and washers from the clamp holding the Flexibar to the AC output busbar at output terminals U, V, and W.

b. Remove the load plate and the clamps.

c. Save this hardware for reassembly.

Step 7. Disconnect the AC input wiring at the drive's AC input terminals (L1 through L6) and at the circuit breaker's line and load terminals.

a. Loosen all of the pressure lugs.

b. Bend the individual wires vertically within the cabinet.

Step 8. Disconnect the 12-position terminal connection located on the lower left side of the drive. Cut the wire tie on the wire mounting base leading to the panel.

Step 9. Disconnect the leads from each of the three current transformers (CTs). Wrap the CT leads around the AC output busbar to keep them from being damaged. Cut the wire ties on the wire mounting bases.

Step 10 Remove the removable plate. See Figure 3.

a. Remove the four 1/4" screws and washers from the upper-right corner of the cabinet that hold the removable plate in place. Remove the removable plate which will expose a 2" gap in the lip of the cabinet.

b. Save the panel and hardware for reassembly.

Step 11. Place the lifting support bar in the cabinet's stainless steel C-channel brackets. The support bar's pipe support should face you.

a. Screw two 3/4" screws through the pipe support into the 3/4" nuts, which are welded to the drive's baseplate.

b. Hand tighten the screws.

Step 12. Remove the four 1/2" nuts and washers that secure the drive's baseplate to the cabinet. Save the hardware for reassembly.

Step 13. Tighten the two 3/4" screws to remove the load on the baseplate. Slide the support bar along the C-channel brackets until it reaches the cabinet's front seal lip.

Step 14. Using an overhead or portable hoist (minimum 1/2 ton rated capacity), attach a free-fall chain to the 1.5" hole in the support bar. Take up any vertical slack in the chain.

Step 15. Vertically lift the support bar and the drive 3" to 4".

a. Rotate the support bar to the right side, towards you, and slip the support bar/drive assembly out of the cabinet.

Step 16. Move the drive to a horizontal pallet for servicing or shipment. The support bar and screws do not need to be removed.

Step 17. Reinstall the drive by following steps 16 to 1 in reverse order.

a. During reinstallation, tighten the hardware to the torque values (± 10) shown in Table 5.

b. Visually inspect the insulation of the wiring and bus work to ensure that it was not damaged.

c. Refill the drive with coolant.

Step 18. Test the drive for proper operation by following the start-up procedures in instruction manual D2-3410.

(9) UCP2-Parameter Information

Control and Logic Discussion

Variable speed impeller control is used to improve CenTraVac® efficiency at part load. This occurs because the chiller's inlet guide vanes (IGVs) open further than a constant speed machine to compensate for capacity reductions associated with impeller speed decreases. Increased IGV opening reduces the vane's aerodynamic losses, which increases chiller efficiency. This approach allows the chiller to run more efficiently as well as close to the operating condition known as surge. A surge occurs when the compressor can no longer support the differential pressure required between the evaporator and condenser. This transitory pressure breakdown between the high and low side results in an audible noise.

The UCP2 control of the vanes and impellers has two control priorities. The highest control priority is to maintain the chilled water set point. The second priority attempts to optimize unit efficiency by operating the compressor's impellers at the lowest speed possible while avoiding surge. If a surge is detected, an adaptable surge avoidance routine makes adjustments to move away from and to avoid surge at similar conditions in the future.

Install and Enable

Table 6 lists all the parameters that must be reviewed prior to start-up. These parameters are set from the factory, but may need to be changed based on module replacement or desire of customer to allow more aggressive optimization. Following the table is a more detailed description followed by several examples.

Table 6 - List of All UCP2 Parameters

Parameter Name	Default	Proper Setting
Starter Type	Y-Delta	AFDB
Condenser Pressure Sensor Option	Not Installed	Installed
AF Adjustable Speed Control Algorithm Enable	Enable	See Note 1
AF Leaving Water Standard Deviation	1.0	See Note 1
AF Pressure Coefficient Constant	800	See Note 2
AF Re-optimization Factor	0.30	See Note 1
AF Re-optimization Timer	24	See Note 1
AF Boundary Pressure Coefficient Y Intercept	0.40	See Note 1
AF Boundary Pressure Coefficient Y Intercept Maximum	2.00	See Note 1
AF Pressure Error Deadband	0.030	See Note 1
AF Proportional Speed Gain	50	See Note 1

Note: 1. Default is acceptable. Change only as necessary. Refer to examples.
2. This value must be calculated. Refer to next page.

(9) UCP2-Parameter Information

The following descriptions give detailed explanations for the parameters and their adjustment. This should only be changed by a qualified service technician. To get the AFDB control option to function it must first be installed. To install the AFDB control press the Service Settings key and then the Previous key to get to the Machine Configuration Group. **To enter the Machine Configuration Group** type the password keystroke combination of

+ - + - + - followed by the <Enter> key. In this group make sure to do the following:

- **Verify the starter type is set to AFDB.**
- **Verify the condenser pressure sensor option is installed.**

Changing the starter type to AFDB sets up the parameters required by the Trane AFDB and sets up all of the displays associated with the AFDB control option in the UCP2. Once these steps are complete exit out of the Machine Configuration Group, by pressing the Service Settings key again. The AFDB control algorithm is now installed. To make the AFDB control operational, it must be enabled. See CVHE-CLD-1 or latest revision for other chiller/starter parameters.

To enable the AFDB control algorithm enter the Field Start-up Group. This group is also found by pressing the Service Settings key. The password keystroke combination to enter the Field Start-up Group is followed by the <Enter> key. All the AFDB control in Field Start-up Group. The AFDB control algorithm set point values are shown below. These values are found toward the end of the menu listing so that pressing the previous key is the quickest way to get to them. Enter the following data and record in the start-up log.

1. AF Adaptive Speed Control Alg

To get the AF control algorithm to work it must be enabled. Press the + or — key to change the setting to enable and then press the <Enter> key.

2. AF Leaving Water Standard Deviation

This value indicates the standard deviation permitted in evaporator leaving water temperature from the chilled water setpoint to allow speed decreases. The smaller the value, the more stable the ELWT must be before allowing speed decreases to occur. The Standard Deviation is adjustable from 0.5 to 4.0 Deg F, in increments of 0.1. The default value is 1.0 Deg. F.

3. AF Pressure Coefficient Constant

This value is used to normalize the PC (Pressure Coefficient) calculation. The value takes into account specific compressor parameters such as the number of compressor stages and average impeller diameter. The value entered at the UCP2 is shown in the following:

PC constant = (1,316,000)/(# of stages # Avg Dia ^2)

Example: Number of stages = 3,
Avg Dia = 24 inches

(This is nameplate – CPIM/10)
PC constant = 761.6, and is entered as 762.

The PC (Pressure Coefficient constant is adjustable from 0 to 2000, in increments of 1. The default is 800.

4. AF Re-Optimization Factor

The re-optimization factor is a magnitude-based parameter for clearing the Surge flag. It is helpful to think of this value relative to the size of the pressure error deadband.

For example, since the default deadband is 0.03, a re-optimization factor of 0.3 would be 10 x the deadband. Encountering a pressure error greater than 10 x the deadband during operation would imply that operating conditions have changed enough to clear the surge flag. This permits the Boundary Pressure Coefficient (BPC) Y-intercept to be increased if conditions allow, creating a more efficient operating condition.

Setting the re-optimization factor large will cause this re-optimization feature to operate using the time-based parameter. This factor is adjustable from 0.03 to 1.0, in increments of 0.01. The default value is 0.3.

5. AF Re-Optimization Timer
The re-optimization timer is time-based parameter for cleaning the surge flag. The timer begins to decrement from the front panel set point as soon as surge occurs. The timer counts down as long as the UCP2 is powered. This value indicates how aggressively the chiller will try and re-optimize for efficiency.

For example, if the re-optimization timer is set to 1 hr, the surge flag will be cleared 1 hour after being set. This permits the Boundary Pressure Coefficient (BPC) Y-intercept to be increased if conditions allow creating a more efficient operating condition. The re-op timer is adjustable from 1 to 255 hours, in increments of 1. The default value is 24 hours.

UCP2 Parameter Information

6. AF Boundary PC Y-Intercept
The Boundary Pressure Coefficient (BPC) Y-intercept value is used to determine the location of the BPC. This front panel value is unique because it can be changed by the user as well as internally by the control algorithm. The BPC Y-Intercept is adjustable from 0.01 to 2.0 in increments of 0.01. The default value is 0.4.

7. AF Boundary PC Y-Intercept Maximum
The Boundary Pressure Coefficient (BPC) Y-intercept is never allowed to exceed a maximum value. This value is a manual way to control the aggressiveness of the efficiency optimizing procedure.

For example, as this value is lowered the probability of encountering a surge decreases but so does the potential efficiency improvement at a given operating condition. The Boundary Pressure adjustable from 0.01 to 2.0 in increments of 0.01. The default value is 2.0.

8. AF Pressure Error Deadband

Anytime the PC is inside the pressure deadband, no further speed reductions are allowed. Thus the pressure deadband establishes a region where no background speed decreases will occur. Setting this value large will tend to make the AFDB control less aggressive at optimizing efficiency. The pressure error deadband is adjustable from 0.001 to 1.000 in increments of 0.001. The default value is 0.030.

9. AF Proportional Speed Gain

The proportional speed gain is used to convert from pressure error to delta Hz. The proportional speed gain is adjustable from 1 to 100 in increments of 1. The default value is 50.

Table 7 shows parameter settings to achieve two different operating criteria. The first is to aggressively move the operating conditions towards the surge line to achieve operating efficiency. The second is intended to avoid frequent surging but maintain operating efficiency.

Table 7 - List of Parameter Settings and Operating Criteria

Parameter Name	Aggressive	Surge Minimization
Starter Type	AFDB	AFDB
Condenser Pressure Sensor Option	Installed	Installed
AF Adjustable Speed Control Alg Enable	Enable	Enable
AF Leaving Water Standard Deviation	1.0	1.0
AF Pressure Coefficient Constant	See Note	
AF Re-optimization Factor	0.25	0.30
AF Re-optimization Timer	12	48
AF BPC Y Intercept	0.40	0.40
AF BPC Y Intercept Maximum	2.00	1.50
AF Pressure Error Deadband	0.025	0.030
AF Proportional Speed Gain	50	50

Note: This value must be calculated.

Adaptive Frequency™ Drive Control

Two very distinct operating modes make up the AFDB control within UCP2. In one operating mode, unit capacity is modulated by controlling inlet guide vane position, while impeller speed may be changed based on a time interval. In the other operating mode, unit capacity is modulated by controlling impeller motor speed with the inlet guide vanes held full open.

A graphical illustration of the various AFDB operating modes is shown in Figure 15. The illustration shows typical operating profiles for the various parameters involved as the system load slowly increases and then decreases.

Figure 15 - Operating Modes as Chiller Load Varies Over Time

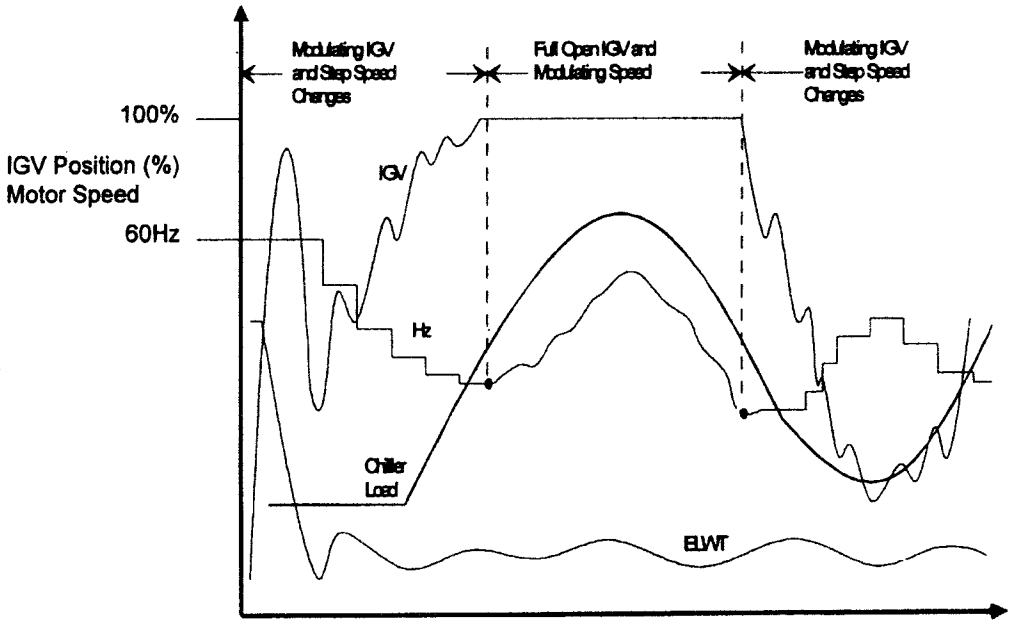

Typical Sequence of Operation

The AFDB/Chiller sequence of operation is very similar to standard chiller operation. Table 8 shows the steps in control logic that UCP2 follows in the operation sequence. This can be used with Figure 15 to gain overview of the control operation.

Table 8 - Steps in Control Logic in UCP2 Operation Sequence

Display	Event	Action Timing
Auto	Call for Cooling as required	
PreLube	Start Oil Pump	Bearing lubricated prior to start, 30 secs.
AFDB Cooling Pump	Start: **Note: The Water Pump turns on when the Oil Pump is started.**	
Starting	Accelerate to 60 Hz	
	Start Condenser Water Pump	
Unit is Running	Sample water temp., adjust IGV	Every 5 seconds
	Stable water temp., adjust speed, Adjust IGV as required	Every 5 minutes Every 5 seconds
	Achieve full open IGV-modulate speed only	Every 5 seconds
	Load drops below capacity at minimum speed and full open IGV	Loading done by speed increases on 5 second intervals. Unloading done by IGV on 5-second Intervals until 70% open.
	Load varies Stable water temp., adjust speed Adjust IGV as required	Every 5 minutes Every 5 seconds
Unit is Preparing to Shutdown	Load is satisfied	Close IGV's, then stop compressor
Postlube	Compressor Is stopped	Bearings lubricated on coast down, 2 minutes
AUTO	Oil Pump AFDB Cooling Pump are de-energized	
STOP	Condenser Water Pump is de-energized	
AUTO	Chilled water pump is de-energized	

Sequence of Operation Detail

The most efficient operating mode for a centrifugal chiller is controlling speed with the inlet guide vanes full open. Thus, after meeting the chilled water setpoint requirement, the secondary goal of the AFDB control is to drive the chiller toward this more efficient operating mode. To do this, the controller attempts to reduce impeller speed during operation, in a background control loop, executed every 5 minutes. A reduction in impeller speed causes a reduction in chiller capacity. Reduced chiller capacity means the chiller is not meeting load requirements, which increases the leaving water temperature error. To reduce this error, the inlet vanes open further as a natural response to the leaving water temperature control. The AFDB controller attempts to continue this process of background speed reduction until the IGVs reach full open. When the inlet vanes reach full open, operation transitions to capacity control by modulating impeller motor speed, and in this mode, the chiller is running as efficiently as possible. Depending on operating conditions, the chiller may or may not be able to enter into this mode.

Operating Mode 1

At unit start up, the compressor's motor speed is normal line frequency of 60 Hz. The standard leaving water temperature control is executed every 5 seconds, and modulates inlet guide vane position as on a constant speed machine. Modulating inlet guide vane position varies unit capacity so the leaving water temperature can be maintained to within a deadband (as set by the AF Leaving Water Standard Deviation) about the desired chilled water set point.

Once the Evaporator Leaving Water Temp Set Point is met and in steady state (or pull down is complete). A slower background control loop is executed every 5 minutes, to try and improve efficiency by reducing impeller speed. At each 5-minute sample period, three conditions must be satisfied for a speed reduction to take place. These conditions are:

1. The Evaporator IGV Water Temperature must be in steady state.

2. There must be a negative deadband pressure error. (The compressor is not predicted to surge).

3. The unit must not be surging, and the surge timer must be zero.

The non-dimensional Pressure Coefficient (PC), illustrated in Figure 16, is derived from enthalpy change across the compressor, and compressor parameters such as average impeller diameter (in inches), speed, and AF Pressure Coefficient Constant.

If all three of the above criteria are satisfied, a background speed reduction can occur. The magnitude of a speed reduction is directly proportional to the deadband pressures error. (The maximum reduction is 2 Hz). Once a speed reduction takes place the inlet guide vanes open further in natural response to an increasing leaving water temperature error. In addition, the PC tends to move closer to the Boundary Pressure Coefficient (BPC) value.

Assuming constant operating conditions, Figure 16 illustrates a typical trajectory for the pressure coefficient during background speed reductions.

Figure 16 - Variables Involved in Desirable/Undesirable Compressor Operation

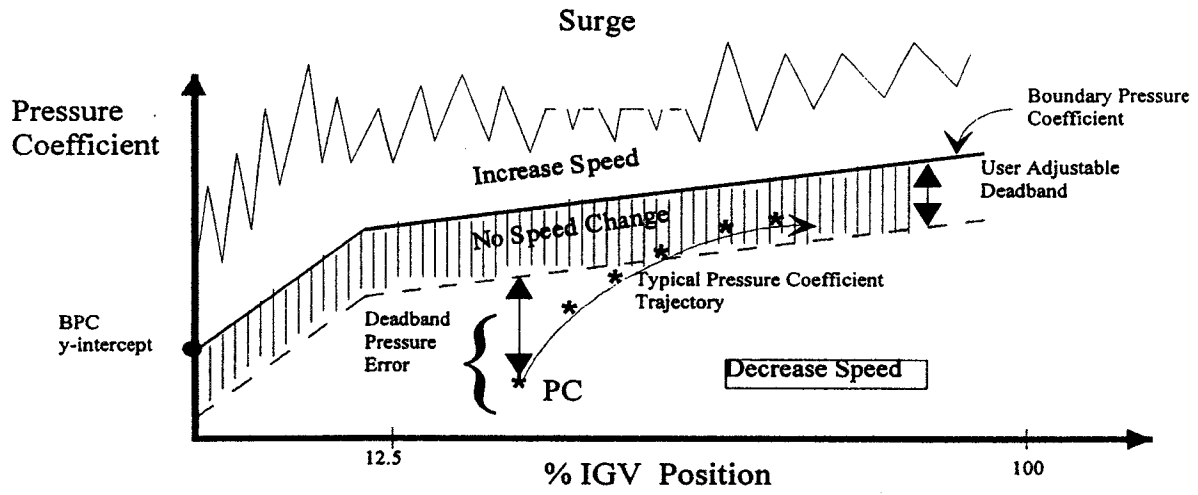

If the PC remains in the deadband no speed changes are allowed. If the PC rises above the BPC value a speed increase is performed in proportion to the error. This is done to force the PC back into the deadband away from surge. As long as the PC lies below the pressure deadband a speed reduction can occur.

Operating Mode 2

The most efficient operating mode for a centrifugal chiller is controlling speed with the inlet guide vanes full open. Thus, after meeting the chilled water setpoint requirement, the secondary goal of the AFDB control is to drive the chiller toward this more efficient operating mode.

In Operating Mode 1, the controller attempts to reduce impeller speed during operation, in a background control loop, executed every five minutes. A reduction in impeller speed causes a reduction in chiller capacity. Reduced chiller capacity means the chiller is not meeting load requirements, which increases the leaving water temperature error. To reduce this error, the inlet guide vanes open further as a natural response to the leaving water temperature control.

The AFDB controller attempts to continue this process of background speed reduction until the IGV's reach full open. When the inlet guide vanes reach full open (Operating Mode 2), operation transitions to capacity control by modulating impeller motor speed. In this mode, the chiller is running as efficiently as possible. Depending on operating conditions, the chiller may or may not be able to enter into this mode.

This control mode uses the same leaving water temperature control algorithm as in Operating Mode 1, but with an appropriate scaling factor to convert from IGV motor steps to Hertz. When a transition occurs, the commanded impeller speed at that time is remembered by the control algorithm.

This value, referred to as the "transition in value" (or HzTrans), sets the bottom end of the modulating range. Any of three conditions below will cause a transition out of this operating mode:

1. Modulating lower than 0.6 hertz below Hztrans.

2. Encountering a forced unload limit condition.

3. Detecting a surge.

In the *inverter-modulating mode,* commanding impeller speed below Hztrans – 0.6 will cause a transition to Operating Mode 1. This is because the probability of encountering surge increase as impeller speed falls below the Hztrans value. To guarantee that the vanes handle additional unloading, a flag is set. Setting this flag causes any further unloading to go to the inlet guide vanes and any loading to the impeller speed. The flag is not cleared until the inlet guide vanes go below 70% of full open. Once cleared, the control algorithm can begin to do background speed decreases again.

The detection of a *forced unload limit condition* will cause a transition to Operating Mode 1. The inload request is exercised by the inlet guide vane actuator, while motor speed is held constant. Motor speed is not increased to avoid worsening the limit. Conversely, motor speed is not decreased to avoid surge.

The *detection of a surge* will cause a transition to Operating Mode 1.

Surge Detection

Surge detection control logic monitors changes in compressor motor current. A surge occurrence leaves a characteristic motor current signature as shown below in Figure 17. This signature is formed because the transitory pressure breakdown between the condenser and evaporator causes a sudden reduction in compressor motor load. As the pressures equalize, the compressor begins to quickly load, increasing motor current.

Rectified and filtered motor current is sampled every 0.2 seconds. A 30% change is required between the present sampled value and the previous three values to be considered a surge occurrence. Two surge occurrences are required within one minute to denote a unit in surge. This logic is intended to catch all audible surge occurrences. If a surge is detected, control logic will simultaneously increase motor speed by 2.0 hertz terminating the existing surge condition. Motor speed is increased to terminate the present surge condition. Additionally, the logic will "remember" the surge condition and will avoid future occurrences by not allowing operation, and preventing further speed reductions, at these conditions.

UCP2 Interface to Adaptive Frequency Drive

The UCP2 provides a "Start" contact closure output to command the Adaptive Frequency Drive to begin its start sequence. A 2-10 VDC analog speed signal output is provided by the UCP2 to provide a speed reference to the AFDB. The UCP2 also provides both "Fault" and "Up-to-Speed" (transition complete) contact closure inputs for variable frequency drive starters.

At start of the compressor motor a signal corresponding to normal line frequency (Full Speed) is applied to the speed signal input of the drive.

Figure 17 - Motor Current Signature Representing Surge

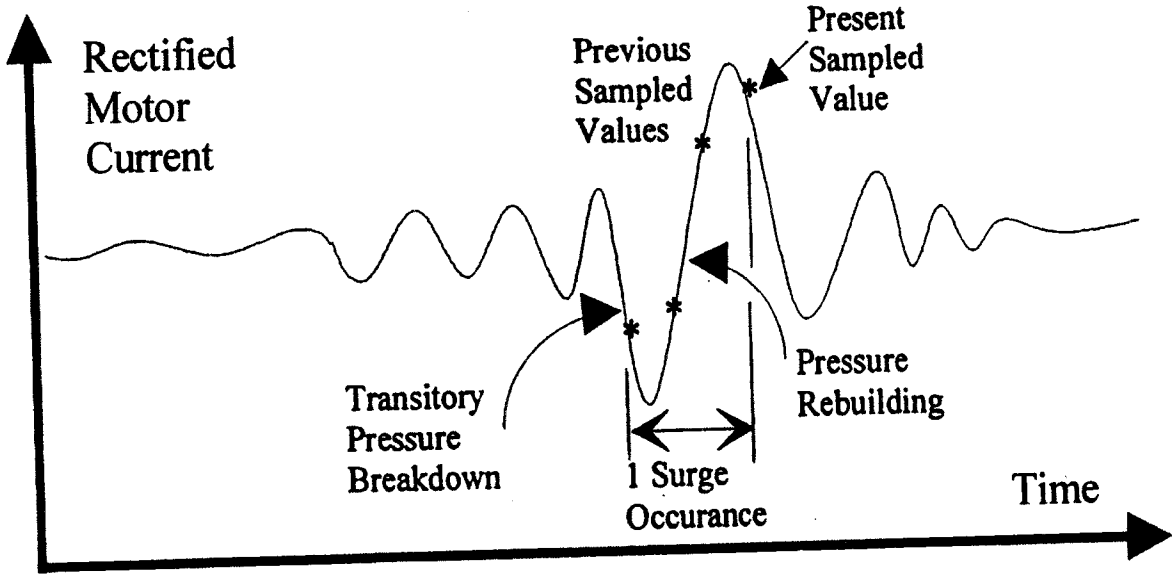

A contact opening at the "Fault" input to the Starter Module shall cause removal of the "Start"

A contact opening at the "Fault" input to the Starter Module shall cause removal of the "Start" signal and the generation of a MANUAL RESET (NMR) diagnostic. The Starter module waits a minimum of 15 seconds for the currents to go away on a shutdown before a contactor failure diagnostic is called.

As illustrated in Figure 18, the speed reference signal shall be set-up such that 2-10 vdc corresponds to 38-60 Hz, respectively.

Note: Unlike electromechanical starters, the phase currents cannot be expected to rise above 85 percent RLA prior to 1.6 seconds following the closing of the "Start" contact and remain above 85 percent RLA until the compressor motor has come up to speed. The "Up-to-Speed" contact operation cannot be tied to the motor currents falling below 85% RLA.

Therefore, regardless of motor current the "Up-to-Speed" contact closure input will be expected to close before the Maximum Acceleration Timer times out, otherwise a MANUAL RESET (MMR) diagnostic shall occur.

Figure 18 - Drive Frequency vs. Speed Reference Signal

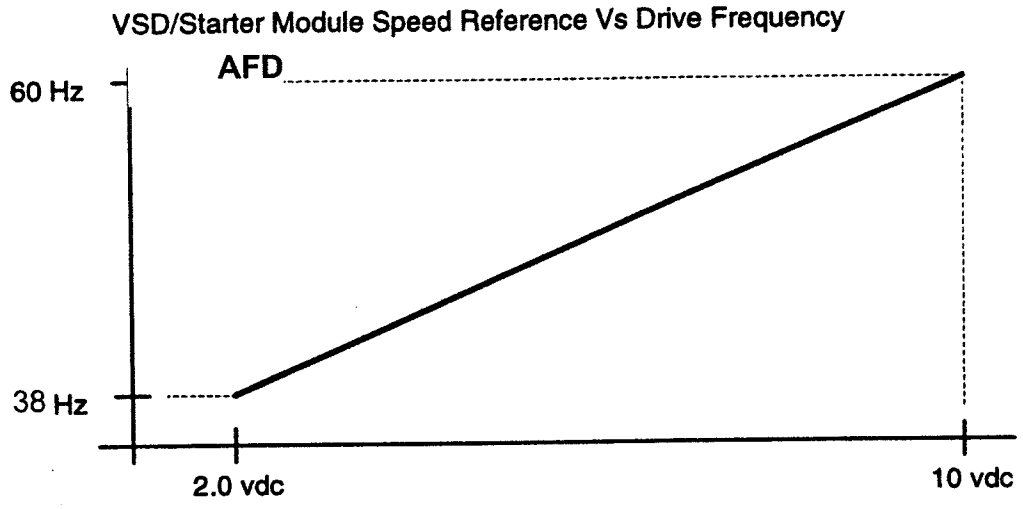

The block diagram, Figure 19, shows the communication of the starter module to Unit Mounted Inverter Interface.

Figure 19 - Starter Module to Unit Mounted Inverter Interface Block Diagram

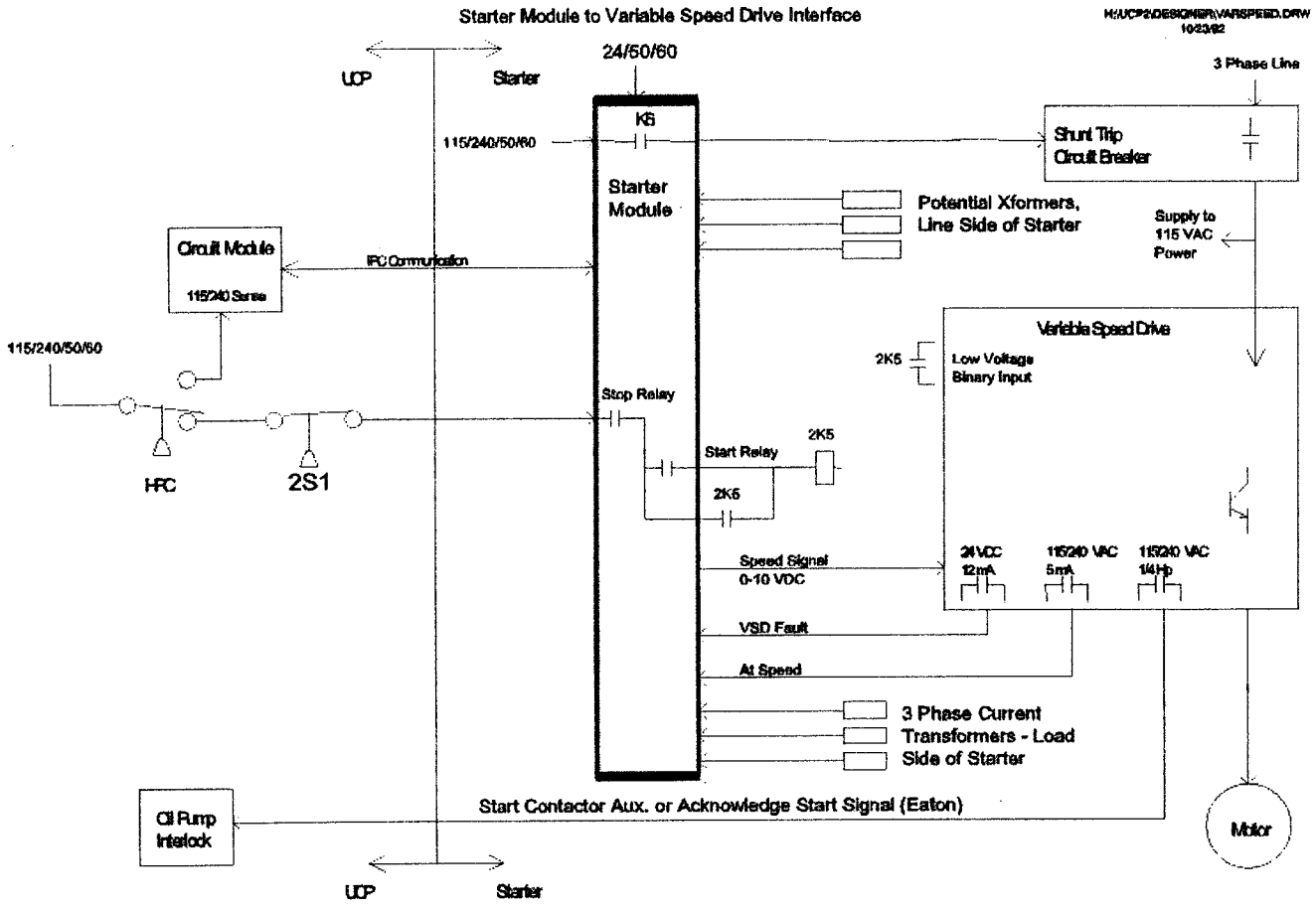

The Oil Pump Interlock load is 115VAC, 1/4 HP.

Figure 20 - 1000 HP Only (Cooling Water Pressure Control (2S1)

1. Loss of Voltage between 2TB1-4 and 2TB1-5 as shown on 2303-5223 schematic for the Unit-Mounted AFDB.

   a. If voltage is present at 1U2 J26-2 (Wire 277B) the UCP2 will latch out and indicate a "High Condenser Pressure".

   b. If no voltage is present at 1U2 J26-2 the UCP2 will latch out and assume a "Phase Loss". (Momentary Power Loss is disabled on a VFD).

   c. Unit will not restart until Water Pressure Switch (231) is manually reset.

(11) Keypad Introduction

THIS SECTION DESCRIBES USING THE KEYPAD/DISPLAY TO PROGRAM, MONITOR AND CONTROL THE DRIVE.

The AFDB keypad unit controls and primary operator interface. All keypad setup functions come factory set and do not require field setup. Reference Figure 20 showing the keypad.

The Front panel keypad/display is used to program, monitor and control the drive. It operates in two (2) modes: the monitor mode and program mode. The functions available at the keypad depend on what mode the keypad/display is and what has been selected as the drive control source.

In the MONITOR mode, (the default mode), you can monitor specific drive outputs as well as enter the speed or frequency reference for the drive. The drive speed and hertz can be observed as well in the UCP2 compressor report.

In the PROGRAM mode, you can view and adjust the drive parameter values, and examine the error log.

THE UCP2 PANEL SHOULD BE USED TO START AND STOP THE DRIVE, NOT THE AFDB KEYPAD.

Using the Key Pad/Display to program, monitor and control the drive. The following sections describe monitor and program mode in more detail. The keypad, display, and LEDs are described later in this chapter.

Figure 20 - Key Pad/Display

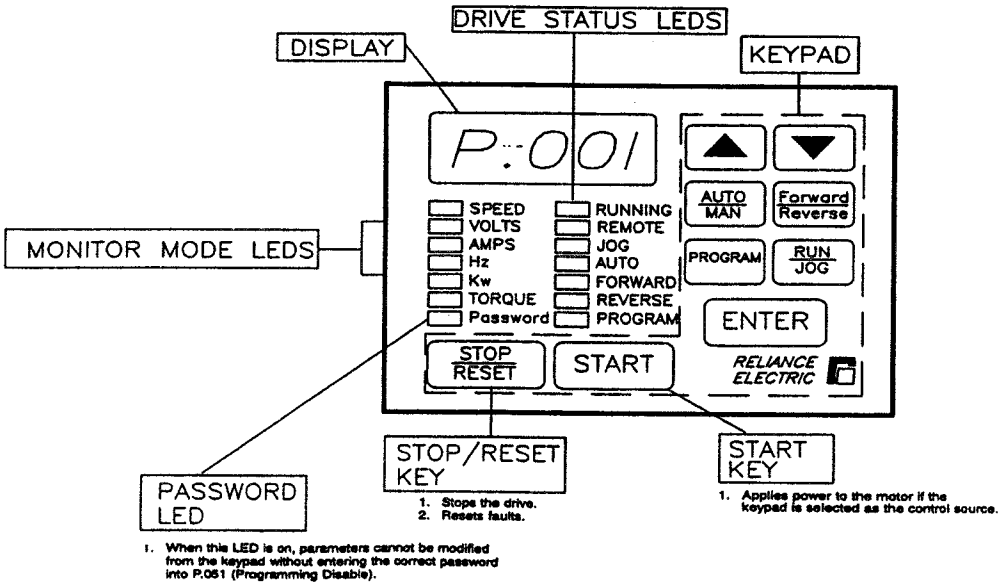

Monitor Mode

Monitor mode, see Figure 21, is the keypad/displays default mode during drive operation or it is entered by pressing the PROGRAM key until the PROGRAM LED turns off. The following output data can be displayed in monitor mode:

- Speed
- Volts
- Amps
- Hz
- KW (output)
- Torque (vector regulation only)
- Selected reference (speed or torque)

To select a value to monitor, press the ENTER key until the LED turns on next to the desired display item. Pressing the ENTER key will advance you through each of the displays. (Note that all of the LEDs will turn on to indicate the selected reference display).

Figure 21 - Example of a Monitor Mode Display

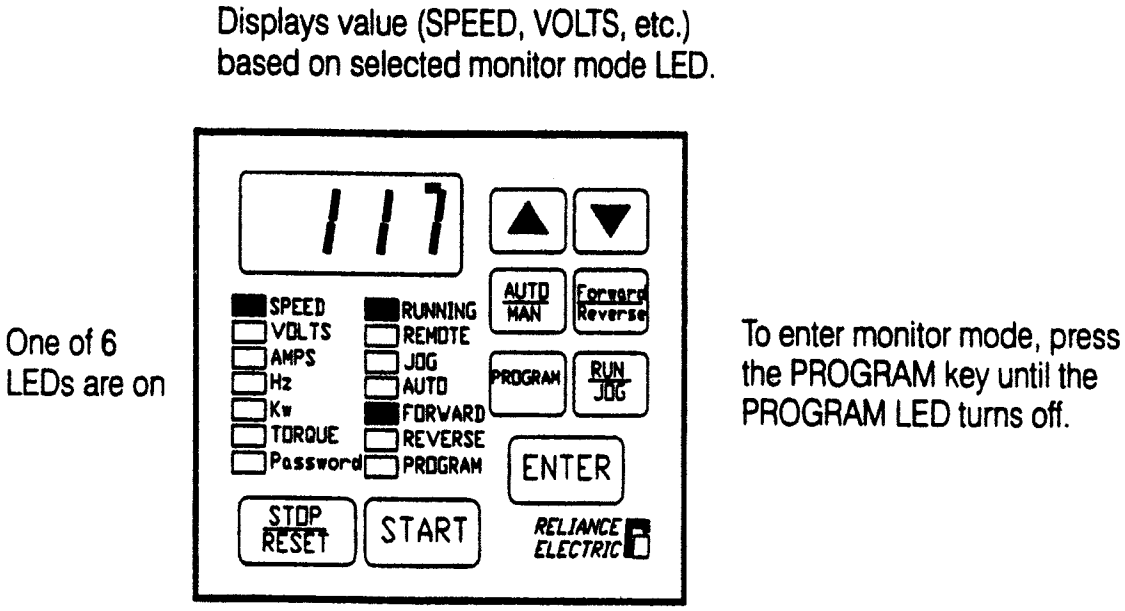

Displaying the Selected Reference

In monitor mode, you can display the speed reference (speed or frequency) or the torque reference the drive is using while it is running (RUNNING LED is on, JOG LED is off). Follow these steps to display the selected reference:

Step 1. If you are not already in monitor mode, access it by pressing the PROGRAM key until the PROGRAM LED turns off.

Step 2. Press the ENTER key repeatedly to advance through each of the monitor mode LEDs. All of the monitor mode LEDs will then turn on at once and the reference will be displayed. Note that the displayed speed reference value is scaled based on parameter P.028. The torque reference value is displayed in percent.

If the selected reference is negative and its value is greater than 999, the SPEED LED will flash.

Pressing the ENTER key again will advance you to the SPEED monitor display.

Entering the Manual Speed Reference

You can change the manual speed reference at any time while in monitor mode regardless of the control source. Follow these steps to enter the manual speed reference:

Step 1. From monitor mode, press the UP ARROW key or the DOWN ARROW key once. The monitor modes LEDs will all turn off, and the current manual speed reference value will be displayed.

Step 2. Press the UP ARROW key or the DOWN ARROW key to change the displayed value of the desired manual speed reference. Note that the speed reference is in the units defined in parameter P.028

Step 3. Press the ENTER key or wait approximately 5 seconds without pressing the UP ARROW or DOWN ARROW keys to return to monitor mode. (If the drive is not running, you must press the ENTER key to return to monitor mode).

Program Mode

Program mode, see Figure 22, allows you to display and modify drive parameter values. To enter program mode, press the PROGRAM key until the PROGRAM LED turns on. The following can be displayed in program mode:

- Parameter numbers
- Parameter values
- Error log information

If the Programming Disable parameter (P.051) has been set to prevent parameter modification from the keypad, the PASSWORD LED will also be on before any parameter values can be modified, you will have to access parameter P.051 and enter the password (a factory-set value) to re-enable programming. When programming has been enabled, the PASSWORD LED will turn off.

Note that CONFIGURABLE parameters can be changed only when the drive is stopped. See Section "Parameter Types" in this manual.

Figure 22 - Example of a Program Mode Display

Display shows
menu selections:
P.---
H.--- (if P.048 = U-H)
U.--- (if P.048 = UEC)
r.--- (if the optional RMI
board is installed)
or
Err (Error Log)

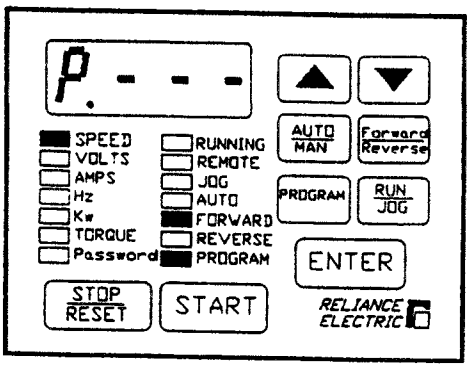

PROGRAM
LED IS ON

The Display

The display portion of the keypad/display is a four-character, sever-segment LED. At drive power-up, SELF is displayed as the drive performs power-up diagnostics. During drive operation, the display indicates parameter numbers; parameter values, fault or alarm codes, and drive output values. Figures 21 and 22 show sample displays.

Display Range

Normally, a minus (-) sign is used as one of the four characters in the display to indicate a negative value. If a value (including the minus sign) exceeds four characters, the display will drop the minus sign and display four digits. In this case, the SPEED LED will flash to indicate that the displayed value is a negative number. Refer to the examples below in Table 9.

Note that a decimal point to the right of the last digit in the display indicates there is further resolution (example D) unless a decimal point already appears as part of the number displayed (example F). In either case, the system uses the full resolution of the number for drive control, not the displayed value.

Table 9 – Display Examples

Example	If the actual number is...	It will appear on the display as...	And the SPEED LED will...
A	-999	-999	Not flash
B	-1000	1000	Flash
C	-99.9	-99.9	Not flash
D	-1000.5	1000.	Flash
E	-9.99	-9.99	Not flash
F	-100.25	100.2	Flash
G	-9.999	9.999	Flash

This does not apply for the speed display. For the speed display, the FORWARD or REVERSE LEDs indicate actual speed reference polarity.

(11) Keypad Introduction

The Keypad



The drive's keyboard has nine (9) membrane keys that are used to monitor, program, and control the drive.

The AUTO/MAN key is used to switch between the auto speed reference and the manual speed reference as shown in Table 10 below: This is set in P.052 to "ON" (which disables the AUTO/MAN key).

Table 10 – Auto/Man Key Reference

AUTO/MAN Status	Control Source (P.000)	Speed Reference Source
AUTO selected	Local keypad/display (P.000 = LOCL)	Terminal strip
	Terminal strip remote Inputs (P.000 = rE)	Terminal strip
	Option port (P.000 = OP)	Network
	Serial port (P.000= SerL)	Terminal strip
MAN selected	Local keypad/display (P.000= LOCL)	Local keypad/display or OIM
	Terminal strip remote Inputs (P.000=rE)	Local keypad/display or OIM
	Option port (P.000=OP)	Local keypad/display or OIM
	Serial port (P.000=SerL)	Local keypad/display or OIM

If the control source is changed, the AUTO/MAN selection may be changed as well. When the control source is changed to OP or rE, the AUTO/MAN selection will be forced to AUTO. If the control source is changed to LOCL or Serl, the AUTO/MAN selection will be forced to MANUAL. However, if the control source is changed from LOCL to SerL or vice versa, the AUTO/MAN selection will not be changed.

Refer to the P.000 parameter description for more information on control source selection.

Note: *This key is not active if the control source is SerL.*

Refer also to the P.053 (Manual Reference Preset Enable) parameter description.

⚠ WARNING
WHEN SWITCHING FROM AUTO TO MANUAL, OR MANUAL TO AUTO, THE DRIVE WILL RAMP TO THE REFERENCE LEVEL PROVIDED BY THE NEW SOURCE AT THE RATE SPECIFIED IN P.0001 (ACCEL TIME 1), P.002 (DECEL TIME 1), P.17 (ACCEL TIME 2), OR P.018 (DECEL TIME 2). BE AWARE THAT AN ABRUPT SPEED CHANGE MAY OCCUR DEPENDING UPON THE NEW REFERENCE LEVEL AND THE RATE SPECIFIED IN THESE PARAMETERS. Failure to observe this precaution could result in bodily injury.

(11) Keypad Introduction

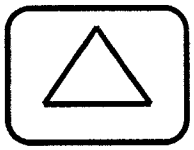

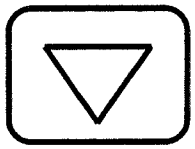

The UP and DOWN arrow keys are used to:
Step through the drive parameter menus and error log when the keypad/display is in program mode.
Increase (or decrease) a numeric value (such as the reference or a parameter value).



The ENTER key is used to:
Display a parameter (or a selection) value in program mode.
Save a value
Move through each monitor display item when in monitor mode.



The PROGRAM key is used to move between program and monitor modes. The PROGRAM LED will turn on when the keypad/display is in program mode and turn off when the keypad/display is in monitor mode.



Not active on the AFDB. P.000 is set to REMOTE which deactivates this function.



Not active on the AFDB. P.000 is set to REMOTE, which deactivates this function.

(11) Keypad Introduction



Not active on the AFDB. P.000 is set to REMOTE, that deactivates this function.



If the drive is running (RUNNING LED is on), the STOP/RESET key will stop the drive. If the drive is not running (RUNNING LED is off), pressing this key will reset drive faults.

(12) Drive Status LEDs

The keypad contains eight LEDs that show the present drive status. The list below describes what each drive status means.

RUNNING	On	Output power is being applied to the motor.
	Off	Output power is not being applied to the motor.
REMOTE	On	The drive is being controlled from a source other than the keypad.
	Off	The drive is being controlled from the keypad.
	Flashing	The network connection is lost.
AUTO	On	The drive is receiving its speed reference from the terminal strip input or network option.
	Off	The drive is receiving its speed reference from the local keypad or serial port (OIM or CS3000), i.e., uses a manual reference.

NOTE: *If the speed reference is zero (0), pressing the FORWARD/REVERSE key (or toggling the FWD/REV input) will not alter the state of the FORWARD or REVERSE LEDs.*

PROGRAM	On	The keypad/display is in program mode.
	Off	The keypad/display is in monitor mode.
PASSWORD	On	Parameters cannot be modified from the keypad without entering the correct password into P.051 (Programming Disable). Note that disabling program changes by means of P.051 will not prevent parameter changes being made from the serial port or the network.
	Off	Parameters can be modified from the keypad.

Table 11 describes the values that will be displayed when the corresponding monitor mode LED is on.

Table 11- Monitor Mode LEDs

Monitor Mode LED	Corresponding Display When LED is On (Actual Values)
SPEED	Motor speed is displayed. This value is scaled in parameter P.028.
VOLTS	Drive output volts are displayed. This value is **not** DC bus volts.
AMPS	Drive output amps are displayed.
HZ	Drive output frequency in hertz is displayed.
KW	Output power of the drive in kilowatts is displayed. Note that this is intended for display purposes as a general indication of kilowatt output and should not be used for control or exact metering purposes.
TORQUE	Motor output torque is displayed in percent. (Valid only for vector regulation).
ALL LED's	Selected speed reference (in P.028 units) or torque reference (in %) is displayed.

Programming Reference

To program the drive for a specific application, you display the approaching parameter and adjust it an overview of the parameter menus as well as detailed descriptions of each parameter. This chapter also describes how to access, display, and modify parameters.

Parameter Menus

To simplify the configuration process, the drive software parameter list is divided into two menus: the FIRST menu and the SECOND menu. These are shown in Figure 23 and described below.

The FIRST menu contains General parameters (P.000 through P.006) which are commonly used for simple applications.

The SECOND Menu contains parameters that allow drive adjustment for more complex applications. These functions can be safety related and should be used only with a thorough understanding of how they may affect motor operation.

Within the SECOND Menu are:

- General parameters (P.007 through P.099). These parameters apply to both vector and V/Hz applications.
- Volts/Hertz parameters (H.000 through H.022). These parameters are used only for V/Hz applications and are displayed if U-H is selected in parameter P.048 (Volts/Hertz or Vector Regulation).
- Vector parameters (U.000 through U.021). These parameters are used only for vector applications and are displayed if UEC is selected in parameter P.048.
- RMI parameters (r.001 through r.066). These parameters are displayed only if an optional Remote Meter Interface board (M/N 2SI3000) is installed in the drive.
- The error log. The error log is shown as Err on the display.

Access to the SECOND menu parameters is enabled/disabled using the Second Menu Password parameter (P.006).

Figure 23 - Parameter Menu Structure

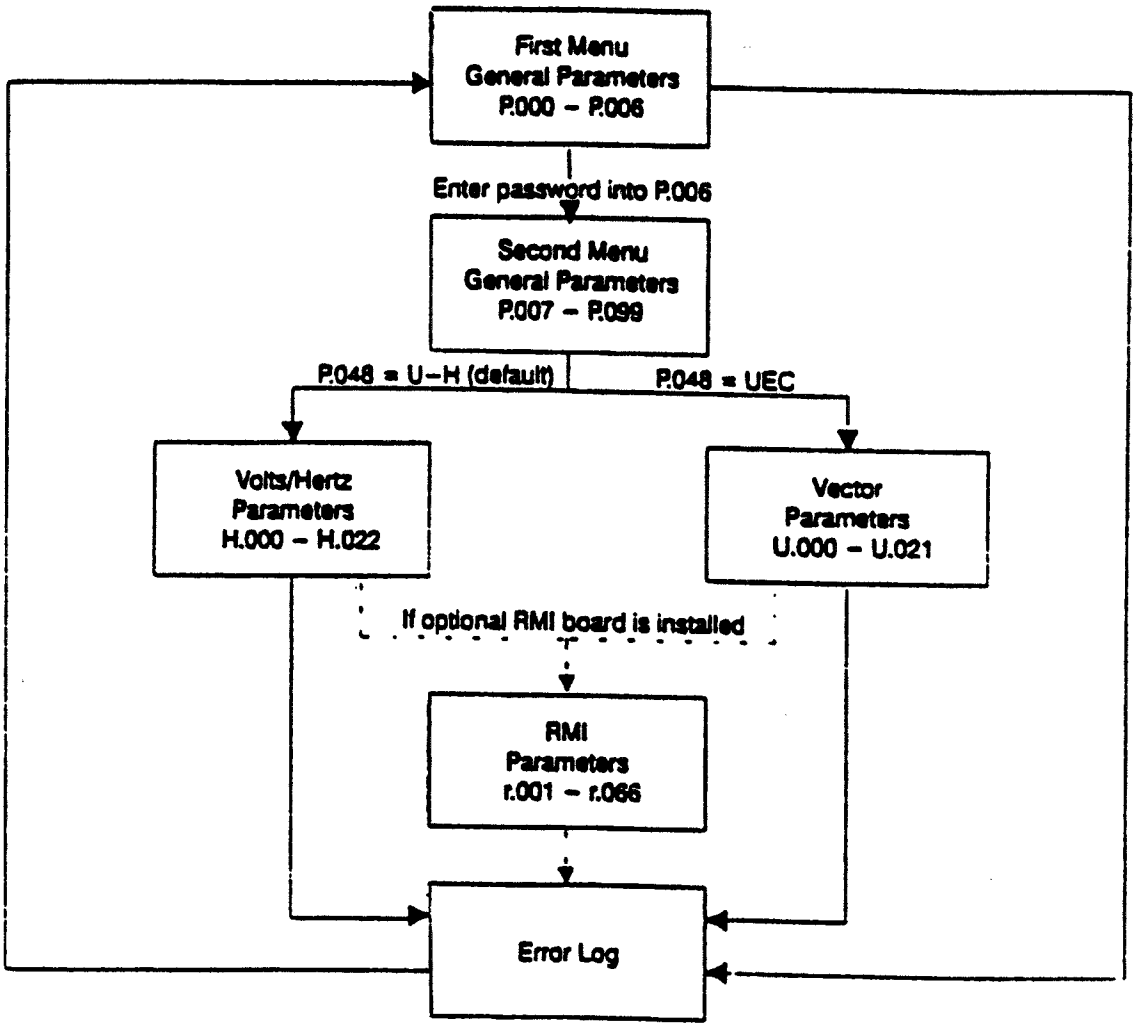

(13) Parameter Types

⚠ WARNING
ONLY QUALIFIED ELECTRICAL PERSONNEL FAMILIAR WITH THE CONSTRUCTION AND OPERATION OF THIS EQUIPMENT AND THE HAZARDS INVOLVED SHOULD START AND ADJUST IT. READ AND UNDERSTAND THIS MANUAL IN ITS ENTIRETY BEFORE PROCEEDING. Failure to observe this precaution could result in severe bodily injury or loss of life.

THERE ARE THREE TYPES OF PARAMETERS:

CONFIGURABLE: These parameters can be adjusted or changed only while THE DRIVE IS STOPPED.

TUNABLE: These parameters can be adjusted or changed while the drive is RUNNING OR STOPPED.

READ ONLY: These parameters CANNOT BE ADJUSTED.

EACH PARAMETER IS DESCRIBED IN DETAIL IN THIS CHAPTER. THE FOLLOWING INFORMATION IS PROVIDED FOR EACH PARAMETER:

Parameter Number: The unique number assigned to a specific parameter. The number is preceded by P, H, U, or r to identify it as a General, Volts/Hertz, Vector, or optional RMI parameter, respectively. The parameter number is displayed on the drive's keypad/display.

Parameter Name: The name assigned to a parameter number. The parameter name is not displayed when programming the drive using the keypad/display. The parameter name is only visible when using the CS3000 software or Operator Interface Module (OIM).

Parameter Description: A description of the parameter's function.

Parameter Range: The pre-defined parameter value limits or selections.

Default Setting: The factory default setting.

Parameter Type: Identifies whether the parameter is tunable, configurable, or read only.

Refer also to parameters: A list of associated parameters that may provide additional or related information.

Figure 24, on the following page, provides steps on how to display or change parameter values.

Figure 24 - Procedure to Display or Change Parameter Values:

Step 1. Press the PROGRAM key until the PROGRAM LED turns on to enter program mode.

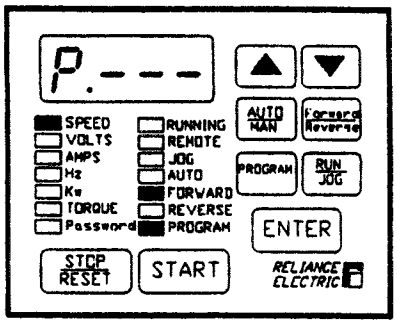

One of the main parameter menus (P.---, H.---, U.---, Err, etc.) will be displayed.

Step 2. Use the ↑ key or the ↓ key to move through the menus.

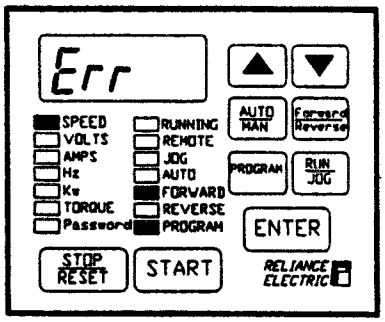

Note that if P.--- and Err are the only two menu selections displayed, access to the Second Menu parameters has been restricted. A password must be entered into parameter P.006 in order to access the Second Menu parameters.

Step 3. Once the desired menu is displayed, press the ENTER key to select it.

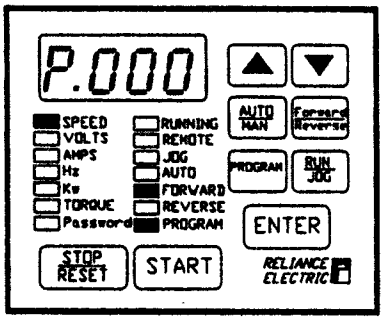

The first parameter number in the menu or the last parameter number previously accessed from that menu will be displayed.

Step 4. Press the ↑ key or the ↓ key to move through the parameters.

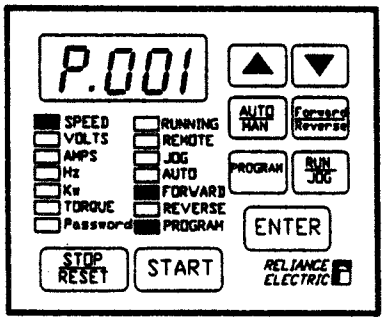

Each parameter number will be displayed as you move through the parameters.

Continued examples of Parameter Values

Step 5. Once the desired parameter is displayed, press the ENTER key to access it.

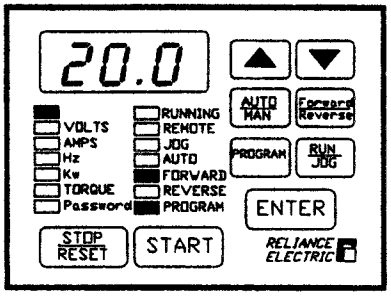

The parameter value will be displayed.

Step 6. Press the ↑ key or the ↓ key to change the value.

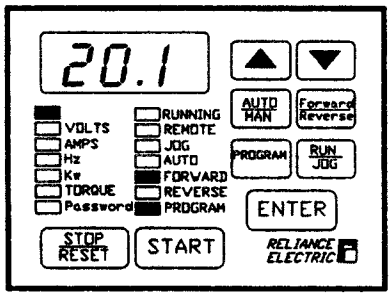

Note that if programming is disabled in parameter P.051 (Programming Disable), or if the parameter is configurable and the drive is running, the value will not change.

Step 7. Press the ENTER key to save the changed value.

- OR -

Press the PROGRAM key to exit the parameter without changing the value.

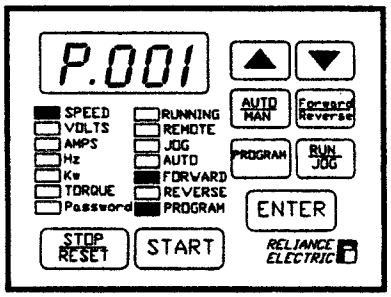

The parameter number will be displayed again.

NOTE: *The value will not be written into memory unless the ENTER key is pressed.*

To display or change additional parameters within this menu, repeat steps 4 through 7.

To display or change parameters in a different menu, press the PROGRAM key to return to the main menu selections. Then repeat steps 2 through 7.

To exit program mode, press the PROGRAM key until the PROGRAM LED turns off.

NOTE: *Parameter values and the local keypad status are retained through a line dip or power shutdown.*

Protecting Parameter Values

Parameter values can be password-protected using parameter P.051 (Programming Disable). When programming is disabled, parameter values can be displayed but cannot be modified from the keypad unless the correct password is entered in P.051. Note that disabling program changes by means of P.051 will not prevent parameter changes being made from the serial port on the network.

⚠ WARNING
IT IS THE USER'S RESPONSIBILITY TO DETERMINE HOW TO DISTRIBUTE THE PASSWORD. THE TRANE COMPANY IS NOT RESPONSIBLE FOR UNAUTHORIZED ACCESS VIOLATIONS WITHIN THE USER'S ORGANIZATION. Failure to observe this precaution could result in bodily injury.

Use the following procedure to disable/enable parameter programming.

Step 1. Select parameter P.051 from the Second Menu General parameters. P.051 will appear on the display.

Step 2. Press the ENTER key to access the parameter. A zero will be displayed.

Step 3. Use the ↑ key to increment the value to 26. This is the password number.

Step 4. Press the ENTER key to save the value. P.051 will be displayed.

Parameter programming is disabled when the PASSWORD LED is on and enabled when the PASSWORD LED is off.

To prevent unauthorized password use, a zero value (not the saved password value) is displayed whenever this parameter is accessed.

Note: *Parameter values and the local keypad status are retained through a line dip or power shutdown.*

First Menu Parameters

The First Menu contains General parameters that are most commonly used for simple applications. No password is required to access them. These parameters apply only to both vector and V/Hz programming.

First Menu General Parameter Descriptions (P.000 to P.006)

P.000 Control Source

This parameter selects the drive control source. The drive will respond to the reference start commands (inputs) only from the source selected in this parameter.

Parameter Range: LOCL = Local keypad/display
rE = Terminal strip remote inputs
OP = Option port

SErL = Serial port (CS3000 or OIM)*

Default Setting: LOCL

Parameter Type Configurable

Refer also to parameters: P.007 Terminal Strip Digital Inputs Configure
P.008 Terminal Strip Speed Reference Source
P.063 Option Port: Network Reference Source

⚠ WARNING
IN V/HZ REGULATION, IF P.000 (CONTROL SOURCE) IS SET TO OP (OPTION PORT), AND P.062 IS SET TO 1 (HOLD LAST REFERENCE), AND THE DRIVE LOSES COMMUNICATION WITH THE NETWORK, THE DRIVE WILL MAINTAIN THE LAST FREQUENCY COMMAND SENT TO IT. ENSURE THAT DRIVEN MACHINERY, ALL DRIVE-TRAIN MECHANISMS, AND APPLICATION MATERIAL ARE CAPABLE OF SAFE OPERATION AT THE MAXIMUM OPERATING SPEED OF THE DRIVE. Failure to observe this precaution could result in bodily injury.

The selected drive control source is determined primarily by the value in P.000. However, if P.000 = rE, then the REM/LOC input may toggle the control source between the local keypad and the terminal strip. See P.007 (Terminal Strip Digital Inputs Configure).

Depending on the control source selected, the AUTO/MAN key can be used to switch between speed reference sources as shown below in Table 12:

Table 12 - Control Source Displays/Speed Reference Source Displays

Control Source (P.000)	AUTO/MAN Status	Speed Reference Source
Local Keypad/display (P.000=LOCL)	AUTO selected	Terminal strip
	MAN selected	Local keypad/display or OIM
Terminal strip remote inputs (P.000 = rE)	AUTO selected	Terminal strip
	MAN selected	Local keypad/display or OIM
Option port (P.000=OP)	AUTO selected	Network
	MAN selected	Local keypad/display or OIM
Serial port (P.000-SErL)	AUTO selected	Terminal strip
	MAN selected	Local keypad display or OIM

Set P.000 = OP to select the DeviceNet™ Network option board or the AUTOMAX® Network option board as the drive control source.

Note: *The REMOTE LED will turn on if any control source other than the local keypad is selected.*

*For more information about the Control and Configuration Software (CS3000), refer to instruction manual D2-3348. For more information about the GV3000 OIM (Operator Interface Module, M/N 2RK3000), refer to instruction manual D2-3342.

P.001 Accel Time 1 (RAMP 1)

For V/Hz regulation, this parameter specifics the time in which the motor goes from zero speed to Maximum Speed (P.004).

For vector regulation, this parameter specifics the time in which the motor goes from zero speed to Motor Top Speed (U.017).

Parameter Range: 1.0 to 999.9 seconds (V/Hz)
0.1 to 999.9 seconds (vector)

Default Setting: 8.0

Parameter Type: Tunable

Refer also to parameters: P.004 Maximum Speed
P.005 Current Limit
U.017 Motor Top Speed

The time the motor takes to make any speed increase is directly proportional to the value in this parameter.

If the motor load inertia is high, or the Current Limit (P.005) setting is too low, actual motor acceleration time will be longer than the time set in P.001. If Accel Time 1 is set too short, an overcurrent fault may occur.

P.002 Decel Time 1 (RAMP 1)

For V/Hz regulation, this parameter specifies the time in which motor speed decreases from Maximum Speed (P.004) to zero speed.

For vector regulation, this parameter specifies the time in which motor speed decreases from Motor Top Speed (U.017) to zero speed.

Parameter Range: 1.0 to 999.9 seconds (V/Hz)
0.1 to 999.9 seconds (vector)

Default Setting: 18.0

Parameter Type: Tunable

Refer also to parameters: P.004 Maximum Speed
P.025 Stop Type
U.017 Motor Top Speed

The time the motor takes to make any speed decrease (except a coast-to-rest stop) is directly proportional to the value in this parameter.

Note: *Motor load inertia and input line conditions can extend the deceleration time to a value greater than the preset time. With very fast deceleration times, regenerative motor voltage may charge up the DC bus voltage, causing a high bus voltage (HU) fault. To avoid a fault condition, extend the deceleration time for a period. If a deceleration time faster than the acceptable range is required, installing an optional Snubber Resistor Kit or Regenerative Braking Module Kit may prevent the fault.*

For V/Hz regulation with dynamic braking (Snubber Resistor) disabled (H.017=OFF), the deceleration time may be extended to prevent a high bus voltage (HU) fault from occurring.

P.003 Minimum Speed

This parameter limits the speed reference to the drive. Regardless of what speed reference is supplied, the regulator will not command a speed less than the value in P.003.

Parameter Range: 0.5 to P.004 Maximum Speed (V/Hz)
0 to P.004 Maximum Speed (vector)

Default Setting: 38 Hz (V/Hz)
2280 RPM (vector)

Parameter Type: Tunable

Refer also to parameters: P.004 Maximum Speed

⚠ WARNING
THE DRIVE CAN OPERATE AT AND MAINTAIN ZERO SPEED. THE USER IS RESPONSIBLE FOR ENSURING SAFE CONDITIONS FOR OPERATING PERSONNEL BY PROVIDING SUITABLE GUARDS, AUDIBLE OR VISUAL ALARMS, OR OTHER DEVICES TO INDICATE THAT THE DRIVE IS OPERATING OR MAY OPERATE AT OR NEAR ZERO SPEED. FAILURE TO OBSERVE THIS PRECAUTION COULD RESULT IN SEVERE BODILY INJURY OR LOSS OF LIFE.

Note: *In V/Hz regulation, the drive may decrease the output frequency below P.003 (but not below 0.5 Hz) to avoid an overcurrent fault.*

P.004 Maximum Speed

This parameter limits the speed reference to the drive. Regardless of what speed reference is supplied, the regulator will not command a speed greater than the value in P.004.

Parameter Range: 15.0 Hz to H.022 Overfrequency Limit (V/Hz)
10 RPM to U.017 Motor Top Speed (vector)

Default Setting: 60.0 Hz (V/Hz)
3600 RPM (vector)

Parameter Type: Tunable

Refer also to parameters: P.028 Speed Display Scaling
H.022 Overfrequency Limit
U.017 Motor Top Speed

⚠ WARNING
THE USER IS RESPONSIBLE FOR ENSURING THAT DRIVEN MACHINERY, ALL DRIVE-TRAIN MECHANISMS, AND APPLICATION MATERIAL ARE CAPABLE OF SAFE OPERATION AT THE MAXIMUM OPERATING SPEED OF THE DRIVE. OVERSPEED DETECTION IN THE DRIVE DETERMINES WHEN THE DRIVE SHUTS DOWN. FOR VECTOR REGULATION, THIS IS FACTORY SET TO 130% OF MAXIMUM SPEED. FOR VOLTS/HERTZ REGULATION, THIS IS FIXED AT THE FREQUENCY LEVEL SET IN PARAMETER h.022 (OVERFREQUENCY LIMIT). Failure to observe this precaution could result in bodily injury.

For V/Hz regulation, this parameter specifies the maximum allowed speed in hertz. The drive is equipped with configuration overspeed protection at the frequency level set in H.022 (Overfrequency Limit).

For vector regulation, this parameter specifies the maximum allowed speed in RPM. The drive is equipped with fixed overspeed protection at 130% of Maximum Speed.

P.005 Current Limit

This parameter provides the means to limit motor stator current while running at constant speed or during acceleration.

Parameter Range: 50 to 110%* (V/Hz)
U.006 to 150% (vector)

Default Setting: 100% (V/Hz)
140% (vector)

Parameter Type: Tunable

Refer also to parameters: P.095 Power Module Output Amps
H.002 Motor Nameplate Amps
U.004 Motor Nameplate Amps
U.006 Magnetizing Current Percent

*For M/N 125R4140, the maximum Current Limit setting is 100% when P.047 = 8 kHz carrier frequency.

For V/Hz regulation: Current limit is set as a percentage of the Power Module rated amps with a maximum value of 110% current limit equals the current value in parameter P.095 (Power Module Output Amps).

When the output current attempts to exceed the preset current limit, the output voltage and frequency will be lowered as the drive reduces output current.

For vector regulation: Current limit is a percentage of the value entered in U.004.

The output current will be limited to the current limit value, which may result in motor speed decreasing or the acceleration/deceleration time being extended.

P.006 Second Menu Password

This parameter is used to enable/disable access to Second Menu General (P), Vector (U), Volts/Hertz (H), and RMI (r) parameters.

Parameter Number: P.006

Parameter Range: 0 to 9999; 107 = PASSWORD

Default Setting: N/A

Parameter Type: Tunable

Refer also to parameters: N/A

Note: *If the password is entered to enable access to the Second Menu parameters, the password must then be re-entered to disable access.*

Second Menu Parameters

The second Menu contains parameters used for more complex applications. Within the Second Menu are General (P.---) parameters that apply to both vector and V/Hz programming and Vector (U. --) or volts/Hertz (H .---) parameters. If an optional RMI board is installed in the drive, RMI (r. ---) parameters are also contained in the Second Menu. (A detailed description of RMI parameters can be found in the RMI instruction manual, D2-3341 which ships with the drive.

Access to the Second Menu parameters is enabled/disabled using the Second Menu Password parameter (P.006).

Access to the Second Menu parameters is enabled/disabled using the Second Menu Password

Entering the Second Menu Password

The second Menu Password parameter (P.006) is used to enable/disable access to the Second Menu parameters. When access is disabled, the Second Menu parameters cannot be displayed or changed (refer to Figure 25). To enable access, a factory-set password is entered into P.006. Access to the Second Menu parameters will then remain enabled until the password is entered into P.006 again.

Follow the steps shown in Figure 25, to enter the Second Menu Password.

Figure 25 – Entering the Second Menu Password

Step 1. Press the PROGRAM key until the PROGRAM LED turns on to enter program mode.

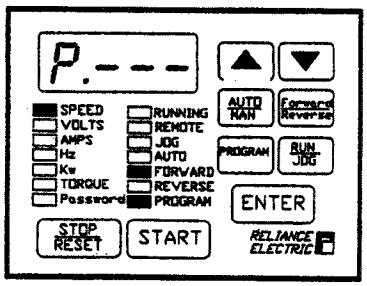

If P.--- is not displayed, press the ↑ key or the ↓ key until it is.

Step 2. Press the ENTER key.

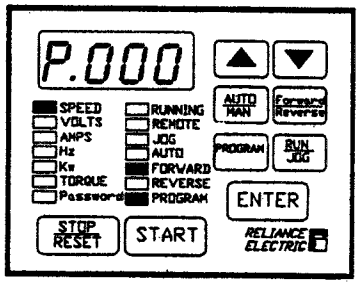

The first parameter number in the First Menu General parameters (P.000) or the last parameter number accessed will be displayed.

Step 3. Press the ↑ key to increment the parameter numbers until P.006 is displayed.

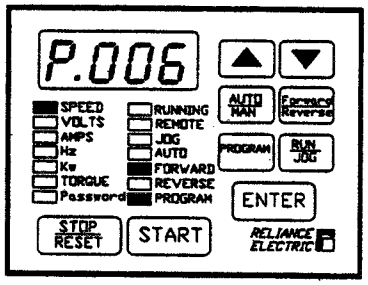

NOTE: *If you are able to display parameter P.007, access to the Second Menu is enabled. Continue with this procedure only if you wish to disable access to the Second Menu.*

Step 4. Press the ENTER key to access the parameter.

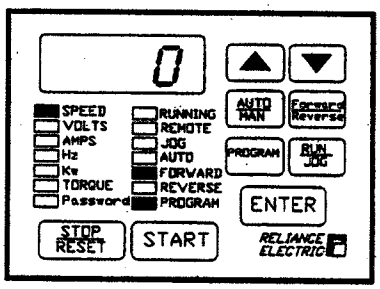

Zero will be displayed.

Step 5. Press the ↑ key to increment the value until 107 is displayed. This is the password. (Holding down the ↑ key will increase the scroll speed.)

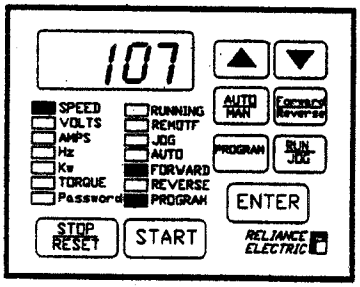

Step 6.	Press the ENTER key to select the password.	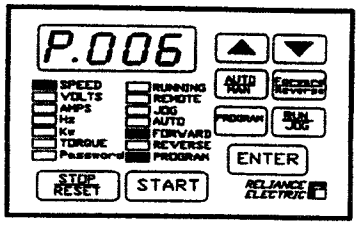	P.006 is displayed.
Step 7.	Press the ↑ key to verify the access status.	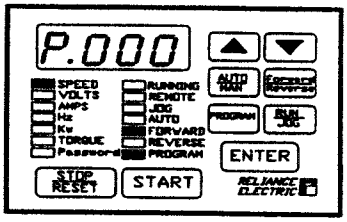 Access disabled 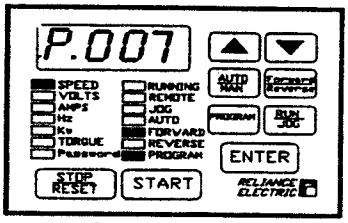 Access enabled	

To prevent unauthorized password use, a zero value (not the saved password number) is displayed whenever this parameter is accessed.

AFDB Field Accessible Parameters

Number	Name	*Type	Setpoint
P.000	Control/Source	C	RE
P.001	Accel Time 1 (ramp 1)	T	8.0 sec
P.002	Decel Time 1 (ramp 1)	T	18.0 sec
P.003	Minimum Speed	T	2280 RPM (38 Hertz)
P.004	Maximum Speed	T	3600 RPM (60 Hertz)
P.005	Current Limit	T	140%
P.006	Second Level Password	T	107

***Type = C (Configuration)**
T (Tunable)

AFDB Non-Field Accessible Parameters

The remaining parameters P.007 to P.099: U.000 to U.048: R.001 to R.066 are non-field accessible and read only if the Passwords are turned on in P.006 and P.051.

Of these parameters the following need these specified default values.

No.	Parameter Name	Parameter Type	Default Value
P.009	Terminal Strip Analog Input Offset	T	-213
P.010	Terminal Strip Analog Input Gain	T	1.25
P.011	Terminal Strip Analog Input Configure	C	2.0
P.027	Forward/Reserve Configuration	T	1
P.042	Line Dip Ride - Through Time	C	500 ms
P.048	Vector Regulation	C	VEC
P.051	Programming Disable	T	26
P.052	Auto/Main Key Disable	T	ON
P.055	Stop/Reset Key Disable	T	OFF
U.001	Encoder PPR	C	SE
U.012	Speed Regulator Proportional Gain	T	10.0
U.013	Speed Regulator Integral Gain	T	2.0
r.030	Digital Input Configuration	C	0
r.035	Relay Output 1 (N0) Configuration	T	9
r.036	Relay Output 2 (N0/NC) Configuration	T	1
r.037	Relay Output 2 (N0/NC) Configuration	T	3

Of these parameters the following will be down loaded based on compressor motor amps at Full (100%) load.

No.	Parameter Name	Parameter Type
P.028	Speed Display Scaling	T
U.002	Motor Poles	C
U.003	Motor nameplate Base Frequency	C
U.004	Motor Nameplate Amps	C
U.005	Motor Nameplate RPM	C
U.006	Magnetizing Current	C
U.007	Motor Nameplate Volts	C
U.016	Field Weakening Start RPM	C
U.017	Motor Top Speed	C
U.018	AC Line Volts	C
U.022	Motor Nameplate Horsepower	C

(15) Troubleshooting Using Error Codes

The drive can display two kinds of error codes, alarm and fault codes, to signal a problem during self-tuning or drive operation. Fault and alarm codes are shown in Tables 15 - 18. A special type of fault code, which occurs rarely, is the fatal fault code.

An alarm is signified by a two-or three-letter code flashing on the display. The drive will continue to operate during the alarm condition. The user should investigate the cause of the alarm to ensure that it does not lead to a fault condition. The alarm code will remain on the display only as long as the alarm condition exists. The alarm will automatically be cleared when the condition causing it is removed.

A fault condition is also signified by a two-or three-letter code flashing on the display. In the case of a fault, the drive will not continue to operate, but will coast to stop. The RUNNING LED will turn off when this happens. The first fault that occurs will be maintained flashing on the display, regardless of whether other faults occur after it. The fault code will remain on the display until it is cleared by the operator using the STOP/RESET key, or the fault reset input from the control source selected in P.000.

The drive automatically stores all subsequent fault codes that may occur in the system error log, which is accessible through the keypad, the OIM, or the CS3000 software. Using the keypad, the error log can be accessed in program mode after moving through all the parameter menus. There is no visual indicator that other faults are in the log, or that the log is filled and no more errors can be logged. The user must access the error log to view the other faults that occurred and should clear it often.

A maximum of ten fault codes can be stored in the log. The last fault that occurred is the first one to appear on the display when accessing the error log. The last fault will be identified with the highest number (up to 9).

The first fault that occurred will appear as the last one in the log. The number 0 will identify the first fault.

For each entry in the error log, the system can also display the day and time that the error occurred. The day data is based on a relative 247-day counter (rolls over after 247.55). The time is based on a 24-hour clock. The first two digits of the clock data represent hours. The last two digits represent minutes. The clock can be reset using P.030 (Elapsed Time Meter Reset).

All the entries in the error log and the day and time data will be retained, even if power is lost. If the error log is full, more entries can be added by the system only if the log is cleared. To clear the error log press the ↓ key while you are viewing any entry in the log until the display shows **CLr.**
Press ENTER to clear the error log. All entries will be cleared. For more information, refer to pages 5-6 and 5-7 of Section 5.3 of the Reliance instruction manual, D2-3410 that ships with the drive.

Identifying Alarm Codes and Recovering

Drive alarm codes are shown in Table 13. Note that the alarm code will only be displayed for as long as the problem exists. Once the problem has been corrected, the alarm code will disappear from the display.

Table 13 - List of Alarm Codes

Code	Alarm Description	Alarm Cause	Corrective Action
I-Ac	V/Hz identification procedure active	V/Hz identification procedure is enabled and in progress	1. Allow identification procedure to finish. 2. Press keypad STOP/RESET to cancel identification procedure if desired.
I-En	V/Hz identification procedure enabled	H.020 = On; V/Hz identification procedure has been enabled but not started	1. Proceed with V/Hz identification procedure, start drive and allow procedure to begin. Display will change to I-Ac when drive is started. 2. Change H.020 to OFF to cancel identification and clear I-En if desired.
LIL	Low AC input line	AC input line is low	1. Adjust line voltage parameter (H.021) to match actual AC line voltage.
PSEn	Power-up start sequence enabled.	P.054 = On; power-up start sequence has been enabled.	1. Allow power-up start sequence to finish.
S-Ac	Vector self-tuning active	Vector self-tuning is enabled and in progress	1. Allow vector self-tuning procedure to finish. 2. Press keypad STOP/RESET to can vector self-tuning procedure if desired.
S-En	Vector self-tuning enabled	U-.008 = On; vector self-tuning has been enabled but not started.	1.Proceed with vector self-tuning, procedure to begin. Display will change to S-Ac when drive is started. 2. Change U.008 to OFF to cancel self-tuning and clear S-En if desired.

Identifying Fault Codes and Recovering (Continued)

Fault Codes are shown in Tables 14, 15, 16 and 17.

Table 14 - List of Fault Codes (Continued)

Code	Fault Description	Fault Cause	Corrective Action
bYC	DC bus charging bypass contactor	Charging bypass contactor not closed at line voltage ON.	Check for loose connections on ribbon cables between Regulator and Bus Control boards, and between Power Module Adapter and Bus Control boards. Also, measure/check DC Bus voltage.
CHS	Default parameter restore (checksum error)	During drive operation: Regulator board failure.	Contact Trane Service or replace Regulator board.
		After Regulator board replacement:	Contact Trane Service.
EC	Earth current failure (ground fault)	Unintentional grounding.	Check isolation between ground and output terminals. Possible leakage, current sensor defects; replace sensor.
EEr	NVRAM write failure	Failure on write to non-volatile memory, bad NVRAM.	Connect CS3000 software to upload parameters. Then replace Regulator board. Parameter values will be lost when power is cycled.
EL	Encoder loss	Drive is not detecting feedback from the encoder.	Check the connection between the encoder and the drive. Check the encoder/motor coupling.
FL	Function loss	Function loss input on control terminal is opened	Check external interlocks at terminals 16, 20.
Hld	High time identification aborted	Identification process for V/Hz has been aborted.	See H.019 for identification result.
HIL	High line voltage	Input voltage more than 15% above configured value. (Note that this is not tested for in 1-150 HP Power Modules configured for vector control).	Check actual line voltage against U.018 or H.021.
HU	High DC bus voltage	DC bus voltage too high (capacitor protection).	Check input line voltage; if necessary, add transformer.
		Deceleration time too short	Check input line voltage; if necessary, add transformer.
IPL	Input phase loss	Voltage ripple on DC bus due to missing input phase or an imbalance between phases.	Verify that proper voltage is being applied to the drive. Check all phases.
LIL	Line input low (V/Hz)	AC powers supply interrupt or line dip. Alarm at ride through status.	Drive will continue to run after line voltage is restored. Check value of Line Voltage (P.044, U.018 or H.021). Check input voltage for dip. At high three-phase line reactors.

Identifying Fault Codes and Recovering (Continued)

Table 15 - List of Fault Codes (Continued)

Code	Fault Description	Fault Cause	Corrective Action
LU	Low DC bus voltage	DC bus voltage too low. Line dip too long (P.042).	Check input voltage, line fuses. If necessary, add transformer. Check value of Ride Through Time (P.42), Line Voltage (H.021, U.018).
nCL	Network comm loss	Communications with the AutoMax network have been lost.	Check network cabling from network master to network option board. Check that network master is operating properly.
nId	Identification Request not yet performed (V/Hz only)	Drive started but Identification Result = Zero.	Reset fault. Perform Identification Request. Restart drive.
OC	Overcurrent (steady state). Trips at 137% load (based on inverter type current) check Power Module rating.	Output phase-to-phase short.	Check isolation between each output line.
		Bus voltage line-to-line.	Check transistor modules for correct output. If incorrect, possible board defect; replace. Possible Hall effect current sensor defective; replace.
		Ground fault.	Check isolation between ground and output terminals. Possible leakage current sensor defect; replace sensor.
		Momentary overload	Check for motor overload; reduce load on motor.
		Bad Motor	Check motor for overload; reduce load on motor.
		Torque boost/V/Hz too high (V/Hz).	Check parameters H.001, H.002, and/or H.003. Enable Identification Request (H.020).
		Parameter settings (vector)	Check Encoder PPR (U.001), Motor Poles (U.002), Base Frequency (U.003), Motor Nameplate Amps (U.004), Magnetizing Current (U.006), Speed Regulator Prop. Gain (U.012).
		Encoder wired incorrectly, wrong PPR	Check encoder wiring. Perform vector self-tuning.

Identifying Fault Codes and Recovering (Continued)

Table 16 - List Fault Codes (Continued)

Code	Fault Description	Fault Cause	Corrective Action
OCA	Overcurrent (at acceleration)	Acceleration time too short.	Increase encoder acceleration time (P.001, P.017, P.021).
OCb	Overcurrent (at DC braking)	DC voltage too high.	Check parameters H.006, H.007
OCd	Overcurrent (at deceleration)	Deceleration time too short.	Increase deceleration time (P.002, P.018, P.022).
OF	Overfrequency	Drive has exceeded max allowable output frequency. Regenerating energy is too high. Stability or slip compensation circuit adds freq. Ref. If H.016 ON, searching current is too high. Motor is too small.	Vector: check parameters Encoder PPR (U.001), Motor Poles (U.002), Base Frequency (U.003).
			V/Hz: check DC bus voltage; increase decelerating time. Check values Maximum Speed (P.0004) / Overfreq. (H.022). Check slip compensation (H.004). If H.016 ON, check motor size versus Power Module Size, recheck setting of P.005 (too high).
OH	Drive overtemperature	Cooling fan failure.	Check ambient temperature, cooling fan, and minimum clearances around drive.
OL	Motor overload	Excess motor current. V/Hz: Torque boost too high, therm. Overload level too low.	Vector: Check actual/Motor Rated Nameplate Amps (U.004). V/Hz: Check actual current/Torque Boost (H.003). Check that power Module is sized correctly. Reduce load on motor (e.g. at low frequency).
		Excess load on motor, e.g., at too low speeds	Check that Power Module is sized correctly. Reduce load on motor (e.g., at low frequency).
		Loss of phase connection	Check output lines to the motor.
OPL	Motor output phase loss	Phase lost between drive and motor.	Check connections and cable of all 3 phases and motor windings. Replace any damaged cable.

Identifying Fault Codes and Recovering (Continued)

Table 17 - List of Fault Codes

Code	Fault Description	Fault Cause	Corrective Action
OSP	Overspeed (Vector only)	RPM above 130% Maximum Speed (P.004), speed regulator response not optimized.	Check encoder PPR (U.001), Motor Poles (U.002), Base Frequency (U.003), Motor Nameplate RPM Speed (U.005). Check Reg. Proportional (U.012) Integral Gain (U.013)
Puc	Missing Power Module ID connector	Bad or disconnected cable between Regulator and Power Module.	Check cables between Regulator board and Power Module
PUn	Power Module not identified	Drive parameters have been restored to power-up defaults. Regulator has not been configured to match Power Module.	Power Module must be configured by Trane service personnel.
PUo	Drive power electronic overload	Power Module overloaded. Too high DC Braking Voltage (H.007) or Torque Boost (H.003).	Check load to Power Module. Check Power Module sizing versus application. Check DC Braking Voltage value (H.007). Check Torque Boost (H.003).
SF	Self-tuning status (Vector only)		See parameter U.009
SrL	Communication loss between Regulator/PC/ OIM	Serial port communication cable, PC or OIM communication port setup.	Check connection cable and communication port setup.
UAr	Spurious host PC comm interrupt	Regulator board failure.	Replace Regulator board.
UbS	Asymmetrical bus charge	Bad Power Module	Contact Reliance.

Error Log

Note that you cannot clear a single entry from the error log. The entire log, including all of the fault codes and the day and time stamp of each fault will be cleared simultaneously using this procedure. See Figure 26.

Figure 26 - Accessing, Reading, and Clearing Faults in the Error Log

Step 1. Press the PROGRAM key. The First Menu General parameters are displayed. The PROGRAM LED will turn on.

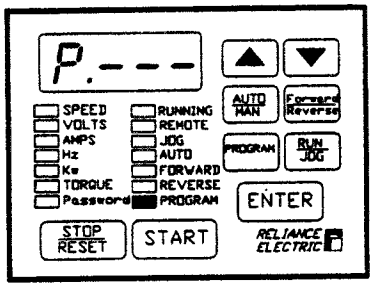

Step 2. Press the DOWN ARROW key until Err is displayed.

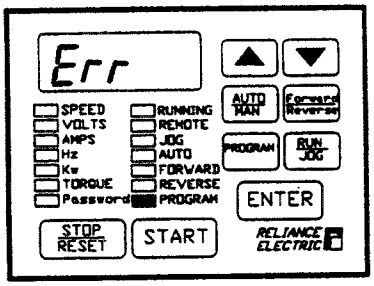

Step 3. Press the ENTER key. If no faults have occurred, Err will be displayed again. If only one fault has occurred, the fault code will be displayed as the first entry in the log. If more than one fault has occurred, the first entry is the latest fault that occurred.

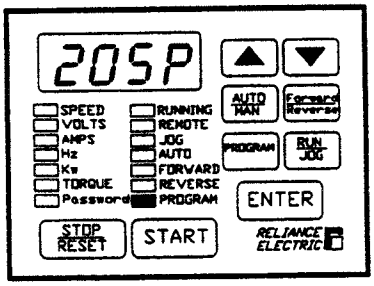

Step 4. Press the UP ARROW key or the DOWN ARROW key.

The display steps through the error log entries, which are numbered 0-9 (maximum).

Step 5. Press the ENTER key. The display shows the day stamp, which can range from 0-248 days.

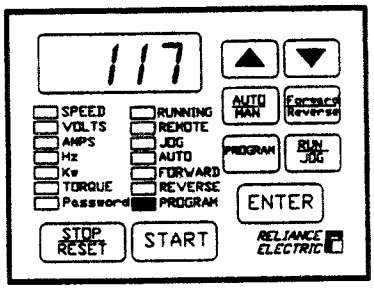

Step 6. Press the DOWN ARROW key. The display shows the time stamp, which is based on a 24-hour clock. Use the arrow keys to move between the day and time data.

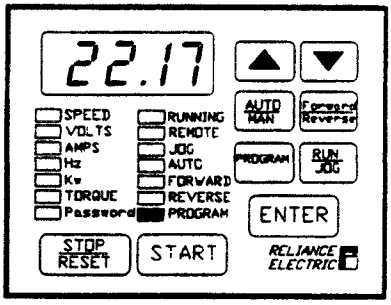

Step 7. Press the PROGRAM key, which displays the error log entries again.

The display shows the error log entry viewed prior to or associated with the last viewed time stamp.

Step 8. Repeat steps 4-7 for each additional error log entry to view the the time and date for each error log entry.

Step 9. When you have viewed all the entries, you should clear the error log. Press the DOWN ARROW key while you are viewing any entry in the log until the display shows CLr. Press ENTER to clear the error log. All entries will be cleared.

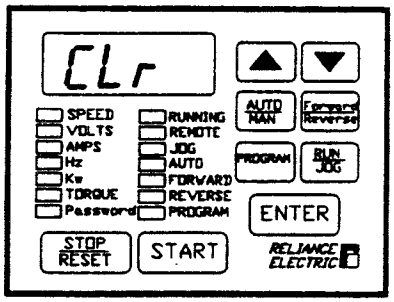

Step 10. Err will be displayed again to indicate that the log is empty.

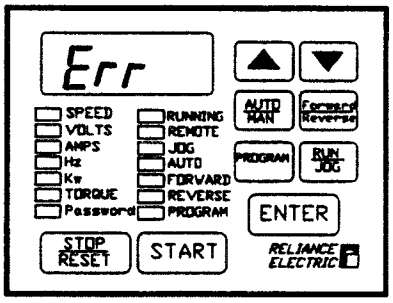

Step 11. Press the PROGRAM key to access program mode again.

Recovering from Fatal Fault Codes

The letter **F** preceding the code distinguishes fatal fault codes. They normally indicate a malfunction of the microprocessor on the Regulator board. In some cases, fatal fault codes can be reset and the drive can be re-started. Table 18 lists the fatal fault codes, which can be reset. If any other fault code appears on the display, you will need to replace the Regulator board.

Table 18 - Fatal Fault Codes that can be Reset

Code	Fault Description	Fault Cause	Corrective Action
F 3	Encoder power-up	Encoder voltage is less than 10 V.	Turn off power to the drive. Disconnect the encoder wiring from the terminal strip. Turn power to the drive back on. If the F3 error does not occur again, the problem is in the wiring between the drive and the encoder. If the F3 error does occur again, the problem is in the Regulator board which should be replaced.
F 60	Option port identification error	The option board could not be identified by the regulator.	Check the ribbon cable between the Regulator board and the option board. For M/N 50R41xx, 50T41xx, 75R41xx, 75T41xx, and 125R41xx drives, check the option port jumpers on the option board. Refer to the appropriate option board instruction manual for more information about the option board.
F 61	Option board power-up diagnostic failure	Option board has failed one or more power-up diagnostics.	Check the ribbon cable between the Regulator board and the network option board. Replace the option board if necessary. Refer to the appropriate option board instruction manual for more information about the option board.
F 62 or F 26	Option board runtime error.	During operation, the option board watchdog failed or handshaking with the drive failed.	If intermittent, check for causes of noise, for proper grounding, and that outputs are not exceeding rated current capacities. Replace the option board if necessary. Refer to the appropriate option board instruction manual for more information about the option board.

(17) AFDB Cooling Circuit

1. List of Serviceable Parts

The cooling circuit consists of two loops. Figure 27 of the Schematic for the cooling circuit shows the primary and the secondary loops as well as the Pressure Switch.

Figure 27 – Schematic of the Cooling Circuit

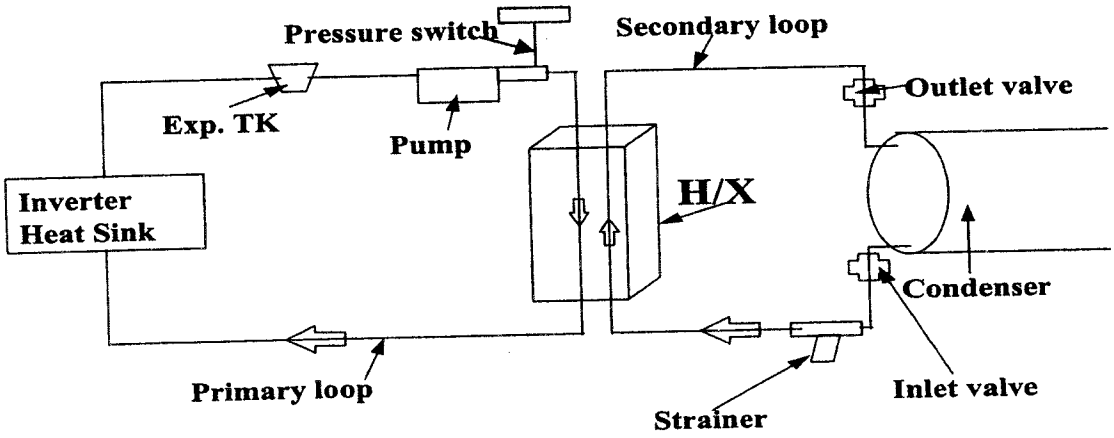

The following main parts are present in the cooling circuit for the unit mounted inverter.

1. Cooling loops-hoses
2. Pump
3. Brazed plate heat exchanger
4. Strainer

The details of these parts are shown below.

2. Part Details

Hose Details

Type	Hydraulic Hose Synthetic Rubber with Double Wire Braid-Reinforcement
Hose I.D.	.75 inch
Hose O.D.	1.10 inch
Hose I.D.	1.0 inch
Hose O.D.	1.42 inch
Max Oper.	500 psi
Min. Burst	10000 psi
Min. Bend Radius	6 Inches
Oper. T Range	-40°F to +212°F

(17) AFDB Cooling Circuit

2.1 Pump Details

Type	Regenerative Turbine Pump, close coupled
Liquid	Distilled Water plus Inhibitor
Suction	3/4" NPT
Discharge	3/4" NPT
Max T	230F
Max sys P	300 psi
Flow	5 gpm
TDH	97 ft
Rated BHP	0.25 hp
NPSHrequ	6 ft
Impeller	Bronze
Cover	Bronze
Shaft	316SS
Motor Bkt	Bronze
Seal	
O-rings	EPR
Motor bearing	

2.3 Motor Data

HP	1/3
RPM	3450
Voltage	115/230
Phase	1
Hertz	60
Enclosure	Open Drip Proof
Frame	56
Thermal overload protection built in to motor	
Agency Certification	UL

2.4 Heat Exchanger Details

Type	Brazed Plate
Plates/Connections	AISI 316 SS
Solder	Copper
Max P	450 psig
Max T	365 °F

2.5 Standard Operating Conditions 350-600 HP

	Condenser Side	Inverter Side
Flow Rate	5 GPM	5 GPM
Calculated Pressure Drop	091 psi	2.44 psi
Fluid	Cooling Tower Water	Distilled Water + Inhibitor
Connections	3/4" NPT	3/4" NPT

2.5.1 Standard Operating Conditions 1000 HP

	Condenser Side	Inverter Side
Flow Rate	4.75 GPM	8.00 GPM
Calculated Pressure Drop	0.74 psi	2.24 psi
Fluid	Cooling Tower Water	Distilled Water + Inhibitor
Connections	1" NPT	3/4" NPT

2.6 Strainer Details

Type	Y-Type Strainer
Material	Bronze Shell
Filter Screen	Stainless Steel
Mesh Size	20 Mesh
Size	1.5-Inch Diameter

3. Recommended Service Procedures

3.1 Service Requirements during Normal Operation

The only components in the cooling circuit that can be monitored during operation are the cooling loops. All other components can be serviced only after the unit is shut down. Therefore, regular maintenance and service procedures for all other components are described in the section titled "Service requirements during shutdown".

3.1.1 Inhibitor Solution for Primary Loop

In order to prevent corrosion in the primary loop, an inhibitor solution must be used. The solution shall be a mixture between 5000ppm to 13000ppm of inhibitor solution and distilled water. Mixing concentration shall be (3) oz. of concentrated inhibitor solution (shipped in a bottle with unit) to the primary water loop of distilled water for 350-600 HP sizes. The 1000 HP uses a different inhibitor and a different concentration. The inhibitor solution shall be mixed to the proper concentration prior to filling the primary loop. If necessary to replace/purchase inhibitor solution contact the local Trane Parts office.

3.1.2 Cooling Loops

It is essential that the amount of cooling medium be maintained in the primary and secondary loops. The amount of cooling medium in the primary loop can be monitored by the level of the ball in the expansion tank sightglass. This ball will be at the center of the sightglass when the level of the cooling medium in the expansion tank is sufficient. The loop holds 1-3 gallons of water; care needs to be exercised that the loop is not overfilled. Therefore, it is essential that the ball in the sightglass is visible. The level of the cooling medium in the cooling loop must be monitored at periodic intervals (not to exceed 2 months) by ensuring that the ball in the sightglass is visible. The level of the cooling fluid may be decreased by draining through the valve at the back of the inverter. The coupling at the top of the expansion tank is used as the fill point.

No special maintenance procedures are needed for the secondary loop. Water flow through the secondary loop is automatic. Debris in the cooling water tower is removed by the strainer. The cleanout procedures for the strainer are described in a later section.

3.1.3 Cooling Loop Pump Operations

The primary loop must be filled in such a way that will always keep the pump seal surrounded by water. To fill the primary loop, remove the water fill connection and bleed connection at the top of the expansion tank. Fill the primary loop with the inhibitor solution until the ball in the expansion tank sight glass floats. When the chiller is first started, watch the ball in the expansion tank sight glass and fill immediately when the inhibitor solution level decreases. The unit should be run for several minutes to allow air to be removed from the primary loop.

CAUTION
DO NOT OPERATE THE PUMP WITHOUT WATER. Failure to operate the pump without water may result in the seal being permanently damaged.

3.2 Service Requirements during Shutdown

The unit must be shut down using shutdown procedures described in the literature. Prior to performing any service on the secondary loop, the isolation valves on the condenser must be closed end, the cooling tower pump must be shut off.

3.2.1 Cooling Loops

The primary loop of the inverter cooling circuit shall be charged with the inhibitor solution during normal operation of the inverter. **If the chiller is in an unconditioned mechanical room during shutdown periods, the primary loop needs to be drained of tap water, blown out with and refilled with a 100% propylene glycol solution. Normal shutdown procedures used with the condenser need to be followed for the secondary loop.**

Draining and refill procedure

Opening the valve at the back of the inverter drains the primary loop. The coupling on top of the expansion tank is used for filling. It is recommended that the pump be run for approximately two minutes after the charging. The cap on the charging process (on top of the expansion tank must be opened to let out any air in the system.) The charging process may be stopped when the ball in the sightglass is visible at the center of the sightglass indicating the proper level of the glycol.

Checking cooling loop integrity

Some situations will require that the hoses be disconnected at the connections. In these situations, teflon pipe sealant must be applied on the threads of all mating parts before they are assembled. Leaks in the cooling loop must be avoided since they can lead to reduction in the inverter life. Therefore, it is essential that the loops be tested for leak each time they are disconnected at any joints or connections. Once the loop has been filled with the coolant medium, they should be tested for leaks by applying liquid soap on the exterior surface of hoses and the connections. It is recommended that the cooling pump be running at the time of the test since this will detect leaks that occur during water flow but are absent in a static situation. The hoses must be replaced if the leak is substantial. If there is leaks at the fittings, these fittings must be disconnected, re-threaded and tested again. Teflon pipe sealant must be applied if needed. If the leak continues, the fittings will need replacement. REFER TO CVHE-IN-3B, DISSASSEMBLY AND REASSEMBLY MANUAL, FOR ADDITIONAL INFORMATION.

3.2.2. Pump (See Pump Manual Section on Maintenance and Service)

3.2.3. Heat Exchanger

The heat exchanger can be serviced only after the unit is shut down. The heat exchanger is susceptible to two mechanisms, which can cause reduction in the performance of the unit: fouling and corrosion. Some basic concepts on these two mechanisms are explained below:

3.2.3.1. Fouling

Fouling in brazed plate heat exchangers can be classified into two types based on the effect that they have on the heat exchanger.

Pressure Drop Fouling

This is caused by fibers or other particles (<1 mm) getting stuck in the plates of the heat exchanger. This can be more of a problem in units connected to cooling towers exposed to environments containing airborne particles such as dust and cottonwood seeds. This issue has been addressed with the strainer in the secondary loop. The primary loop contains **distilled water** , which is not expected to have solid particles in it. However, backflushing is a method, which can be used to address this situation. For backflushing, disconnect the inlet and outlet connections, connect the inlet connection to the drain and the outlet connection to a city water connection and flush the heat exchanger with city water for 2-3 minutes. Please note that the city water pressure should not exceed 150 . psi.

I. Surface Fouling

One or more of the following can cause surface fouling: Sticky products such as oil and grease.

In situations where this is an issue, ***commercial detergents such as P3 T6560 from Henkel may be used. Laundry detergents or dishwashing detergents must be avoided. However, if they are the only alternative, a water treatment specialist needs to be consulted before usage.***

II. Scaling

Solubility of salts such as copper sulfate in water decreases with increase in water temperature. This can be a problem in high temperatures. This is not expected to be a problem in temperatures of less than 45°F, which is the case in this application. Scaling can be removed by backflushing with dilute (5%) solutions of sulphamic acid, phosphoric acid and citric acid (NEVER USE HYDROCHLORIC ACID, SULFURIC ACID OR MURIATIC ACID). It is recommended that a concerned user consult a water treatment specialist.

III. Algae, Fungi or Bacteria

Algae cannot grow in regions where there is no light. However, they may grow in cooling towers, which are open to light. Danger of algae growth may be reduced by treating the cooling towers with algaecide (AVOID BIOCIDES OR ALGAECIDES WITH CHLORIDES). In this application, the issue has been further addressed through the strainer, which will filter any algae present in the secondary loop.

Bacteria and fungi can attack sulfates causing sulfuric acid, which would consequently lead to sulfuric acid corrosion. They can also feed on nitrogen or phosphor to form slime. Bacteria are also known to feed on iron present in water forming a viscous mass of oxide. All these occurrences will cause a reduction in heat transfer capability accompanied by an increase in pressure drop. ***Chlorophenols, potassium permanganate, sodium dichromate or sodium chromate can be used to clean the system in cases where bacterial or fungal presence in the water is anticipated. Chlorine usage is strongly discouraged since it will cause pitting of the heat exchanger surface.***

IV. Deposits of Sand

This is sometimes found in cooling tower water. Sand may accumulate in the heat exchanger plates at very low velocities. This is not a concern in this application since the heat exchanger is designed for high velocities in the channel. Also, the strainer will filter out particles less than 1/32" in diameter.

V. Barnacles or Larvae

This is a concern only in brackish or seawater. ***This application is not designed for this type of water and must not be used with seawater, river water or brackish water***

3.2.3.2 Corrosion

The heat exchanger used in the application is stainless steel which is resistant to pitting and micro-galvanic corrosion in most conditions of operation. However, one can never do enough to completely prevent corrosion. Therefore we have provided guidelines for water quality that would minimize the risk of corrosion and fouling. ***It must be noted that the heat exchanger and components of the cooling loops must be cleaned and rinsed without fail immediately after shutdown.***

In addition, corrosion of copper components can be reduced if the pH of the water is maintained between 7.5 and 9.0, oxygen content is maintained below 0.1 PPM. Compounds such as hydrogen sulfide, ammonia and compounds with chlorides must be avoided at all costs in the cooling loops. Water containing hydrazine is very good for prevention of corrosion of iron and copper. It must be noted that ammonia cannot be used in cooling tower water for this application.

Recommended concentration limits for impurities in water to prevent microgalvanic corrosion of unalloyed or galvanized iron is mentioned in Table 19. It must be noted that these values are only recommended values and cannot be considered as guarantees. Water quality specialists should be consulted for ultimate authority.

Table 19 - Concentration Limits of Impurities in Water

Ph SO_4- Total hardness Fe^{3+}	7.5-9.0 <90 PPM 4.0-8.0 dH <0.3 PPM
H_2S $PO_4^{\ 3}$ NH_3 HCO_3-/SO_4	<50 ppb <2.0 PPM <0.5 PPM >1.25
Cl- Temperature Oxygen content Total dissolved solids Free chlorine	<100 PPM <45°C <0.1 PPM 500 ppm of $CaCO_3$ <0.4 PPM

3.2.4 Strainer

The strainer will catch all the debris that the cooling tower water has that is larger than 1/32" in diameter. This strainer is cleanable and cleaning is recommended every 1-3 months in order to avoid clogging of the filter screen. Clogging of the filter screen will cause reduction in flow through the heat exchanger, which will in turn increase the temperature of the water flowing through the inverter. The screen of the strainer can be removed from the shell by unscrewing the nut on the leg of the Y strainer. This can only be done after the isolation valves on the inlet and

outlet of the heat exchanger are closed and the unit is shut down. The refrigerant charge can remain in the unit during the clean out procedure. Cleanout of the screen can be done with tap water or **distilled water.** Oils or other lubricants should not be used. Commercial cleaners may be used but they must be thoroughly removed from the screen before the screen is put back into the shell. Cleaners which remain on the screen may go on to the heat exchanger and cause scaling or corrosion and therefore must be thoroughly rinsed.

(18) AFDB Startup Procedure

THE WATER COOLED ADAPTIVE FREQUENCY DRIVE IS UNIT MOUNTED ON A CVHE/F/G UNIT. IT IS COMPLETELY FACTORY INSTALLED AND PROGRAMMED. THE FOLLOWING PROCEDURES SHOULD BE FOLLOWED WHEN STARTING THE WATER CHILLER AND DRIVE.

1. The CenTraVac® control panel (UCP2) is the prime controller and is used to start, stop and monitor all unit and AFDB run functions.

   1.1. Complete all The Commissioning Checklist and Start-up procedures for the CVHE/F/G as called out in the operation maintenance manual CVHE-OM-8 or other applicable manual.

   1.2. Complete the "CenTraVac Adaptive Frequency Drive Startup Log" located in this section.

2. Check the following on the drive:

   2.1. 460/480 volt input wiring to the drive is sized correctly and hooked up as noted in this manual.

   2.2. Check the drive ground connection as detailed in the "Wire Routing" Section (5) of this manual, check cabinet wire routing and grounding. A suitable grounding conductor unbroken must be run from the cabinets ground stud to the motors ground terminal (factory connected) and then to earth ground (field) responsibility.

3. Check all drive wiring and connections in the drive to make sure they are tight and free of any shipping damage.

4. AFDB cooling circuit:

   4.1. **The primary water loop (See Figure 27) on the AFDB cooling circuit must be charged with Distilled water plus inhibitor solution prior to starting. It requires approximately 2-3 gallons of water. Fill the circuit using the connection provided on the primary circuit expansion tank. Fill the tank until the ball in the expansion tank sight glass is visible at the center of the sight glass. Because air will still be trapped in the drive after initially filling the primary loop, the following procedure must be followed to properly remove the air. If this air is not removed the pump will not function properly and the drive will overheat and shut the chiller down.**

   Leave the fill connection at the top of the expansion valve open, start the primary circuit pump by running the oil pump in the manual mode. When the water level lowers the ball in the sight glass expansion tank, refill the tank until the ball is visible in the center of the sight glass. Repeat this process until the ball remains in the center of the sight glass. The tank may need to be refilled several times before all of the air is removed from the system. Close the top of the tank after all of the air is removed from the primary side.

   4.2. Water Pump Operation. Check the water Pump operation by going to the Service Test Menu and running the oil pump in the "MANUAL" mode.

   4.3. Re-enable Password security in P.006 and P.051 to lock in the settings after completing the Program settings.

5. AFDB control checkout: Reference Section 14, "Ensuring Program Security" on AFDB field accessible parameters and non-field accessible parameters.

   5.1. Check out all setpoints in P.000 through P.006. These are general setpoints that are the same on all AFDB water-cooled drives. See Section 14, "Ensuring Program Security".

   5.2. Verify setpoints on all the remaining parameters, P.007 to P.099: U.000 to U.048 and R.1030 to R.037. See Sections 12, "Drive Status Leds" and Section 14, "Ensuring Program Security". These parameters are specific to your unit/motor combination. in the drive.

   5.3. Re-enable Password security in P.006 and P.051 to lock in the settings after completing the Program settings.

Note: *If the set values do not match, contact the La Crosse Business Unit Technical Service Department. The correct values are listed on the drive parameters settings shipped with each unit.*

6. If you are not already in the monitor mode of the AFDB Display, access it by pressing the program key until the Program LED turns off. You will then be able to press the ENTER key to advance through each of the monitor mode when the drive is running.

7. Start the drive from the UCP2 panel.

8. Check the AFDB chiller drive response to the UCP2. Initially, the drive will go to 60 hertz and stay there until the CenTraVac® vanes go wide open based on load. The drive will decrease the speed from there based on load demand.

CenTraVac® Adaptive Frequency Drive™ Startup and Operating Log

Sales Order #	Location
Model #	Drive Model #
Serial #	Drive Serial #

Prestart Checklist	✓ When Completed	Comments
Motor is Grounded		
Motor Rotation		
Verified Drive Par.Settings		
Drive Chassis Grounded		
Control Wiring & Drive Connections Tight		
Water Pump Rotation		
Distilled Water in Primary Water Loop		
Corrosion Inhibitor Installed		

UCP2 Control Settings		
Name	**Default**	**Setting**
Starter Type	AFDB	
Condenser Pressure Sensor Option	Installed	
AF Adjustable Speed Control Algorithm Enable	Enable	
AF Leaving Water Standard Deviation	1.0	
AF Pressure Coefficient Constant	800	
AF Re-optimization Factor	0.30	
AF Re-optimization Timer	24	
AF Boundary Pressure Coefficient Y Intercept	0.40	
AF Boundary Pressure Coefficient Y Intercept Maximum	2.00	
AF Pressure Error Deadband	0.030	
AF Proportional Speed Gain	50	

(P) AFDB Parameter Settings: Record Number and Setting			
Number	**Setting**	**Number**	**Setting**
1. P000		11. P010	
2. P001		12. P011	
3. P002		13. P012	
4. P003		14. P013	
5. P004		15. P014	
6 P005		16. P015	
7. P006		17. P016	
8. P007		18. P017	
9. P008		19. P018	
10. P009		20. P019	

(P) AFDB Parameter Settings: Record Number and Setting			
Number	Setting	Number	Setting
21. P020		57. P056	
22. P021		58. P057	
23. P022		59. P058	
24. P023		60. P059	
25. P024		61. P060	
26. P025		62. P061	
27. P026		63. P062	
28. P027		64. P063	
29. P028		65. P064	
30. P029		66. P065	
31. P030		67. P066	
32. P031		68. P067	
33. P032		69. P068	
34. P033		70. P069	
35. P034		71. P070	
36. P035		72. P071	
37. P036		73. P072	
38. P037		74. P073	
39. P038		75. P074	
40. P039		76. P075	
41. P040		77. P076	
42. P041		78. P077	
43. P042		79. P078	
44. P043		80. P079	
45. P044		81. P080	
46. P045		82. P081	
47. P046		83. P082	
48. P047		84. P083	
49. P048		85. P084	
50. P049		86. P085	
51. P050		87. P086	
52. P051		88. P087	
53. P052		89. P088	
54. P053		90. P089	
55. P054		91. P090	
56. P055		92. P091	

(U) AFDB Parameter Settings: Record Number and Setting			
Number	Setting	Number	Setting
1. U000		26. U025	
2. U001		27. U026	
3. U002		28. U027	
4. U003		29. U028	
5. U004		30. U029	
6. U005		31. U030	
7. U006		32. U031	
8. U007		33. U032	
9. U008		34. U033	
10. U009		35. U034	
11. U010		36. U035	
12. U011		37. U036	
13. U012		38. U037	
14. U013		39. U038	
15. U014		40. U039	
16. U015		41. U040	
17. U016		42. U041	
18. U017		43. U042	
19. U018		44. U043	
20. U019		45. U044	
21. U020		46. U045	
22. U021		47. U046	
23. U022		48. U047	
24. U023		49. U048	
25. U024			

(R) AFDB Parameter Settings: Record Number and Setting			
Number	Setting	Number	Setting
1. R030			
2. R035			
3. R036			
4. R037			

TRANE

Rockwell Automation

START-UP PROCEDURES
TRANE LIQUI-FLO VARIABLE FREQUENCY DRIVE
PRE START-UP CHECKLIST AND SERVICE REQUEST

Use this form to check for proper installation of the Rockwell Automation Liqui-Flo VFD. For start-up service, please fax this completed form to: **Rockwell Automation – LaCrosse, WI FAX: 1-608-781-7182** to schedule start-up. Please allow three weeks to arrange for start-up services.

JOB LOCATION_____INSTALLING CONTRACTOR_____

STREET_____CONTRACTOR CONTACT_____

CITY_____CONTACT PHONE_____

PRE START-UP CHECKLIST

PRIOR TO ROCKWELL AUTOMATION BEING ON SITE, CONFIRM THAT THE FOLLOWING ACTIONS HAVE BEEN COMPLETED (OR WILL BE COMPLETED PRIOR TO THE SCHEDULED START-UP):

	YES
1. The Trane Liqui-Flo VFD is mounted and wired per the CVHE-OM-8 Operation & Maintenance manual and/or wiring diagram (if separately supplied).	☐
2. The A-C primary line voltage is the proper voltage.	☐
3. The Trane chiller is ready to start and operate under load conditions. All preliminary start-up checks have been completed as detailed in the appropriate Installation Operation Maintenance manual, such as (evacuation, charging, all wiring & electrical work, chiller and AFD control settings checked, etc...).	☐
4. The Personnel have been selected to assist the Rockwell Automation service representative with the operation of the equipment and the facility layout.	☐

REQUEST FOR SERVICE REPRESENTATIVE

I acknowledge that all four of the above items have been completed. I understand that if upon job inspection these requirements are not met, no start-up work will be performed and travel time and mileage will be charged at current hourly rates.

NAME _____COMPANY_____

_____

PHONE_____FAX_____

DATE/TIME DESIRED_____ALTERNATE DATE/TIME_____

START-UP SERVICE COVERED BY P.O.#_____

LiquiFlo
LIQUID COOLED AC DRIVE

2307-5223-C, Unit Mounted Adaptive Frequency™ Drive AFDB Schematic Wiring

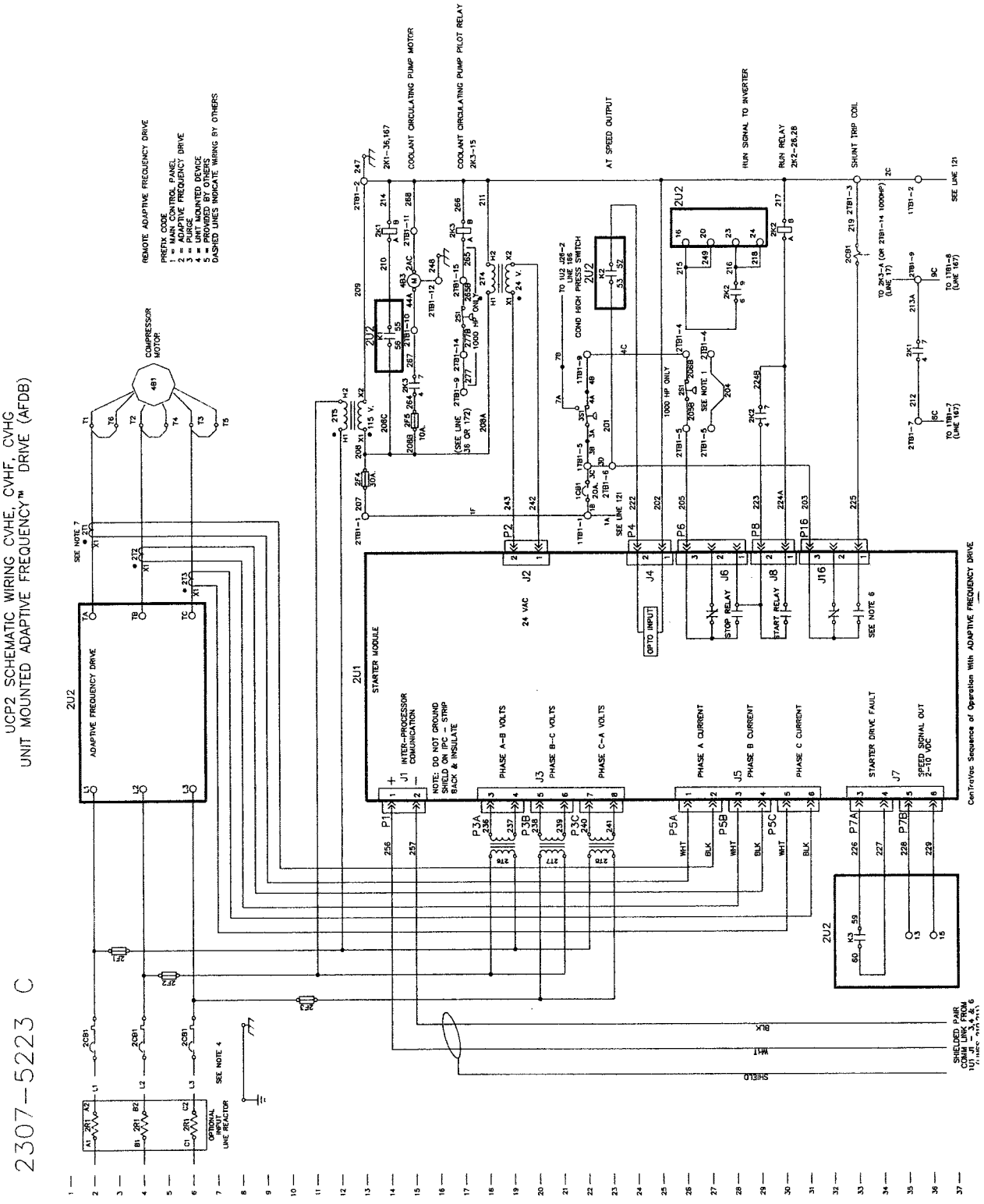

2307-5223-C, Unit Mounted Adaptive Frequency™ Drive AFDB Schematic Wiring

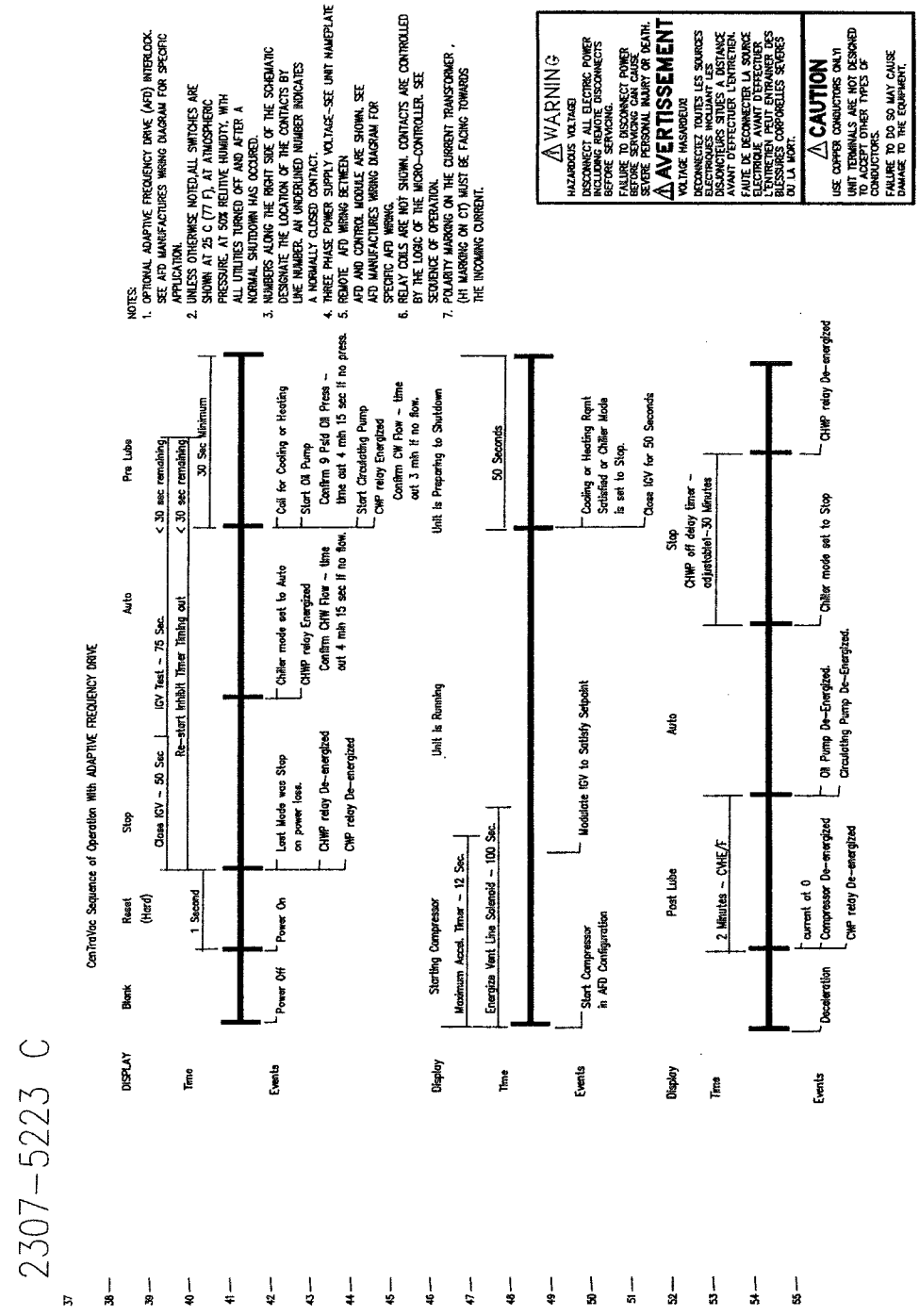

2307-5230-C, Field Connection Wiring - CVHE, CVHF, CVHG

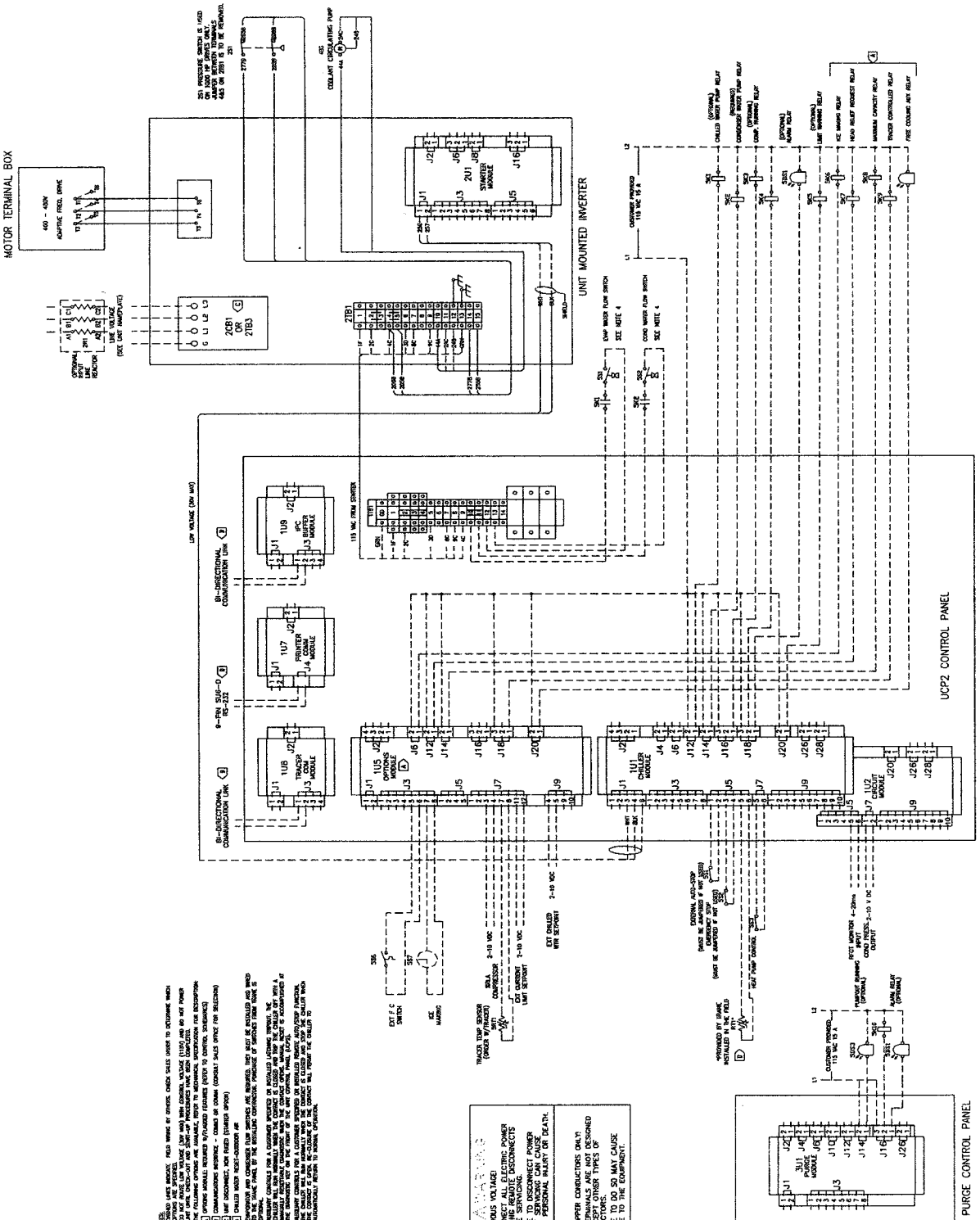

TRANE™

Operation Maintenance

PRG-OM-6A

Library	Service Literature
Product Section	Refrigeration
Product	Centrifugal Liquid Chiller, Water-Cooled
Model	PRGC
Literature Type	Operation/Maintenance
Sequence	6A
Date	July 28 1997
File No.	SV-RF-CTV-MISC-PRG-OM-6A-797
Supersedes	PRG-OM-6-11/95

Trane "Purifier" Purge

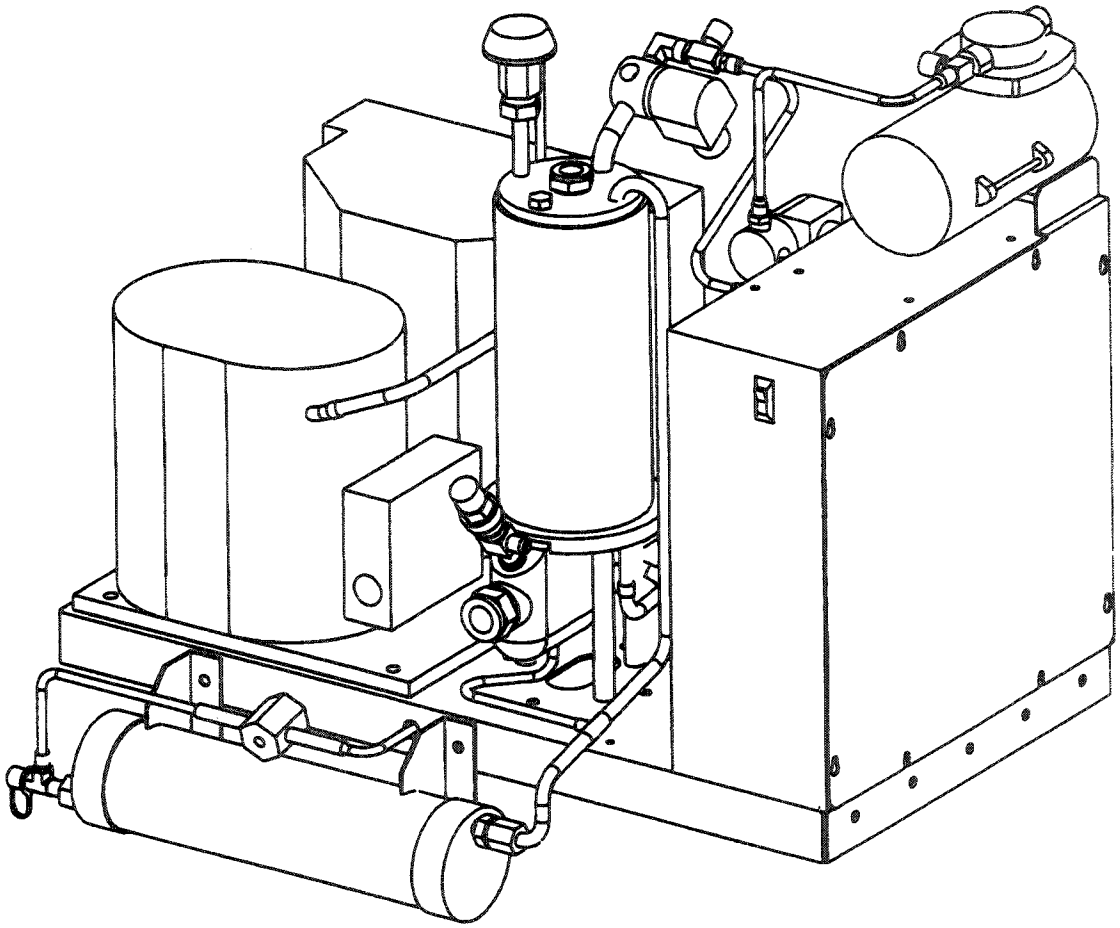

X39640408-020

Since the Trane Company has a policy of continuous product improvement, it reserves the right to change specifications and design without notice. The installation and servicing of the equipment referred to in this booklet should be done by qualified, experienced technicians.

Table of Contents

3 Specifications

3 Model Number Description

4 General Information
4 About this Manual
4 Literature Change History
4 Warnings and Cautions
4 Purge Nameplate

5 Operating the Purge
5 Introduction
6 UCP2 Human Interface
7 -- Setup
7 ---- Type
7 ---- Service Log Reset
8 ---- Setpoints
9 -- Operating Mode
10 -- Reports
10 ---- Status of Operation
11 ---- Performance Data
12 ---- 30 Day Summary Data
13 ---- Diagnostics
15 -- Restarting the Purge Following a Latching Diagnostic
16 Purge Based Human Interface
16 -- Display Overview
17 -- Menu Overview
17 -- Alarm Messages
17 -- Status Messages
17 -- Default Displays
19 Operating the Purge
20 Purge Start-Up
20 Data Logging

21 Purge System Overview
21 Introduction
21 Purified Purge Subsystems
24 -- Heat Transfer Circuit
25 -- Purge Tank
25 -- Pumpout System
25 -- Purge Control System

27 Operating Principles
27 General
28 Operating Cycle
29 Operating Limits
29 Air Removal
31 Moisture Monitoring and Removal

32 Maintenance
32 Periodic Maintenance
32 -- Weekly
32 -- Semi-Annually
32 -- Annually
33 Service Procedures
33 -- Purge Tank Checkout and Water Removal
34 -- Drier Core Replacement
35 -- Filter Drier Assembly Replacement
36 -- Purge Pumpout and Fault Check
37 -- Purge Operation After Major Chiller Repairs
37 -- Bypassing Pumpout Restrictor

38 Troubleshooting
38 Troubleshooting Procedures
38 Troubleshooting Chart
42 Refrigeration System Diagnostic Procedure
42 -- Charge Level
42 -- Expansion Valve
43 Control Circuit Test

45 Electrical System
45 Control Components
45 -- Microprocessor Module
45 -- Pumpout System
46 -- Service Pumpout Switch
46 -- Chiller Liquid Refrigerant Temperature
46 -- Liquid Level Sensor
46 -- Isolation Solenoids
46 -- External Alarm Relay
47 Purifier Purge Electrical Configurations
50 Sequence of Operation

51 Purifier Plus
51 General Information
51 Tank Replacement
51 Receiving the Replacement Kit
52 Installing the New Canister
53 Return Instructions
53 Maintenance

Notice

The Trane Company urges that all HVAC servicers working on Trane equipment, or any manufacturer's products, make every effort to eliminate, if possible, or vigorously reduce the emission of CFC, HCFC and HFC refrigerants to the atmosphere resulting from installation, operation, routine maintenance, or major service on this equipment. Always act in a responsible manner to conserve refrigerants for continued use even when acceptable alternatives are available. Conservation and emission-reduction can be accomplished by following recommended Trane service and safety procedures published in Trane General Service Bulletin CTV-SB-81. The information and procedures provided in CTV-SB-81 supersedes those published in this manual. Copies of this bulletin may be obtained by contacting your local Trane commercial product representative.

 ©American Standard Inc 1997

Specifications

Electrical Power Requirements
103-127 VAC, 60 Hz, 1-Phase, 8 Amps.
99-121 VAC, 50 Hz, 1-Phase, 8 Amps.

Fault Relay Output Rating
120 VAC, 1 Amp

Operating Environment
40 F to 120 F; 5% to 95% relative humidity, non-condensing.

Storage Environment
-40 F to 150 F; 5% to 95% relative humidity, non-condensing.

Mounting
Direct-mounted on condenser shell above liquid level of highest condenser.

Dimensions (approx.)
25 1/2" high x 24 3/4" wide x 18 3/4" deep, with filter-drier.

Weight
115 pounds with filter-drier.

Model Number Description

The operating components and options for any Trane Purifier Purge are assigned a multiple-character alphanumeric model number that precisely identifies each unit. An explanation of the identification code that appears on the unit nameplate is shown here.

Use of the service model number will enable the owner/operator, installing contractors, and service technicians to define the operation, components and options for any specific unit.

Sample Model Number

Model No.	P	R	G	C	A	0	0	1	A	A0		A
Digit No.	1,	2,	3	4	5	6	7	8	9	10,11		12

Digits 1,2,3
Unit Type
PRG = Purifier Purge

Digit 4
Development Sequence
A = First Generation
B = Second Generation
C = Third Generation

Digit 5
Controls Type
A = Standard
B = NEMA-4
S = Special

Digit 6
Digit Not Used

Digit 7
Human Interface Type
0 = UCP2 Based Display
1 = Purge Based Display

Digit 8
Electrical Characteristics
1 = 115/60/1, 110/50/1
S = Special

Digit 9
Refrigerant Type
A = CFC-11/HCFC-123
B = CFC-113
S = Special

Digits 10, 11
Design Sequence
A0 = First (original) Design Sequence

Digit 12
Agency Approval
A = UL and CSA
B = None

General Information

About this Manual

This manual discusses the Purifier Purge system operating concepts, operator interface, maintenance requirements and procedures, and basic troubleshooting procedures.

Literature Change History

PRG-OM-3 (December 1990)

Original issue of manual, describing operation, control, start-up, maintenance and troubleshooting of the Trane Purifier Purge unit. This manual applies to Model PRGA design sequence "1C" purge units only.

PRG-OM-3A (January 1992)
Manual revised to:

- Replace PDS description with unit model number descriptions, show updated nameplate, add HCFC-123 to Figure 2
- Correct operational description
- Update Troubleshooting chart

PRG-OM-4 (November 1992)
Manual revised to:

- Model PRGB
- Incorporate HFC-134a Condensing Unit
- Redesigned purge tank
- Separate filter-drier canister
- Revised control panel configuration

PRG-OM-5 (July 1993)
Manual revised to:

- Model PRGC
- Incorporate UCP2 microprocessor control with adaptive operating mode and improved diagnostic capability
- Incorporate tank float switch

PRG-OM-5 (October 1993)
Manual revised to:

- Clarification of existing information.

PRG-OM-6 (November 1995)
Manual revised to:

- Incorporate improved pumpout circuit.
- Redesigned filter-drier assembly.

Incorporate Purifier Plus.

PRG-OM-6A (July 1997)
Manual revised to:

- Update General Assembly
- Expand Troubleshooting Section

Warnings and Cautions

Notice that **warnings** and **cautions** appear at appropriate intervals throughout this manual. Warnings are provided to alert installing contractors and other personnel to potential hazards that could result in personal injury or death, while cautions are designed to alert personnel to conditions that could result in equipment damage.

Proper chiller performance and the personal safety of operating and service personnel depend upon strict observance of these precautions. The Trane Company assumes no liability for installation or service procedures performed by unqualified personnel.

Purge Nameplate

The nameplate is located on the control panel. Always provide the model number, serial number and product description information from the nameplate when making inquiries or ordering parts or literature for the purge unit. (See Figure 1 for an example of a nameplate).

TRANE

ORDER NO:
MODEL NO: PRGCA011AA0A
SERIAL NO:
RATED VOLTAGE: 110/50/1,115/60/1
TOTAL UNIT AMPS: 8 AMPS
MIN CKT AMPACITY: 10 AMPS
MAX OVERCURRENT
PROTECTIVE DEVICE: 15 AMPS
FACTORY CHARGED: .500 LBS OF HFC-134A
DESIGN PRESSURE: HIGH SIDE 235 PSIG
LOW SIDE 140 PSIG
UNIT SUITABLE FOR USE WITH REFRIGERANT-11 OR 123 SEE PRG-OM-6A
MANUFACTURED UNDER ONE OR MORE OF THE LISTED U.S. PATENTS OWNED BY AMERICAN STANDARD INC.: 5,031,410

Figure 1
Typical Purge Nameplate

Operating The Purge

Introduction

The incorporation of a microprocessor into the purge control system greatly enhances the flexibility of operation of the unit. The operator may adjust various setpoints, select an operating mode, and receive information on system operating status, current and cumulative purging activity, and any active fault diagnostics via a human interface.

There are two basic types of purges covered by this manual:

- UCP2 based display purges
- Purge based display purges

The primary difference between these two types of purge units is the human interface - the device through which the purge is controlled by the operator. The human interface provides the means to adjust operating parameters and setpoints, and is the means by which the purge module reports purge unit function and performance data.

For UCP2 based display purges, the human interface is the UCP2 chiller main panel. For purge based display purges, the human interface is a separable unit which may be mounted in any convenient location on or near the chiller.

The operation of these two types of human interfaces is somewhat different. Each is described fully in the following sections. The operator should reference the section appropriate to the unit being worked on.

The following sections describe in detail the features and operation of the two versions of the purge human interface:

- UCP2 Human Interface
- Purge Based Human Interface

Note: Complete descriptions of operating modes, reports, and diagnostic messages are contained in the UCP2 Human Interface section. The Purge Based Human Interface section contains more abbreviated descriptions, with references to the more detailed information contained in the UCP2 Human Interface section.

These two specialized sections are then followed by three general sections on the operation of the purge:

- Operating the Purge
- Purge Start-Up
- Data Logging

UCP2 Human Interface

The UCP2 chiller main control panel is the human interface providing a means of communication between the operator and the purge microprocessor. This is accomplished via a two row alphanumeric screen display. The display panel is illustrated below. The keys which will be used for purge control are indicated. The applicable screens related to the setup of purge operating parameters, the selection of operating mode, and the review of performance reports are shown in the following sections. The left column of each set illustrates the screens as they actually appear, while brief explanatory notes are given in the right column.

UCP2 screens for the setup, selection of operating mode, and reporting functions of the purge, while grouped together for convenience, are in reality a subset of the larger set of screens used for the control of the centrifugal water chiller. They are accessed through the UCP2 panel via the keys on that panel. The purge setup screens are accessible within the "Field Startup" group found under the "Service Settings" key on the main panel. The purge operating mode screen is accessible using the "Operator Settings" key on the main panel. The report screens may be displayed using the "Refrigerant Reports" key on the main panel. The sections entitled "Setup", "Operating Mode", and "Reports" which follow explain in detail the various required screens and how to access them.

Note: Purge based display purges utilize a different type of human interface. While functionally similar, details of its menu structure and command set are different. See the section "Purge Based Human Interface" for a detailed discussion of this interface.

The following sections describe in some detail the features and operation of the microprocessor controlled UCP2 based display purges:

- Setup
- Operating Mode
- Reports
- Restarting the Purge Following a Latching Diagnostic

UCP2 Based Display

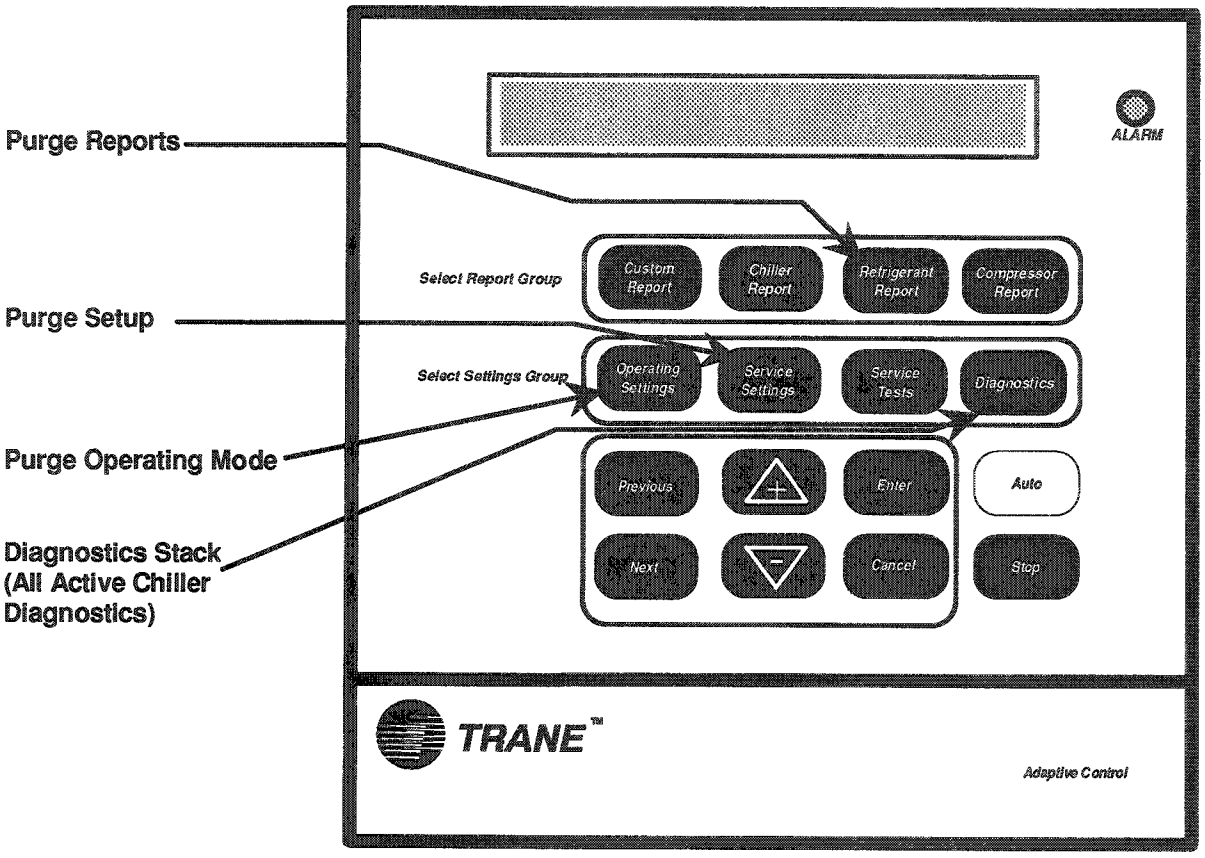

Setup

The operator may establish the desired operating parameters of the Purifier Purge via the human interface by indicating the purge type, the desired operating mode, and various setpoint values.

For the UCP2 based display purge, operating parameter setup is accomplished by pressing the "Service Settings" key on the panel. The "Next/Previous" keys scroll down and up through all available service settings. Scroll to the "Field Startup" screen. Entering the password gains entry to the required area for establishing purge operating parameters. The password is entered by pressing the sequence (+)(+)(-)(-)(+)(+) followed by the "Enter" key. Within the field startup area the "Next/Previous" keys scroll down and up through all available field startup screens. These include the screens required for setting up the purge operating parameters. The "+/-" keys scroll through available options or increment numerical values within a given field startup screen. The "Enter" key enters the displayed value into the microprocessor.

The following sections describe purge setup in the following categories:

- Type
- Service Log Reset
- Setpoints

Type

Purge Control/Type: 01-Micropurge	01-Micropurge = standard

The current Purifier Purge type is 01-Micropurge. Setting to any other type will suppress all purge screens

Service Log Reset

A service log is provided as a convenience to the operator. This service log accumulates pumpout time and elapsed calendar days since the log was last reset. The purpose is to provide a means for the operator to track purge operation relative to any required service intervals. For example, the optional Purifier Plus requires service after a given number of elapsed pumpout minutes or a given number of elapsed calendar days. This service log provides a convenient means to monitor these parameters.

Service Log: Press (enter) to reset Purge Pumpout Time: X,XXX.X Min	Service log reset Displays current value of log
Service Log: Press (enter) to reset Time Since Last Reset: X,XXX Cal Days	Service log reset Displays current value of log

Two reset entries are available. These are:

Purge Pumpout Time

This is to reset service log cumulative pumpout time to zero. The current log value is displayed.

Time Since Last Reset

This is to reset service log cumulative calendar days to zero. The current log value is displayed.

Setpoints

The operation of the purge is constrained by specifying the following setpoints:

Purge Max Pumpout Rate: XXX.X Min/24 hrs "Press (+) (-) to Change Setting"	Range is 1 to 100 minutes Default is 20
Purge Disable Pumpout Alarm for: XX hrs "Press (+) (-) to Change Setting"	Range is 1 to 72 hrs, displays the remaining time as it counts down
Purge Low Liquid Temp Limit: enable,disa "Press (+) (-) to Change Setting"	Enable / disable for low liquid temp limit (next setpoint). Default is ENA
Prg Low Liquid Temp Inhibit Setpt:XX.X F "Press (+) (-) to Change Setting"	Range is 32-50 F (0-10 C). Default is 40. Will display only if enabled

Purge Maximum Pumpout Rate

The maximum allowable minutes of pumpout activity in a 24 hour period. This value may range from 1 to 100 minutes.

Purge Disable Pumpout Alarm For XX Hrs

The alarm indicating pumpout activity has exceeded the set maximum value may be disabled for a given number of hours. This setpoint may be activated if it is anticipated that a large amount of air is in the unit due to service, etc. This value may range from 1 to 72 hours.

Purge Low Liquid Temp Limit: Enable, Disable

Purge pumpout activity may be inhibited if the chiller condenser saturation temperature falls below a set value as established below. This setpoint enables or disables the low temperature inhibit. This setpoint should be enabled for chillers with a free cooling operating mode or ice storage chillers, or any time chiller condenser temperatures are below 50°F, to avoid the pumpout of refrigerant when the purge is in the ON or ADAPTIVE mode.

Purge Low Liquid Temp Inhibit Setpoint

Purge pumpout activity may be inhibited when the chiller condenser saturation temperature is too low to assure effective purging. This setpoint establishes the minimum condenser saturation temperature below which pumpout activity is to be inhibited. Values of this setpoint may range from 32° F to 50° F. This setpoint becomes effective when it is enabled by the preceding setpoint.

Operating Mode

The operator may establish the desired operating mode of the Purifier Purge via the human interface.

For the UCP2 based display purge, operating mode selection is accomplished by pressing the "Operator Settings" key on the panel. The "Next/Previous" keys scroll down and up through all available operator settings. The "+/-" keys scroll through available options within a given operator setting screen. The "Enter" key enters the displayed value into the microprocessor.

Purge Operating Mode: [Mode] "Press (+) (-) to Change Setting"	[Mode] = STOP, ON, AUTO, ADAPTIVE

The purge system operating mode indicates the desired mode of operation. Available operating modes are:

Stop

The condensing unit will not run.

On

The purge system is in the normal operation state and runs continuously regardless of chiller operational status.

Auto

The purge system runs in the normal operation state when the chiller is running.

Adaptive

In this mode, purge operation is totally dependent on past purge activity.

With the chiller operating in powered cooling, the purge module will keep track of the last 30 days of chiller operation and will store the amount of pumpout time and the amount of run time for the chiller. Using the data for all days of chiller operation, the average pumpout time is computed. If the last day's pumpout time is greater than 5 times the average, the last day's pumpout activity will be used to determine the purge off cycle duration; otherwise the average will be used. The purge will start when the chiller starts, and will continue to operate until 60 consecutive minutes of operation without pumpout occur. The purge will then shut down for a period of time based on the average pumpout time.

Average pumpout with chiller running	Purge off cycle duration
< 1 minute	4 hours
1 to 3 minutes	3 hours
3 to 5 minutes	2 hours
5 to 8 minutes	1 hour
> 8 minutes	no off cycle

The purge module will store the accumulated pumpout time for the first 3-hour period during the last 5 chiller shutdowns. A time period will be calculated based on the average amount of pumpout occurring for these last 5 cycles. This time period represents the amount of chiller run time permitted before the purge will run at chiller shutdown. When this amount of chiller run time elapses, the purge will be run the next time the chiller is shut down.

Average pumpout, last 5 shutdowns	Chiller run time to next purge run at shutdown
< 2 minutes	80 hours
2 to 4 minutes	40 hours
> 4 minutes	20 hours

If it is determined that the purge is to run at chiller shutdown, the purge will start after the chiller shuts down. The purge will continue to run for 3 hours or until 30 consecutive minutes of run time without pumpout are recorded.

The purge module will calculate the average pumpout time for the last 30 days of extended chiller off periods. This average is used to determine an allowable number of consecutive off days that may elapse before purge operation is required.

Average pumpout during extended chiller off periods	Number of consecutive off days before the purge runs
< 1 minute	14 days
1 to 2 minutes	10 days
2 to 3 minutes	6 days
3 to 4 minutes	4 days
4 to 5 minutes	3 days
5 to 8 minutes	2 days
> 8 minutes	1 day

If it is determined that the purge is to run during a chiller off cycle, the purge will continue to run until 60 minutes of consecutive run time without pumpout are recorded.

Reports

The current and cumulative operating status of the purge is reported via the human interface. This report includes any current system diagnostics.

For the UCP2 purge, reports on status of operation, any active diagnostics, current performance data, and 30 day summary data may be viewed by pressing the "Refrigerant Report" key on the panel. The "Next/Previous" keys scroll down and up through all available chiller reports, including those on purge activity.

For the UCP2 purge, diagnostics may be reviewed and reset by pressing the "Diagnostics" key on the panel. The "Next/Previous" keys scroll down and up through all active chiller diagnostics, including those on purge activity.

The following sections describe purge reports in the following categories:

- Status of Operation
- Performance Data
- 30 Day Summary Data
- Diagnostics

Status of Operation

The purge status indicates the current operating status.

Purge Operating Mode:	Adaptive	See "Operating Mode"
Purge Status:	Running	See "Status of Operation"

Values of operating status are:

Idle

Condensing unit is off.

Running

Condensing unit is on.

Pumpout

Condensing unit is on, pumpout initiated by purge refrigerant compressor suction temperature.

Service Pumpout

Pumpout initiated by service switch (manual).

Running - Pumpout Inhibited By Low Temp

Condensing unit is on, pumpout inhibited by low condenser saturation temperature.

Pumpout Maximum Rate Disabled

Condensing unit is on, maximum pumpout rate alarm has been disabled by the operator. See PURGE DISABLE PUMPOUT ALARM FOR XX HRS in "Setpoints" under "Setup".

Performance Data

Purge Suction Temp: XXX.X F Purge Liquid Temp: XXX.X F	Purge refrigerant comp suction temp Chiller condenser saturation temp
Purge Pumpout Rate: XXX.X Min/24Hrs Purge Max Pumpout Rate: XXX.X Min/24Hrs	Current purge pumpout rate Max pumpout rate setpoint
Purge Total Pumpout Time: XX,XXX.X Min Purge Total Run Time: XX,XXX.X Hrs	Log of total accumulated pumpout and run time since installation
Purge Adapt Cycle T/Chlr On : XXX.X Hrs Time to Purge Remaining: XXX.X Hrs	Adaptive mode off-interval/time-to-run based on pumpout history
Purge Adapt Cycle T/Chlr Off: XXX.X Hrs Time to Purge Remaining: XXX.X Hrs	Adaptive mode off-interval/time-to-run based on pumpout history
Service Log: Reset log in field start up Purge Pumpout Time: X,XXX Pumpout Min	Accumulated service interval run time
Service Log: Reset log in field start up Time Since Last Reset: X,XXX Cal Days	Accumulated service interval calendar time

Current operating performance data includes:

Purge Suction Temp

The current purge refrigerant compressor suction temperature. This temperature is monitored to initiate and terminate pumpout activity. Pumpout is initiated at 18F and terminated at 22 F.

Purge Liquid Temp

The current chiller condenser saturation temperature. For UCP2 purges, this is reported from the chiller sensors. For purge based display purges, this data is acquired from an additional sensor mounted on the purge liquid return line (to the chiller condenser).

Purge Pumpout Rate

Current pumpout rate expressed in minutes of activity in a 24 hour period.

Purge Max Pumpout Rate

The current maximum allowable pumpout rate established as user entered data. When the current pumpout rate exceeds the maximum, an alarm diagnostic is generated.

Purge Total Pumpout Time

Log of accumulated pumpout activity over the life of the unit to this point.

Purge Total Run Time

Log of accumulated purge system run time over the life of the unit to this point.

Purge Adaptive Cycle Time/Chiller On

The purge off cycle time computed by the adaptive mode based on cumulative pumpout history for chiller on operating periods. Shown only when adaptive mode is active

Purge Adaptive Cycle Time/Chiller Off

The purge off cycle time computed by the adaptive mode based on cumulative pumpout history for chiller on and off operating periods. Shown only when adaptive mode is active.

Time To Purge Remaining

The time remaining from the Purge Adaptive Cycle Time until purge activity resumes. Shown only when adaptive mode is active.

Service Log: Purge Pumpout Time

A cumulative log of purge pumpout time since this log was last reset. This output is provided to help the operator track desired service intervals which are dependent upon purge activity.

Service Log: Time Since Last Reset

A cumulative calendar day log since this log was last reset. This output is provided to help the operator track desired service intervals which are dependent upon elapsed time.

30 Day Summary Data

Historical data is available via the human interface for a number of variables for the previous 30 calendar days, independent of whether the chiller or purge was run. This historical data is used by the ADAPTIVE mode to adjust purge operational parameters to optimize purge performance. The operator may study this data to analyze chiller leak patterns.

30 Day Purge Pumpout Avg: XXX.X Min/Day Chiller Average Run Time: XXX.X Hrs/Day	Pumpout activity indicative of total chiller leak picture
30 Day Purge Pumpout Avg, Chiller Running: XXX.X Min/Day	Pumpout activity indicative of chiller running leaks
Last 5 Cycle Pumpout Avg, Interval From Shtdn to 3 Hrs after shtdn:XXX.X Min/Day	Pumpout activity indicative of chiller air storage during operation
30 Day Pumpout Avg, Interval From 3 Hrs after Shtdn to next start: XXX.X Min/Day	Indicative of seal, o-ring, etc leakage during chiller off periods

The summary data includes:

30 Day Purge Pumpout Average

Average pumpout activity per 24 hour period over the last 30 days.

Chiller Average Run Time

This is the summation of chiller run time in hours divided by the number of days of available data.

30 Day Purge Pumpout Avg, Chiller Running

This summary includes all pumpout data for periods when the chiller is running. Large service pumpouts are not included if they occurred more than 7 days in the past.

Last 5 Cycle Pumpout Avg, Interval From Shutdown To 3 Hours After Shutdown

Data is available for the previous 30 calendar days for pumpout data during the first 3 hours following chiller shutdown. Large service pumpouts are included. From this data, the average for the last 5 shutdown cycles is reported here.

30 Day Pumpout Avg, Interval From 3 Hours After Shutdown To Next Start

This summary includes all pumpout data for extended chiller shutdowns (beyond the 3 hour period covered above). Large service pumpouts are not included if they occurred more than 7 days in the past.

Diagnostics

Faults that occur during the operation of the purge result in the generation of a diagnostic message indicating the nature of the fault. These diagnostic messages are communicated via the human interface. Chiller operation is unaffected by purge diagnostics.

When a diagnostic is detected, the display will automatically go to the "Diagnostics" menu and the following screen will appear:

A New Warning Has Been Detected Press (Next) For More	A new diagnostic has been detected

This is a "one-time" screen that will not reappear. Pressing "Next" causes the following screen to appear:

Diagnostic Report Follows Press (Next) For More	Scroll down to review diagnostic messages

The next screen will be:

Press (Next) to Display Operating Mode at Time of Last Diagnostic	Display chiller operating mode at time of diagnostic

Pressing "Next" will display the chiller operating mode at the time the diagnostic was generated. Following that screen, all active chiller diagnostics will be displayed in order of occurrence from newest to oldest. Diagnostics are displayed on 2 screens. The first screen contains the diagnostic message itself, along with a sequence number and a brief help message. An example purge diagnostic message is:

[sn] Max Pumpout Rate Exceeded (Prg) Purge Inoperative: See Purge OM Manual	Example diagnostic/help message

The second screen for each diagnostic message contains the sequence number and a date and time stamp. The form of this screen is:

[sn] Occurred at HH:MM xm Mon xx, 199x	Example diagnostic/help message time and date stamp

Following the active diagnostics may be a series of diagnostics labeled "historic only." These are diagnostics for which corrective action has been taken and which have been cleared. A buffer containing up to 20 of these historic diagnostics is retained for reference only

Diagnostics are either "latching" or "non-latching". Latching diagnostics force the purge to the STOP state. The purge may only be restarted by clearing these latching diagnostics after appropriate corrective action has been taken. See the section "Restarting the Purge Following a Latching Diagnostic" for more information on clearing latching diagnostics and restoring purge operation.

Non-latching diagnostics are cleared when the fault causing the diagnostic is corrected. No reset is required.

Operating The Purge (Continued)
UCP2 Based Display

Available purge diagnostics are as follows:

Purge Cprsr Suction Temp Sensor

The purge compressor suction temperature sensor has failed, the connection has been broken, or a short has occurred in the wiring. This latching diagnostic is set on a short or open.

Chlr Sat Cond Temp Sensor (Purge)

The chiller condenser liquid temperature sensor has failed, the connection has been broken, or a short has occurred in the wiring. This diagnostic is operational only in a purge based display application, and then only if low chiller liquid temperature protection is enabled. This latching diagnostic is set on a short or open. See Table 2 for Sensor Resistance Values.

Max Pumpout Rate Exceeded-SVC (Prg)

The pumpout rate timer exceeded the maximum pumpout rate setpoint while the service pumpout switch was in the service position. This is a latching diagnostic. When this diagnostic is cleared the pumpout rate timer will be reset to zero.

Max Pumpout Rate Exceeded (Prg)

The pumpout rate timer exceeded the maximum pumpout rate setpoint while the service pumpout switch was in the auto position (normal purge operation). This is a latching diagnostic. When this diagnostic is cleared the pumpout rate timer will be reset to zero.

Purge Liquid Level Too High

The liquid level sensor indicates liquid refrigerant is filling the primary purge tank. This is a latching diagnostic. Fault on open.

Purge: Loss of Comm With Chiller

Communications with the human interface (chiller module) have been lost for 15 consecutive seconds. This is a non-latching diagnostic.

Purge: Loss of Comm With Starter

Communications with the starter module have been lost for 15 consecutive seconds. This diagnostic is active for UCP2 applications only. This is a non-latching diagnostic. The diagnostic will be cleared when communications resume.

Purge: Loss of Comm With Stepper

Communications with the stepper module have been lost for 15 consecutive seconds. This diagnostic is active for UCP2 applications only. This is a non-latching diagnostic. The diagnostic will be cleared when communications resume.

Purge Memory Error III

A shadow RAM memory error was detected. This diagnostic is active for UCP2 applications only. No setup parameters were lost. This is an informational diagnostic only. Occurrence of this diagnostic should be an isolated event. If this diagnostic occurs repeatedly, the purge module should be replaced.

Purge Memory Error Type I: NOVRAM

A NOVRAM memory error was detected. This diagnostic is active for purge based display applications only. The purge module is operating on engineering ROM default setup parameters. Check all setup parameters and continue to operate purge. Replace the purge module at the first opportunity.

Purge Memory Error Type II: Shadow RAM

A Shadow RAM memory error was detected. This diagnostic is active for purge based display applications only. No setup parameters were lost. Compressor starts and hours were lost for not more than the last 24 hours. This is an informational diagnostic only. Occurrence of this diagnostic should be an isolated event. If this diagnostic occurs repeatedly, the purge module should be replaced.

Purge Memory Error Type III

A Shadow RAM error was detected. This diagnostic is active for purge based display applications only. Setup parameter changes made within the last 24 hours were lost. Check the operating parameters and update as required. Compressor starts and hours were lost for not more than the last 24 hours. This is an informational diagnostic only. Occurrence of this diagnostic should be an isolated event. If this diagnostic occurs repeatedly, the purge module should be replaced.

Restarting the Purge Following a Latching Diagnostic

All latching diagnostics force the purge to the STOP state. An alarm relay available for use by the operator is activated. The purge may only be restarted by clearing these latching diagnostics after appropriate corrective action has been taken.

Latching diagnostics are cleared by a command from the human interface in the "Diagnostics" area. See the illustration of the UCP2 Based Display on page 6.

If any active purge diagnostics are present, the following screen will appear at the end of the "Diagnostics" section below all active and historic diagnostic messages:

Press (Enter) to Clear Purge Diagnostics	Message to clear active purge diagnostics

Pressing "Enter" at this point will clear active purge diagnostics, and the following screen will be displayed for 4 seconds:

Purge Diagnostics Have Been Cleared Diagnostic Report is Being Reset	Message stating diagnostic reset has occurred

Following this display, the purge will restart automatically.

Note: Do not press "Enter" when the following screen is displayed:

Press (Enter) to Clr Active Diagnostics and Shutdown / Reset System	Chiller reset. **Do not use to clear purge diagnostics**

Pressing "Enter" at this point will shut down the chiller and reset all system operating parameters.

Continue to scroll down until the screen specifically intended to clear purge diagnostics is encountered.

Purge Based Human Interface

Purifier Purge units supplied as purge based display purges have a different human interface than UCP2 based display purges on Trane CenTraVac chillers.

UCP2 based display purges have access to the chiller main panel for input and report screen display. In general, purge based display purges will not have a compatible main panel display available. For this reason, purge based display purges are supplied with their own interface. The interface ships attached to the microprocessor panel as shown in Figure 4, but may be easily separated and mounted in any convenient location on or near the chiller.

There are two primary differences between the UCP2 human interface and the purge based human interface:

1. Because of a smaller screen display area, the messages outlined in the preceding sections "Setup" and "Reports" are somewhat abbreviated for display on the purge based human interface.
2. Because the purge based human interface is a free-standing unit not linked to the main chiller panel, its function is wholly dedicated to control and operation of the purge. Since the screens do not form a subset of a larger group of screens, the menu structure is simpler and more direct.

The following sections explain the menu concept and slightly modified command set of the purge based human interface.

Display Overview

The purge based human interface contains 8 keys and a 2 x 16 character display on the front panel. A display backlight will illuminate when the display keys are pressed. The information displayed on the purge based human interface is constantly updated from the purge control module inside the purge control box.

The keys on the human interface are functionally grouped to start and stop the purge, "change" the purge setpoints, and "view" the contents of the purge menus.

- The "view" keys include the <Next> and <Previous> keys. These keys will display the next or previous menu entry.

- The "change" keys include a <+> and <-> key to change the operator setpoints in the SETTINGS report and an <Enter> and <Cancel> key to either accept or reject the changed setting.

- The <Stop> key is used to stop the purge. The <Auto/On> key is used to return the purge to an active state after the stop key is pressed. The <Auto/On> key will place the purge into the mode set up in the SETTINGS report for "Purge Control Mode".

Purge Based Display

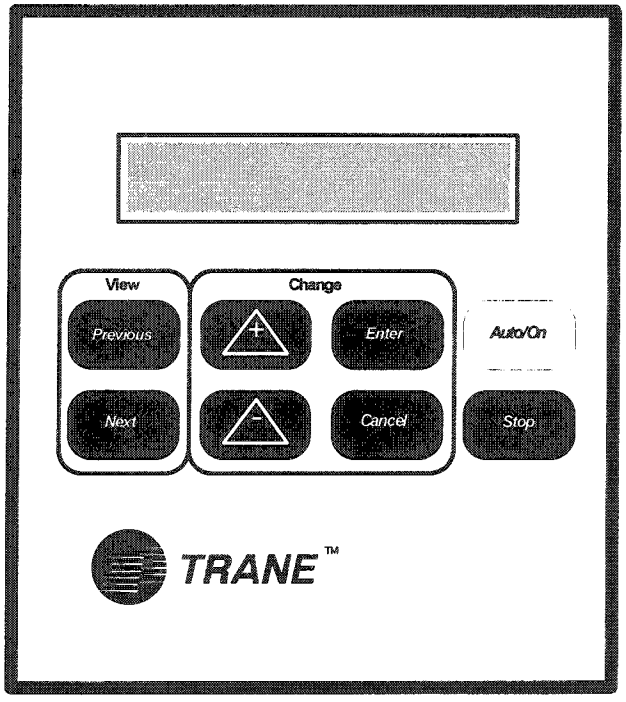

Menu Overview

The purge based human interface uses a major menu structure with entry points into side menus (see the following chart entitled "Purge Based Human Interface Menu Structure"). The <NEXT>, <PREVIOUS> keys are used to navigate vertically through the menus. If the side menus are not accessed, only the major menu entries are displayed (those shown on the left column of the chart entitled "Purge Based Human Interface Menu Structure"). The side menus are accessed by pressing the <ENTER> key at the entry points into the side reports. Once a side menu is accessed, the <NEXT>, <PREVIOUS> keys are used to navigate vertically through the screens. The <NEXT>, <PREVIOUS> keys will return to the major menu loop once the side menu is exhausted.

A brief description is given in the chart for each menu entry. Additional explanation may be found in the referenced UCP2 human interface section.

Alarm Messages

If an alarm is active, an alarm message will display alternately with the alarm heading. The list of alarm messages that may be displayed for the purge based human interface are:

> Suction Temp Sensor Fail
> Liquid Temp Sensor Fail
> Liquid Level Too High
> NOVRAM Error 1
> NOVRAM Error 2
> NOVRAM Error 3
> Lost Communication
> Max Pumpout Rate Exceeded
> Max Pumpout Rate Exceeded - Service

A further explanation of these alarm diagnostics may be found in the "Diagnostics" section for the UCP2 human interface.

As indicated in the above referenced section, some diagnostics are latching, that is, they force the purge to the STOP state, and some are non-latching. Non-latching diagnostics are cleared when the fault causing the diagnostic is corrected. No reset is required, and purge operation resumes automatically. Latching diagnostics are cleared by pressing the <+> key after appropriate corrective action has been taken. The purge will then restart.

Status Messages

Valid status messages for the purge based human interface are:

> IDLE - Condensing unit is off
> RUNNING - Condensing unit is on
> PUMPOUT - Temperature initiated pumpout is active
> SVC-PUMP - Pumpout initiated by the service switch
> LOW TEMP - Pumpout inhibited by a low liquid temperature
> SVC-OVRD - Max pumpout rate alarm is disabled

A further explanation of the status displays may be found in the "Status of Operation" section for the UCP2 human interface.

Default Displays

After 20 minutes of inactivity a default screen is displayed. The default screen consists of either an alternating status display or an alternating alarm display if an alarm is currently active. The alternating status display consists of the Mode/Status screen and the Last 24 hour pumpout rate screen. The alarm display consists of an alarm screen and an alarm message. The backlight will flash when the alarm screen is displayed and an alarm is active.

Operating The Purge (Continued)
Purge Based Display

Purge Based Human Interface Menu Structure

Major Menu	Side Menus	Description/Ranges
Mode: ADAPTIVE Status: RUNNING		Purge operating mode [STOP, ON, AUTO, ADAPT] Purge Status See "STATUS MESSAGES"
Last 24 Hr Pump Rate: XXXX.X Min		Current purge pumpout rate for the last 24 hours
**** ALARM! **** Press + to Reset		Alarm status - Backlight will flash when in alarm (See "ALARM MESSAGES"
1 TEMP Report <Enter> to View		Entry point into the **TEMPERATURE** Report
	Prg SUCTION Temp = XXX.X F	Purge refrigerant compressor suction temperature
	Prg LIQUID Temp = XXX.X F	System refrigerant liquid temperature returned to the chiller from the purge
2 RUNTIME Report <Enter> to View		Entry point into the **RUNTIME** Report
	PUMP Time Last 24 hr=XXXX.X min	Current purge pumpout rate for the last 24 hours
	PUMP Time Total = XXXXX.X min	Log of total purge pumpout time since installation
	PURGE Run Time Ttl= XXXXX.X hrs	Log of total purge run time since installation
	ADAPT Cycle Time w/CHLR ON= XXhrs	Adaptive mode "off-interval" - for use when chiller is running (varies from 0 to 4 hrs).
	ADAPT Cycle Time w/CHLR OFF=xxxhr	Adaptive mode "off-interval" - for use when chiller is off (varies from 1 to 14 days, displayed in hours).
	Time until Purge Runs: =XXX.X hrs	Amount of time left on the adaptive cycle timer until the purge runs
	LOG <+> to Reset XXXXmin XXXXdays	Service log - accumulated pumpout time and calendar days since the log was last reset.
3 30 Day Report <Enter> to View		Entry point into the **30 DAY** Report
	Avg 30 Day Pump = XXXX.X min/day	Last 30 day pumpout activity - indicative of total chiller leak picture
	Avg 30 Day Chlr Run=XX.X hrs/day	Last 30 day chiller run activity
	Avg Pmp;CHLR RUN = XXXX.X min/day	Last 30 day pumpout activity while the chiller was running - indicative of chiller low side leakage
	Avg Pmp;CHLR OFF = XXXX.X min/day	Last 30 day pumpout activity while the chiller was off - indicative of low and high side leakage
	Avg Pmp;CHLR DWN =XXX.Xmin/Shtdwn	Pumpout activity during 3 hours after chiller shutdown - indicative of air storage during operation
4 SETTINGS Reprt <Enter> to View		Entry point into the **SETTINGS** Report
	Purge Control Mode = ADAPTIVE	Operator entry to select purge operational mode. Mode may be set to [ON, AUTO, ADAPTIVE]
	Max Pump Rate = XXX min/24 hr	Operator entry for 24 hour maximum pumpout. Range from 1 to 100 minutes, Default is 20 min.
	Disable Pump Alarm for XX hrs	Max pumpout rate override. Range is from 0 to 72 hours. Display will count down as time elapses.
	Low Liquid Temp Protect= DISABLE	Enable / disable for low liquid temp limit (next setpoint)
	Low Liquid Temp Limit = XX F	Pumpout is disabled when liquid temperature falls belo this setting (range is 32 to 50 F when enabled).
	Display Units = ENGLISH	Select units display "English" or "SI".
	Language Setting ENGLISH	Select language (entries are - English = Standard
	Prg Control/Type 01-Micropurge	01-Micropurge = standard

Operating the Purge

The basic purpose of the Purifier Purge is to remove non-condensibles from the chiller. The available ADAPTIVE mode allows this to be accomplished in the most efficient manner. The AUTO and ON modes are available to allow alternate operating modes better suited to certain applications and in chiller service environments.

The ability to monitor current and historical purge activity via the purge reports allows the operator to monitor chiller leakage, resulting in an effective means to protect the chiller's refrigerant charge.

Purge pumpout minutes are used to :

- Allow the operator to determine and set appropriate PURGE MAXIMUM PUMPOUT RATE setting
- Allow the ADAPTIVE mode to determine the most effective pumpout schedule for the individual chiller
- Determine if the chiller leak rate has increased

The microprocessor monitors the pumpout activity of the purge system and alerts the operator if an unexpectedly high level of activity is present by shutting down the purge via a diagnostic.

The pumpout timer is used to sense and accumulate pumpout time within a 24-hour sliding window. It does this by determining the length of each pumpout cycle and adding that time increment to an accumulation buffer. In order to accumulate time within the 24-hour constraint, the pumpout time measured 24 hours previously is erased from the buffer. When the accumulated time in the buffer exceeds the PURGE MAXIMUM PUMPOUT RATE setting as specified at the purge human interface, a purge latching fault is generated and the purge is disabled. The 24 hour buffer is cleared and the purge is allowed to resume operation after the operator clears the MAX PUMPOUT RATE EXCEEDED diagnostic. The PURGE MAXIMUM PUMPOUT RATE setting is selectable at the human interface. The selectable range is from 1 to 100 minutes per 24 hours. The factory setting is 20 minutes. Since individual chillers operate at differing temperature conditions, run schedules, and air-leak rates, the chiller operator may need to set a rate more appropriate for his particular system.

At initial startup, the operator should log the purge pumpout activity to develop a short history for his machine. After gathering this pumpout data, the operator should set a PURGE MAXIMUM PUMPOUT RATE that will protect the chiller from any sudden increases of pumpout activity but will not result in nuisance trips under what is normal pumpout activity for his machine.

Note: Be certain that any normal increases in pumpout activity due to extended chiller off cycles (normal duty rotation or week-ends) are taken into account.

The MAX PUMPOUT RATE EXCEEDED diagnostic may be disabled when known large quantities of air must be removed from the chiller (such as after major chiller servicing). The PURGE DISABLE PUMPOUT ALARM FOR XX HRS setting is programmable from the purge human interface. The disable interval may be selected from 1 to 72 hours. The remaining time for the disable mode may be determined by monitoring the human interface. The displayed interval will decrease as time elapses. The set point for the disable mode may be modified at any time by modifying the disable time and entering the new value.

Note: Since the purge has no fault protection in the disable alarm mode, it is recommended that this mode be used sparingly and only when the purge and controls are known to be operating properly.

Purge Start-Up

Before the Purifier Purge is operated for the first time, be sure to perform the following procedures:

If the purge unit is equiped with a replaceable filter drier core, perform the following steps, beginning with step 1. If the purge unit is equipped with a replaceable filter drier assembly begin with step 3.

1. Remove the cover from the filter-drier canister and install the two (2) filter-drier cores that shipped with the purge. Refer to "Filter-Drier Core Replacement" in "Service Procedures" section.

Note: The drier cores adsorb moisture from ambient air, so they are shipped in sealed containers. Keep the cores sealed prior to installation.

2. Replace the filter-drier canister cover, positioning the drain at the bottom of the canister and tighten the bolts evenly.

Note: Be sure all internal components are in the proper position when replacing the canister cover (See Figure 10).

3. Perform the "Purge Pumpout and Fault Check" as described in the "Service Procedures" section.

4. Open the purge tank isolation valves on the purge tank inlet and liquid return lines.

5. Program the purge control mode to AUTO or ADAPTIVE for normal operation.

6. Check maximum pumpout rate setting. Factory setting is 20 minutes/24 hours. Adjust setting as needed later, based on purge system pumpout requirements.

7. If there is an excessive amount of air in the chiller:

a. Temporarily bypass the pumpout restrictor (see "Bypassing Pumpout Restrictor")

b. Program the PURGE DISABLE PUMPOUT ALARM for 24 hours.

Data Logging

One of the most valuable features of the microprocessor based purge is the ability to use stored purging data to monitor the condition of the chiller. It is strongly recommended that the operator maintain a log on a daily or weekly basis, recording at least the following data:

- Purge pumpout last 24 hours
- 30 Day purge pumpout average
- 30 Day purge pumpout average, chiller running
- Last 5 cycle pumpout average, interval from shutdown to three hours after shutdown
- 30 Day pumpout average, interval from three hours after shutdown to next start.

A sudden change in the trend of this data, which cannot be accounted for by a change in chiller operational patterns, may indicate the need for a chiller leak check and repair. See the example chart below.

A graphical data log will be easier to interpret than a tabular log.

PURGE DATA TREND

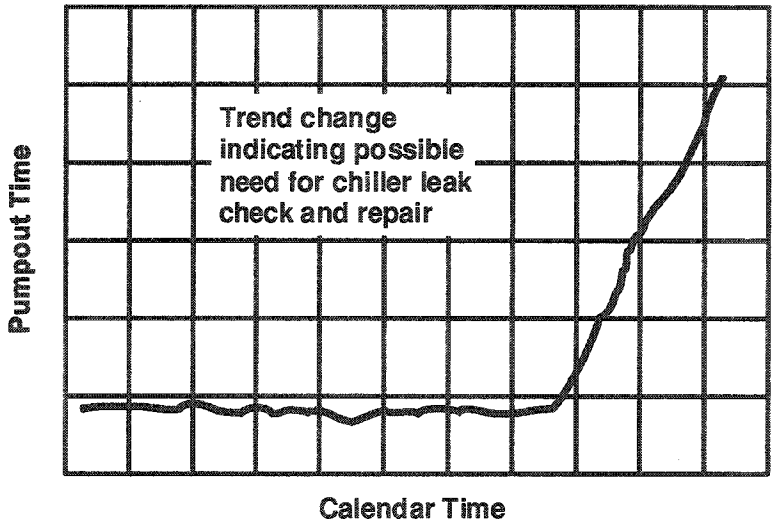

Purge System Overview

Introduction

A purge system is required on all low pressure centrifugal water chillers to remove air, moisture and other non-condensibles that may leak into the machine. The Purifier Purge system is designed to accomplish this task efficiently.

Trane centrifugal chillers utilizing low pressure refrigerants CFC-11, CFC-113 and HCFC-123 operate at less than atmospheric pressure. This is in contrast to the high pressure refrigerants CFC-12 and HCFC-22 which are used in refrigeration systems that operate above atmospheric pressure. Figure 2 compares the pressure/temperature relationship between low and high pressure refrigerants and indicates the temperatures at which chiller system pressures are negative with respect to atmosphere.

Figure 3 illustrates the low pressure areas of a typical Trane CenTraVac (model CVHE shown) when the unit is running. Air and moisture may leak into the machine through these low pressure areas. Once it enters the chiller, the air will accumulate in the condenser during machine operation. The air in the condenser increases condensing pressure, thereby reducing the chiller's efficiency and cooling capacity.

The Purifier Purge is a device mounted externally to the chiller. It consists basically of a tank, inlet and outlet valves, and a refrigeration system. The purge tank is connected to the chiller condenser by supply and return lines through which refrigerant may freely flow. The purge refrigeration system has its evaporator located inside this tank. The purge evaporator coil presents a cold condensing surface to the chiller refrigerant contained in the tank. When the purge is running, chiller condenser refrigerant is attracted to the cold surface of the purge evaporator. When the gaseous refrigerant contacts the surface of the purge evaporator it condenses into a liquid, leaving a partial vacuum behind. More condenser refrigerant vapor migrates to fill this vacuum. As the refrigerant condenses into a liquid, any non-condensibles present in the chiller are left behind to fill more and more of the space in the tank. The liquid refrigerant returns to the chiller condenser via the liquid return line. Increasing quantities of non-condensibles present in the purge tank reduce the heat transfer capability of the purge evaporator coil, and the purge compressor suction temperature decreases. This temperature is monitored to activate the pumpout compressor to remove the accumulated air. When enough air has been removed, the increasing purge refrigerant compressor suction temperature terminates the pumpout cycle.

The Purifier Purge will track the pumpout activity for a given machine as an indicator of air leakage into the chiller. This feature is provided to inform the machine operator of purge activity. The ability to monitor purge operation is an important feature of the Purifier Purge unit.

IMPORTANT: "Normal" average pumpout time for PRGB and PRGC model purges installed on typical CFC-11 or HCFC-123 chillers is approximately 15 minutes per day for a one week period. This value, however, will vary widely depending on chiller size, operating conditions, and operating schedule. The purge activity for each individual chiller should be carefully monitored for an appropriate period of time (one week or more) in order to establish a baseline value for PURGE MAXIMUM PUMPOUT RATE appropriate for that individual installation. The PURGE MAXIMUM PUMPOUT RATE should be set high enough to avoid nuisance trips, but low enough to trigger an alarm diagnostic should the pumpout rate suddenly increase. The "Troubleshooting" section and the chiller purge history should be carefully reviewed before a decision is made to shut down the chiller for leak testing and repair.

Purifier Purge Subsystems

From a functional standpoint, the purge system can be divided into four subsystems of components. There are:

- Heat Transfer Circuit
- Purge Tank
- Pumpout System
- Purge Control System

These four subsystems and their component parts are shown in Figure 4 and discussed in the following material.

Figure 2
Temperature/Pressure Relationship for Common Refrigerants

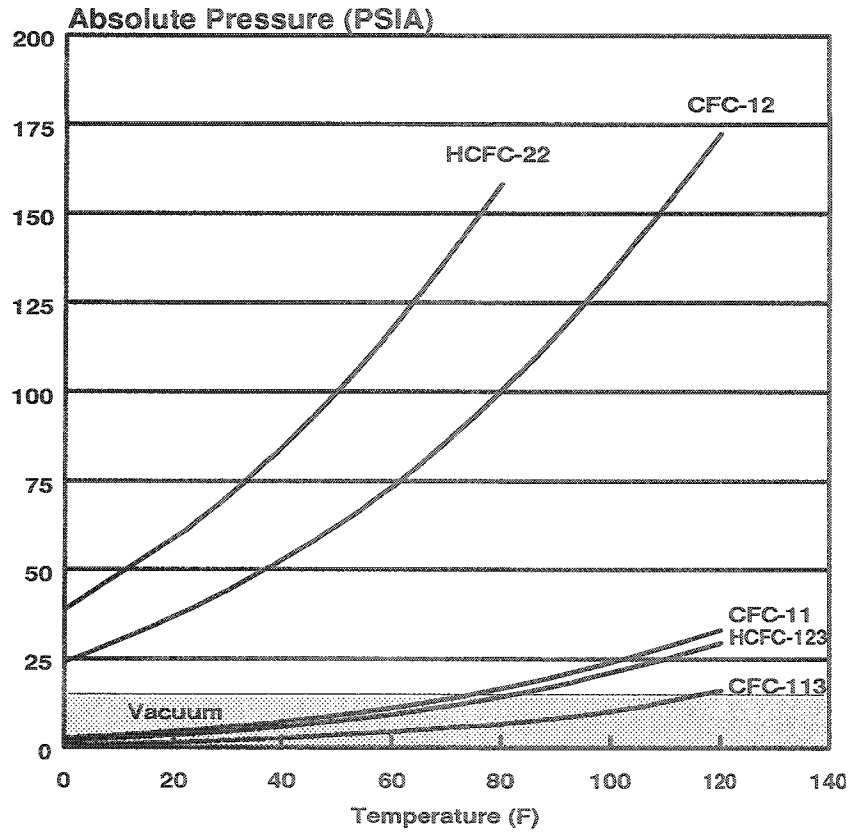

Figure 3
Low Pressure Areas of Operating CVHE Unit

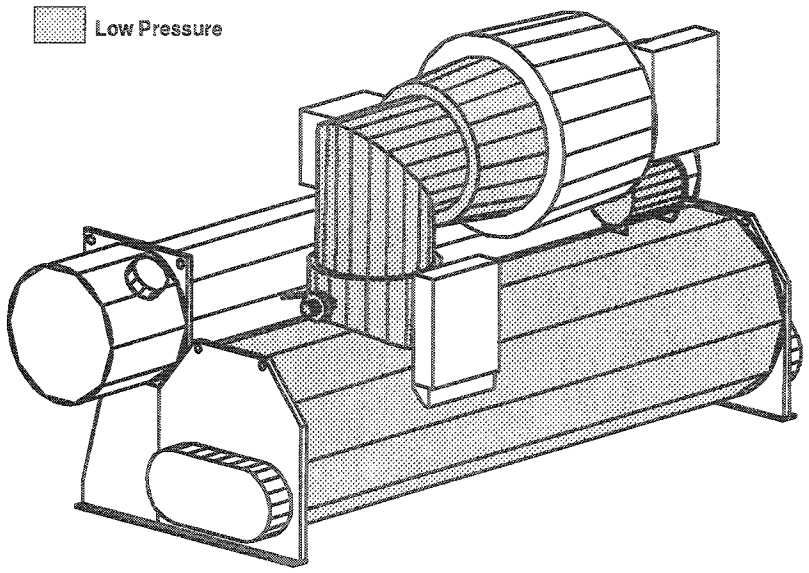

Figure 4 Purifier Purge Component Layout

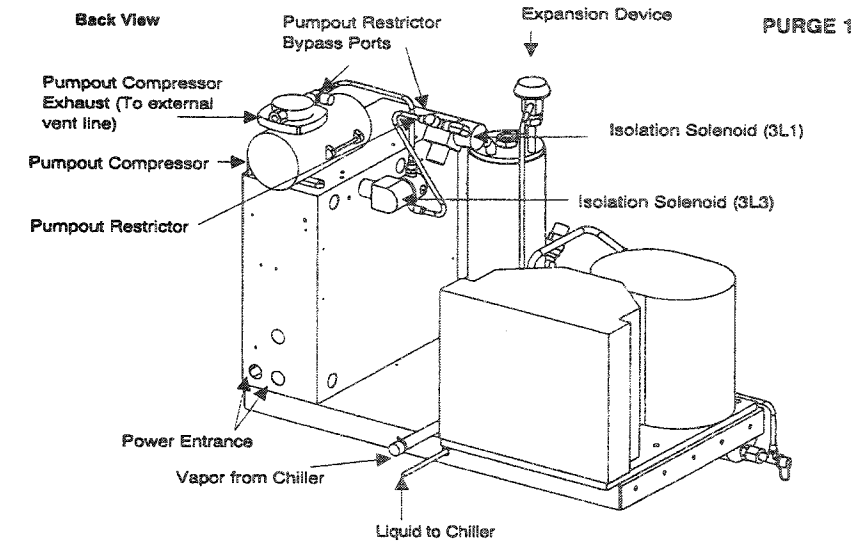

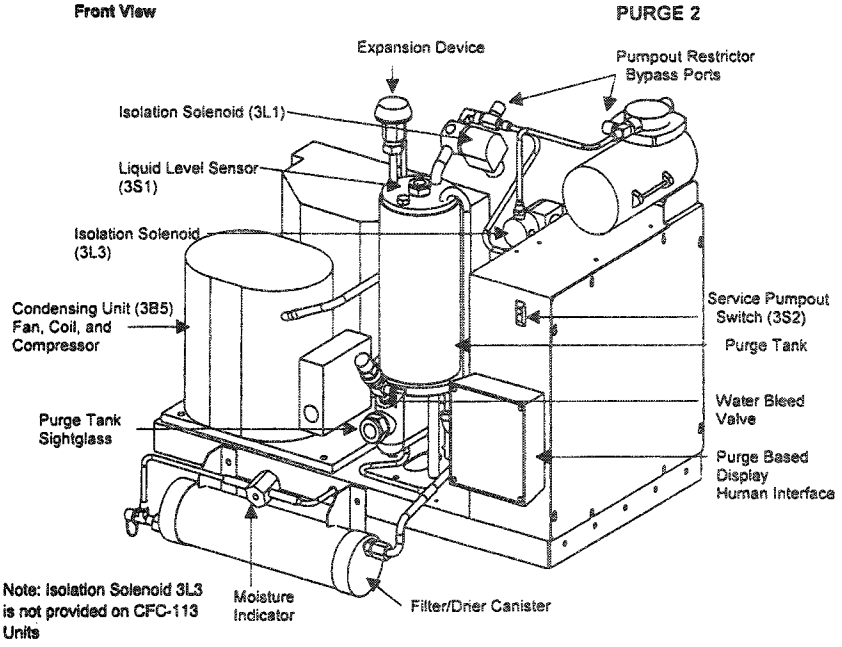

Heat Transfer Circuit

The portion of the purge that removes heat from the circulating purge refrigerant and transfers it to the atmosphere is the heat transfer circuit. This is an enclosed refrigerant circuit consisting of an air-cooled condensing unit (compressor, fan and condensing coil), an expansion device, and a coil in the purge tank (evaporator).

The air-cooled condensing unit provides cooling for the purge coil (3/8-inch copper tubing coil in the purge tank). In conjunction with the purge coil, it is the cooling source that draws the refrigerant from the chiller condenser for the separation of non-condensibles.

The coil in the purge tank acts as an evaporator from the standpoint of the heat transfer circuit, and as a condenser from the standpoint of the chiller refrigerant.

The condensing unit operates effectively over an ambient temperature range of 40°-120° F. As ambient temperature increases, condensing unit capacity decreases, reducing the rate at which the purge will remove air from the chiller (Figure 5).

Note: Because the Purifier Purge utilizes an air-cooled condenser, it is operable whether the chiller is running or not. No additional cooling source is required (e.g. water hookup).

IMPORTANT: No water connections are required to the Purifier Purge.

⚠ WARNING

HOT SURFACES
SURFACE TEMPERATURES MAY EXCEED 150 F ON CONDENSING UNIT
Contact of bare skin with hot surface may result in minor to severe burns.

Figure 5
Purifier Purge Operating Limits

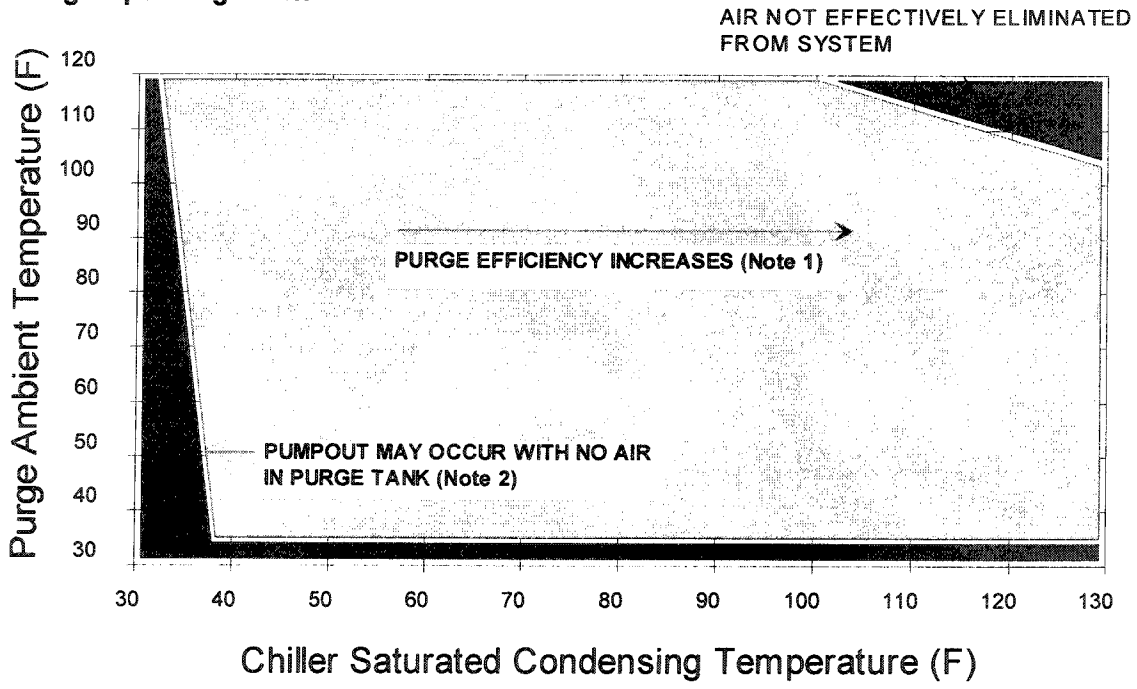

Notes:
1. Lowest amount of refrigerant loss during pumpout.
2. Low Liquid Temperature Inhibit protects against operation under these conditions.

Purge Tank

The purge tank consists of a cooling coil, water separation tube, sight glass, connections for the refrigerant gas from the chiller condenser and a liquid refrigerant return line to the chiller condenser, and a water bleed valve and air discharge port. Air and water are separated from the refrigerant vapor and accumulated in the purge tank.

The purge tank is a condenser from the perspective of the chiller, but serves as a DX-type evaporator in the purge refrigerant circuit.

Heat is transferred out of the chiller vapor, condensing it, and is transferred into the colder refrigerant of the purge circuit, first evaporating and then superheating it.

Air within the tank decreases the effectiveness of this heat transfer, decreasing the exit superheat of the purge refrigeration circuit. When the superheat decreases to 18° F, enough air is deemed to be present to initiate a pumpout cycle.

The water separation tube assembly (Figure 7) serves as both a trap to prevent the "short circuiting" of chilled vapor through the purge tank, and as a means to separate excessive quantities of water which may be present. This trapped water may be removed via the water bleed valve in the sump. Dissolved water remaining in the liquid refrigerant is removed in the filter-drier.

Pumpout System

The pumpout system consists of a small pumpout compressor, two isolation solenoids, and a restriction device located at the pumpout compressor suction connection. When the purge control system detects the presence of air in the purge tank, the isolation solenoids are opened and the pumpout compressor is turned on. The compressor and a restriction device, shown in Figure 6, cause the purged air to be removed slowly. This slow air removal process enhances the efficiency of the purge system. The standard pumpout compressor is compatible with both CFC-11 and HCFC-123. An alternate pumpout compressor and restrictor are available for CFC-113 applications.

Note: Trane recommends using 3/8-inch copper tubing to connect the purge pumpout compressor exhaust to the chiller rupture disc vent line. If the optional Purifier Plus is installed, 3/8-inch copper tubing should be used to connect the purge pumpout compressor exhaust to the Purifier Plus, with 3/8-inch copper tubing from the Purifier Plus to the chiller rupture disc vent line.

Purge Control System

The purge control system is comprised of a microprocessor control module mounted in the purge control box and a human interface. For purges operating with UCP2 controls, purge information is displayed on the UCP2 human interface. For purge based display installations, a separable purge display panel is provided. This purge based display human interface may be remotely mounted from the purge in any convenient operating location.

A service switch is mounted on the purge control box. This manual switch will start the pumpout system. All other control functions and data access are controlled through the purge human interface.

Purge operating controls located inside the purge control panel are:

- Microprocessor module
- Transformer
- Terminal strip

Purge operating controls not located inside the purge control panel are:

- Service switch 3S2 for manual operation of pumpout system
- Isolation solenoid valves 3L1 and 3L3
- Purge based display human interface
- Liquid level sensor 3S1
- Temperature sensors 3RT2

The location of these items is shown in Figures 4 and 6.

Note: Solenoid valve 3L3 is not used on CFC-113 Purifier Purge units.

Figure 6
Purifier Purge Control Box Layout

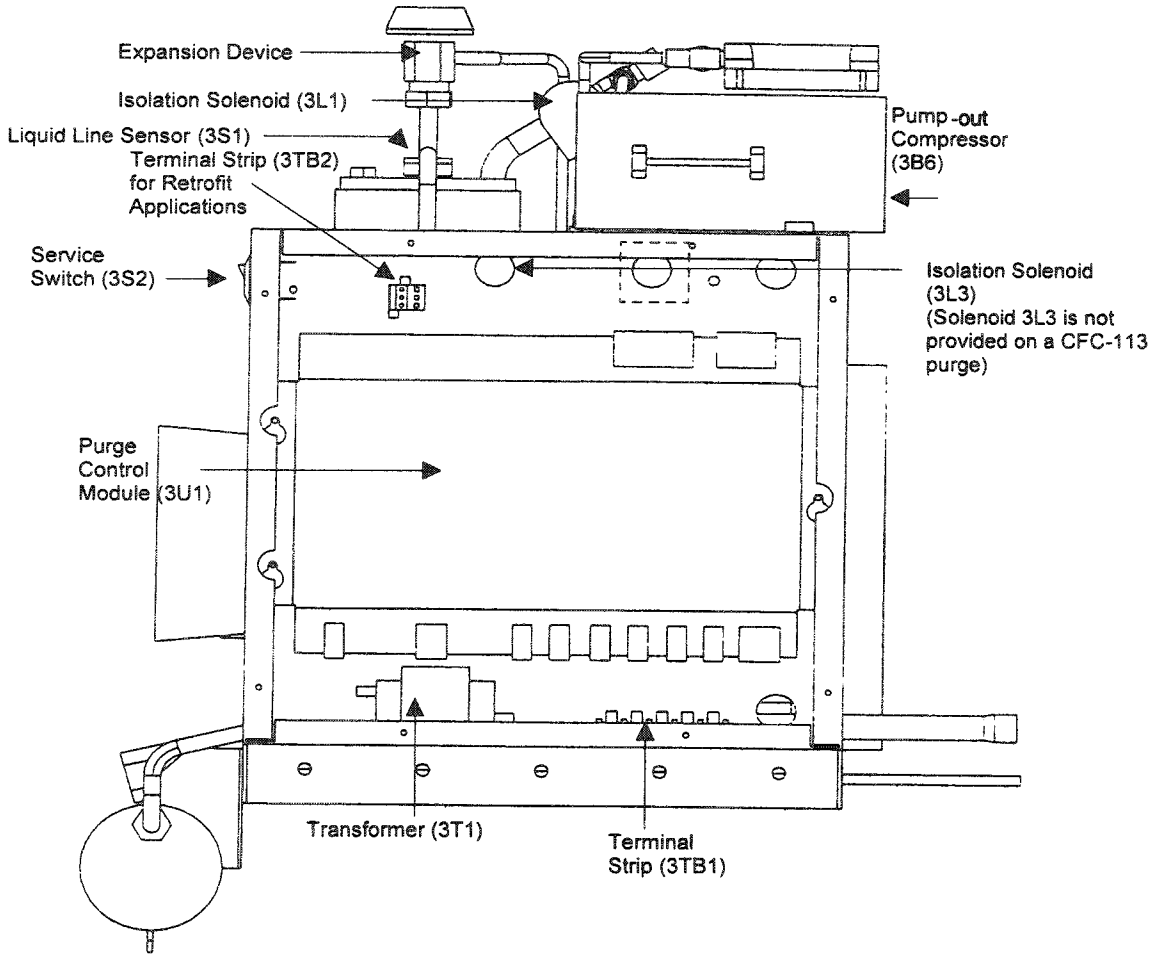

Operating Principles

General

The purge is active when the purge condensing unit is powered. The condensing unit is used to condense refrigerant vapor in the purge tank. The condensing refrigerant lowers the pressure in the tank, drawing vapor from the chiller condenser. The vapor carries non-condensibles and moisture into the purge tank.

Refrigerant vapor enters the purge tank through a 5/8-inch line connected at the bottom of the purge tank (Figure 7). Once inside the tank, the refrigerant vapor condenses on the purge tank coil and falls to the bottom of the tank. Non-condensibles accumulate in the purge tank only when there is air in the chiller condenser.

A layer of liquid refrigerant is maintained in the bottom of the purge tank during purge operation. The refrigerant liquid level is determined by the height of the liquid refrigerant standpipe in the purge tank. When the purge is running, the liquid level is visible in the purge sump sight glass.

Note: Free water in the purge sump is an uncommon occurrence. Liquid water is less dense than liquid refrigerant and will "float" on top of the liquid refrigerant. It may be seen during purge start-up, if major leaks occur, or if the filter drier is saturated.

Figure 7
Purge Tank Refrigerant Flow

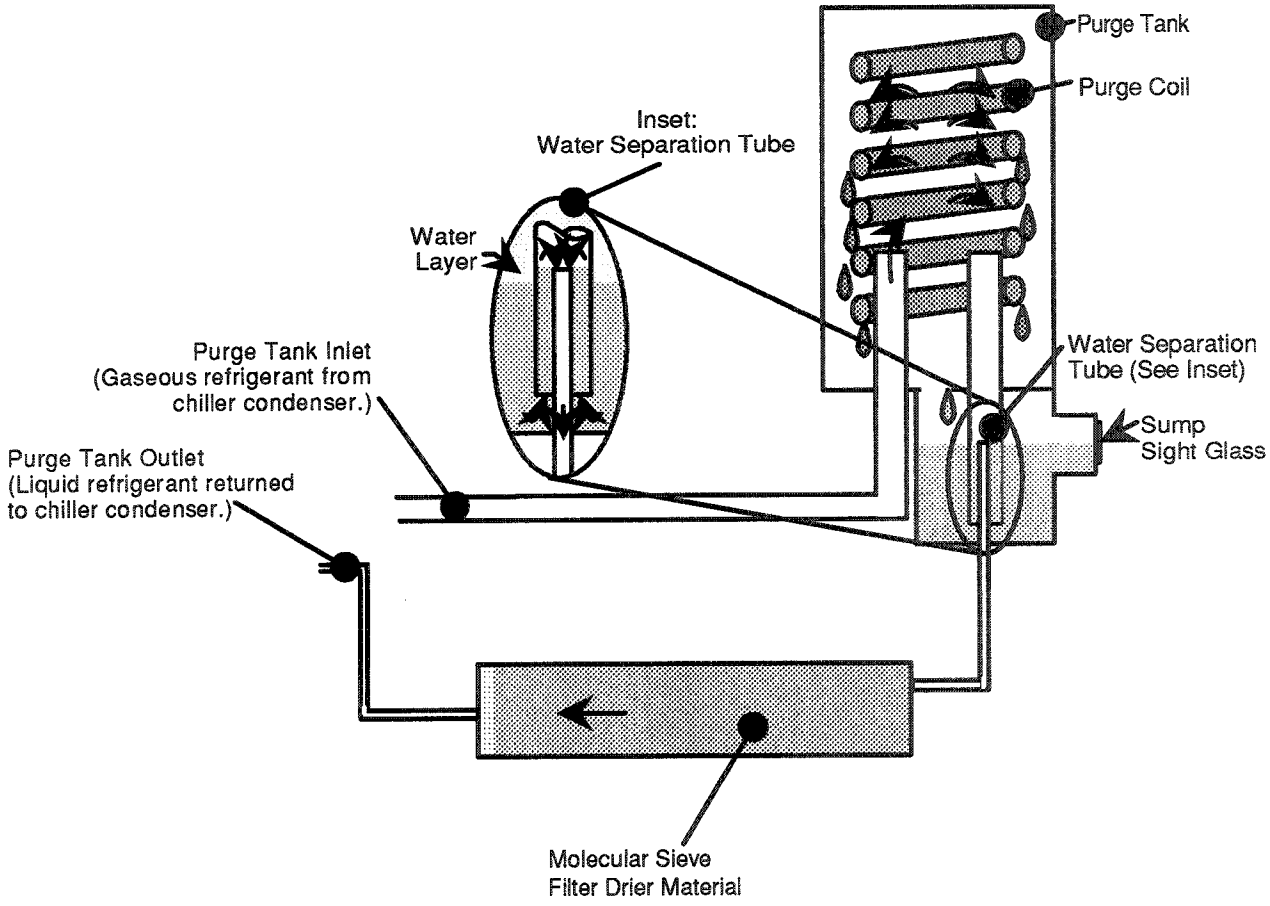

Operating Cycle

The following discussion describes the Purifier Purge unit operating cycle at typical conditions (70 F ambient, 8 psig chiller condensing pressure). Figure 8 illustrates the cycle of the active purge (condensing unit compressor running). The conditions that should exist at points 1 through 5 in Figure 8 are:

- Point 1 = 0 F
- Point 2 = greater than 22 F
- Point 3 = 140 F
- Point 4 = 85 F
- Point 5 = 75 F

The purge condensing unit compressor suction temperature varies with the amount of air in the purge tank. When the amount of air present in the purge tank limits the available condensing surface in the tank, the condensing unit compressor suction temperature will fall. The purge module will initiate a pumpout cycle when the suction temperature reaches 18 F. The air in the purge tank is then vented from the purge tank. As air is removed from the purge tank, condensing unit compressor suction temperature increases to terminate the pumpout cycle.

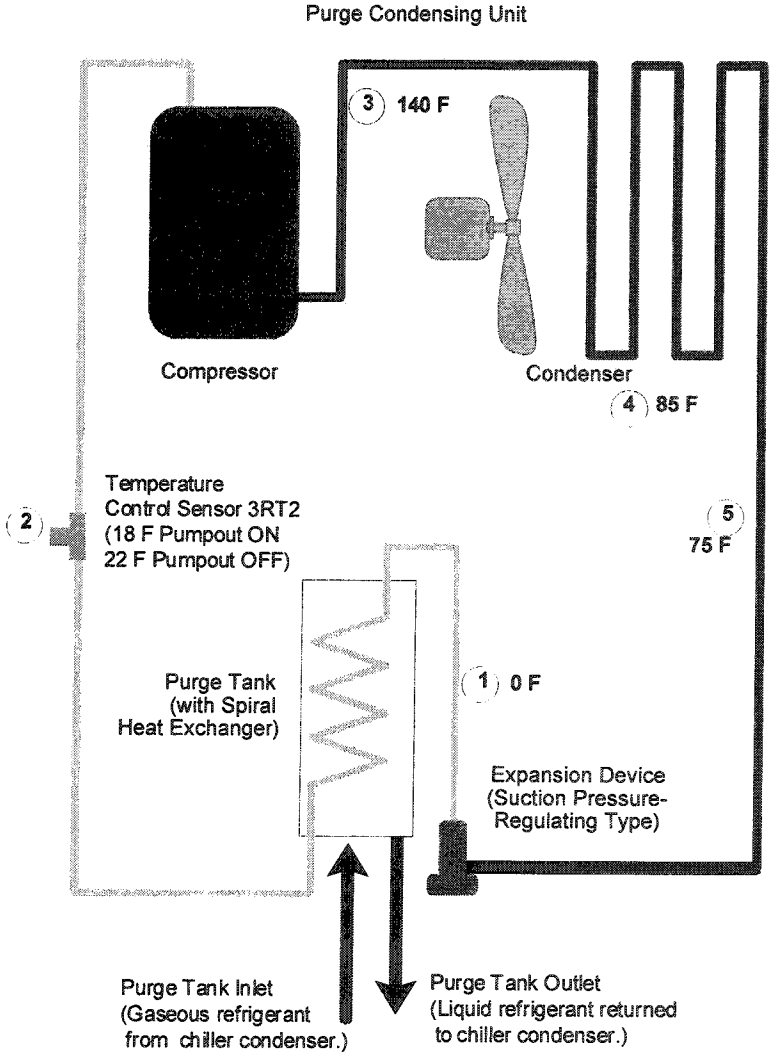

Figure 8
Purifier Purge Refrigerant Circuit Schematic

Operating Limits

Purge efficiency is dependent upon the chiller condenser pressure. Purge efficiency increases as the chiller condenser pressure increases. Figure 5 illustrates the purge operating limits and relative efficiency.

The Trane Purifier Purge can operate with a chiller saturated condensing temperature between 40 - 130 F (Figure 5).

Higher saturation temperatures and corresponding higher chiller condensing pressures result in less refrigerant lost to the atmosphere when air is purged.

Lower saturation temperatures result in more refrigerant loss when air is purged, decreased suction superheat to the condensing unit compressor, and increased pressure ratio on the pumpout compressor.

In the AUTO mode, the purge will run whenever the chiller is running. Continuous purge operation (mode set to ON) is intended for use primarily during service procedures as described in "Maintenance". The ADAPTIVE operating mode will run the purge at various times when the chiller is both operational and off. The purpose of the ADAPTIVE control is:

- To limit how often the purge is run (to save energy)
- Run the purge during chiller shutdown to insure air is removed from the chiller
- Keep pumpout statistics to help diagnose chiller leak patterns.

IMPORTANT: Do not operate the purge when saturation temperatures are less than 40 F as seen when ice storage units are turned off or when a chiller is operating in free-cooling mode. The low liquid temperature setting provides automatic lockout based upon saturated condensing temperature.

Air Removal

Figure 9 illustrates the air removal cycle as air accumulates in the purge tank.

When there is no air in the purge tank, the refrigerant returning to the purge condensing unit compressor suction has a high superheat. As air accumulates in the tank, displacing the refrigerant vapor, the effective coil surface exposed to vapor decreases, reducing available superheat at the purge condensing unit compressor suction.

When condensing unit compressor suction temperature reaches 18 F, the purge control activates the isolation solenoids and the pumpout compressor to remove the accumulated non-condensibles. As air is removed from the purge tank, the coil is once again exposed to refrigerant vapor. The purge condensing unit compressor suction temperature rises and turns off the pumpout system. Pumpout cycle duration is typically 40 to 60 seconds.

Figure 9
Purge Tank Air Vs. Condensing Coil Superheat

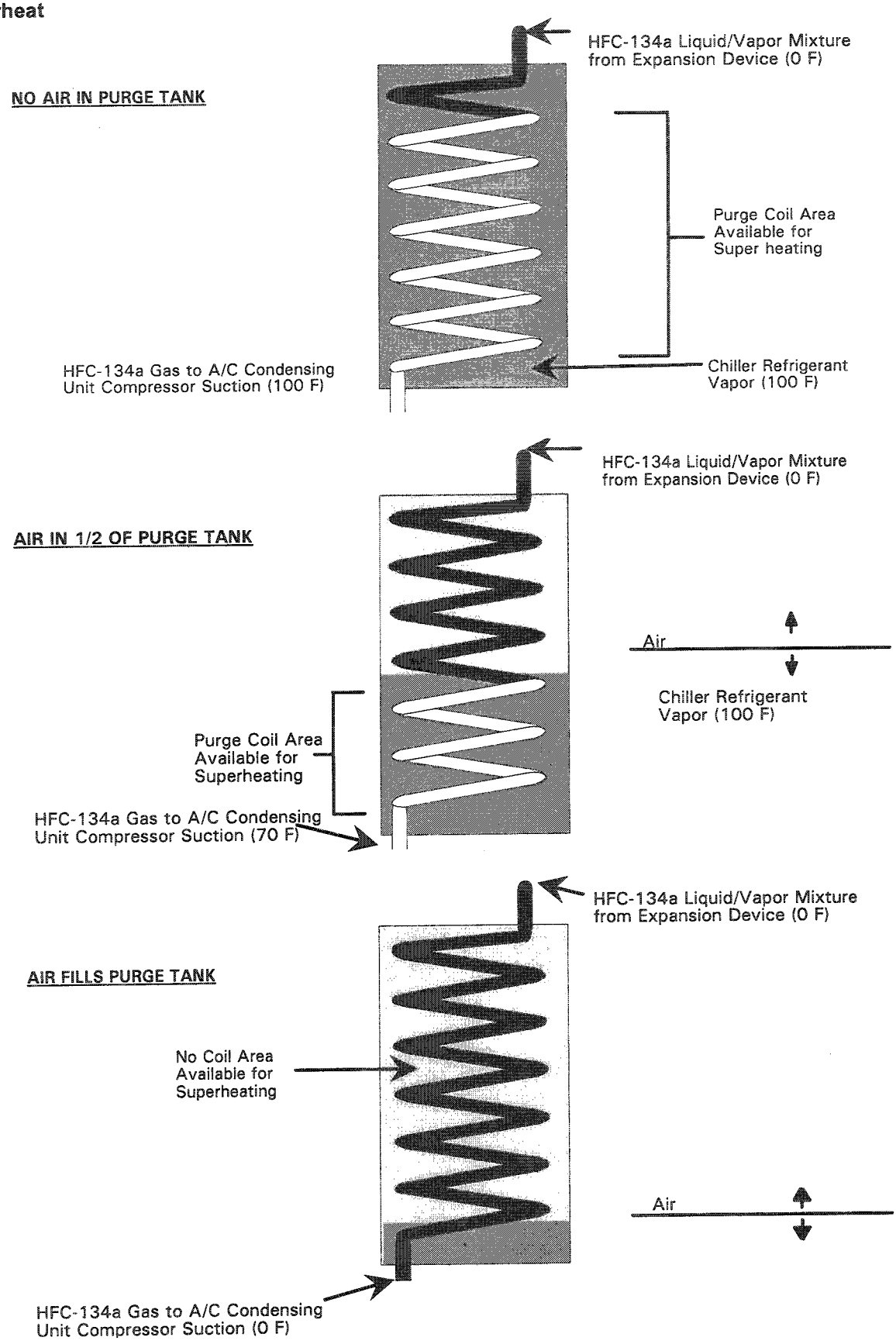

Moisture Monitoring and Removal

A moisture indicator is provided in the liquid return line from the purge tank to the chiller condenser. This allows the machine operator to monitor the quality of the liquid refrigerant in the chiller.

Inspect the moisture indicator periodically. The indicator will show "wet" whenever the chiller moisture level exceeds the levels shown in Table 1. Notice that the indicator becomes more sensitive as the temperature decreases. (The moisture indicator normally operates at equipment room ambient temperatures.) A "wet" indication for more than 72 hours typically indicates that the filter drier is saturated and should be replaced.

Consult the moisture indicator only under these conditions:

1. The chiller is operating
2. The purge unit is operating and has been allowed sufficient time to remove system moisture properly (minimum of 72 hours after replacing filter-drier cores).

The filter drier dehydrates the refrigerant passing through the purge and prevents moisture from re-entering the chiller. The nominal life of the filter drier is one year and should be replaced once the cores become saturated, refer to the "Drier Core Replacement" and "Filter-Drier Assembly Replacement" sections of this manual. If the filter drier becomes saturated and the moisture indicator shows "wet" refrigerant, water will accumulate in the purge sump. Due to the small volume of the purge tank sump, free water will typically form a visible layer on top of the refrigerant and be visible in the purge tank sump sight glass. This free water must be removed to avoid corrosive conditions in both the purge and the chiller. To remove moisture from the purge sump refer to the "Service Procedures" section of this manual.

Table 1
Refrigerant Moisture Content As Determined By Moisture Indicator

Refrigerant	CFC-11			HCFC-123		
Moisture Level	75° F	100° F	125° F	75° F	100° F	125° F
Dry	Below 5	Below 10	Below 20	Below 20	Below 30	Below 35
Caution	5-15	10-30	20-50	20-50	30-80	35-100
Wet	Above 15	Above 30	Above 50	Above 50	Above 80	Above 100

Note: Refrigerant Moisture content given in parts per million (ppm)

Maintenance

Periodic Maintenance

The following information describes the maintenance requirements of the Purifier Purge. To assure efficient and reliable purge operation, perform all inspections and procedures at the prescribed intervals. Keep a record of all inspection results to establish proper service intervals and document changes that occur in purge activity that could reflect on chiller performance.

The following sections describe the required periodic maintenance:

- Weekly
- Semi-Annually
- Annually

⚠ WARNING
LIQUID OR VAPOROUS REFRIGERANT
CLOSELY FOLLOW ALL SAFETY PROCEDURES DESCRIBED IN THE MATERIAL SAFETY DATA SHEET FOR THE REFRIGERANT AND TO ALL LABELS ON REFRIGERANT CONTAINERS.
Failure to follow all safety procedures for refrigerant may expose operating and/or servicing personnel to liquid and/or vaporous refrigerant. Inhalation of, or skin exposure to refrigerant can cause injury or death.

⚠ WARNING
HAZARDOUS VOLTAGE!
NEVER OPEN ACCESS PANELS TO INSPECT OR SERVICE THE UNIT WITHOUT FIRST OPENING ALL DISCONNECT SWITCHES.
Failure to open all disconnect switches before inspection or servicing can cause injury or death due to electrical shock.

⚠ WARNING
HOT SURFACES
SURFACE TEMPERATURES MAY EXCEED 150 F ON CONDENSING UNIT.
Contact of bare skin with hot surface may result in minor to severe burns.

Weekly

1. With the purge unit operating, check the purge tank condensing activity by observing the liquid level in the sump sight glass. In addition, liquid refrigerant flow should be visible in the moisture indicating sight glass located in the liquid line immediately after the filter drier canister. The liquid refrigerant flow and level in the sump sight glass may vary.
A lack of refrigerant flow in the drain line sight glass indicates:

- a pumpout cycle is necessary, or,
- a problem exists with the purge heat transfer circuit (air-cooled condensing unit, expansion device or purge tank coil), or,
- a problem exists with the purge control circuit, or,
- refrigerant vapor from the chiller condenser to the purge tank is restricted.

2. Check the moisture indicator on the purge liquid return line. If moist refrigerant is indicated, replace the filter-drier. Refer to "Filter-Drier Replacement" in the "Service Procedures" section.

Note: The need for frequent change of the filter drier indicates the possibility of significant chiller tube or air leaks.

3. Check refrigerant in the purge tank sump for water. If water is present, there will be a visible line of separation between the water and the refrigerant in the tank. Remove any free water from the purge tank. (Refer to "Service Procedures" in this section).

Note: The need for removal of water indicates the possibility of significant chiller tube or air leaks

Semi-Annually

Inspect the air-cooled condenser coil and clean as needed. Clean the coil from the fan side using compressed air or coil cleaner. A fouled coil will reduce purge efficiency and capacity.

Annually

1. Perform the purge system control check described in "Control Circuit Test" in the "Troubleshooting" section.

2. Perform "Purge Tank Checkout and Water Removal" as described in the "Service Procedures" section of this manual.

Service Procedures

This section describes specific procedures that must be performed as part of the maintenance program of the purge system.

The following sections describe the required service procedures:

- Purge Tank Checkout and Water Removal
- Drier Core Replacement
- Filter Drier Assembly Replacement
- Purge Pumpout and Fault Check
- Purge Operation After Major Chiller Repairs
- Bypassing Pumpout Restrictor

Purge Tank Checkout and Water Removal

1. Isolate the purge by closing the valves on the purge vapor inlet and liquid return lines (between the chiller condenser and the purge tank).

2. With the purge condensing unit turned off, pressurize the purge tank through the water bleed valve located on the tank sump to a maximum of 15 psig and test the solenoid valves to insure they seal properly.

3. Check the purge tank sump sight glass for water.

If no water is visible, proceed to "Drier Core Replacement" or "Filter-Drier Assembly Replacement".

If a layer of water is visible on the refrigerant in the purge sump sight glass:

a. With the purge tank isolated from the chiller, pressurize the purge tank through the water bleed valve with dry air or nitrogen to a maximum of 15 psig. Close valve to contain pressure within purge. Disconnect nitrogen and connect a refrigerant hose from the angle valve to a suitable approved containment vessel. Open water bleed valve. The water and a small amount of refrigerant will flow into the containment tank.

⚠ WARNING

EXCESSIVE PRESSURE
DO NOT PRESSURIZE THE PURGE TANK IN EXCESS OF 15 PSIG.
Exceeding 15 psig can damage the unit and/or result in personal injury or death.

Note: An alternative to pressurizing the purge tank is to draw a vacuum on a suitable containment vessel and use the pressure differential to draw the water out of the sump.

b. Connect a suitable vacuum pump to the containment tank with the pump discharging back into the chiller or another suitable container. Pull a vacuum to 25 inches of mercury on the refrigerant and water mixture. The refrigerant will boil off, leaving only the water in the vessel.

Note: Do not pull a vacuum deeper than 25 inches of mercury as this will cause the water to also boil.

Drier Core Replacement

Following are maintenance instructions for **replaceable filter drier cores.**

Two high-water-capacity filter drier cores are inside the canister (Figure 10) located on the front of the purge unit. The following procedure should be followed when installing or changing the cores.

1. Isolate the purge unit from the chiller.

2. Drain the canister of liquid refrigerant prior to opening. Use available pressure differential whenever possible or use nitrogen to raise the pressure inside the purge to slightly higher than chiller condenser. Connect a refrigeration hose to the 1/4 in. schrader drain fitting (Figure 10) on the end of the canister and also to a service valve on the chiller evaporator. Open the chiller valve and drain the canister.

3. Remove the refrigerant vapor inside the canister by connecting the suction side of a vacuum pump to the schrader drain fitting and the pump discharge to the chiller. Pull a vacuum for approximately 30 minutes.

Note: Due to the slow out-gassing of refrigerant from the cores, it will not be possible to pull and hold a deep vacuum.

4. Remove the canister end cap (Figure 10) and remove the cores. Butyl gloves are recommended when handling cores because of direct contact with refrigerant. Immediately after removing the cores, they should be placed in a sealable container for storage and disposal in accordance with local regulations.

5. Clean the inside of the canister and the drain screen (Figure 10) as necessary.

6. Install new cores and gaskets making sure the canister cover is installed with the drain at the bottom.

Note: The drier-cores adsorb water vapor from ambient air, so they are shipped in sealed containers. Do not open them until immediately before they are installed and sealed in the canister.

7. Pressurize the purge with dry air or nitrogen to 10 psig through the water bleed valve and check for leaks. Release the pressure.

8. Set mode to ON and wait for the pumpout compressor to start.

9. Open the valves on the purge vapor tank inlet and liquid return lines at the chiller.

Figure 10
Filter-Drier Canister Assembly

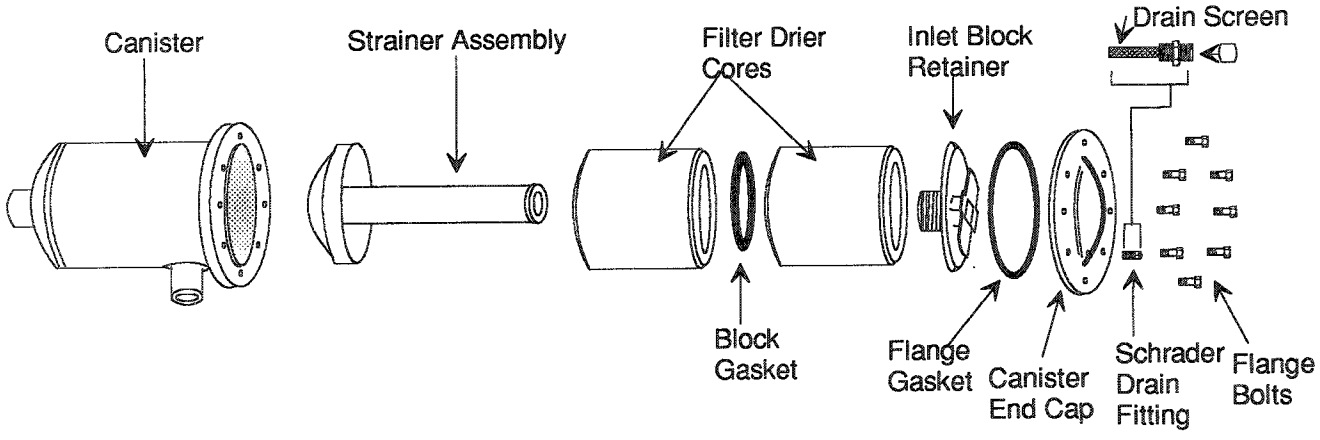

Filter-Drier Assembly Replacement

Following are maintenance instructions for **filter drier assembly replacement**.

1. Isolate the purge unit from the chiller.

2. Drain the filter drier of liquid refrigerant prior to opening. Use available pressure differential whenever possible or use nitrogen to raise the pressure inside the purge to slightly higher than chiller condenser. Connect a refrigeration hose to the 1/4 in. schrader drain fitting (Figure 11) located at the outlet end of the filter drier and also to a service valve on the chiller evaporator. Open the chiller valve and drain the filter drier.

3. Remove the refrigerant vapor inside the filter drier by connecting the suction side of a vacuum pump to the schrader drain fitting and the pump discharge to the chiller. Pull a vacuum for approximately 30 minutes.

Note: Due to the slow out-gassing of refrigerant from the filter drier, it will not be possible to pull and hold a deep vacuum.

Note: The filter drier adsorbs water vapor from ambient air, so it is shipped with caps on each end. Do not remove these caps until immediately before installation.

4. Remove the screws connecting the filter drier brackets to the Purifier Purge base. Loosen the nuts at each end of the filter drier and slide it out from the adjacent tubing. Immediately cap the two ends with the caps from the replacement filter drier. Dispose of the old filter drier in accordance with local regulations.

5. Install new filter drier using new o-rings supplied with assembly.

6. Pressurize the purge with dry air or nitrogen to 10 psig through the water bleed valve and check for leaks. Release the pressure.

7. Set mode to ON and wait for the pumpout compressor to start.

8. Open the valves on the purge vapor tank inlet and liquid return lines at the chiller.

Figure 11
Filter-Drier

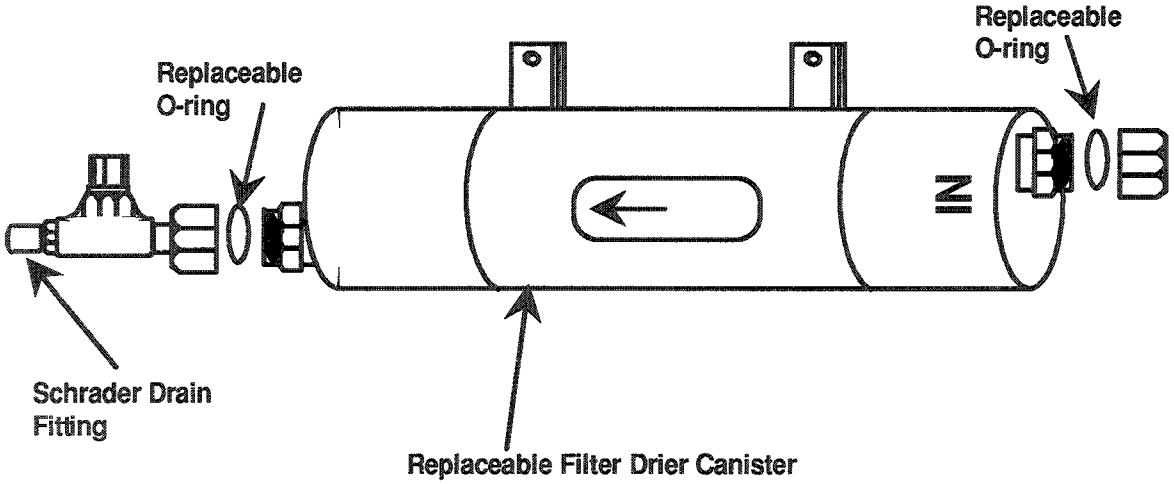

Purge Pumpout and Fault Check

This procedure tests the ability of the purge to remove non-condensibles from the chiller. This is done by isolating the purge from the chiller, adding air to the purge tank, and then using the purge pumpout compressor to remove the air again. Perform the following procedure to verify proper purge pumpout sequencing:

1. Close the shutoff valves on the purge tank inlet and liquid return lines to isolate the purge from the chiller.

2. Disconnect the 1/4-inch line from the inlet of the pumpout compressor.

3. Record current maximum pumpout rate setting, and temporarily change maximum pumpout rate to 2 min/24 hrs.

4. Temporarily shut off power to the purge and disconnect the liquid level sensor 3S1 from the microprocessor unit 3U1. Restore power and set operating mode to ON. The condensing unit should not start.

5. Temporarily shut off power to the purge and reconnect liquid level sensor 3S1 to 3U1. Restore power. The condensing unit should start.

6. Press and hold service switch 3S2 in the MOMENTARY ON position for at least ten seconds, energizing the pumpout solenoids and pumpout compressor. The purge will draw air into the purge tank back through the isolation solenoid valves. Repeat this procedure until sufficient air is drawn into the purge tank to reduce the compressor suction temperature to 18 F as indicated on the human interface. At this point the pumpout compressor should start and run.

7. Set operating mode to STOP. Reconnect the 1/4-inch line at the inlet of the pump-out compressor and tighten to 5-7 ft-lbf. Open the shutoff valves on the purge tank inlet and liquid return lines.

8. Set operating mode to ON. Monitor compressor suction temperature. The pumpout compressor should stop when the compressor suction temperature reaches 22 F.

9. Continue to monitor pumpout time. When the total pumpout time reaches 2 minutes, the unit should display a MAX PUMPOUT RATE EXCEEDED diagnostic and stop.

10. Restore the maximum pumpout rate setting to its original value and reset the MAX PUMPOUT RATE EXCEEDED diagnostic. Set the operating mode to the desired value.

Purge Operation After Major Chiller Repairs

This section describes specific procedures that must be performed when the chiller refrigerant system has been opened to atmosphere.

In those situations where air has entered the chiller during servicing, it will have to be removed before the chiller can be started. The purge will do this in two stages; the "continuous-operation" stage and the "intermittent-operation" stage.

Go to the setup menu and set the PURGE DISABLE PUMPOUT ALARM FOR XX HRS to an appropriate value (programmable from 1 to 72 hours in 1 hour increments). Typically, 24 hours is sufficient.

This mode will allow the purge to pump-out for extended periods of time without signaling a diagnostic for excessive pump-out time. The PURGE DISABLE PUMPOUT ALARM FOR XX HRS mode will automatically de-energize after the selected time period.

The restrictor present in the pumpout circuit may be bypassed to decrease required pumpout time. It is recommended that this be done during initial startup of the purge or chiller and whenever a service procedure may have resulted in excessive air in the unit. Refer to "Bypassing Pumpout Restrictor" in this section.

When large amounts of non-condensibles are present in the chiller, purging efficiency can be enhanced by increasing refrigerant pressure in the purge tank. This can be done by operating the chiller as soon as practical or by circulating warm water (less than 100 F) through the chiller evaporator tube bundle. The amount of time that the purge pumpout compressor operates continuously will vary, depending on the initial pressure level and the quantity of non-condensibles in the chiller. Initially, the pumpout compressor operates continuously due to the large amount of non-condensibles and relatively small amount of refrigerant being drawn into the purge tank. It may be several hours before the pumpout compressor cycles off for the first time.

Excessive continuous pumpout may be caused by:

- Large amounts of non-condensibles in the chiller
- Leaks in the tubing between the purge tank and the pumpout compressor. Leak check tubing and bypass restrictor to remove excess air.

Once the level of non-condensibles present in the chiller falls to a point where increasing amounts of refrigerant are entering the purge tank, the temperature control in the purge control system will begin to cycle the pumpout compressor on and off. As the refrigerant in the system becomes less contaminated with non-condensibles, purge pumpout is activated less frequently.

If the chiller is suspected to contain excessive amounts of moisture, several filter-drier cores or filter-drier assemblies may be required to completely remove the moisture.

Bypassing Pumpout Restrictor

The pumpout restrictor may be bypassed to accelerate non-condensible removal. However, this is a manual operation that will reduce the air separation efficiency of the purge. To bypass the restriction device:

Remove the caps on the two pumpout restrictor bypass ports shown in Figures 4 and 6 and temporarily connect a bypass hose.

Note: This should be done for only a short period since bypassing the pumpout restrictor reduces purge separation efficiency. Ensure that the caps on the bypass ports are reinstalled tight and leak free before returning purge to normal operation.

Troubleshooting

Troubleshooting Procedures

If operational difficulties are encountered, use the diagnostic chart and checkout procedures to determine the cause and correct the problem.

The following sections provide troubleshooting resources:

- Troubleshooting Chart
- Refrigerant System Diagnostic Procedure
- Control Circuit Test

⚠ WARNING

LIQUID OR VAPOROUS REFRIGERANT
CLOSELY FOLLOW ALL SAFETY PROCEDURES DESCRIBED IN THE MATERIAL SAFETY DATA SHEET FOR THE REFRIGERANT AND TO ALL LABELS ON REFRIGERANT CONTAINERS.
Failure to follow all safety procedures for refrigerant may expose operating and/or servicing personnel to liquid and/or vaporous refrigerant. Inhalation of, or skin exposure to refrigerant can cause injury or death.

⚠ WARNING

HAZARDOUS VOLTAGE!
NEVER OPEN ACCESS PANELS TO INSPECT OR SERVICE THE UNIT WITHOUT FIRST OPENING ALL DISCONNECT SWITCHES.
Failure to open all disconnect switches before inspection or servicing can cause injury or death due to electrical shock.

⚠ WARNING

HOT SURFACES
SURFACE TEMPERATURES MAY EXCEED 150 F ON CONDENSING UNIT.
Contact of bare skin with hot surface may result in minor to severe burns.

Troubleshooting Chart

The chart that follows is provided to help identify malfunctions that could occur. The chart has three columns:

- the Symptom column describes what the unit is doing
- the Cause column identifies possible sources of the problem
- the Solution column describes what must be done to correct the problem

Symptom	Cause	Solution
Purge diagnostic MAX PUMPOUT RATE EXCEEDED, purge not running, condensing unit iDLE (pumpout operates too long)	Air Infiltration rate into chiller too high. Excessive purging required	Leak-check chiller. Repair Leaks
	Maximum pumpout rate set too low	Determine proper value for chiller and reset. See "Setup"
	Leakage in purge interconnecting pumpout tubing	Check flare nuts for tightness. Tighten to 5-7 ft-lbf. Leak-test and repair tubing
	Chiller refrigerant temperature too low (pumpout below 40 F saturation temperature is not effective)	Do not operate purge unit at or below 40 F saturated refrigerant temperature. Set the low liquid temp inhibit to ENABLE and program setpoint to a higher value
	Isolation solenoids 3L1 or 3L3 fail to open or are restricted. Air is not removed	Repair or replace solenoid coils or valves
	Isolation solenoids 3L1, 3L3 both fail to close and chiller is at a low temperature (air leaks into chiller)	Repair or replace solenoid coils or valves
	Purge isolation valves closed	Open isolation valves
Purge fails to pump out non-condensibles. Running chiller indicates high head pressure i.e., measured condenser pressure is greater than refrigerant saturation pressure corresponding to measured condenser refrigerant temperature and/or chiller surges at start up	Depending on the chiller type and operating conditions, air may accumulate in the chiller condenser away from the purge gas pick-up location	Operate purge with chiller OFF. Any air in chiller will be removed if purge is functioning properly. If a large amount of air is removed, leak-test chiller and repair leaks. Consider using ADAPTIVE mode. This mode will run the purge as required when the chiller is OFF. If non-condensible removal is required during chiller operation refer to "chiller gas/liquid connections"
	Pumpout restrictor clogged	Operate purge with pumpout restrictor bypassed (refer to "Bypassing Pumpout Restrictor"). Clean out restrictor orifice with compressed air (preferred) or a small wire.
	Purge condensing unit is overcharged or undercharged	Refer to "Refrigeration System Diagnostic Procedure" to evaluate purge charge level
	Purge expansion valve has failed	Refer to "Refrigeration System Diagnostic Procedure" to evaluate expansion valve performance
	Pumpout circuit fault	Run diagnostic of purge control circuit. Refer to "Control Circuit Test"
	Condenser fan has failed	Replace fan as indicated
	Condensing unit compressor motor winding temperature sensor opened (may go out on high winding temperature)	Replace temperature sensor or compressor as indicated

Troubleshooting (Continued)

Symptom	Cause	Solution
Purge unit does not run or pumpout system does not run	Control circuit problem	Run diagnostic of purge control circuit. Refer to "Control Circuit Test"
Purge continues to operate when chiller is OFF	Purge in ON or ADAPTIVE mode	ON mode should be used only for certain service procedures. ADAPTIVE is a normal operating mode
	Purge mode in the AUTO setting and the chiller RUN signal failed at high voltage	Check chiller RUN signal
Pumpout compressor operates continuously: Suction temperature is less than 18° F	Excessive air in chiller	Temporarily bypass pumpout restrictor to increase rate of non-condensible removal (refer to "Bypassing Pumpout Restrictor")
	Leakage in purge pumpout tubing	Check all connections between purge tank and pumpout compressor for leaks and repair. Tighten flare nuts to 5-7 ft-lbf.
	Pumpout restrictor plugged	Operate purge with pumpout restrictor bypassed (refer to "Bypassing Pumpout Restrictor"). Clean out restrictor orifice with compressed air (preferred) or a small wire.
	Purge sump sight glass leaking	Replace sight galss, apply hand tool removable Loctite to male threads and torque sight glass to 23-25 ft. lbf.
	Gas pick up connection below liquid level	Refer to "chiller gas/liquid connections"
	Gas pick up line restricted	Ensure shut off valves are fully open and remove any restrictions
	Restriction in exhaust lines	a. Disconnect tubing at pumpout compressor discharge port and clean out tubing with compressor air b. Ensure there are no liquid traps in these lines
Pumpout compressor operates continuously: Suction temperature is greater than 18° F	Suction temperature sensor has failed	Replace as required
	Purge control module has failed	Replace as required
Diagnostic PURGE LIQUID LEVEL TOO HIGH	Liquid accumulation in the 5/8" inlet gas line will cause excessive pressure drop, resulting in high liquid level in the purge tank	a. Ensure 5/8" gas line slopes toward chiller for the entire distance to condenser (1"/ft min). b. Insulate 5/8" gas line if needed. c. If problem persists, contact qualified Trane service representative
	Purge liquid drain line restricted	Remove restrictions from drain line
No refrigerant in purge tank sight glass	Liquid refrigerant may evaporate and migrate back into the chiller with the purge off	Liquid should appear within 10 minutes of continuous purge operation

Symptom	Cause	Solution
Refrigerant level rises above purge tank sight glass	Restriction in the purge inlet gas line or liquid return line	a. Check for restrictions in the 5/8" purge tank inlet line and in the 1/4" liquid return line. b. Ensure that shutoff valves for these lines are fully open. c. Ensure that there are no liquid traps in these lines d. Insulate the inlet gas line
	Liquid drain line restricted	a. Open all valves and remove any restrictions b. Ensure filter drier is not plugged
Free water visible in purge tank sight glass	Filter drier may be saturated with water	Refer to "Purge Tank Checkout and Water Removal". Drain water manually or monitor the moisture indicator. If the condition persists, replace the filter-drier. Refer to "Drier Core Replacement" or "Filter Drier Assembly Replacement". **Note:** Multiple changes of filter drier may indicate need for chiller leak testing and/or additional moisture removal systems. Refer to CTV-SB-63A for suggested alternative in-line refrigerant cleaning systems.
Purge based human interface displays: Mode: ON Status: IDLE	Jumper J6 missing on communication block J1 of module (see wiring diagram, Figure 13)	Install Jumper

Refrigeration System Diagnostic Procedure

If there is concern that one of the components in the purge refrigeration system is not operating correctly, troubleshoot the system by taking surface temperature measurements.

⚠ CAUTION

REFRIGERANT LOSS

TO AVOID REFRIGERANT CHARGE LOSS DO NOT ATTEMPT TO MEASURE PURGE SYSTEM DISCHARGE OR LIQUID LINE PRESSURE.

⚠ WARNING

HOT SURFACES

SURFACE TEMPERATURES MAY EXCEED 150 F ON CONDENSING UNIT.

Contact of bare skin with hot surface may result in minor to severe burns.

The critical temperature measurements needed to diagnose the system properly are shown on the figure below. The temperature at Point 1 may be obtained by moving aside a small portion of the insulation covering the tubing. The condensing unit suction temperature, Point 2, is a part of the purge control system and may be read directly from the purge human interface. The condenser temperature, Point 4, may be measured by reading the surface temperature of the second or third condenser tubing U-bend from the top on the side of the coil opposite the discharge gas inlet.

Note: Use an accurate (±1 F) temperature probe with a range of -10 F to 200 F to take temperature readings. Fasten the sensor of the probe tightly against the tubing surface. Insulate around the probe for accurate results.

The following sections describe diagnostic procedures for these elements of the refrigeration system:

- Charge Level
- Expansion Valve

Charge Level

The purge refrigeration system must have a proper HFC-134a charge before any other refrigerant circuit components may be evaluated.

Suction pressure is not a good indicator of proper charge. The best method to determine charge level is to measure surface temperature at various points on the refrigerant circuit. These points are shown on the figure below.

With the purge condensing unit running, take temperature measurements at Points 4 and 5. The difference between these two values is the subcooling. This value should be between 5 and 15 F with the proper refrigerant charge in the system.

- A subcooling value of less than 5 F indicates a refrigerant undercharge and a probable leak
- A subcooling value greater than 15 F indicates a refrigerant overcharge

Expansion Valve

With the purge condensing unit operating, the expansion device will reliably regulate the low side of the purge refrigerant system, even with a relatively wide range of variation in refrigerant charge.

The purpose of the expansion valve is to regulate refrigerant flow to maintain a constant pressure within the purge tank coil. To determine if the expansion valve is operating properly, measure temperature at Point 1 on the figure below. An optimum constant temperature of 0 F should be measured at this point. However, depending upon operating conditions and or measurement error a measurement between -5 F and 10 F is acceptable.

Critical Temperature Measurement Locations

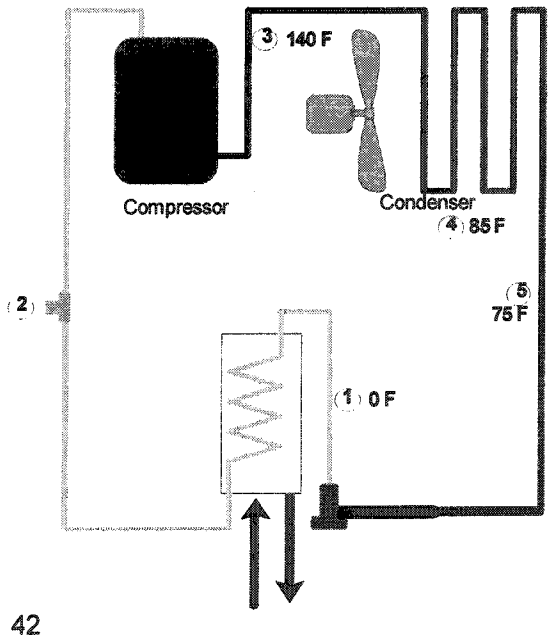

Chiller Gas/Liquid Connections

Gas/Liquid connections must be properly located on the chiller condenser to ensure correct purge operation.

During chiller operation air will accumulate in the coldest, calmest spot in the condenser above the liquid level. This location is typically just under half-way up the condenser shell above the condenser sump.

During Chiller OFF cycles air may rise to higher elevations within the chiller. However, with the purge operating a continuous thermal syphon exists which will draw non-condensibles into the purge tank.

In addition to the correct pick-up location the lines must be sloped a minimum of 2 inches per foot off horizontal or vertical to ensure no liquid or vapor traps exist.

Control Circuit Test

The incorporation of a microprocessor into the purge control system integrates many functions and eliminates most of the electro-mechanical control elements found in earlier purges. It is therefore difficult to test components and functions in isolation.

This procedure uses an approach of stepping through a thorough test of the entire control system, allowing evaluation of individual components and functions along the way. Problems noted at any point will indicate required service.

Refer to Figures 11 and 12 in the "Electrical System" section.

⚠ WARNING

LIQUID OR VAPOROUS REFRIGERANT
CLOSELY FOLLOW ALL SAFETY PROCEDURES DESCRIBED IN THE MATERIAL SAFETY DATA SHEET FOR THE REFRIGERANT AND TO ALL LABELS ON REFRIGERANT CONTAINERS.
Failure to follow all safety procedures for refrigerant may expose operating and/or servicing personnel to liquid and/or vaporous refrigerant. Inhalation of, or skin exposure to refrigerant can cause injury or death.

⚠ WARNING

HAZARDOUS VOLTAGE!
USE EXTREME CAUTION WHEN SERVICING UNIT WITH CIRCUITS ENERGIZED.
Failure to use caution when working on the unit with circuits energized can cause injury or death due to electrical shock.

Test procedure:

1. Record current maximum pumpout rate setting, and temporarily change maximum pumpout rate to 2 min/24 hrs.

2. Turn the chiller OFF and remove the purge power fuse located in the chiller control panel.

3. Each time purge power is removed in this test procedure, confirm that there is no power between 3TB1-1 and 3TB1-3.

4. Remove power from J16, 1-3. This will disable the external alarm relay circuit, if used.

5. For purge based display purges, disconnect and isolate the RUN signal lead that connects the chiller control panel to J26, 1-2.

6. Close the shutoff valves on the purge tank inlet and liquid return lines to isolate the purge tank from the chiller.

7. Disconnect the 1/4-inch copper line between the pumpout compressor 3B6 and isolation solenoid valve 3L3.

8. Disconnect the float switch 3S1 from P3B, 5-6.

9. Restore power to the purge and set operating mode to ON. The purge unit should not start.

10. Remove power from the purge and reconnect float switch 3S1 to P3B, 5-6.

11. Restore power to the purge. The purge unit should start.

Note: Successful completion of these steps verifies function of:
- float switch circuit
- microprocessor
- condensing unit

12. Press and hold service switch 3S2 in MOMENTARY ON position for approximately 10 seconds. Isolation solenoids 3L1 and 3L3 should energize, and pumpout compressor 3B6 should start. Air will be drawn into the purge tank through the open isolation valve 3L3 outlet.

13. Release service switch 3S2. It should return to OFF position. Isolation solenoids 3L1 and 3L3 should de-energize, and pumpout compressor 3B6 should stop.

Note: Successful completion of these steps verifies function of:
- service switch 3S2
- isolation solenoids 3L1, 3L3
- pumpout compressor 3B6

14. Repeat Steps 12 and 13 until sufficient air is drawn into the purge tank to reduce the compressor suction temperature to 18 F. At this point, the isolation solenoids 3L1 and 3L3 should energize and pumpout compressor 3B6 should start.

15. Set operating mode to STOP. Reconnect the 1/4-inch copper line between the pumpout compressor 3B6 and isolation solenoid valve 3L3 and tighten to 5-7 ft-lbf. Open the shutoff valves on the purge tank inlet and liquid return lines.

16. Set operating mode to ON. Pumpout compressor 3B6 should start. Monitor compressor suction temperature. The pumpout compressor should stop when the compressor suction temperature reaches 22 F.

Note: Successful completion of these steps verifies function of:
- microprocessor
- refrigeration compressor suction temperature sensor
- pumpout control circuit

17. Continue to monitor pumpout time. When the total pumpout time reaches 2 minutes, the unit should display a MAX PUMPOUT RATE EXCEEDED diagnostic and stop. It may be desirable to use the service switch 3S2 to hasten the accumulation of sufficient pumpout time to check this diagnostic and confirm remote fault indication relay closure at J16, 1-3.

Note: Successful completion of this step verifies function of:
- microprocessor
- remote fault relay indication

18. Restore the maximum pumpout rate setting to its original value and reset the MAX PUMPOUT RATE EXCEEDED diagnostic. Verify the remote fault indication relay has de-energized

19. For purge based display purges, complete the following steps:

a. Remove power from the purge.
b. Bring a 115 VAC power source with a momentary on switch to the RUN signal input J26, 1-2.
c. Restore power to the purge and set operating mode to AUTO. Purge should not start.
d. Press the momentary ON switch, supplying a simulated chiller RUN signal. The purge should start. Repeat several times.
e. Remove power from the purge and remove simulated RUN signal power source.

Note: Successful completion of these steps verifies function of:
- microprocessor
- run signal input

20. Remove power from the purge.

21. Enable the external alarm relay circuit, if used.

22. Check all flare connections for tightness on the 1/4-inch copper lines, between the pump-out compressor (3B6) and isolation solenoid valve 3L1. Correct tightness is 5-7 ft-lbf.

23. Restore power to the purge. Check to be sure all settings have been restored to their original values and all diagnostics generated by this test procedure have been reset.

24. For UCP2 based display purges, set the mode to AUTO and verify that the purge starts at the next chiller start. Following this verification, restore the mode to its desired value.

Note: Successful completion of these steps verifies function of:
- microprocessor
- condensing unit
- pumpout system
- float switch circuit

All test procedures are complete and the chiller is ready to be restarted and/or purged as needed.

Electrical System

Control Components

This section identifies and explains the operation of the major systems and individual components of the Purifier Purge electrical control circuit. Refer to Figures 4, 6, 11, and 12.

The following sections cover the major systems and components of the electrical system:

- Microprocessor Module
- Pumpout System
- Service Pumpout Switch
- Chiller Liquid Refrigerant Temperature
- Liquid Level Sensor
- Isolation Solenoids
- External Alarm Relay

Microprocessor Module

The Purifier Purge unit is controlled by microprocessor module 3U1. The operation of the purge is coordinated with chiller operation in both a UCP2 and purge based display system. In a UCP2 module system (as installed on new Trane chillers and older chillers which have been retrofitted with UCP2 controls), data is shared with the purge module via the interprocessor communication link (IPC). This link conveys chiller operating information to the purge and purge operational parameters to the UCP2 human interface. For purge based display installations, data transfer to the purge human interface is accomplished via the IPC link. However, chiller information is gathered via an additional binary (chiller running) and analog (purge liquid temperature) input to the purge module.

Purge operating mode is selected in the menu on the human interface (see the "Operating Mode" section for more details) -

- Purge Mode set to STOP

This mode will not allow the purge condensing unit to run. This mode is accessed by pressing the STOP key on the Purge Human interface or by selecting the STOP mode on the UCP2 human interface.

- Purge Mode set to ON

The purge will run continuously. Use of the ON switch position is recommended only for certain service procedures.

- Purge Mode set to AUTO

The AUTO mode will run the purge when the chiller is running. This mode is one of the recommended purge operating modes. The AUTO position interlocks purge operation with a chiller-generated "cooling/run" signal. For UCP2 chiller systems, this signal is transmitted as data on the IPC link. On purge based display purges, this voltage signal input is located on connection point J26.

- Purge Mode set to ADAPTIVE

This mode commands the purge to run depending on the pumpout history developed over the previous 30 days of operation. This mode is explained more fully in the section "Operating Mode"

Pumpout System

The refrigerant compressor suction temperature sensor 3RT2 is used to control the pumpout cycle to remove air from the purge tank. As air and non-condensibles accumulate in the purge tank, the refrigerant compressor suction temperature falls. When this temperature reaches 18 F a pumpout cycle is initiated by energizing solenoid 3L3 and pumpout compressor 3B6 followed by solenoid valve 3L1. The pumpout cycle is terminated when the refrigerant compressor suction temperature rises to 22° F.

Service Pumpout Switch

A service pumpout switch (3S2) is provided in the purge-mounted control panel. This switch is used to manually open the solenoid valves and energize the pumpout compressor when conducting service procedures or operational checks of the purge system. The switch is a normally open momentary rocker switch, momentarily closed to initiate pumpout.

Chiller Liquid Refrigerant Temperature

The pumpout cycle may be inhibited when the chiller condenser saturation temperature is low. The input value on UCP2 control systems is condenser liquid temperature (chiller on) or evaporator refrigerant temperature (chiller off), and is transmitted to the purge module via the IPC link. For purge based display installations, the input value is provided by a temperature sensor mounted to the bottom of the filter-drier canister and connected to purge module 3U1 at connection points J3-1 and 2. The minimum allowable condenser saturation temperature for purge pumpout may be set via the human interface. The pumpout inhibit may be enabled and disabled via the human interface.

Liquid Level Sensor

A liquid level sensor (3S1) is mounted in the top of the purge tank. This sensor will generate a latching fault if the purge tank fills with liquid. This condition can arise from purge lines that are plugged or have closed valves, or a purge suction line that contains a trap which accumulates liquid.

Isolation Solenoids

The isolation solenoid valves (Figure 4) are used to control purge exhaust from the purge tank. The operation of 3L1 and 3L3 is controlled by purge module 3U1. Two pumpout solenoid valves are provided since their function in the system is a critical factor when the purge tank is at a positive pressure.

Note: Solenoid 3L3 is not used for CFC-113 applications.

External Alarm Relay

An external alarm relay is provided for operator use. This relay is activated whenever a purge latching diagnostic occurs. This relay is located in the J16 output block of the 3U1 microprocessor. See Figures 11 and 12 in the "Purifier Purge Electrical Configurations" section.

Purifier Purge Electrical Configurations

There are two available electrical configurations for the Purifier Purge. Each is illustrated by the electrical schematics shown in Figures 12 and 13. These configurations are:

1. UCP2 based display purge (Figure 13)

2. Purge based display (field-installed) purge (Figure 13)

UCP2 based display purges are part of an integrated UCP2 control system. As part of an integrated control system, appropriate information is shared between the chiller modules and the purge module via a communication link. Purge based display or field-installed purge purges have a dedicated human interface and additional binary and analog input and output.

For purge based display purges mounted in inaccessible locations, the purge human interface may be remote mounted (Figure 4). The interface may be removed from the purge platform and placed at the chiller control panel or other convenient location.

Purge units designed for chillers using CFC-11 and HCFC-123 use two pumpout solenoid valves (3L1, 3L3). Purge units designed for chillers using CFC-113 do not have solenoid valve 3L3. See Figures 11 and 12.

Figure 12
UCP2 Based Display Purge -2306-7137B

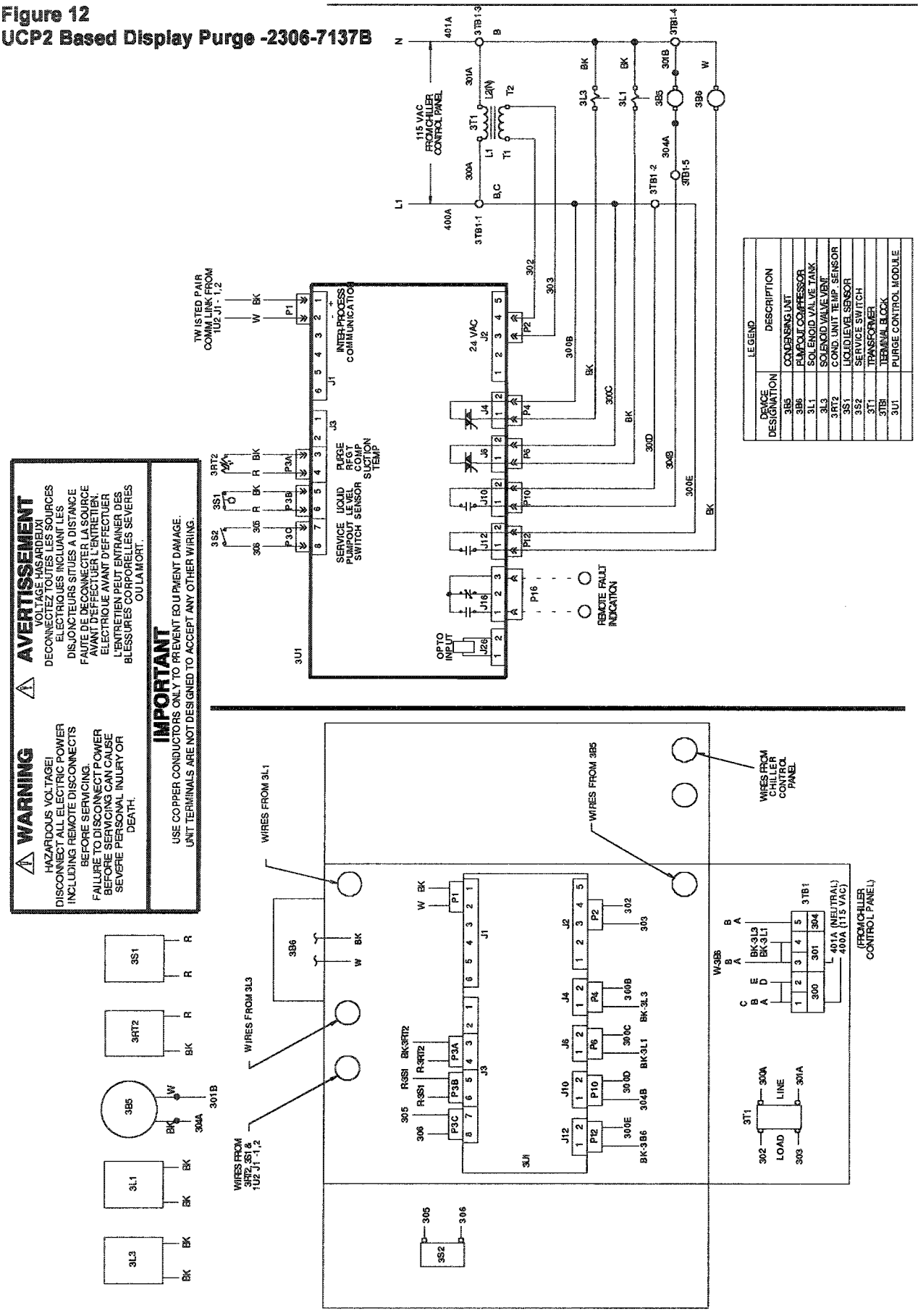

Figure 13
Purge Based Display (Field Installed) Purge

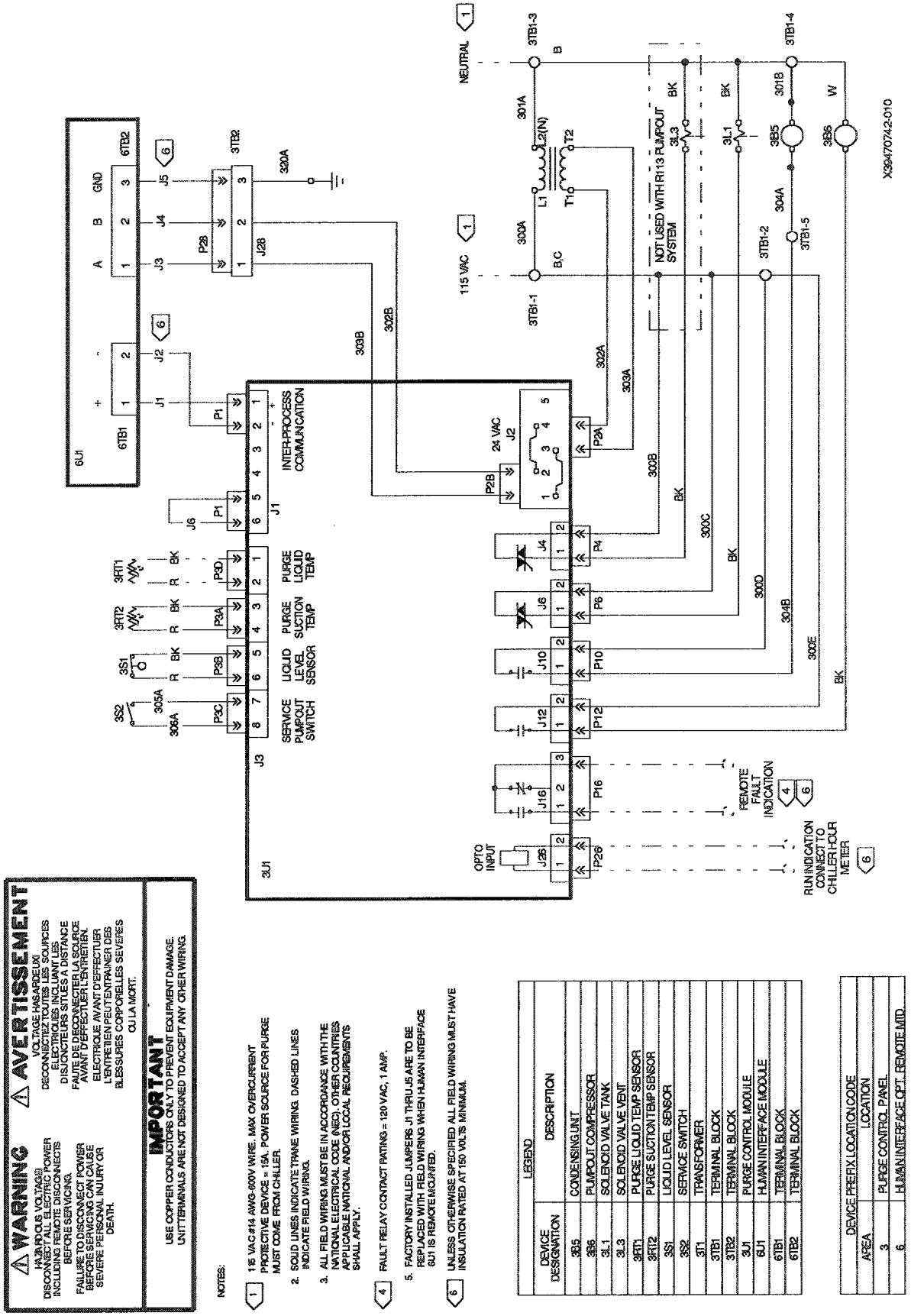

Sequence of Operation

Power is supplied to hot terminal 3TB1-1.

The microprocessor 3U1 controls purge operation according to the mode set by the operator. This control includes initiation and duration of purge operation. Input is also received from the liquid level sensor 3S1 and from a device indicating chiller condenser saturation temperature. Communication with the operator is via a human interface.

Pumpout is initiated and terminated by purge compressor suction temperature sensor 3RT2. Pumpout may be manually initiated by the momentary contact service switch 3S2.

Table 2
Sensor Temperature Vs Resistance

Temperature (°F)	Resistance (Ohms)
10	63,554
20	46,725
30	34,666
40	26,074
50	19,830
60	15,229
70	11,805
80	9,231
90	7,279
100	5,785
110	4,632
120	3,735

General Information

The Purifier Plus purge emission collection canister is installed in the exhaust line of the Trane Purifier Purge, (Figure 14). The canister contains activated carbon which "filters" the refrigerant from the purge exhaust and holds it for recovery at a later date.

The Purifier Plus requires no service other than periodic replacement. When the carbon is saturated, the canister must be removed and returned for regeneration. During regeneration the refrigerant is extracted from the carbon and recycled. The canisters are cleaned and tested to insure proper performance and made available for re-use.

Tank Replacement

The saturation level of the activated carbon in the canister is directly related to the accumulated pumpout time on the Purifier Purge. When the pumpout time on the Purifier Purge timer reaches the value listed in line "A" or the date on line "B" of the Change Purifier Plus Canister label (Figure 16), the carbon is saturated and the canister needs to be replaced.

Receiving the Replacement Kit

Upon receipt of the unit, inspect the shipping carton for signs of visible damage. Report any damage to the carrier.

Store unit in a dry, secure place prior to its installation and use.

Carefully remove the collection canister from the shipping containers. Inspect it for signs of visible shipping damage. If any damage is found, report it to the local Trane Sales Office immediately. Do not install or operate a damaged unit without sales office approval. The Purifier Plus replacement kit consists of:

- Qty 1, Regenerated Purifier Plus Canister
- Qty 1, Return shipping package and shipping instructions.

⚠ CAUTION

DO NOT CONTAMINATE THE PURIFIER PLUS CANISTER WITH THE WRONG REFRIGERANT. Before installation, verify the refrigerant type marked on the replacement Purifier Plus canister is the same as the refrigerant in the chiller.

Figure 14 - Purifier Plus Installation

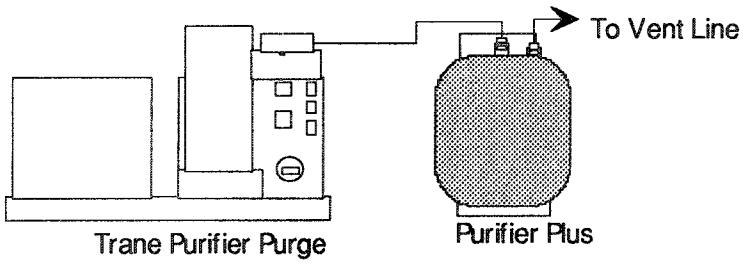

Figure 15 - Typical Nameplate

TRANE™

Order No. Example
Model No. PRPA000N2A0
Serial No. L93C02684

For use with Refrigerant
HCFC-123 only

	Purifer Purge Meter Minutes	Date
Installed	_____	_____
Removed	_____	_____

Sales Order No. _____
Purge Model _____
Chiller Manufacturer _____
Chiller Model _____

URC X39000746-011

Installing the New Canister

The refrigerant vapor in the purge exhaust line can be pumped into the canister before removing the connecting lines by:

1. Disconnect and plug the 1/4" line entering the pumpout compressor so that air cannot enter the chiller when the solenoids are activated.

2. Turn on the pumpout system using the purge service switch for ten to fifteen seconds. This will pull room air into the pumpout compressor and force purge exhaust into the Purifier Plus canister.

3. Disconnect the lines from the full canister (Figure 14 and 17).

4. If these lines are non-copper, switch the fittings between the full canister and the replacement canister. The original fittings are specially adapted to current production purge lines. Ensure that the fittings which have been moved to the full canister are tightly capped.

5. Install replacement canister and update all label information as follows:

a) Install the Change Purifier Plus Canister label (Figure 16) on the Purifier Purge over the existing label. Add the applicable value from Table 3 to the current value of purge total pumpout time. Record this number on line A. Add three years to the installation date and record on line B.

b) Record the requested information on the canister nameplate of both old and new canisters. (See Figure 15)

6. Reconnect the purge lines.

7. Reconnect the tubing removed in Step 1.

Note: The purge exhaust lines are made from a special engineering copolymer material with UV stabilizers. This material is fully compatible with R-123 and is suitable for the industrial environment associated with chiller use. The tubing is dimensioned specifically to match the special fittings used in this installation. If these lines should ever need replacement for any reason, they must be replaced with comparable material obtained from the Trane Company, or replaced with copper (this will require new fittings).

IMPORTANT NOTICE!
The contents of this canister must be reclaimed at a Trane authorized facility. Disposal of the canister or the contents in any other way may be a violation of Federal CFC/HCFC venting regulations.

Figure 16 Change Canister Label

Change Purifier Plus Canister

AT ____A____ MINUTES
OR ____B____ DATE

A = Purge Pumpout timer value at installation plus appropriate value from Table 3.
B = Installation date plus 3 years

Table 3 - Purifier Purge - Pumpout Minutes

	Chiller Refrigerant		
	R113	R11	R123
Model -- PRGA	5000	1500	2000
Model -- PRGB	5000	3000	4000
Model -- PRGC	5000	3000	4000

Figure 17 - Purifier Plus Canister and Bracket

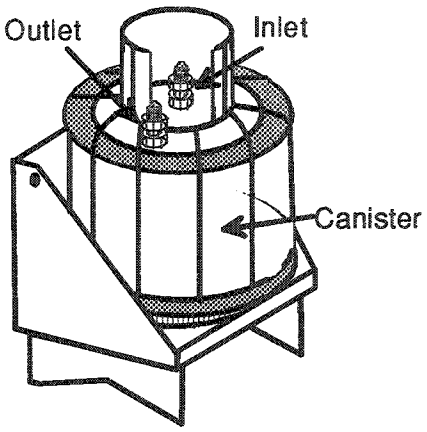

Purifier Plus (Continued)

Return Instructions

The replacement Purifier Plus shipping box should be used to ship the saturated Purifier Plus canister back to Trane for regeneration. Upon receipt of the Purifier Plus canister at the Trane regeneration site, core deposit dollars will be credited to the appropriate customer account. **TO RECEIVE CORE DEPOSIT CREDIT DOLLARS, THE SATURATED PURIFIER PLUS CANISTER MUST BE RETURNED TO TRANE FOR REGENERATION.**

Follow these instructions for easy Purifier Plus returns:

1. **Inspect it!** Upon receipt of the replacement canister, confirm the following items were received.

Qty	Description
1	Purifier Plus Canister
1	UPS Authorized Return Service Label

2. **Package it!** Remove the new canister and place the saturated Purifier Plus into the shipping carton.
3. **Seal it!** Seal the carton with heavy-duty shipping tape. Please do not use masking or cellophane tape These are not strong enough for proper seal.
4. **Label it!** Enter your address and ZIP code in the space provided on the UPS A.R.S. label and apply it on top of the existing mailing label, located on top of the carton. Do not place label over tape or seams. Retain the detachable receipt for your records. (Complete shipping instructions are included on the back of the label.)
5. **Send it!** Bring the package to any location where a UPS driver makes a regular pickup or delivery or to any UPS Customer Counter. Your A.R.S. package will be accepted free of charge. You do not need to call for pickup or record the package in a pickup record book.

Maintenance

No maintenance is required for the canister. Keep the canister clean and dry in a corrosive free environment.

⚠ CAUTION

DO NOT PAINT THE TANK. The performance of the carbon is tracked by weight. Any added weight will invalidate the tank data.

TRANE™

Purge Systems Operation

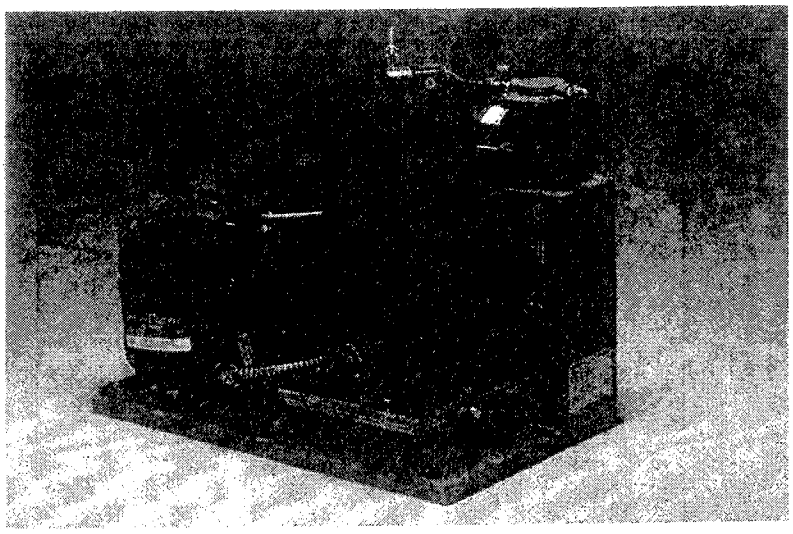

Technical Training
Student Handbook

ST-MNL-3

©American Standard Inc. 1992

CONTENTS

INTRODUCTION 4

WHY PURGE SYSTEMS ARE NEEDED 4

HOW THE PURGE ELIMINATES AIR 6

WHEN TO PURGE A UNIT 6

HOW PURGE DESIGNS HAVE CHANGED ... 8
- Belt Drive Purge 9
- Oil-Less Purge 9
- Oil-Less Purge with UCP 10
- Purifier Purge 10

HOW PURGE SYSTEMS WORK 11
- Belt-Drive Purge 11
- Oil-Less Purge 11
- Oil-Less Purge with UCP 12
- Purifier Purge™ 12

SUMMARY 17

This manual is a companion piece to the Trane seminar of the same name. To order additional copies, contact:

Service Literature Department
The Trane Company
3600 Pammel Creek Road
La Crosse, WI 54601
608-787-3684

Please specify the order number, ST-MNL-3.

The following support materials are also available through Trane Service Literature:

PRG-OM-3A Operation and Maintenance Manual for Purifier Purge
PRG-IN-1A Retrofit Installation of Purifier Purge

The Trane Company, La Crosse, Wisconsin 54601-7599

INTRODUCTION

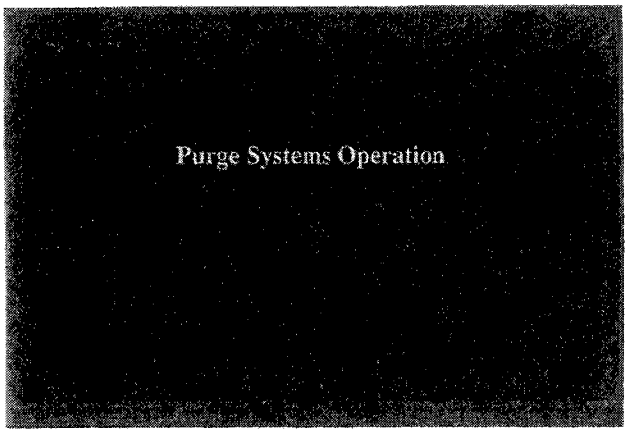

Figure 1

(Figure 1) In this section, we will introduce the operational aspects of the various purge systems utilized over the years by The Trane Company.

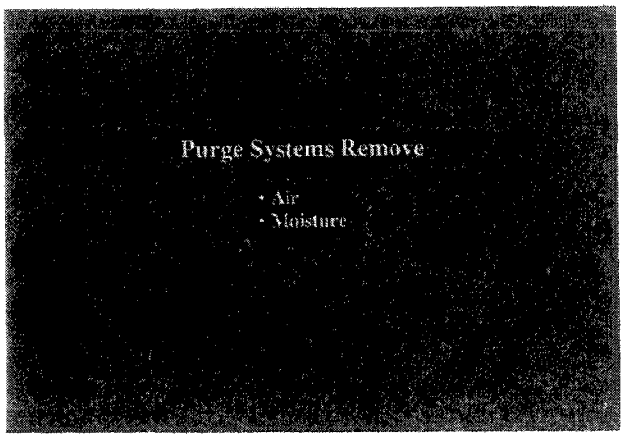

Figure 3

(Figure 3) The primary noncondensables requiring purge systems are air and moisture. While both air and moisture are collected by the purge systems, only air can be removed automatically from the system by means of some form of bleed or relief valve. Moisture or water must be removed manually through a blow-down valve system or methods using water absorbing materials.

WHY PURGE SYSTEMS ARE NEEDED

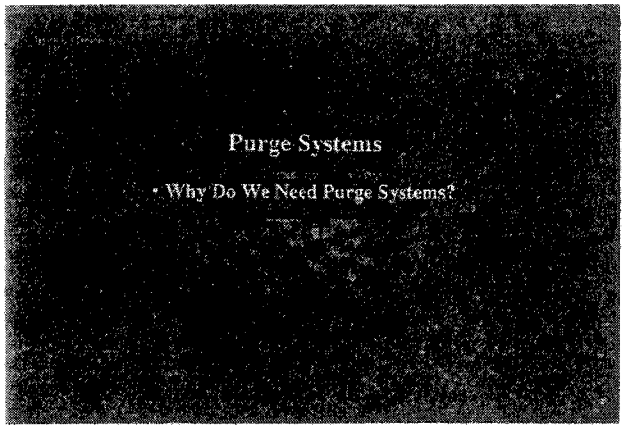

Figure 2

(Figure 2) Why do we need purge systems? Because many centrifugal chillers operate in a vacuum, there is an opportunity for contaminates to get into the system from any leaks or minor servicing errors. These contaminates are classified as noncondensables requiring a method for disposal. This is known as purging.

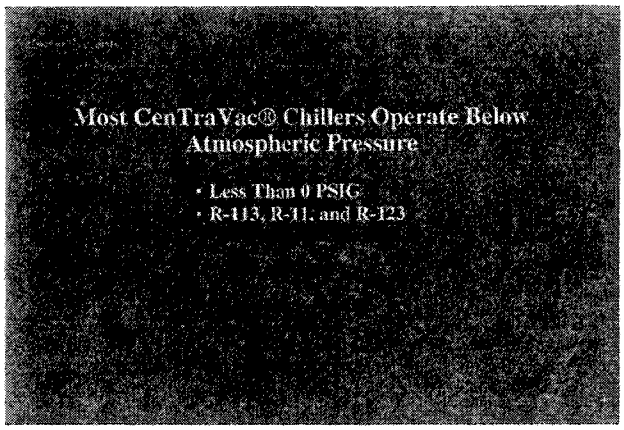

Figure 4

(Figure 4) All low pressure centrifugals operate completely or partially below atmospheric pressures. These machines use low pressure refrigerants such as R-113, R-11 or the new replacement refrigerant, R-123.

Because the system operates below atmospheric pressure, there is the possibility for refrigerant contamination by way of leaks in the system. While some people may consider purge systems to be a nuisance, they actually play an important part in maintaining centrifugal chiller system integrity.

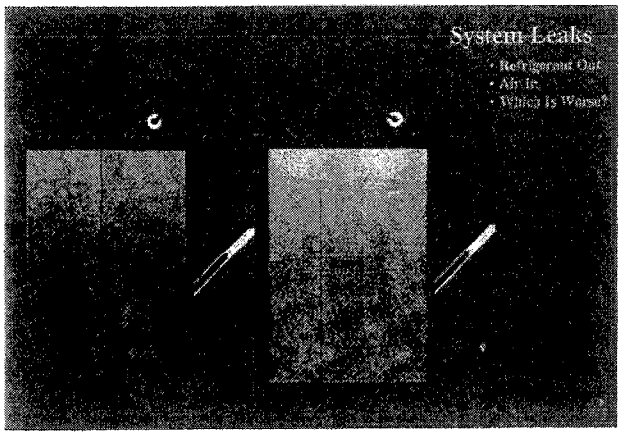

Figure 5

(Figure 5) This figure illustrates the difference between a low pressure and a high pressure system. It also may help you to understand why a purge system is used only on low pressure systems.

In the example on the left, an operating high pressure system is represented using Refrigerant-12. The high and low operating range for this refrigerant is indicated as positive pressures (PSI above atmospheric pressure). The example on the right with Refrigerant-11 is operating in a negative or partial vacuum measured in inches of mercury.

If a leak were to occur with either of these systems, what would be the result? The high pressure refrigerant machine would probably lose all of its charge if the leak were not discovered in time. A leak of this type is hazardous to personnel and may result in injury. The low pressure machine would simply leak air into the machine.

By simply monitoring the frequency of the purge relieving noncondensable gases, the operator could spot the increasing leak rate in the low pressure machine. The actual loss of refrigerant, then, depends only on the efficiency of the purge in separating air from refrigerant in the purge process.

Since there is increased interest in reducing atmospheric emissions of all refrigerants to an absolute minimum, the importance of an efficient leak prevention program will become paramount for all chiller systems, regardless of the type of refrigerant being used.

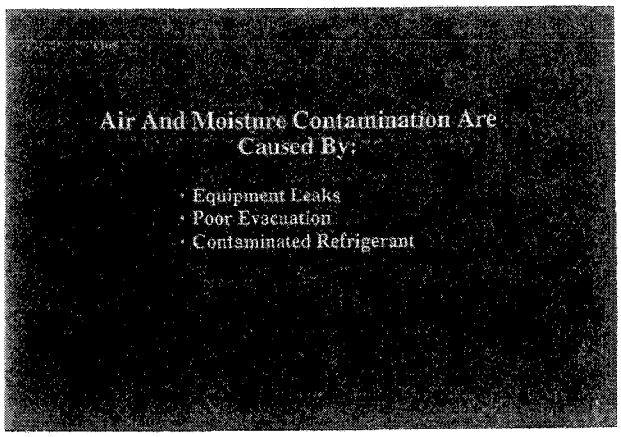

Figure 6

(Figure 6) Generally, we can isolate air and moisture contamination to three areas: equipment leaks, poor service evacuation practices and contaminated refrigerants. All of these conditions can be improved by increased attention to the fundamentals of machine operation and maintenance, and a strong educational program.

Improper or limited evacuation by service personnel is usually the result of haste in completing the job of restarting a machine after servicing. The service technician may opt for inadequate evacuation in the interest of time and the mistaken belief that the purge can handle all the air and moisture remaining in the chiller following major work.

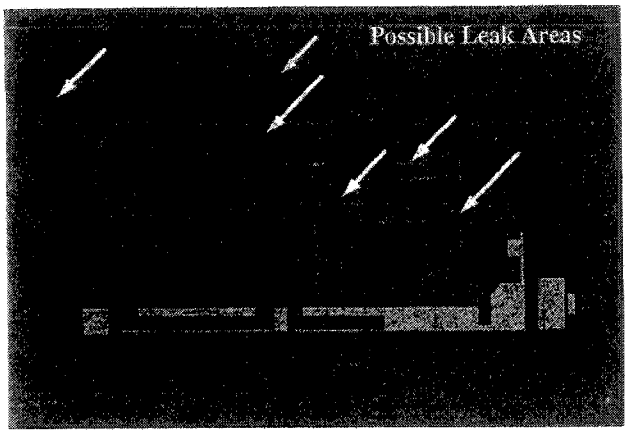

Figure 7

(Figure 7) Leaks can adversely affect the operating capacities and efficiencies of any air conditioning or refrigeration equipment. In large centrifugal chillers such as the Trane CenTraVac® chiller, the low pressure areas are most suspect when purge operation rates increase, indicating an increase of noncondensable gas being relieved.

Leaks are most likely to occur around the low pressure flanged or gasketed areas, tube and pipe fitting areas, and wherever control linkages must connect to the compressor inlet guide vanes.

High pressure leaks are also possible past the compressor's first stage in the flange areas and at pressure taps. These leaks will occur when the chiller is running and will not be detected with the increased purging rate. It is useful, therefore, to monitor the machine room air for traces of refrigerant gas and periodically leak check these areas simply to minimize these types of refrigerant losses.

HOW THE PURGE ELIMINATES AIR

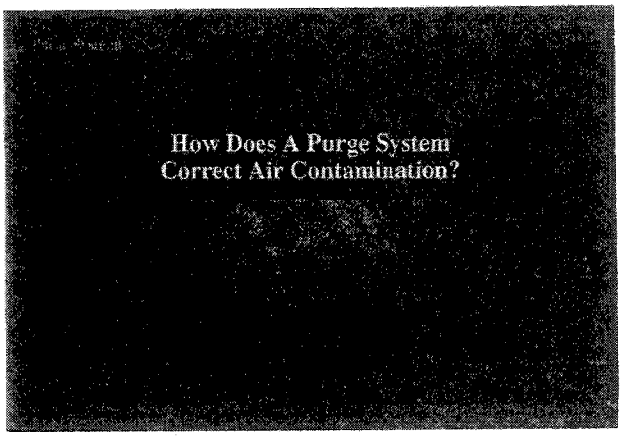

Figure 8

(Figure 8) How the purge eliminates air from the chiller is the subject of the next area of discussion.

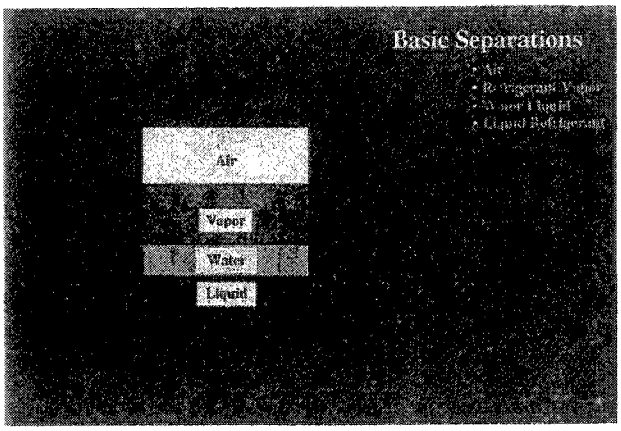

Figure 9

(Figure 9) The first step to understand a purge system is to know how the noncondensables and refrigerant separate in a closed container. The container in Figure 9 shows the separation or stratification process of liquids and gases based on their different weights.

Since air is the lightest of the components shown here, it will always rise to the top. Next in sequence is refrigerant vapor, water and finally refrigerant liquid. Because air is lightest, and is at the top of the container, it is a simple process to slowly release that air by means of a relief valve (provided that the container gases are not stirred or mixed in any way).

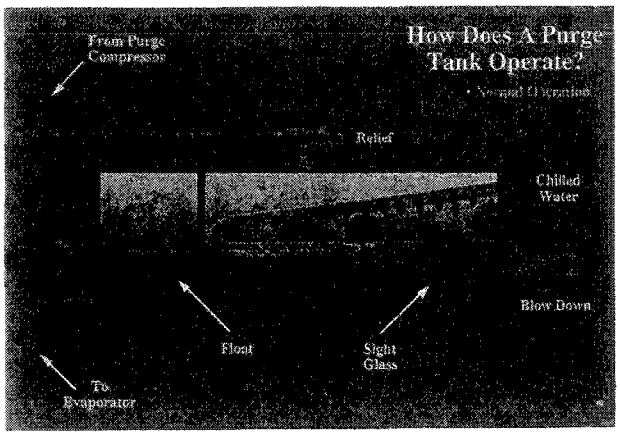

Figure 10

(Figure 10) Using the basic separation process just covered, let's look at a typical purge condenser tank that is found on many chillers manufactured from the 1950's through the 1980's. First we will assume that noncondensables are not present.

Refrigerant vapor comes from the chiller's condenser via a purge compressor and is directed to the purge condenser tank. The higher pressure gas comes into contact with a coil which acts as a condenser. Using cool water flowing in the coil, the purge condenser transforms the refrigerant gas to a liquid and it drops to the bottom of the tank.

A liquid level is maintained by a float-valve which meters the liquid back to the chiller's evaporator. Since noncondensables did not enter the purge condenser tank with the refrigerant vapor, the pressure of the refrigerant in the purge tank will stay fairly close to the saturation temperature imposed by the cooling water in the coil.

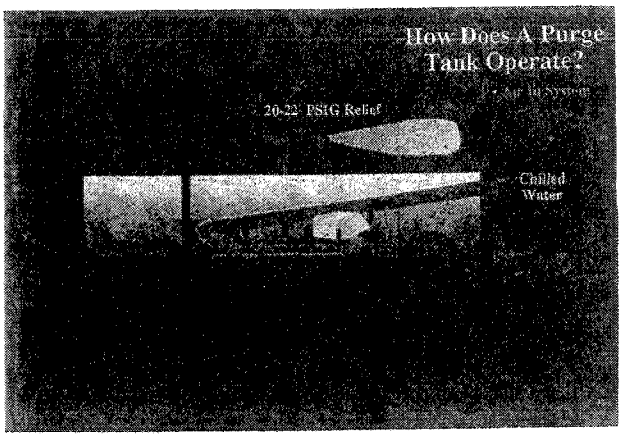

Figure 11

(Figure 11) This figure shows a system contaminated with air. The contaminated refrigerant and air mix is drawn from the unit condenser via the purge compressor and again is directed to the purge condenser tank. The gas mixture comes into contact with the purge condenser coil. With the mixture of gases, only the refrigerant portion will condense to a liquid.

The remaining air becomes trapped within the purge condenser tank and will accumulate. Because pressures of dissimilar gases have an additive effect, the combined gas pressures reach the release pressure of the relief valve located on top of the purge drum, and the valve vents the air mixture.

Because refrigerant vapor is present in the purge condenser tank when the relief valve is activated, some refrigerant can be lost with the air being vented. The efficiency of this method of purge depends, in part, on the condensing temperature in the purge drum. The temperature should be as low as possible to lower the distillation temperature of the refrigerant-air mixture. This will minimize the percentage of refrigerant vapor volume relative to the air volume in the drum while gases are being vented.

WHEN TO PURGE A UNIT

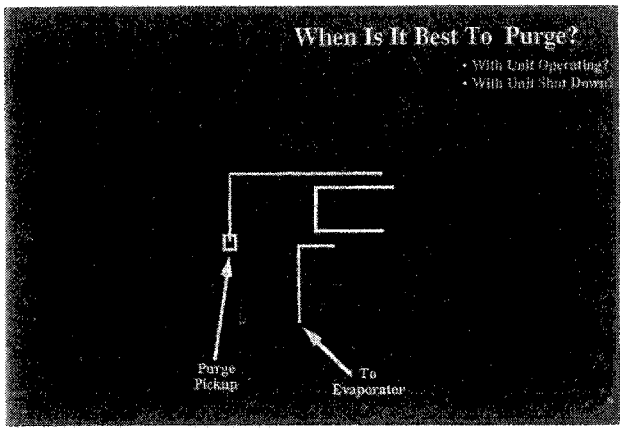

Figure 12

(Figure 12) Is it best to purge when the unit is operating or when the unit is shut down? It depends on where the purge pickup is located on the machine. Referring to Figure 12, note that the pickup is about halfway down the condenser tube bundle. With this form of pickup, an operating machine is more effectively purged than a machine that is standing idle.

With the compressor forcing high velocity discharge gas into the top of the condenser shell, air will be mixed with the refrigerant. A quiet zone is provided at the side of the condenser shell to help trap and hold air to be picked up by the purge compressor. With the unit off, there is a stratification of air to the top of the condenser. The pickup becomes less effective because less air is actually exposed to the pickup point.

Why is the pickup always located in the condenser and not in the evaporator? Air will always tend to be trapped in the condenser. With the unit running, the condenser has a liquid seal at the condenser discharge; air cannot travel past this point. With the chiller off, air in the machine will rise to the top of the condenser. Either way, the evaporator is not an effective source for the point of purge pickup.

HOW PURGE DESIGNS HAVE CHANGED

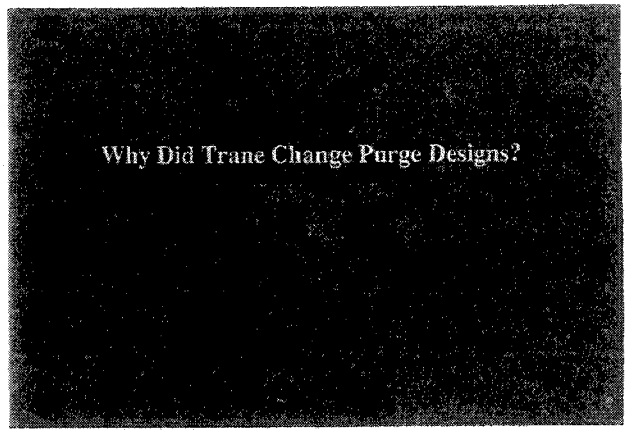

Figure 13

(Figure 13) Trane and other manufacturers of low pressure centrifugal chillers have all changed their design of purge units over time. In the centrifugal chillers of the 1930's, purging was often done by releasing the air-mixed refrigerant directly from the top of the condenser barrel.

The main factors for design changes of the mechanical purge systems were: reducing product costs to be more competitive; extremely low refrigerant costs, which lowered the priority concerns about refrigerant losses; and owner requirements for reducing maintenance time and labor on the purge systems.

These were the priorities before the current concern of reducing refrigerant emissions to the lowest possible levels due to environmental concerns. The design requirements for purge effectiveness have changed!

BELT DRIVE PURGE

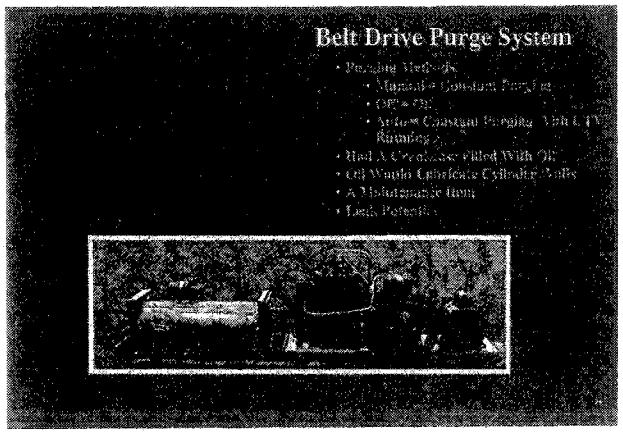

Figure 14

(Figure 14) The belt drive purge was the earliest purge design Trane used. One of the main reasons for using this purge system for so many years was that its endurance record was well proven. It had an open drive type compressor supplied to Trane from several vendors. Other components were the oil separator, purge condenser tank and a fractional horsepower motor which drove the compressor with a belt drive system.

The operation of this type of purge system can be controlled by the operator through the use of a three-position rocker switch. In the **MANUAL** position, the purge unit will run continuously with no respect to the operating mode of the chiller. Occasionally running the purge in the manual position was the preferred method of purging the chiller by many operators because it allowed them to monitor the relief of noncondensables.

In the **OFF** position, the purge unit is totally disabled. In the **AUTO** position, the purge unit would operate continuously when the chiller was on line and running. When the chiller shut down, the purge system would be stopped.

This purge design required careful operation and maintenance to keep the system running effectively. The oil separator, purge drum, float mechanisms, relief valve and purge tank all required cleaning and periodic service. The external components such as the motor and belt drive also had to be maintained. As with all open drive compressors, the seals often were subject to leaks and had to be inspected and serviced.

OIL-LESS PURGE

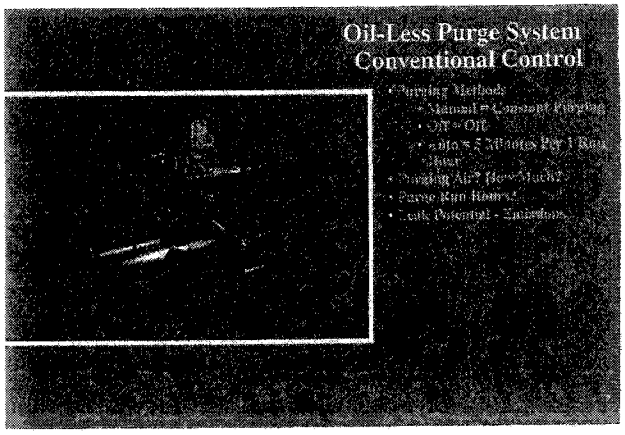

Figure 15

(Figure 15) Shortly after the introduction of the Trane three- stage CenTraVac chiller, the oil-less purge system was introduced. The main feature of this system was that the purge compressor did not utilize an oil-filled crankcase, and because of this, it did not require a oil separator to recover oil. An advantage to this approach was lower maintenance.

However, this design did have a number of drawbacks. For example, continuous purging operations of long duration caused premature wearing of the purge compressor. The oil-less purge system again used a three-position rocker switch to control the purging of the chiller.

In the **MANUAL** position, the purge system would run continuously with no respect to the chiller's operation. In the manual position, it was imperative that chilled water be flowing through the purge condenser. This again was the preferred method of purging by many operators.

In the **OFF** position, the purge system was totally disabled.

In the **AUTO** position, the purge unit would operate for five minutes of each hour that the chiller is operating. This five minutes of purging was sufficient to remove noncondensables; however, the actual amount of noncondensables removed could not be determined in this mode of operation.

This oil-less purge unit, as well as preceding purge units, had no way of maintaining a record of the duration of operations or the number of purges. Without this information, it was difficult to determine both the condition of the system as well as the purge compressor overhaul needs.

OIL-LESS PURGE WITH UCP

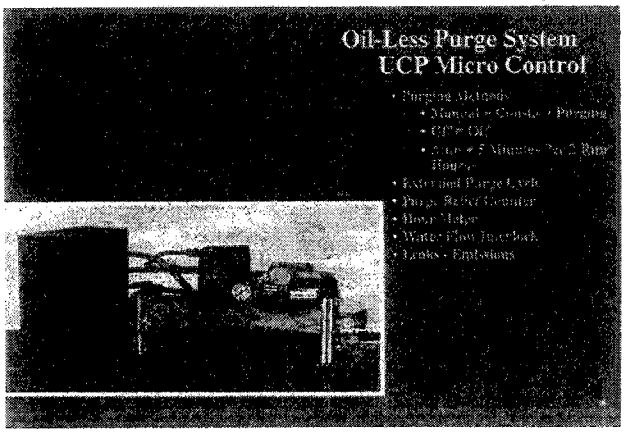

Figure 16

(Figure 16) The next step was to interface the oil-less purge system with the new Trane three-stage CenTraVac unit control panel (UCP). This allowed for better control of the system.

The unit control panel (UCP) oil-less purge system again used a three-position rocker switch to control its operation. In the **MANUAL** position, the purge system operated continuously, regardless of the operating mode of the chiller.

In the **OFF** position, the purge system was totally disabled.

In the **AUTO** position, the purge operated five minutes out of each two hours of chiller operation (assuming that no significant purge gases were present).

Although the basic oil-less purge system was the same, the method of control and recording capabilities were enhanced. This enhancement included the addition of a start counter to count the number of actual purge relief operations and an hour meter that would record the run hours accumulated on the purge compressor.

Another feature was the extended purge cycle, a slightly more flexible approach to purge. This feature increased purging time by an additional four minutes each time a call for relief was required. This increased the ability of the purge system to completely free its system of air and minimize the number of run hours accumulating on the purge compressor and extend the time between purge compressor overhauls.

This unit also had a small purge tank and a solenoid valve controlled by the control panel instead of a relief valve.

PURIFIER PURGE

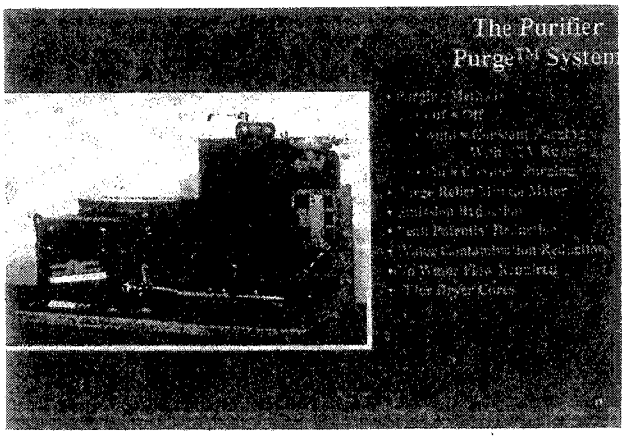

Figure 17

(Figure 17) In 1990, the Purifier Purge™ system was introduced. This style of purge also uses intelligent controls. In addition, it exhibits a whole new concept in purging methods. The net results are more accurate and informative purging.

The features are numerous, the first being that the new system purges by monitoring a refrigerant temperature instead of pressure. It does not need water connections for condensing purposes; therefore the purge system can be operated easily without the chiller running, and there is little chance of water contamination or accidental discharge of the refrigerant.

This system dramatically reduces the amount of refrigerant emissions by about 90 percent. The purifier release of air to refrigerant ratio has been measured at .5 to 1 pound of refrigerant for each pound of air purged from the system. This compares to a ratio of three to seven pounds of refrigerant to each pound of air in the old system.

There are similarities and differences in the operation of this system. For example, when the three-position rocker switch is in the **OFF** position, the purge system is totally disabled, as with previous systems.

When the switch is in the **AUTO** position, the purge system will operate continuously with the chiller in a run mode. When the chiller shuts down, so does the purge system.

When the switch is in the **ON** position, constant sampling is the result, regardless of the chiller's operating mode and discharge noncondensables when needed. It also records minutes of relief operations.

HOW PURGE SYSTEMS WORK

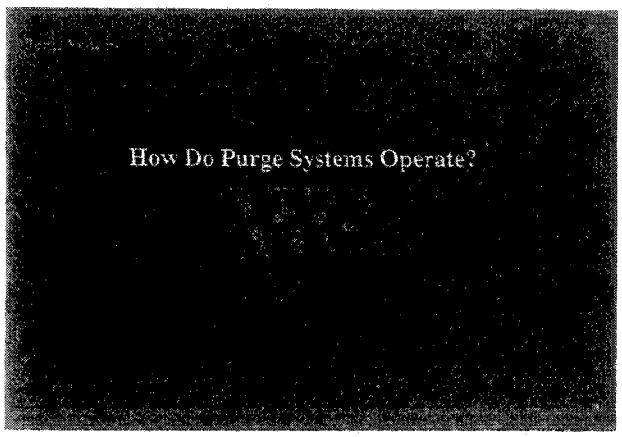

Figure 18

(Figure 18) Now let's take a look at how these four purge systems work.

BELT DRIVE PURGE

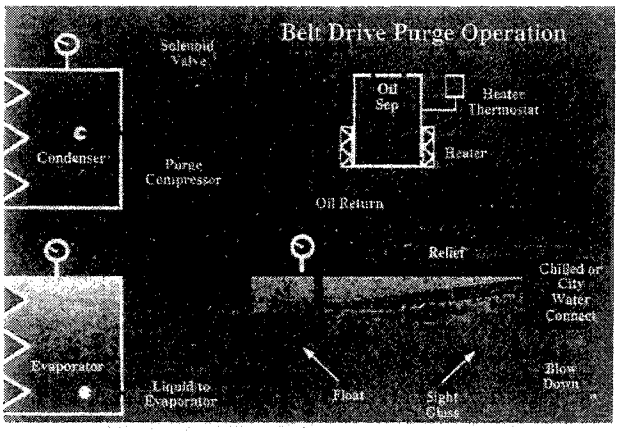

Figure 19

(Figure 19) The belt drive purge system took refrigerant samples from the unit condenser via a solenoid valve that had been energized to allow that sample to be compressed by the purge compressor and sent to the oil separator.

Notice that the purge gas mix must be elevated to a higher pressure in order to develop sufficient pressure for this design of purge system to work.

The oil separator is needed because the purge compressor has a crankcase filled with oil. The oil coming off the crankshaft lubricates the cylinder wall. As the piston comes down on an intake stroke of the compressor, some of the oil lubricating the cylinder wall slips past the piston rings.

The oil will leave the compressor by way of the discharge line on the compression stroke. This oil must be recovered and returned to the crankcase of the purge compressor by an oil separator. The oil separator must be kept warm through the use of heaters to insure the flashing of any refrigerant entrained with the oil.

The higher temperature and pressure refrigerant vapor is then sent to the purge tank, where it's condensed to a liquid. The liquid refrigerant is then returned to the evaporator to do useful work.

OIL-LESS PURGE

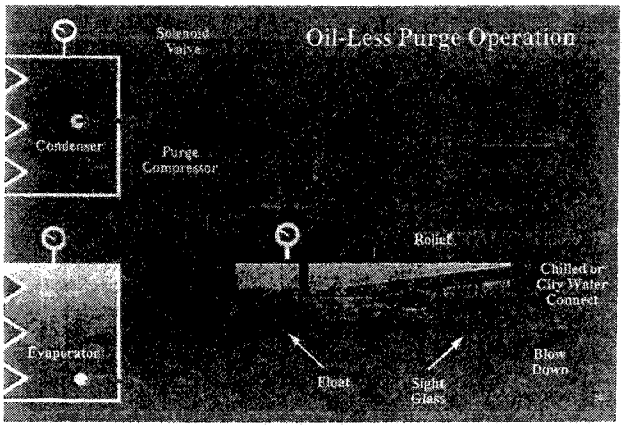

Figure 20

(Figure 20) The oil-less purge operation is very similar to the belt drive purge with one evident exception and that is no requirement for an oil separator. All other purge functions are the same.

It's interesting to note that this compressor was originally designed to operate as an air compressor, but was redesigned to operate in a refrigerant atmosphere. Even though air compressor and refrigerant parts are interchangeable, parts designed for use in refrigerant atmosphere only should be used because of the difference in the life expectancy of the parts.

OIL-LESS PURGE WITH UCP

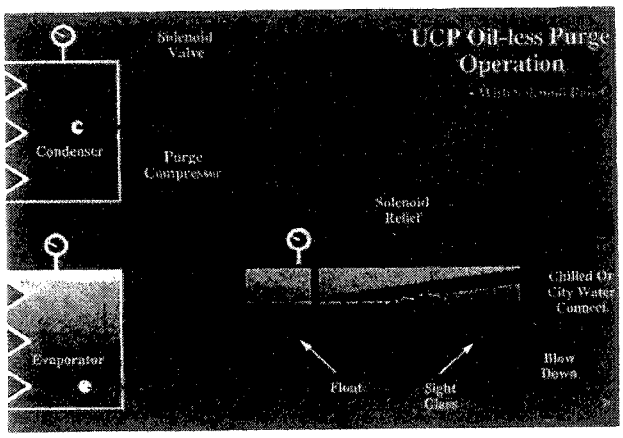

Figure 21

(Figure 21) The unit control panel controlled oil-less purge is the same as the earlier oil-less purge, except that the newer purge system operates on command signals from a higher source and as stated before, offers relief by way of a solenoid valve instead of the standard relief valve.

PURIFIER PURGE™

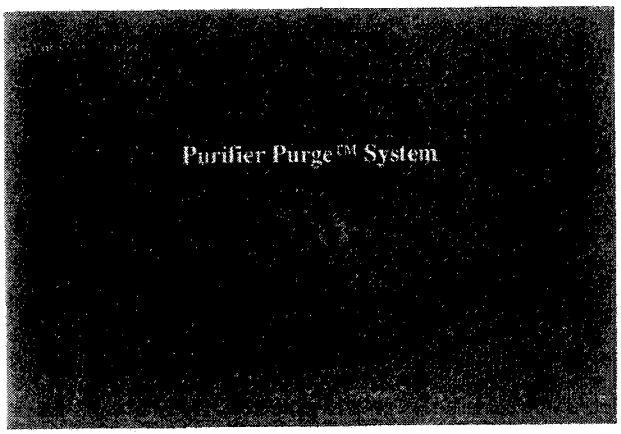

Figure 22

(Figure 22) The Purifier Purge is a new and exciting concept. Its basic purpose is the same as that of all purge systems, but it performs in an entirely different manner.

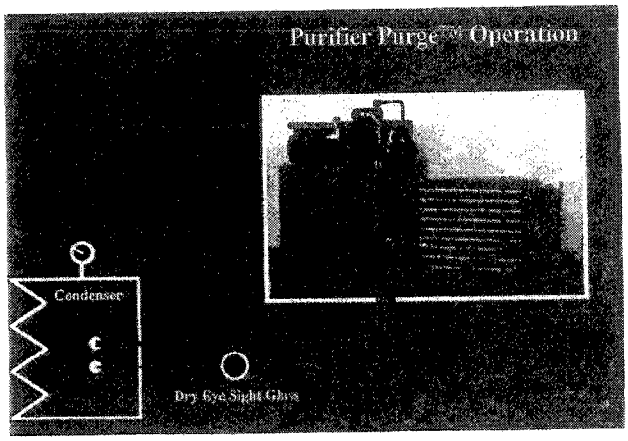

Figure 23

(Figure 23) The initial big change we see is that the purge pickup and purge liquid return are both located in the unit condenser. This system has some advantages in that flow is established through migration of the refrigerant sample from the unit condenser and returns by gravity flow. So, the Purifier Purge™ system must be installed on the top of the condenser. The return flow and moisture content of the refrigerant is monitored by a Dry-Eye™ sight-glass.

This sample process is an improvement because it does not rely on elevated pressure for condensing or refrigerant return. It also reduces the possibility of leaks because fewer components and connections are used, and the refrigerant sample is being taken from and returned to the same vessel.

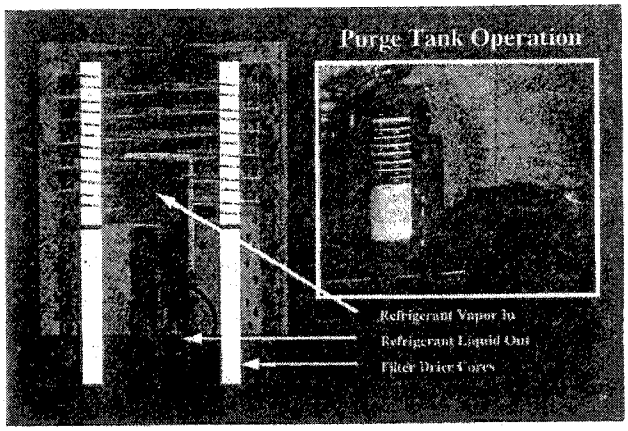

Figure 24

(Figure 24) The refrigerant vapor sample is brought into the bottom of the purge condenser. In the purge condenser there is a vapor inlet and a liquid refrigerant return tube. There also are two filter drier cores installed end to end, the purpose of which is to remove any moisture that may be entrained with the refrigerant sample.

The refrigerant vapor sample, having passed through the filter drier cores, will next encounter a serpentine coil, which acts as a heat exchanger. The serpentine coil cools the refrigerant vapor and causes it to condense to a liquid and allows it to collect in the bottom of the purge tank.

The liquid level rises in the bottom of the tank until it exceeds the height of the liquid refrigerant return tube and then returns the liquid to the unit condenser.

Any water present in the tank is prevented from returning to the unit condenser by a water separation tube that extends below the liquid level isolating the lighter water above the refrigerant, where it will be visible through the sight glass in the purge tank. This visible water line will serve as a cue that service is required and the filter drier cores should be replaced.

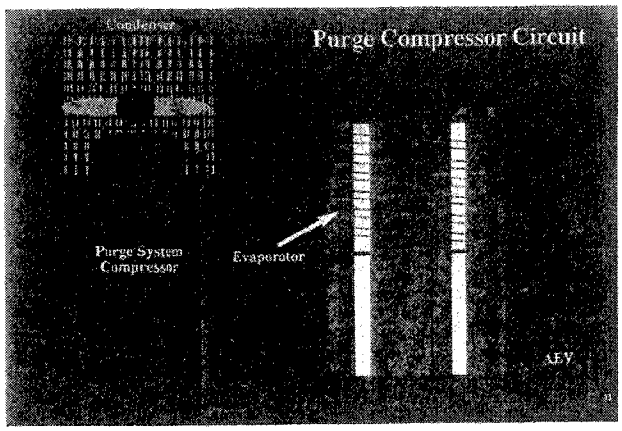

Figure 25

(Figure 25) In order for the purge condenser serpentine coil to act as a heat exchanger, a small refrigeration circuit is used. This refrigeration circuit is much like the one in a home refrigerator.

Its purpose is to supply low temperature refrigerant, approximately 0 F, to the coil by way of an automatic expansion valve. The serpentine coil heat exchanger removes the heat from the refrigerant sample. The low temperature refrigerant supplied by the refrigeration unit now completes its circuit and returns at a higher temperature, sometimes as high as the chiller condensing temperature.

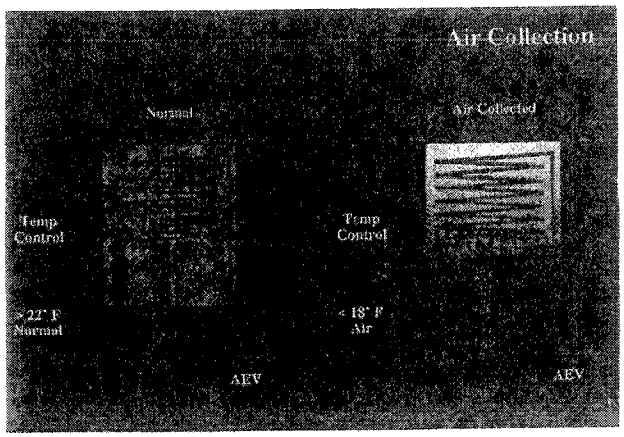

Figure 26

(Figure 26) What happens when air collects in the purge condenser tank? The diagram on the left shows a normal operating purge condenser. We know it's operating because the temperature control is monitoring a return refrigerant temperature of 22 F or greater.

But the diagram on the right is a different story. As more air collects at the top of the tank, the air will begin to insulate the serpentine coil, preventing it from doing its job.

As the volume of air increases in the tank, more and more of the serpentine coil surfaces become inefficient in absorbing heat. The temperature control monitors this condition and senses air is trapped in the purge tank because of the lower return refrigerant temperature.

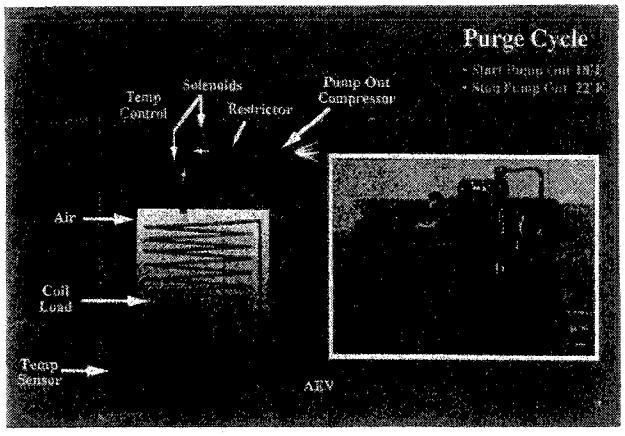

Figure 27

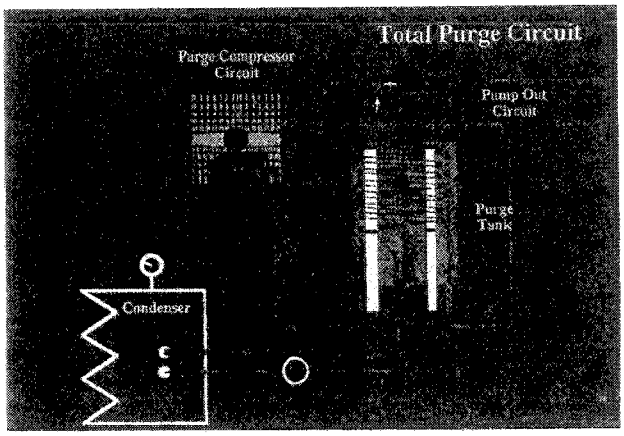

Figure 28

(Figure 27) Once the temperature control has sensed 18 F or below, indicating the presence of air in the purge tank, it will initiate and energize the purge solenoids and the pump out compressor to remove the air. The temperature control will continue monitoring the returning refrigerant temperature from the serpentine coil and when it sees the temperature rise above 22 F, it will discontinue the purge relief cycle.

It should be noted that there is a restricter located between the solenoid valves and the pump out compressor. This restricter's purpose is to slow down the discharge rate of the pump out compressor to prevent excessive release of refrigerant vapor with the trapped air. The slower release of air reduces turbulence inside the tank from the entering vapor.

Also notice that there are two opposing solenoids installed in the pump out line. These solenoids provide a positive seal when they are de-energized to minimize leak potential.

(Figure 28). As discussed, three circuits are involved in the purge system. The refrigeration circuit supplies the low temperature refrigerant for condensing purposes to the purge serpentine coil. The purge pickup and return circuit to the unit condenser supplies the refrigerant sample for testing purposes. The solenoid valves and the pump out compressor reject air from the system.

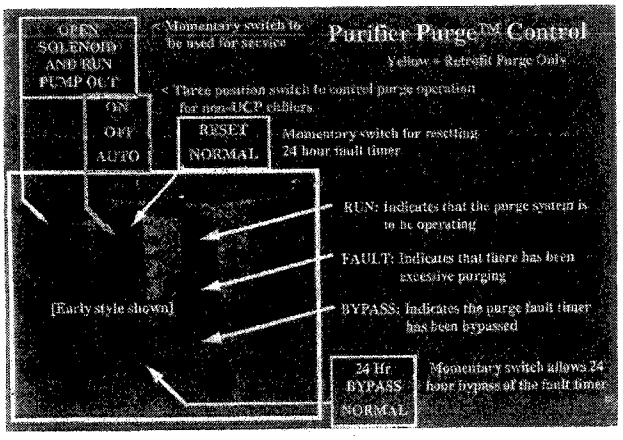

Figure 29

(Figure 29) There are several control schemes involved in the Purifier Purge control system. One of the control schemes relates only to a version which operates only by its own controls for use with older chillers.

Another scheme involves the interfacing of the chiller's microprocessor panel with the purge control system, allowing for a centralized control point. To get an explanation of the full sequence of operation, refer to the applicable operators manual. Be sure to use the correct manual.

This figure shows indicator lights and operational switches. The open solenoid and run pump out switch acts as a momentary service switch. This switch is meant to be used by service personnel to test for operation of the purge solenoid valves and the pump out compressor.

The **ON, OFF/RESET, AUTO** switch is used only with field retrofit of the newest version of the purifier purge system. The purpose of this switch is to reinitialize the internal purifier purge 24-hour smart timer.

There are three indicator lights mounted on the purge control panel:

Run: This light indicates that the purge system is operating. It should be noted that the purifier purge runs continuously as long as the chiller is operating.

Fault: This light will illuminate any time that the actual purge relief has exceeded the time value set in the 24-hour smart timer (factory set at 12 minutes).

Bypass: This light is illuminated when the purge relief 24-hour fault timer has been bypassed intentionally. One reason for this intentional bypass may be because of a service requirement.

The final switch, 24-hour bypass or normal, is a momentary switch and is used to reinitialize the 24-hour bypass fault timer for an additional 24 hours.

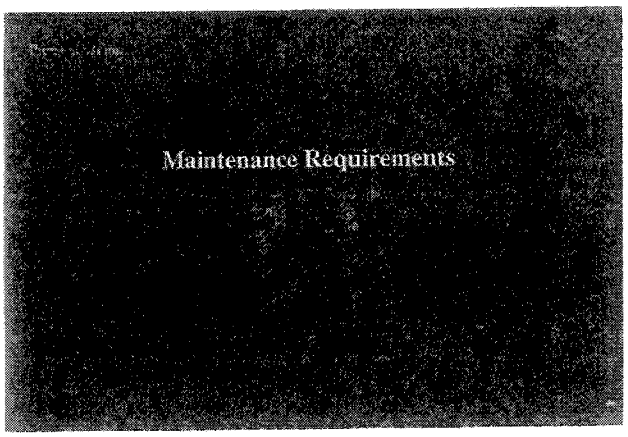

Figure 30

(Figure 30) To get the maximum performance out of any purge system, certain maintenance requirements must be met. In the remainder of this manual, we will cover these necessary steps.

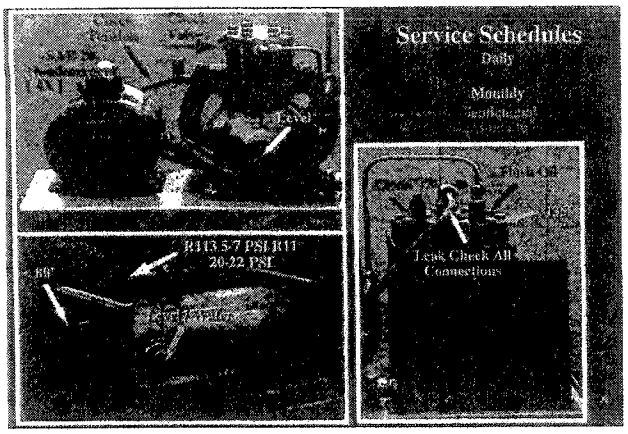

Figure 31

(Figure 31) Performing regular, scheduled maintenance will help assure proper operation of the purge belt drive system. Here are suggested service schedules:

Daily: Check and log operating purge pressures. If the purge compressor has a sightglass, check for oil levels. Check the purge drum for proper level and any indication of moisture. Check the oil separator for proper operating temperature.

Weekly: Operate the purge as required. Check the oil separator heaters for proper setpoints and operating temperature.

Monthly: Leak check all purge components, lines, connections and fittings. Check the purge drum water temperature. (It should be less than 80 F). Check the purge compressor oil level.

Quarterly: Lubricate purge motor bearings.

Semiannually: Check the purge belt drive for wear and proper tension. Clean all water strainers. Flush the oil separator with fresh oil.

Annually: Check the purge relief for the correct relief setting. Inspect, clean and recalibrate (if necessary) all safety and operating controls associated with the operation of the purge system.

Overhaul the purge condenser tank, disassemble, clean the tank, check the float and purge tank baffle. Change the purge compressor crankcase oil. Check the purge compressor valves. Check purge compressor shaft seals. Clean the oil separator and recharge with fresh oil. Leak check all purge system components, lines, connections and fittings.

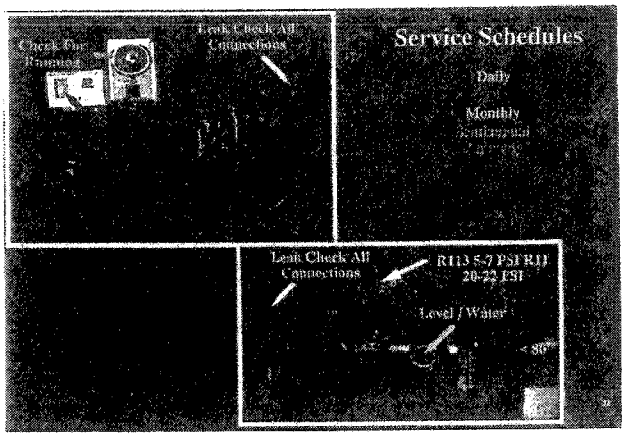

Figure 32

(Figure 32) The oil-less purge system maintenance checks are basically the same, except those items referring to the oil separator. The current recommendation is to overhaul the oil-less purge compressor at 750 hours of accumulated run time. Use only replacement parts which are suitable for operations in a refrigerant atmosphere.

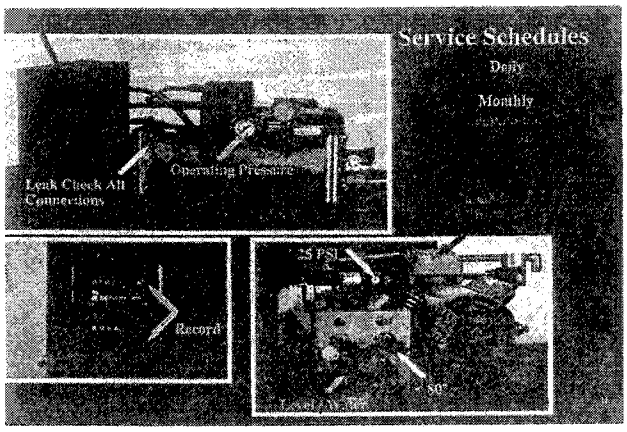

Figure 33

(Figure 33) The service requirements are basically the same for an oil-less purge system which uses unit control panel inputs. In addition, it is necessary to monitor the start counter and the run hour meter daily logs. Doing this will reveal any adverse operating conditions.

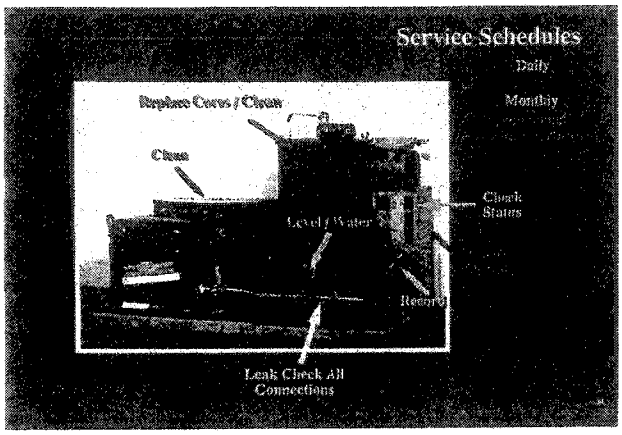

Figure 34

(Figure 34) The Purifier Purge™ has similar checkout requirements for maintenance, although there are some differences we should discuss.

Daily: Check and log the status lights of the purge control panel. Record the minute meter and note any changes in the accumulated time recorded.

If the accumulated minutes setting has changed, be sure to take into consideration the operating schedule of the chiller. Make a visual inspection of the purge tank and liquid line sight glass and note any changes.

Weekly: While the purge is operating, check the purge tank condensing activity at the sight glass. A continuous flow of refrigerant droplets should be visible.

Check the moisture indicator on the liquid return line. If the indicator shows the presence of moisture, it is time to replace the filter drier cores.

Check the purge tank sight glass for the presence of water. If water is present, there will be a visible line of separation between the water and the refrigerant.

The presence of water in the purge tank indicates that service is required. See the appropriate operators manual for a description of the above mentioned conditions.

Monthly/Semiannually: Inspect the air-cooled condenser coil and clean as needed. A fouled coil will reduce purge efficiency and capacity.

Annually: Perform a purge system control check as outlined in the operators manual. Perform purge tank service as described in the operators manual.

SUMMARY

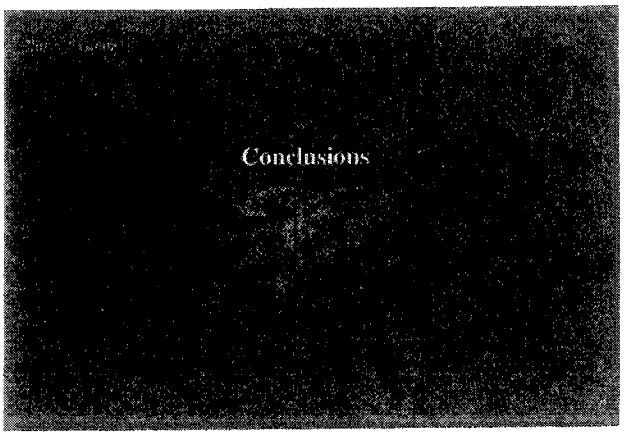

Figure 35

(Figure 35) To summarize, there are different types of purge systems. The new Purifier Purge™ system represents an opportunity for increased control over refrigeration emissions.

The Trane Company
Commercial Systems Group
3600 Pammel Creek Road
La Crosse, WI 54601-7599

An American-Standard Company

Since The Trane Company has a policy of continuous product improvement, it reserves the right to change design and specifications without notice.

Library	**E/AV**
Product Section	**ST**
Product	**CTV**
Model	**PRG**
Literature Type	**MNL**
Sequence	**3**
Date	**3/92**
File No.	**EAV-ST-CTV-PRG-MNL-3-392**
Supersedes	**New**
Ordering No.	**ST-MNL-3**

TRANE

General Service Bulletin

PRGA-SB-1

Library	Service Literature
Product Section	Refrigeration
Product	Centrifugal Liquid Chillers, Water-Cooled
Model	PRGA
Literature Type	General Service Bulletin
Sequence	1
Date	June 28,1991
File No.	SV-RF-CTV-PRGA-PRGA-SB-1-691
Supersedes	

Literature Changes:
PRGA-SB-1 (6/28/91) - Original issue of bulletin.

Subject: Model PRGA Purifier Purge™ Filter-Drier Core and Smart Timer

Introduction:

The following problems with the PRGA Purifier Purge unit have been identified.

I. - **Filter-Drier Core Movement**
II. - **Filter-Drier Core Disintegration**
III. - **24-Hour Fault Timer Setting**
IV. - **Smart Timer Fault Bypass Premature Reset**

I. Drier Core Vibration Failures:

Discussion:

A number of purge units in the field have been identified as having a problem with excessive wear occuring on the outside surface of the drier core. Evidently, normal unit operating vibration is causing the drier cores to rotate during system operation. This rotation causes the drier cores to rub against the purge coil, damaging the drier cores. Residual material from the drier core either collects at the bottom of purge tank, enters the liquid return line, or floats on the surface of the liquid refrigerant in the bottom of the purge tank.

Since the Trane Company has a policy of continuous product improvement, it reserves the right to change specifications and design without notice. The installation and servicing of the equipment referred to in this booklet should be done by qualified, experienced technicians.

Units Affected:

All Purifier Purge units that were manufactured prior to January 9, 1991 are affected by drier core movement. This includes purges that are factory-mounted on CVHB and CVHE units and purge units that were sold for retrofit applications.

Corrective Action:

To correct this problem, a spring-loaded copper cap is to be installed on top of the drier cores. Refer to Figure 1. The spring-loaded cap will maintain tension on the drier cores, preventing movement. The existing filter cap in the affected units should be replaced with the new cap during routine Purifier Purge maintenance. As of January 1991, all Purifier Purge units are being manufactured with the spring-loaded cap.

Figure 1
Purge Tank with Spring-Loaded Drier-Core Cap Installed

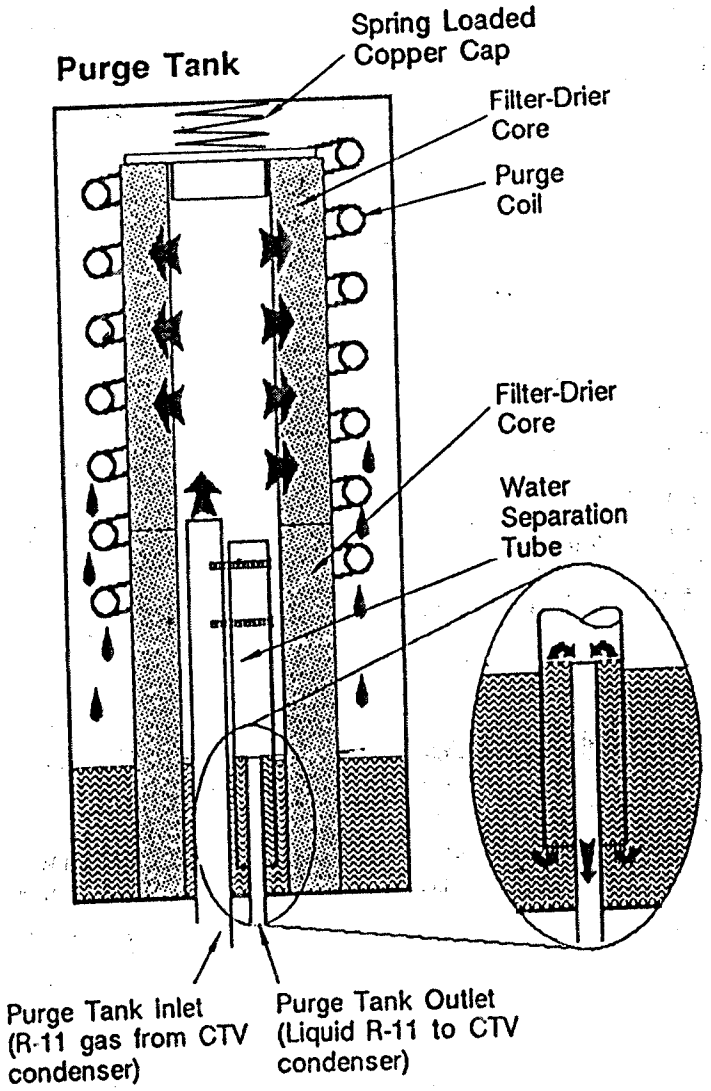

©American Standard Inc. 1991

Parts Ordering Information:

Order one spring-loaded drier-core cap for each purge unit affected using the following part number:

Trane Part No. CAP0282 = Drier-Core Cap; Spring-Loaded

Order from LaCrosse, "Ship from 31".

II. Drier Core Disintegration:

Discussion:

In a number of instances, drier-core disintegration has been discovered on the outside surface of the drier core. Disintegration occurs when the drier cores become saturated with water. This results in a desiccant powder which may flow into, and restrict the liquid return line.

When saturation of the drier cores occur, free water collects in the purge tank. With the presence of free water in the tank, disintegration of the drier cores may occur in one, or both, of the following areas on the drier-core surface:

- Near the bottom of the purge tank, where a layer of liquid refrigerant is maintained. It is in this area where drier-core granules decay from constant exposure to free water which floats on the refrigerant surface.

- If purge tank temperature falls below 32 F during purge operation, the water near the outside surface of the saturated drier cores may freeze next to the purge coil. Freezing will also cause granules of the drier core to decay.

Units Affected:

All Purifier Purge units manufactured to date.

Corrective Action:

Present corrective action for this problem is to stress the importance of periodic inspection of the moisture indicator. On factory-installed purge units, a moisture indicator is provided in the liquid return line from the purge tank to the CenTraVac condenser. This allows the machine operator to monitor the quality of the refrigerant in the system. Refer to "Moisture Monitoring and Removal" in the Trane Purifier Purge operation and maintenance manual. The current Purifier Purge operation and maintenance literature (PRG-OM-3) is being revised regarding moisture in the system and will be reissued as PRG-OM-3A.

Although the Trane Purifier Purge incorporates two high-capacity filter-drier cores for dehydration, they are <u>not</u> designed to remove free water from the purge tank. If there is excessive moisture in the system, remove the drier cores and operate the purge system continously for 24-48 hours. Once all excess water has collected in the purge tank, remove the water, following the procedures in the operation and maintenance literature. If excessive moisture is a persistent problem, it is recommended that a Trane Interclean™ unit be installed to provide continuous moisture removal.

Warning: Do not operate with drier cores installed if free water exists in the purge tank.

Parts Ordering Information:

There is no parts ordering requirement for the drier core disintegration problem.

III. 24-Hour Fault Timer Setting:

Discussion:

The Purifier Purge "smart timer" is a key component for protecting the chiller's refrigerant charge. The desired time setting of the fault timer is operator-selectable on a 10-Bit Dip Switch located on the timer. The factory setting on this timer is 12.8 minutes, and the maximum recommended setting is 20 minutes. However, the purge operation maintenance manual (PRG-OM-3) suggests that any setting within the variable range (0.1 thru 102.3 minutes) is acceptable. This is not true.

Units Affected:

All Purifier Purges, design sequence 1C, that were manufactured between October 1, 1990 and current production are affected. This includes both purges that are factory-mounted on CVHB and CVHE units, and purge units that were sold for retrofit applications.

Corrective Action:

Check the purge fault timer setting. Allowable settings range from 1.0 minute to 20 minutes. Correct the setting of any timer not set within this range. The operation and maintenance literature will be revised to clarify the acceptable range. No labor is authorized for this action.

IV. Smart Timer Fault-Bypass Premature Reset:

Discussion:

The purifier purge unit can be operated in a "fault-protection-bypass" mode. During this mode, the fault timer (3DL2, 6DL2) ignores all purge pumpout activity. A problem has been identified in a number of instances where the 24-hour fault timer resets itself back to the normal fault-protection mode even though it is supposed to be in the bypass mode. This is caused by electrical noise generated by the temperature switch (3S15) and the pumpout solenoid valves (3L1, 3L3).

If the timer resets itself to the normal mode prematurely when a large amount of air or nitrogen is present in the system, the following will occur:

- The purge pumpout compressor will operate until the accumulated buffer time of the fault timer exceeds the setting of the timer.

- Once the buffer time is exceeded, the timer detects a fault and turns the purge unit off.

- The fault condition will remain until timer power is manually cycled for more than 1/2-second.

 ©American Standard Inc. 1991

Units Affected:

All Purifier Purge units, design sequence 1C, that were manufactured between October 1, 1990 and February 18, 1991 are affected. This includes both purges that are factory-mounted on CVHE and CVHB units and purges that were sold for retrofit applications.

Corrective Action:

As a field fix for this problem, a Quencharc surge suppressor should be installed across service switch 3S4. Refer to the electrical schematic in Figure 2. Remove the wire from each side of the service switch. Push the end terminals of the surge suppressor onto the switch and reattach the wires removed from the switch to the piggy-back terminals on the surge suppressor.

Because operation in fault-protection bypass mode is not often required, this problem is not of an urgent nature. The surge suppressor should be installed during routine purge maintenance. No labor is authorized for this procedure. As of February 18, 1991 all Purifier Purge units are being manufactured with the surge suppressor factory-installed. Future plans include replacement of the present fault timer with one that utilizes a built-in surge suppression device.

Parts Ordering Information:

Order one Quencharc Surge Suppressor for each Purifier Purge unit affected using the following part numbers:

Trane Part No. SPS0019 = Quencharc Surge Suppressor

Order from LaCrosse, "Ship from 31".

Figure 2
Quencharc Installation Schematic For Factory-Mounted Purifier Purge

(CNTY PMTD)
(CNTL RSET)

DEVICE DESIGNATION	LEGEND DESCRIPTION
3B5	CONDENSING UNIT
3B6	PUMPOUT COMPRESSOR
3DL2	TIME DELAY RELAY
3DS1	CONDENSER RUN LIGHT
3DS2	FAULT INDICATION LIGHT
3DS3	BYPASS LIGHT
3K4	CONTROL RELAY
3L1 & 3	SOLENOID VALVES
3M1	MINUTE METER
3S4	SERVICE SWITCH
3S5	BYPASS SWITCH
3S6	TIMER RESET SWITCH
3S15	TEMPERATURE SWITCH
3TB1	PURGE TERMINAL BLOCK

⚠ WARNING
HAZARDOUS VOLTAGE!
DISCONNECT ALL ELECTRIC POWER INCLUDING REMOTE DISCONNECTS BEFORE SERVICING.
FAILURE TO DISCONNECT POWER BEFORE SERVICING CAN CAUSE SEVERE PERSONAL INJURY OR DEATH.

⚠ AVERTISSEMENT
VOLTAGE HASARDEUX!
DECONNECTEZ TOUTES LES SOURCES ELECTRIQUES INCLUANT LES DISJONCTUERS SITUES A DISTANCE AVANT D'EFFECTUER L'ENTRETIEN.
FAUTE DE DECONNECTER LA SOURCE ELECTRIQUE AVANT D'EFFECTUER L'ENTRETIEN PEUT ENTRAINER DES BLESSURES CORPORELLES SEVERES OU LA MORT.

IMPORTANT
USE COPPER CONDUCTORS ONLY TO PREVENT EQUIPMENT DAMAGE. UNIT TERMINALS ARE NOT DESIGNED TO ACCEPT ANY OTHER WIRING.

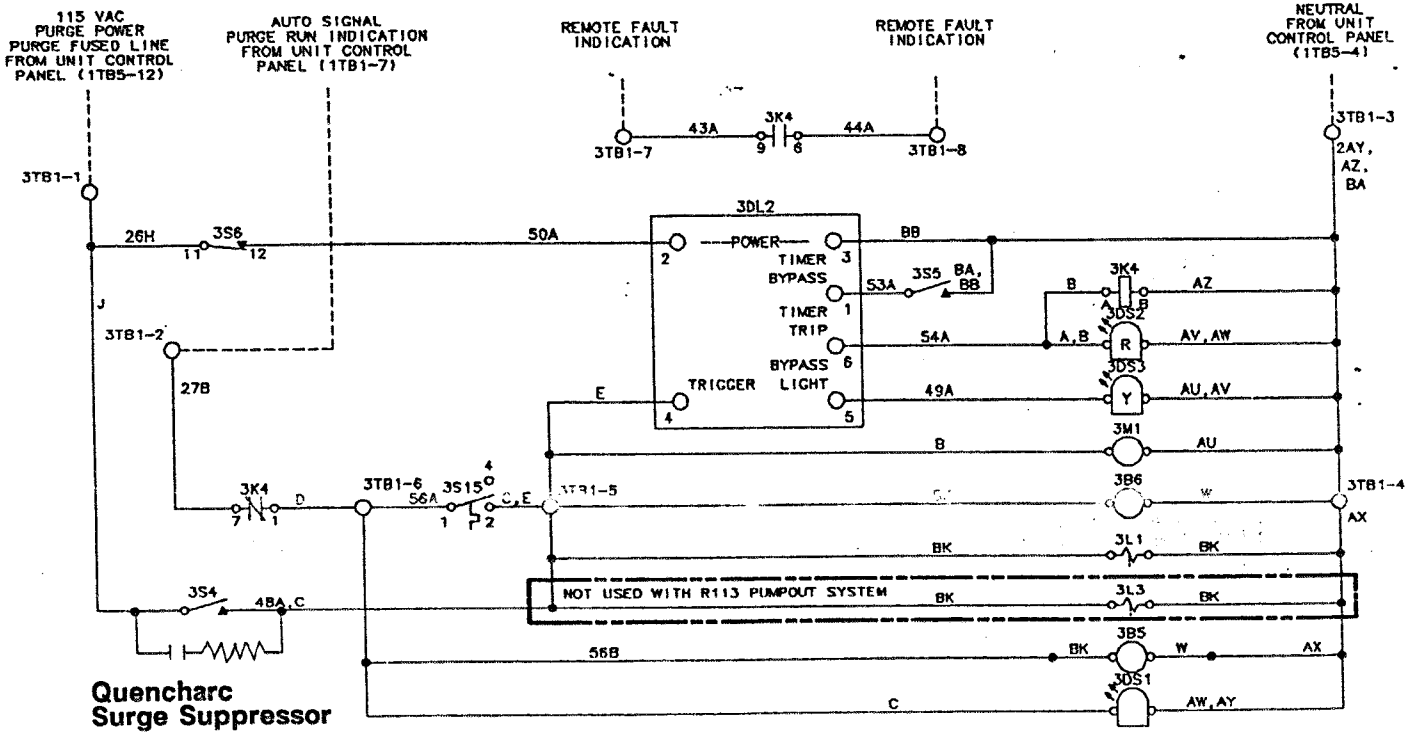

2306-7132B

Printed By INLAND GRAPHIC SERVICES, La Crosse WI TH/RHS

TRANE

General Service Bulletin

PRGA-SB-3

Library	Service Literature
Product Section	Refrigeration
Product	Centrifugal Liquid Chillers, Water-Cooled
Model	PRGA
Literature Type	General Service Bulletin
Sequence	3
Date	July 20, 1992
File No.	SV-RF-CTV-PRGA-SB-3 7/92
Suprercedes	

Literature Change History:
PRGA-SB-3 (7/92) -- Original Issue

Subject: Purifier Purge Restrictor Rework

Introduction:

The purpose of this bulletin is to provide details and authorization for the retrofit of selected Purifier Purge units, Model PRGA.

Discussion:

It has been determined that selected Purifier Purges built in early May, 1992, may have shipped without a restrictor at the inlet of the purge pump. The omission of this restrictor reduces the separation efficiency of the purge.

Units Affected:

The following units are affected and need to be retrofit.

Since the Trane Company has a policy of continuous product improvement, it reserves the right to change specifications and design without notice. The installation and servicing of the equipment referred to in this booklet should be done by qualified, experienced technicians.

Sales Order No.	No. of Units
L4-S135A	4
W2-T281B	5
V3-J044C	1
B4-G838B	5
M1-R485A	2
E1-D983A	1
E1-D982A	1
Q1-J675A	1
D6-T059A	2
E2-X295A	1
W4-V251A	2
J1-H109C	2
E4-P173A	1
E4-P175A	3
Y3-G026A	2
N4-X128A	1
E1-D989A	2
K1-B098A	2
L4-S135B	3
B4-G838C	5
E5-E300A	4
C5-T283B	5
TS-T908A	1
K1-B094A	2
E7-G232B	3
A1-Q256A	2
M1-R505A	2
D3-Z334A	1
55-P780A	3
B3-Z030A	2
C5-T283C	5
L4-S135C	3

Corrective Action:

Determine the number of purges affected by this retrofit and order the appropriate number of restricted tee assemblies described in the "Material Authorization" section of this bulletin. Replace the existing tee with the new assembly.

©American Standard 1992

Parts Ordering Information:

The following part should be ordered from the local Trane Service Agency:

Item	Part No.	Qty Req'd per Unit
Restricted Tee Assembly	TEE-0105	1

Material Disposition:

The original tee assemblies should be scrapped in the field.

Exceptions

Any exceptions to the guidelines established in this bulletin must be authorized in writing by the Trane Company.

TRANE

Service Bulletin

PRGC-SB-1

Library	Service Literature
Product Section	Commercial After market Products
Product	Purifier Purge™
Model	PRGC
Literature Type	General Service Bulletin
Sequence	1
Date	March 1994
File No.	SV-CAP-PRGC-SB-1-394
Supersedes	New

Purifier Purge™ Human Interface Software Retrofit

Problem Discussion

A software problem has been identified on the Purifier Purge™ with microprocessor controls. The problem causes erroneous alarms to be displayed through the Human Interface while operating in the "Adaptive" and "On" modes. The alarms do not interrupt the normal operation of the purge and any subsequent alarms will take precedence. An EPROM chip change in the Human Interface Module (6U1)is required.

The purpose of this Service Bulletin is to alert you to this problem and to provide instructions to remedy the software problem.

Units Affected

All Retrofit version Model PRGC Purifier Purges shipped between September 24, 1993 and January 5, 1994 are affected. This covers units with Serial Numbers L93J0901 through L93M12630.

Note: PRGC Purges provided on new CVHE/F CenTraVacs are NOT affected.

Material Authorization

The following part should be ordered from a Trane Parts Center for each affected purge in your territory.

Item	Part Number	Qty Req'd per Purge
EPROM Chip	CHP0020	1

Since the Trane Company has a policy of continuous product improvement, it reserves the right to change specifications and design without notice. The installation and servicing of the equipment referred to in this booklet should be done by qualified, experienced technicians.

©American Standard Inc. 1994

Repair Instructions

The existing EPROM chip in the Human Interface Module (6U1) must be replaced. Due to the delicate nature of this chip change, it should be performed by a technician familiar with servicing electronic components.

1. Disconnect power from the purge unit.

   WARNING! Failure to disconnect all power to the unit before performing this repair can result in cause equipment damage and/or serious bodily injury or death.

2. Remove the 4 screws on the front of the Human Interface module (6U1) and while touching only the metal faceplate, carefully tilt the module forward.
3. Locate the EPROM chip in the approximate center of the module. Using a chip puller or a small screwdriver, carefully remove the chip from the socket. If using a screwdriver, be sure to evenly pry out the chip to avoid any damage to the socket. Do not attempt to pull the chip out with your bare hands. Remain in contact with the metal faceplate at all times whilereplacing the EPROM chip.
4. Ground yourself immediately prior to removing the new EPROM from the shipping box. Match the notch on the chip to the notch in the socket, carefully line up the pins with the socket and press the new chip in place. Again, remain in contact with the metal faceplate at all times.

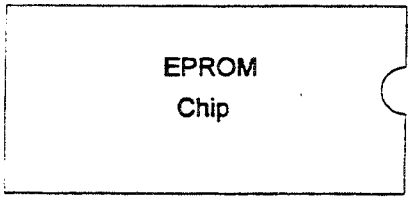

Caution: Electrostatic discharge can damage sensitive electronic components such as those located on this circuit board. Always ground yourself by touching a metal object such as the control box of the purge before coming into direct contact with any of the components on the board.

5. Tilt the module back into place in the enclosure and replace the 4 screws.
6. Apply power to the purge. Upon applying power, the display should light and within a few seconds display the words American Standard and the software code number. The proper software code is 6200-0052-02. (This number is also shown on the label on the back of the chip.)

Material Disposition

The defective part should be disposed of in the field.

New Production

All purges shipping after January 5, 1994 include the latest software revisions.

TRANE

General Service Bulletin

PRGC-SB-2

Library	**Service Literature**
Product Section	**Refrigeration**
Product	**Purifier Purge**
Model	**PRGC**
Literature Type	**General Service Bulletin**
Sequence	**2**
Date	**July 1997**
File No.	**SV-RF-PRG-PRGC-SB-2-797**
Supersedes	**New**

Subject: Unexplained Purge Pumpout

Introduction:

This service bulletin details Unexplained Purge Pumpout conditions that can affect PRGC style Purifier™ purges with HCFC-134a refrigerant. Purges having unexplained pumpout problems exhibit excessive pumpout minutes virtually from the point of startup.

Units Affected:

PRGC Purifier purges with refrigerant HCFC-134a, design sequence CO and DO, could exhibit this problem.

Discussion:

Occasional complaints of Purifier purges experiencing excessive pump-outs have been received. Virtually all such complaints can be resolved with careful examination of the purge and chiller. Common things that can imitate this condition are:

1. Excessive air in the chiller
2. Plugged pumpout restrictor
3. Plugged pumpout tubing
4. Leaks on the pumpout circuit tubing
5. Failed solenoid valve
6. Faulty pumpout compressor

©American Standard Inc. 1997

Since the Trane Company has a policy of continuous product improvement, it reserves the right to change specifications and design without notice. The installation and servicing of the equipment referred to in this booklet should be done by qualified, experienced technicians.

Discussion: (continued)

7. Faulty temperature sensor
8. Vapor or liquid connections below the liquid level in the chiller condenser
9. Plugged vapor or liquid lines to the condenser
10. Leaking filter drier canister or cover not on tight
11. Plugged filter drier cores
12. Leaking purge tank around the sight glass
13. Faulty 3U1 module - stuck contacts
14. Plugged purge sump drain line
15. Installation error - retrofit purifier purges
16. If none of the above — Unexplained Pumpout

Whenever there is an excessive pumpout complaint, these possible causes should be investigated. The vast majority of complaints are resolved through discovery of one or more of these factors.

In very rare instances, no apparent cause can be found for the excessive pumpout. Experience has revealed a combination of previously unknown conditions that could cause excessive pumpout complaints for PRGC Trane HCFC-134a equipped Purifier™ purge units. These factors include condensing unit performance, charge and heat exchanger component layout geometry that effect refrigeration system performance.

It is believed that an unusual combination of these factors could cause the unexplained purge pumpout complaints seen on some PRGC purges.

Whenever a "purge fault" pumpout alarm occurs, the operator is encouraged to check for evidence of non-condensibles in the chiller. If evidence of non-condensibles is not found, the operator should not use the "24 hour override" to bypass the pumpout alarm. Instead, a technician should check and rule out all of the fifteen excessive pumpout causes above. In most cases, one or a combination of these causes will explain the problem.

If all common causes of excessive pumpout have been ruled out, the purge should be evaluated to see if its performance characteristics are consistent with the unexplained purge pumpout problem. The unexplained purge pumpout problems on PRGC purges are characterized by:

a. Repeated "purge fault" pumpout alarms in the apparent absence of non-condensibles in the chiller. These alarms have been evident from purge startup.

b. These unexplained "purge fault" alarms only occur when the chiller is operating and chiller condensing temperatures are above 80° F.

To verify that a purifier purge has this unusual condition, monitor the chiller's saturated condenser refrigerant temperature during purge operation. The saturated condenser refrigerant vapor provides the load for the purge tank. Adjust the tower water or building load to obtain a 75° F saturated condenser refrigerant temperature and check the purge's suction temperature. Slowly increase the tower water or building load to obtain a 110° F saturated condenser refrigerant temperature and observe the purge suction temperature.

If the purge suction temperature drops to a very low temperature (for example, -6° F) and stays there at any point during this test, an "unexplained pumpout purge" has been identified. Verify by decreasing the saturated condenser refrigerant temperature. The suction temperature of an unexplained pumpout purge will rise and approach the condenser temperature at some point while the saturated condenser refrigerant temperature is lowered.

Material Required:

The following parts should be ordered from a Trane Parts Center for each Purifier™ purge that is retrofit.

- Filter Drier - DHY 0294
- Expansion Valve - VAL 4418
- 1/4" copper refrigeration tubing (field supplied)

Repair Instructions:

Rework the Purifier™ Purge using the following steps:

1. Close the chiller refrigerant 5/8" vapor pick-up and 1/4" drain line valves.
2. Recover the R-123 refrigerant from the purge tank using 1/4" access valve on the tank (water drain valve). Dispose / reclaim in accordance with all local, state and federal codes.
3. Remove insulation from the top of the purge tank and remove the 1/4" fusible plug from the top of the tank.
4. On the R-134a system, install a line tap valve or equivalent on the suction and discharge (or liquid) lines and recover the R-134a charge. Dispose / reclaim in accordance to all local, state and federal codes.
5. Remove the line tap valves and permanently braze line access valves (Shrader or equivalent 1/4" size) in their place. Be sure to purge dry nitrogen through the system while brazing, to prevent copper oxides from forming in the refrigeration system.
6. Cut the 3/8" refrigerant line entering the top of the purge tank just below the swaged (belled) connection using a tubing cutter. A short stub of straight 3/8" line should protrude from the top of the tank to allow installation of the new expansion valve. Cut the line or unsweat the filter-drier at the entering connection closest to the condenser. Be sure to flow dry nitrogen through the line if unsweating. This will allow removal of the expansion valve and filter-drier in one section. Dispose of the lines, expansion valve and filter-drier per all local, state and federal codes.
7. Form a new 1/4" copper line as shown in the photographs on the following page. Use refrigeration grade copper tubing.
8. Fit up the new expansion valve, 1/4" line and filter drier. With shrader valve cores removed, flow a small amount of dry nitrogen through the R-134a refrigeration circuit. Introduce the nitrogen through the suction fitting and feel for a slight flow from the discharge or liquid fitting.
9. Flow dry nitrogen into the purge tank R-123 side through the 1/4" access valve on the lower tank. A slight positive flow should be felt from the top of the purge tank at the 1/4" pipe fitting hole where the fusible plug was removed.

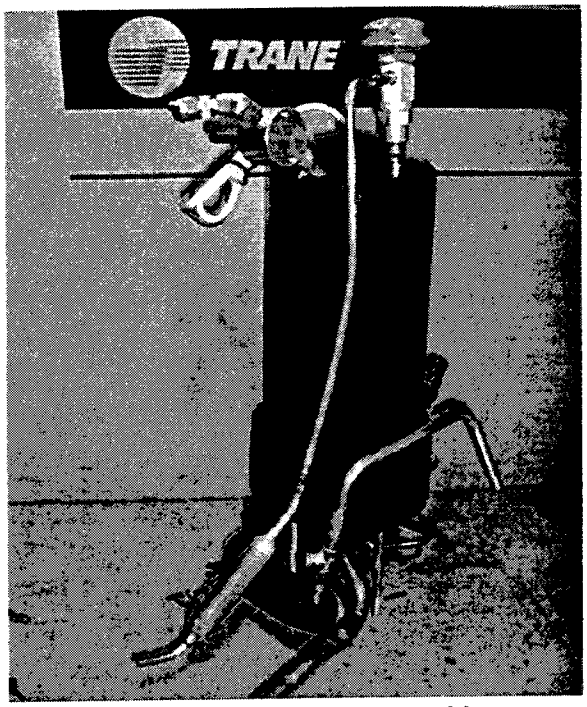

Valve Location and Tubing Assembly (Note: Filter Drier should be installed at approximately 45°angle as shown.)

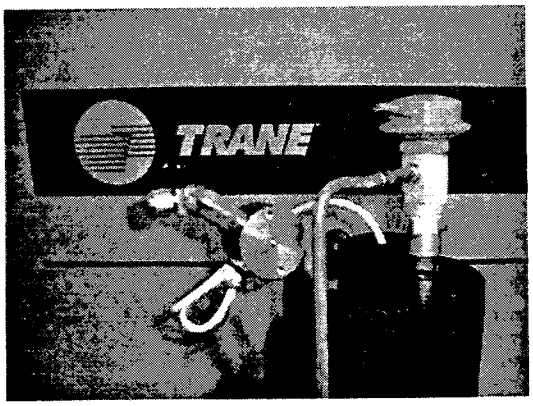

Valve Location

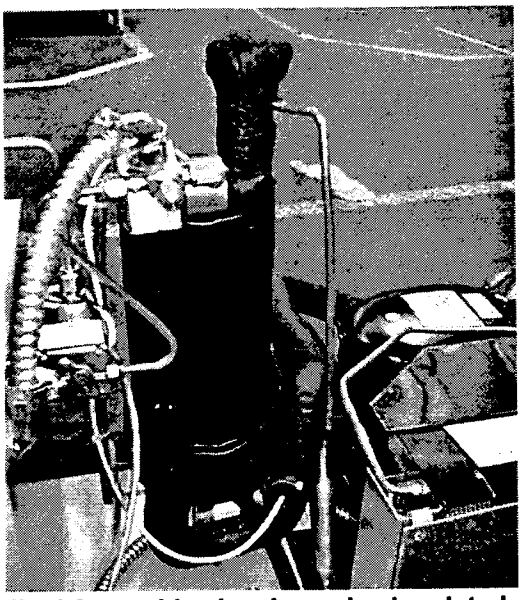

Final Assembly showing valve insulated

10. Braze the expansion valve, 1/4" line and filter drier assembly using a high temperature silver brazing alloy such as BCuP-5 (15% silver), which does not require flux for copper to copper joints. Be sure to use care while brazing the expansion valve to not overheat and disturb surrounding braze joints.

11. After allowing the joints to cool, discontinue the dry nitrogen flow and replace the shrader cores in the valves. Introduce a trace amount of R-22 vapor, 20 psig or so, and charge dry nitrogen to a final pressure of 75 psig into the R-134a refrigeration circuit. Leak check the system using a sensitive electronic leak detector. Repair any leaks found being sure to flow dry nitrogen through the system while brazing.

12. Reinstall the fusible plug in the top of the purge tank. Using R-22, pressurize the purge tank R-123 refrigeration side to 15 psig. Leak check the system using a sensitive electronic leak detector. Repair any leaks found, being sure to flow dry nitrogen through the system if brazing is required to repair the leak.

13. Reinsulate the expansion valve and top of the purge drum as shown in the photograph above.

14. Evacuate the R-123 system at the purge tank access valve to at least 1000 microns.

Evacuate, dehydrate and charge the R-134a system using the following procedure:

1. Attach a vacuum pump to the high and low side of the system, use a micron gage and monitor the vacuum level for at least a 60 minute period. A heat lamp placed on the compressor sump can be used to enhance the dehydration/evacuation process. Values as low as 10-100 microns may occur.

2. Isolate the unit for a 30 second vac rise test and note the result.
   - If the pressure rises steadily to atmospheric, a leak is indicated. Repair the leak and repeat the evacuation and dehydration test.
   - If the pressure initially rises rapidly and then stabilizes with a very slow rate of rise to a value greater than 600 microns but lower than atmospheric at 30 seconds, moisture is still present in the system. Repeat the evacuation and vac rise test. If moisture is not adequately removed using this procedure, a triple evacuation with heat lamps on the compressor sump and purge tank may be necessary.
   - If the pressure initially rises rapidly and then stabilizes with a very slow rate of rise to a value less than or equal to 600 microns at 30 seconds, the unit passes the vac rise test and is ready for charging.

3. Charge the unit with 8 oz of R134a.
   - Replace the micron gage with a vacuum/pressure gage (30 inHg -150 psig) with good accuracy in the 0-10 psig range.
   - Introduce the charge into the purge unit with the condensing unit running. The condenser sub cooling (the difference between the third u-bend and leaving condenser temperatures) should be between 9-10°F with the proper amount of charge in the unit.
   - As charge is introduced, the condensing unit compressor suction temperature may drop, depending on the amount of air remaining in the chiller refrigerant circuit.
   - Observe the pressure gauge after about five minutes. The pressure should fall between 2 - 6 psig.
   - If the pressure is higher than 10 psig, then the expansion is faulty and needs to be changed along with the filter drier. After changing the expansion valve and filter drier, repeat the leak, evacuation and dehydration tests.
   - If the pressure is less than 1 psig after about 1/2 hour one or more of the following may be occurring:
     — a blockage may exist in the refrigerant circuit
     — the expansion valve is faulty
     — the unit is undercharged
     thus inhibiting proper refrigerant metering.
     Repair as required.
   - With the chiller valves open, verify that the suction temperature approaches the chiller condenser saturation temperature. Introduce nitrogen into the purge tank through the water bleed valve and verify that the purge suction temperature drops and a pumpout cycle occurs.

Material Disposition:

The defective materials should be disposed of in the field in accordance with local codes.

New Production:

All purges design sequence EO shipping approximately after June 24, 1997 have the relocated expansion valve.

TRANE®

Installation Operation Maintenance

RMWD-IOM-1D

Library	**Service Literature**
Product Section	**Commercial Aftermarket Products**
Product	**Refrigerant Monitor**
Model	**RMWD**
Literature Type	**Installation/Operation/Maintenance**
Sequence	**1D**
Date	**November 1997**
File No.	**SV-CAP-RM-RMWD-IOM-1D-1197**
Supersedes	**RMWD-IOM-1C-196**

Trane™ Refrigerant Monitor

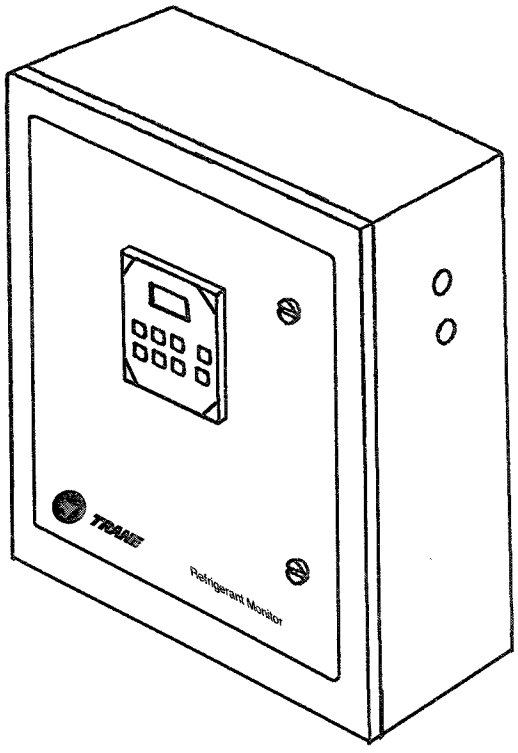

X39640430-02

Since the American-Standard Company has a policy of continuous product improvement, it reserves the right to change specifications and design without notice. The installation and servicing of the equipment referred to in this booklet should be done by qualified, experienced technicians.

© American Standard Inc. 1997

Table of Contents

WARNING

This manual, including the warnings and cautions inside, must be carefully read and followed by all persons who use or maintain this product, including those who have any responsibility involving its selection, application, service or repair. This monitor will perform as designed only if used and maintained according to the instructions. otherwise, it could fail to perform as designed and persons who rely on this product could sustain serious personal injury or death.

Page	Description
3	**Model Number and Nameplates**
4	**General Information**
4	Literature Change History
4	Receiving
4	Unpacking
4	Warnings and Cautions
5	Unit Description
5	—Clear Language Display
6	**Installation**
6	Location of the Unit
6	— Locating the Monitor
6	— Locating the Sensing Point(s)
7	— Room Configuration
7	— Airflow Patterns
7	— Equipment Configuration
7	— Activity in the Room
7	Mounting
9	— Sample Tubing Installation
9	— Exhaust Tubing Installation
10	**Electrical Connections**
11	—Trane Unit Mounted Refrigerant Monitor (Optional)
11	— Unit Power Wiring
12	— Alarm Relay Wiring
12	— Analog Output Wiring
13	— Remote Alarm Reset
13	— Audible Alarm Output
13	— Remote Display Wiring (Optional)
13	— Auxiliary Input
14	**Operation**
14	Display Overview
15	Menu Overview
18	— Operating Modes
18	— Current Refrigerant Concentration
18	— Alarm Status
18	— Trouble Status
19	— STATUS Side Menu
19	— SETTINGS Side Menu
21	— CALIBRATION Side Menu
21	— REFRIGERANT ZERO Side Menu
22	— REFRIGERANT SPAN Side Menu
23	— Remote Alarm Reset
23	— Audible Alarm Output
24	— Auxiliary Input
25	— Monitor Cross-Sensitivity
26	**Calibration**
26	Material Required
26	Preparing for Calibration
26	Zero Calibration Check
27	Refrigerant Span Calibration Check
29	**Troubleshooting**
31	**Technical Specifications**

List of Figures

Page		Description
3	Figure 1	Typical Unit Nameplate Data
3	Figure 2	Typical Shipping Package Data
6	Figure 3	Typical RMWD Refrigerant Monitor Installation
8	Figure 4	Physical Data
9	Figure 5	Typical Filter Installation
10	Figure 6	Field Electrical Connections
11	Figure 6A	Optional Field Electrical Connections
12	Figure 7	Fuse and Jumper
14	Figure 8	Clear Language Display
15	Figure 9	Menu Flow Schematic
16-17	Figure 10	Refrigerant Monitor Menu Screens
24	Figure 11	Auxiliary Alarm Example
28	Figure 12	Zero Calibration Check Connections
28	Figure 13	Span Calibration Check Connections
30	Figures 14, 15	Instrument Flow Diagrams

Model Number and Nameplates

Unit Model Number

For service and replacement purposes, the Trane Model RMWD Refrigerant Monitor is assigned a multiple-character alphanumeric model number that precisely identifies each unit. The model number key is shown here.

Use of the model number will enable the owner/operator, installing contractor, and service technician to define the characteristics of any RMWD unit. Be sure to refer to the model number when ordering replacement parts or requesting service.

Sample Model Number

Model No.	RM	W	D	120	0	A	A0
Digit No.	1, 2	3	4	5,6,7	8	9	10,11

Digits 1,2
Product Description
RM = Refrigerant Monitor

Digit 3
Mounting Configuration
U = Unit Mount
W = Wall Mount

Digit 4
Development Sequence
D = 4th

Digit 5
1 = With Scanner
2 = Without Scanner

Digit 6
Human Interface
1 = With Clear Language Display
2 = Without Clear Language Display

Digits 7,8
0 = Not used

Digit 9
Gas Analyzed

A = HCFC-123	G = CFC-114
B = CFC-11	H = CFC-500
C = HCFC-22	J = CFC-502
D = HFC-134a	K = Ammonia*
E = CFC-12	S = Special
F = CFC-113	

* Not Listed

Digits 10,11
Design Sequence
A0 = First Design Sequence

Nameplates

The Model RMWD unit nameplate is located on the right side of the monitor (when facing the front). The nameplate includes the service model number, unit serial number and electrical information. Refer to this information whenever making inquiries or ordering replacement parts. A nameplate is shown below in Figure 1. An abbreviated version of the nameplate is also provided on the outside of the shipping package (Figure 2).

Figure 1
Unit Nameplate Data

TRANE

REFRIGERANT MONITOR
CALIBRATED FOR _____
MODEL NO: RMWD100AA0
SERIAL NO: L92C0238

RATED VOLTAGE: 100-240 VOLT HZ 50/60 PH 1
VOLTAGE RANGE: 85-264 VOLTS
MIN POWER WIRE SIZE: 14 GA
MAX OVER CURRENT PROTECTIVE
DEVICE: 15 AMPS
MAXIMUM POWER INPUT: 80 WATTS

The Trane Company, La Crosse, WI 54601-7599 Made in U.S.A. URC

Figure 2
Shipping Package Data

TRANE

REFRIGERANT MONITOR
CALIBRATED FOR _____

MODEL NO. RMWD1200AA0
ORDER NO. _____
SERIAL NO. L92C07238

General Information

Literature Change History

RMWD-IOM-1 (August 1994)

Original issue of the manual pertaining to design sequence A0.

RMWD-IOM-1A (November 1994)

Manual revised to include:

- Expanded product line for various refrigerants
- Additional audible alarm capabilities
- Recommended alarm levels based on refrigerant type
- Changes to Clear Language Display software from Version 1 to Version 2

RMWD-IOM-1B (March 1995)

Manual revised to include:

- UL Listing

RMWD-IOM-1C (January 1996)

Manual revised to include:

- Minor text clarifications

RMWD-IOM-1D (November 1997)

Manual revised to include:

- Updates of the Factory Default values for refrigerants

Receiving

Upon receipt of the unit, inspect the shipping carton for signs of visible damage. Report any damage to the carrier and note it on the delivery receipt. Unit must be stored in a dry, secure place prior to its installation and use. Store in the original shipping carton.

Unpacking

Carefully remove the monitor from the shipping container. Inspect it for signs of visible shipping damage. If any damage is found, report it to the shipper immediately. Do not install or operate a damaged unit without sales office approval.

Confirm all the loose items shipped with the monitor have been received. Each carton should contain:

Qty
Item

(1) Refrigerant Monitor
(1) Particle filter holder and element (3 additional filters if scanner option is provided)
(2) Power Fuses
(1) Power Jumper
(1) Installation, Operation and Maintenance manual

Note: The particle filter(s), fuses and the jumper are shipped in a small box inside the main monitor shipping carton. Make sure it does not get discarded or lost.

Report any shortages immediately to the local Trane office. Retain the original packing for re-use in the event the unit must ever be returned for service.

Warnings and Cautions

Warnings and Cautions appear at appropriate sections throughout this manual.

⚠ WARNINGS
alert the installer, owner, operator or service personnel to potential hazards that, if not avoided, could result in death or serious personal injury.

⚠ CAUTIONS
are provided to alert personnel to conditions which, if not avoided, may result in minor or moderate injury. It may also alert against unsafe practice causing damage to equipment.

General Information

Unit Description

The TraneTM Model RMWD Refrigerant Monitor circulates room air through a sensing cell to provide a continuous indication of refrigerant vapor concentration. It is intended for indoor use in mechanical equipment rooms which house air conditioning or refrigeration equipment or in areas where bulk refrigerants are stored. The monitor utilizes infra-red photo-acoustic sensing technology, allowing accurate measurement of refrigerant vapors with minimum interference from other chemicals in the vicinity. The instrument is compound-specific and factory calibrated for the specific refrigerant of interest. It is capable of measuring down to 1 ppm and displaying refrigerant concentrations from 0-1,000 parts-per-million (ppm). The monitor can signal alarms at three different concentration levels. These alarms are factory set, but can be easily adjusted in the field. A unit trouble alarm indicates internal problems with the instrument. A level alarm or a trouble alarm condition will cause the display to flash with a diagnostic message and activate a dry contact relay(s) which can be used to control external alarm lights or horns, start emergency ventilation, or signal a building management system. The refrigerant level alarm relays can be configured as latching or non-latching. 0-10 VDC and 4-20 mA analog outputs are provided for connection to a data recorder or building management s ystem. These analog outputs can be scaled as 0-100 ppm or 0-1000 ppm. The standard unit monitors one zone. The optional multi-channel scanner can be factory or field installed to monitor up to 4 zones.

Clear Language Display (CLD)

All setup, alarm, diagnostic, measured concentration and calibration information for the monitor is accessed through an 8 button, 2 line, 16 character backlit clear language display (CLD) mounted in the unit front panel.

Location of the Unit

The ability of the monitor to properly measure and display the refrigerant concentration is dependent on the location of the monitor and the sensing pick-up point(s).

Locating the Monitor

Items to consider in locating the Refrigerant Monitor include:

- Mount the unit in a location where it will be free from shock and vibration. Avoid mounting to piping or piping supports which may transmit vibration from pumps, chillers, etc.
- Mount the unit so the front panel display can be easily viewed.
- Do not locate the unit near an excessive heat source or in direct sunlight. Mount in an area of stable temperature and humidity conditions.
- Unit must be mounted in a vertical position.
- Locate in an area where it can be easily accessed for service and calibration.

Locating the Sensing Point(s)

Due to the wide variation in equipment room layouts, each situation must be analyzed individually. A sensing point may be remotely located up to 150 feet from the monitor and positioned 12 to 18 inches above the floor in an area where refrigerant vapors are most likely to accumulate.

Note: The 150 feet refers to the total sample and exhaust line length.

The following should be considered when selecting the location for the refrigerant pick-up point(s).

Figure 3
Typical RMWD Refrigerant Monitor Installation

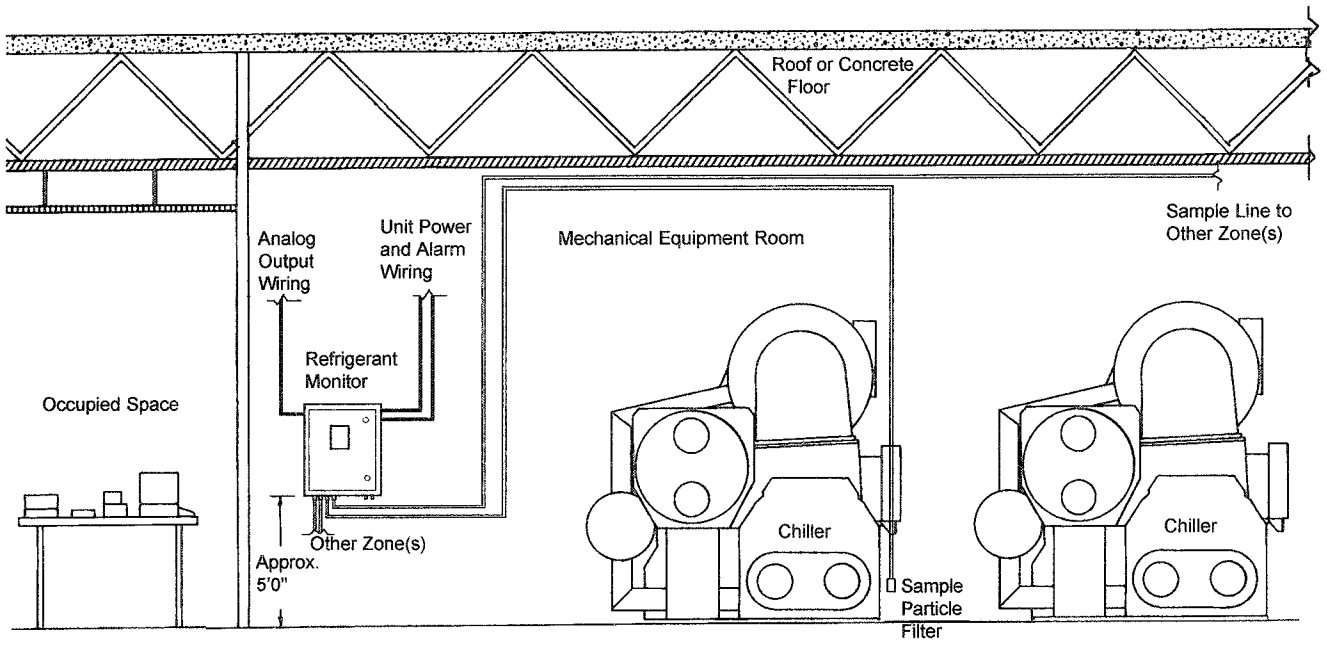

Note: Monitors without scanner option have one sampling port. Those with scanner will have four ports.

Installation

Room Configuration

Since all fluorocarbon refrigerants are three to five times heavier than air, they will concentrate near the floor and in low areas such as pits and stairwells. Large pits and stairwells should be ventilated and monitored.

Airflow Patterns

Airflow patterns can cause areas of the room to become stagnant and refrigerant vapors to accumulate. The sampling point should be between the refrigerant source (typically the chiller) and the ventilation exhaust inlet. Smoke tubes are useful in determining the ventilation patterns.

Equipment Configuration

The equipment arrangement in the room can also have an impact on the most effective place to sample. As a general guideline, if there is one chiller in the room, sample at the perimeter of the unit. For two chillers, sample between them. For three chillers, sample at the middle chiller. With four or more chillers, multiple monitors or a single monitor with a multi-point sampling system should be used. Typically, a sensing point can handle a radius of 50 feet; however airflow patterns must always be considered.

Activity in the Room

The expected activities in the room must also be considered when determining the sensing point. As stated earlier, refrigerants will concentrate near the floor. Typically, sampling 12-18 inches above the floor is sufficient for early warning and to provide adequate protection for someone working closely to the floor. If it is expected that an occupant's breathing zone may be less than 12-18 inches off the floor, locate the sampling point accordingly.

Note: Select sampling locations which result in the shortest possible line length to reduce transport time.

For more information on equipment room design and monitoring, refer to Trane Application Engineering Manual REF-AM-3, "Refrigeration System Equipment Room Design" available from your local Trane office.

Mounting

The monitor has four mounting tabs on the back panel of the enclosure. Securely mount the Refrigerant Monitor to the wall or structure using appropriate mounting hardware.

⚠ CAUTION

Do not mount the monitor directly to a chiller or use brackets other than those provided. Unit vibration may affect the operation of the monitor.

Physical Data

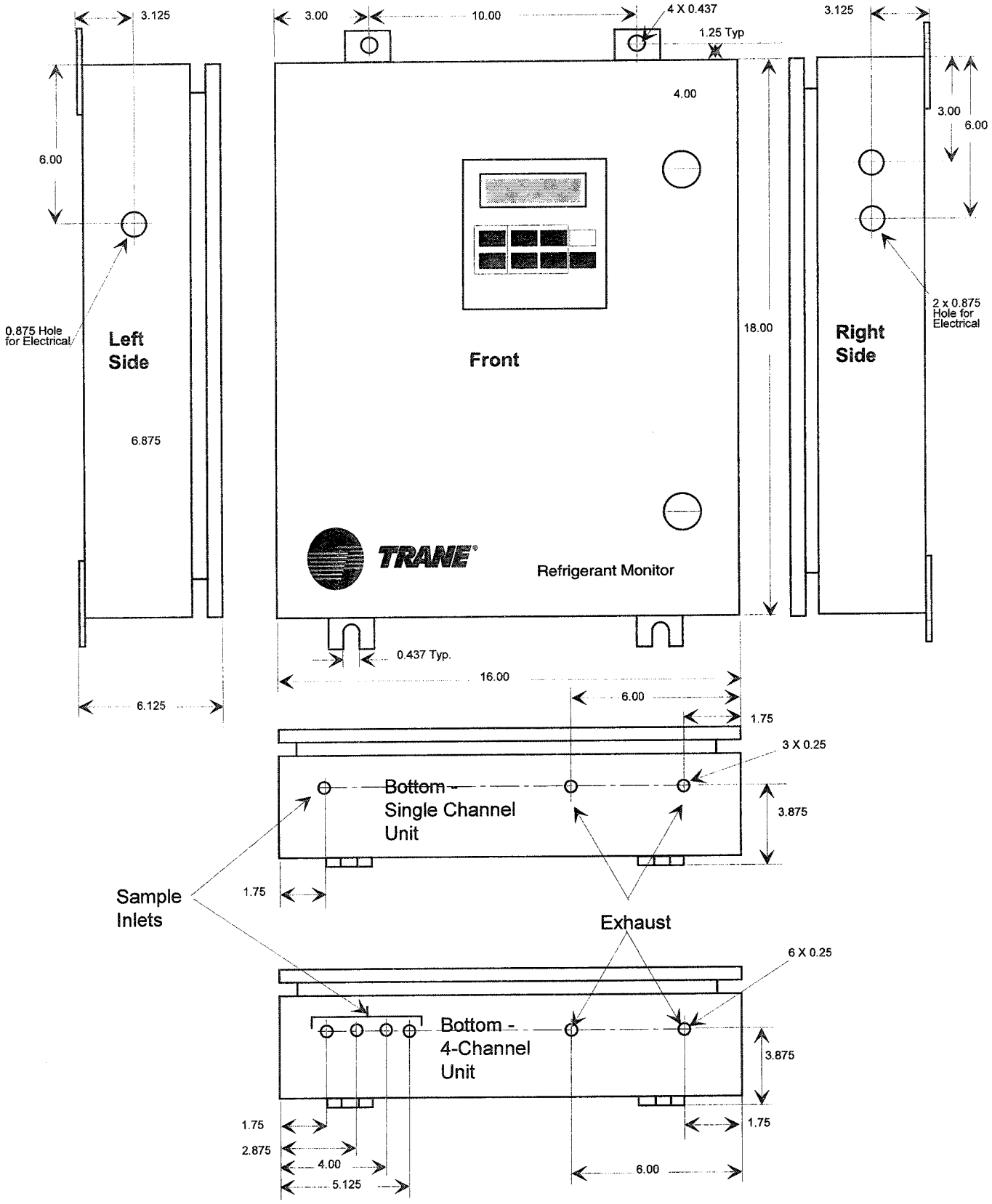

Sample Tubing Installation

Sample inlet and exhaust connections for the air sampling system are located on the bottom of the unit. (See Figure 4 for locations of the connections). The connection fittings are self-clamping and require no special tools or additional fittings. They are designed to accept 1/4 inch OD copper tubing.

⚠ Caution:
Insert only clean tubes, cut with a tubing cutter, into the fittings to ensure a smooth, contaminant-free connection.

The sampling line(s) can each be up to 150 feet long using 1/4 inch O.D. tubing.

Note: The maximum total length of the sample and exhaust line(s) is 150 feet.

Note: Install line(s) so that they can be easily removed for calibration.

Route the sample tubing to the area to be monitored. 1/4 inch O.D. rigid copper tubing with flare or compression type fittings is recommended. Soldered connections on the sample line(s) should be avoided due to the possibility of the monitor being sensitive to the solvents in the soldering flux paste. Plastic tubing should be avoided due to its tendency to absorb refrigerants which could possibly cause a delayed alarm and/or slowly leak out gas later resulting in a nuisance alarm.

After the line(s) are installed and BEFORE they are connected to the monitor, they should be blown out with compressed air or nitrogen to remove any debris and leak checked to assure they are leak-free. Then connect the line(s) to the sample port(s) on the monitor and install the end-of-line filters as shown in Figure 5.

All unused sample port(s) must have an end-of-line filter installed to avoid debris entering the unit and to retain NEMA-4 integrity.

⚠ Caution:
The end-of-line filters must be in place whenever the monitor's pump(s) are operating. Operation without sample filters will damage the unit.

Note: Trane filter element part number is ELM1144.

Exhaust Tubing Installation

The monitor has two exhaust ports. If the monitor is located in the same room as the sample inlet(s), the exhaust can be vented back into the room. If sample is coming from a separate area, the exhaust should be piped back to the same area or to another safe area. If the exhausts are vented to a remote area, the two exhaust lines must be run individually to avoid any possible effects of back pressure on the instrument.

⚠ Caution:
Never connect to a vacuum or pressure source or install in-line devices such as a flow meter in the exhaust lines. Monitor exhausts must vent to atmospheric pressure to avoid damage to the unit.

Figure 5
Typical Filter Installation

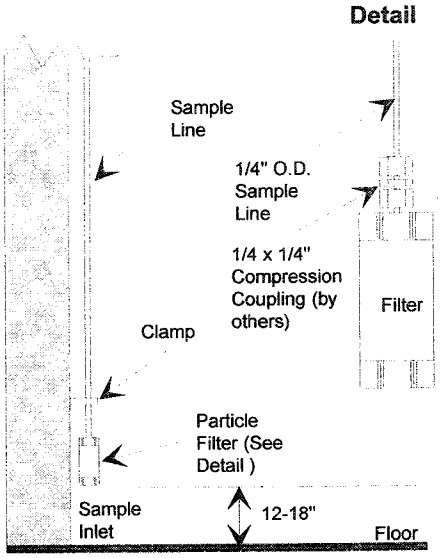

Electrical Connections

⚠ WARNING
Open all disconnects before making wiring connections. Failure to do so can result in serious personal injury or death due to electrocution.

⚠ Caution
Do not drill additional holes in the enclosure. Use the openings provided for electrical connections. Metal shavings caused by drilling may short out electronic components causing equipment malfunction.

Two 0.875 inch openings are provided on the right side of the unit and one 0.875 inch on the left side for electrical connections to the monitor. The unit ships with the holes plugged. Open only the holes necessary for your specific installation. To retain the NEMA-4 integrity of the enclosure, appropriate NEMA-4 conduit and connectors must be used for all connections.

Figure 6
Field Electrical Connections

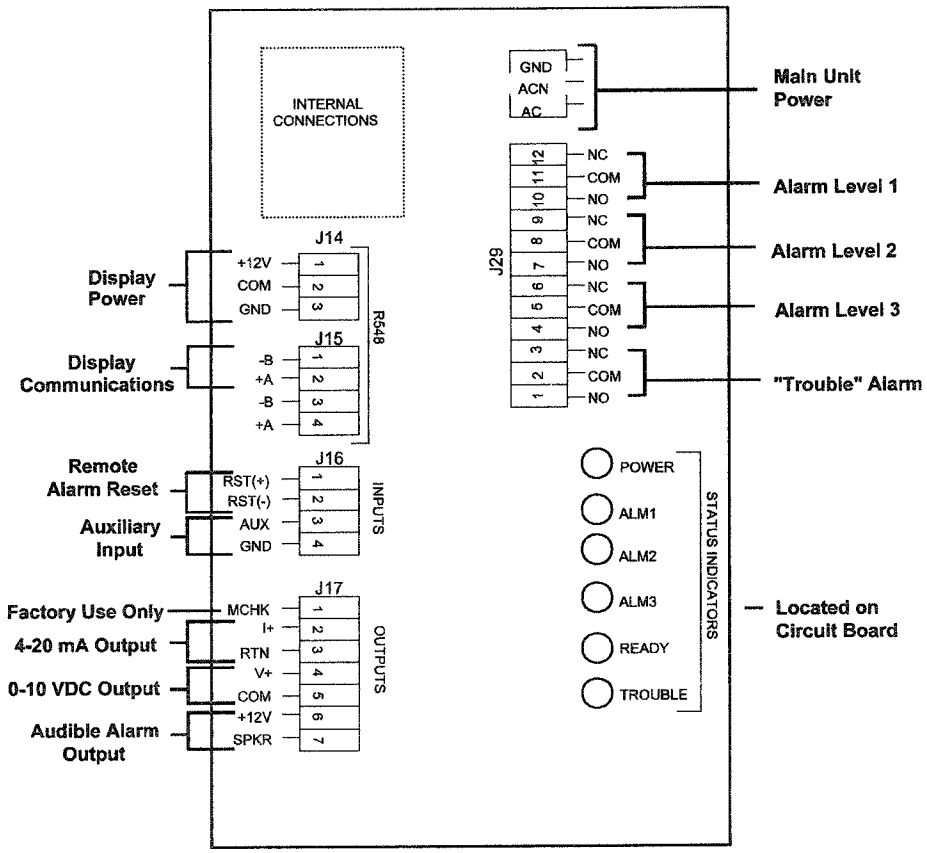

Note: See the "Electrical Connections" Section for additional wiring information.

Electrical Connections

Optional Trane Unit Mounted Refrigerant Monitor

The optional Trane unit mounted refrigerant monitor is identical to the remote mounted monitor; however no clear language display (Human Interface) is mounted to the front panel of the monitor. A plain painted front panel, with a pilot light to indicate power is present, replaces the clear language display. The chiller UCP2 Clear Language Display (Human Interface) displays monitor status and information. The UCP2 set-ups, reports, calibration and diagnostic menus are identical to the remote monitor. All monitor setups, inputs, calibration and diagnostic menus are shown in service manual, CVHE-CLD-1.

The unit mounted refrigerant monitor is designated 4U1 on • Trane wiring diagrams as shown in Figure 6A.

⚠ CAUTION

Do not install with high voltage wiring (>30 volts) sharing the same panel entrance hole or conduit with low voltage (<30 volts) wiring. Electrical interference can result.

Unit Power Wiring

A separate, dedicated power source is recommended for the refrigerant monitor to insure that the unit remains powered when other circuits are shut down for servicing, routine maintenance or shift changes.

The monitor utilizes a wide range power supply which can accept AC power from 100 to 240 volts (nominal), 50 or 60 Hz. The power wiring should enter the unit through one of the openings on the right side of the enclosure. Connections are made to the screw terminals labeled "AC", "ACN" and "GND" located in the upper right side of the unit. (See Figure 6 for location).

Figure 6A
Optional Field Electrical Connections

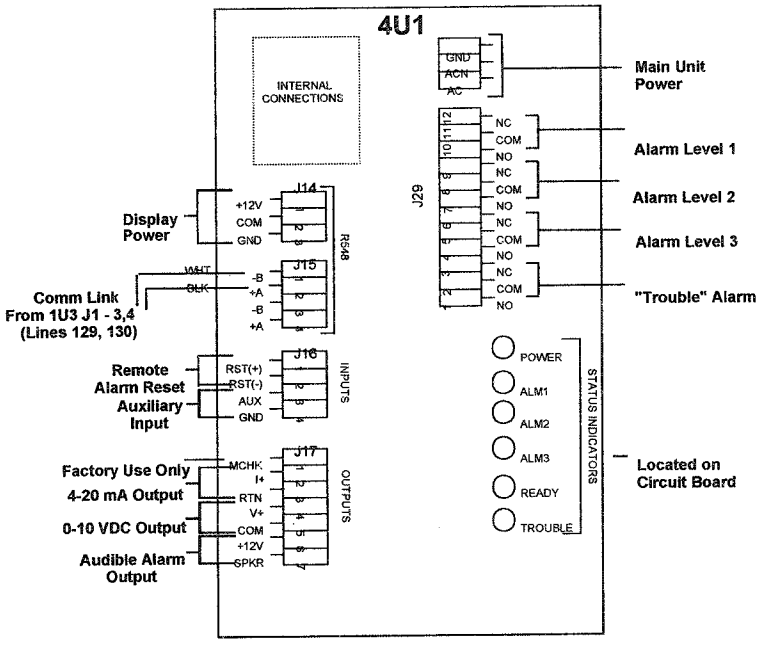

Note: See the "Electrical Connections" Section for additional wiring information.

Electrical Connections

The incoming power provided to the monitor determines the configuration of the fuse(s) and/ or jumper on the main power terminal block. The following tables show the fuse and jumper locations for various voltages.

Note: The monitor ships without fuses or jumpers in place. The unit is non-operational until they are properly configured for the power being applied.

Figure 7

Fuse



Internal Fuse
(Replaceable)

Fuse = Littelfuse 235002 or Buss GMA-2A

Jumper

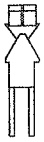

110 Volts AC, 2 Conductor

GND		GND
ACN	JUMPER	ACN
AC	FUSE	AC

220 Volts AC, 2 Conductor, 50 Hz

GND		GND
ACN	JUMPER	ACN
AC	FUSE	AC

220 Volts AC, 3 Conductor, 50 Hz

GND		GND
ACN	FUSE	ACN
AC	FUSE	AC

Alarm Relay Wiring

Three refrigerant level alarm relay outputs and one trouble relay are provided. All are Form C, SPDT relays which can be wired to either close or open its contacts in an alarm condition. Relay wiring should enter the unit through one of the openings on the right side of the unit. Connections are made at the internal terminal strip labeled J29 located on the right side of the circuit board. (See Figure 6 for location). The terminal portion of the connector can be unplugged from the circuit board for easier wire connections.

Note: It is recommended that the Trouble relay is wired as normally closed (contacts close on loss of power) to provide an alarm if main power is lost to the unit.

Contact Ratings:

Resistive Load

- 7.2 Amps @120 VAC
- 5.0 Amps @ 240 VAC

Inductive Load

- 2.88 Amps Pilot Duty
- 1/3 HP, 7.2 FLA, 43.2 LRA

Analog Output Wiring

Two types of analog outputs, a 4-20 mA and 0-10 VDC, are provided as standard. These voltage and current outputs are proportional to the displayed refrigerant concentration. The scaling of the outputs is software selectable as 0-100 or 0-1000 ppm. Connections are made to terminal strip J17 located on the lower left side of the main circuit board (See Figure 6). Analog output wiring should enter the unit through the hole provided on the left side of unit. The terminal portion of the connector can be removed from the circuit board for easier connection. 18 AWG, shielded twisted pair is recommended; 500 feet maximum length.

4-20 mA

The 4-20 mA output sources current to the module ground. Connections are made to terminals 2 (I+) and 3 (RTN) on J17.

0-10 VDC

The 0-10 VDC output sources voltage to 2 K ohms maximum load. Connections are made to terminals 4 (V+) and 5 (COM) on J17.

⚠ Caution:
Do not install with low voltage wiring (<30 volts) sharing an enclosure opening or conduit with higher voltage wiring (>30 volts). Multiple low voltage wires can however share an opening and/or conduit.

Electrical Connections

Remote Alarm Reset

Latched refrigerant level alarms can be reset through a momentary contact **opening** (normally closed set of contacts). Connections are made to terminal strip J16, terminals 1 and 2 with the wiring entering the enclosure through the hole on the left side of the instrument. The unit ships with a jumper across the reset terminals (J16, 1 & 2). The switch must have signal- level contacts, typically gold flash. The maximum distance from the reset switch to the monitor using 18 AWG shielded wire, is 300 feet. Refer to the section titled "Remote Alarm Reset" in this manual for more information about this feature.

Note: Terminate all wire shields on an appropriate ground at monitor.

Audible Alarm Output

A 12 VDC output is provided to drive an optional low-power (150 mA non-inductive maximum load) piezo-electric horn. Connection is made to terminals 6 (+12V) and 7 (SPKR) on J17. See the Installation Instructions provided with the Alarm Kit for details.

Remote Display Wiring (Optional)

The front panel clear language display can be remotely mounted up to 250 feet from the instrument. An optional blank-off panel kit is required to seal the enclosure and maintain the NEMA 4 integrity after the display is removed. The factory wiring from the display to the circuit board terminals will need to be disconnected and replaced.

Display Power:

18 AWG wire is recommended

Field Wire from:
TB2-1 on display to terminal #1 (+12V) on J14
TB2-2 on display to terminal #2 (Com) on J14
TB2-3 on display to terminal #3 (Gnd) on J14

Display Communications:

18 AWG, twisted pair shielded wire is recommended.

Field Wire from:
TB1-2 on display to terminal #1 (-B) on J15
TB1-1 on display to terminal #2 (+A) on J15

See the Installation Instructions provided with the Remote Display Option for more details.

Auxiliary Input

A 4-20 mA analog input can be made to the monitor from another device such as another refrigerant monitor or an oxygen monitor. See the section titled "Auxiliary Input" in this manual for a detailed description of this feature. The input wiring should be brought into the enclosure through the hole on the left side of the instrument and connected to terminals 3 (Aux) and 4 (Gnd) on J16. 18 AWG, twisted pair, shielded wire is recommended. Maximum length of wire run is 250 feet.

⚠ Caution:
All field wiring must be done in accordance with national and local electrical codes.

Operation

Display Overview

The human interface which is mounted to the front panel of the monitor contains eight keys and a two line, 16 character, backlit, clear language display (CLD). The displayed information is updated continuously by the microprocessor-based module located inside the enclosure. In the event of a refrigerant level alarm condition, the backlight will flash and the refrigerant concentration will be displayed. If a unit malfunction occurs, a "Trouble" alarm will be initiated and a service diagnostic message will appear. All operating parameters, setpoints, calibration and refrigerant levels are accessed through the CLD. After 60 seconds of no activity, the backlight will turn off. After 20 minutes of inactivity, (no key press) the screen will default to the first menu screen showing the operating mode, channel if a scanner is installed and the refrigerant concentration.

The keys are functionally grouped into a "View" section and a "Change" section. The "View" group includes the <Next> and <Previous> keys which are used to scroll from one menu to another.

The "Change" group includes <+> and <-> keys which are used to change set-up parameters within a menu. The <Enter> and <Cancel> keys are used to accept or reject a parameter change or to enter a side menu.

Note: The <Enter> or <Cancel> keys must be pressed after a change is made to accept or reject the change(s).

The <Auto/On> and <Stop> keys are not used for operating the Refrigerant Monitor. The monitor is "on" whenever power is applied.

Figure 8
Clear Language Display

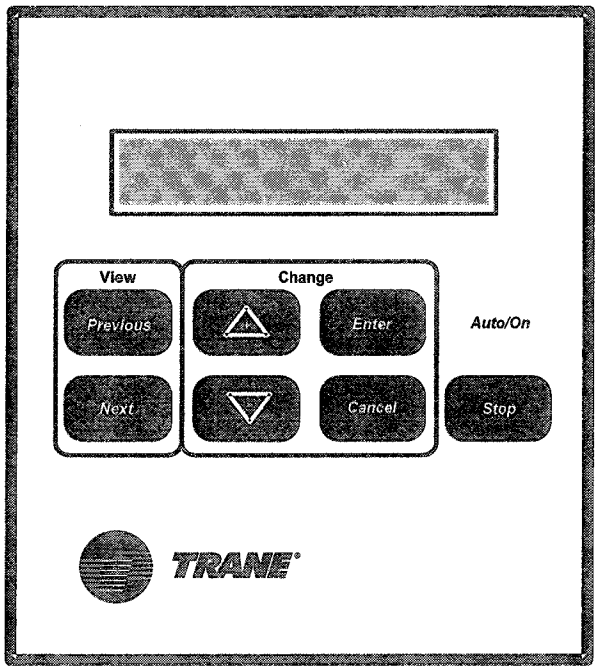

Menu Overview

The Monitor display uses a major menu structure with entry points into side menus. (See Figure 9 Menu Flow Schematic.) The <Next> and <Previous> keys are used to navigate vertically through the menus. The side menus are accessed by pressing the <Enter> key at the major menu point. If a side menu is not accessed (entered), only the major menus (those shown in the left column) will appear. After the side menu is accessed, the <Next> and <Previous> keys are used to navigate vertically through those screens. After paging through the entire side menu, the display loops back to the major menu.

A brief description and range information for each menu item is given in Figure 10.

Figure 9
Menu Flow Schematic

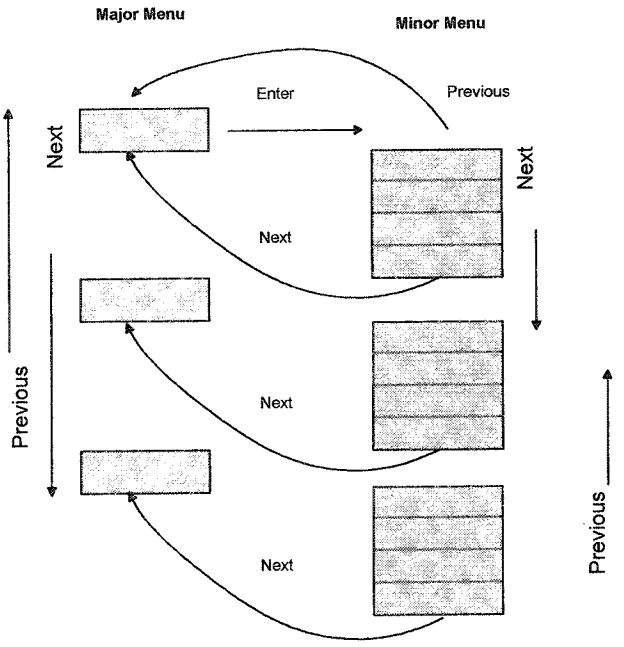

Figure 10—Refrigerant Monitor Menu Screens

Major Menu	Side Menus	Description
READY XXXX ppm R-XXX		Refrigerant Monitor operating mode [WARMUP, READY, MONITOR CHECK, TROUBLE] (Single Channel Unit Only)
CHAN X READY XXXX ppm R-XXX		Refrigerant Monitor operating mode [WARMUP, READY, MONITOR CHECK, TROUBLE] (Channel Scanner Unit Only)
1 STATUS Report < Enter> to View		Entry point into the SAMPLE Report
	Current Sample = XXXX ppm R-XXX	The current refrigerant sample point. (Displayed if channel scanner is not installed)
	Current Chan X = XXXX ppm R-XXX	The current refrigerant sample point. (Displayed if channel scanner is installed)
	Last Channel 1 = XXXX ppm R-XXX	The last value read from Sample Point #1. (Displayed if channel scanner is installed)
	Last Channel 2 = XXXX ppm R-XXX	The last value read from Sample Point #2. (Displayed if channel scanner is installed)
	Last Channel 3 = XXXX ppm R-XXX	The last value read from Sample Point #3. (Displayed if channel scanner is installed)
	Last Channel 4 = XXXX ppm R-XXX	The last value read from Sample Point #4. (Displayed if channel scanner is installed)
	Case Temp= XX.X C Bench Temp= XX.X C	The temperature of the Refrigerant Monitor's Case. The temperature of the Refrigerant Monitor's Optical Bench
	Auxiliary Input = XX.X mA	The current auxiliary mA signal being sent to the monitor. (Displayed if auxiliary input is installed.)
	Clear Lang Dspl Software Ver XXX	The current software version of the Refrigerant Monitor Clear Language Display.
	Rfgt Monitor Software Ver XXX	The current software version of the Refrigerant Monitor.
2 SETTINGS Reprt < Enter> to View		Entry point into the SETTINGS Report
	Alarm Level 1 = XXXX ppm R-XXX	The minimum refrigerant concentration necessary to trigger a Level 1 Refrigerant Alarm (press + to increment, - to decrement) **XXXX ppm** *
	Alarm Level 2 = XXXX ppm R-XXX	The minimum refrigerant concentration necessary to trigger a Level 2 Refrigerant Alarm (press + to increment, - to decrement) **XXXX ppm** *
	Alarm Level 3 = XXXX ppm R-XXX	The minimum refrigerant concentration necessary to trigger a Level 3 Refrigerant Alarm (press + to increment, - to decrement) **XXXX ppm** *
	** Audible Alarm For Rfgt = XXXXX	The refrigerant alarm level which causes the optional Audible Alarm to sound [Off, Alarm1, Alarm2, **Alarm3**]
	** Audible Alarm For Trouble = XXX	Select the optional Audible Alarm to sound for a Trouble condition [**Off**, On]
	Alarm Level 1 = XXXXX	Alarm Level 1 relay configuration [Latching, **Non-Latching**]
	Alarm Level 2 = XXXXX	Alarm Level 2 relay configuration [Latching, **Non-Latching**]
	Alarm Level 3 = XXXXX	Alarm Level 3 relay configuration [Latching, **Non-Latching**]
	Channel Scanner = XXXXX	Select the multi-channel scanner [**Installed**, **Not Installed**] **Default dependent on scanner installation** (only displayed during "Warm-up")
	Scanner Chan 1 = XXXXX	Select Channel 1 Status [**Active**, Inactive] (Displayed if channel scanner is Installed)
	Scanner Chan 2 = XXXXX	Select Channel 2 Status [Active, **Inactive**] (Displayed if channel scanner is Installed)
	Scanner Chan 3 = XXXXX	Select Channel 3 Status [Active, **Inactive**] (Displayed if channel scanner is Installed)
	Scanner Chan 4 = XXXXX	Select Channel 4 Status [Active, **Inactive**] (Displayed if channel scanner is Installed)
	Dwell Threshold = XX %	Select the percentage of Alarm Level 1 necessary to dwell on a channel for an additional 60 seconds 30 - **70%** (Displayed if channel scanner is installed)
	Auxiliary Input = XXXXX	Select Auxiliary Input installation status [Installed, **Not Installed**]

Bold = Factory Default
* See Factory Default Value Chart in Settings Side Menu
** Added to second CLD software version

Figure 10—Refrigerant Monitor Menu Screens (Cont.)

Major Menu	Side Menus	Description
	Aux Input Alarm = XXXXX	Select Auxiliary Input alarm status [**Enabled,** Disabled] (Displayed if Auxiliary Input is Installed)
	Auxiliary Alarm Level = XX.X mA	Select the alarm condition level for the auxiliary input. (Displayed if Auxiliary Input is Installed)
	Aux Input Alarm Direction= XXXXX	The alarm direction for the auxiliary input. [**Below**, Above] (displayed if Auxiliary Input is Installed.)
	* * Audible Alarm For Aux = XXXXX	Select the optional Audible Alarm to sound for an Auxiliary Input Alarm condition [**Off**, On] (Displayed if auxiliary input is installed)
	Analog Output Range 0-1000 ppm	Refrigerant Monitor Analog Output range [0-100ppm, **0-1000ppm**], 0-10VDC & 4-20mA scaling factor.
3 Calibration < Enter> to Cal		Entry point to CALIBRATION report
Enter Password XXXX		Enter 6 digit password "– + – – + + "; Monitor mode changes to Monitor Check.
Chan X Mon Check XXXX ppm R-XXX		Displays current refrigerant concentration. Alarms disabled.
Refrigerant Zero < Enter> to Cal		Entry point to Refrigerant Zero Calibration routine.
	Starting Cal Please Wait	Monitor module preparing for Zero calibration. If scanner is installed, locks onto Channel 1.
	Connect Zero Gas < Next> to Continue	Connect Zero gas canister or Scrubber filter to sample inlet. (Channel 1 if scanner is installed.)
	Open Valve < Next> to Continue	Open Zero gas canister regulator if used
	XXXX ppm R-XXX < Enter> to Adj	Refrigerant Zero concentration sensed.
	Locking Reading Please wait	Locks current reading.
	Refrigerant Zero XXXX ppm R-XXX	Press (+) increase reading or (-) to decrease displayed value to Zero.
	Starting Cal Please Wait	Monitor module preparing for Zero callibaration.
	Successful Calibration	New Zero calibration values accepted.
	Cal Failed < Enter> to retry	Monitor unable to accept new zero value. Reverts back to previous Zero value.
Refrigerant Span < Enter> to CAL		Entry point to Refrigerant Span Calibration routine.
	Starting Cal Please Wait	Monitor module preparing for calibration. If scanner is installed, locks onto Channel 1.
	Connect Span Gas < Next> to Continue	Connect Span gas canister to Sample inlet (Channel 1 if scanner is installed)
	Open Valve < Next> to Continue	Open Span gas canister regulator.
	XXXX ppm R-XXX < Enter> to Adj	Actual Refrigerant Span concentration sensed.
	Locking Reading Please wait	Locks current reading.
	Refrigerant Span XXXX ppm R-XXX	Press (+) increase reading or (-) to decrease displayed Span value.
	Starting Cal Please Wait	Monitor is adjusting calibration values.
	Successful Calibration	New Span calibration values accepted.
	Cal Failed < Enter> to retry	Monitor unable to accept new Span value. Reverts back to previous Span calibration value.
Press < Enter> to exit Cal		Exit Calibration Menu

Bold = Factory Default
* See Factory Default Value Chart in Settings Side Menu
** Added to second CLD software version

Operation

Operating Modes



Modes of operation are:

Warm-up: The warm-up mode will be displayed upon power up of the monitor. It will remain in this mode until the photo-acoustic sensing cell is up to operating temperature. Typically warm-up time is 20-30 minutes

Ready: This is the normal operating mode of the unit.

Monitor Check: This mode is displayed whenever the "Calibration" major menu is accessed or a "Settings" menu item is changed.

Trouble: The unit will go into the trouble mode whenever internal unit malfunction is sensed. Outputs during the "Trouble" mode are unreliable.

Current Refrigerant Concentration



The currently sensed concentration of refrigerant and the type of refrigerant for which the unit is currently calibrated is displayed.

Alarm Status



If an alarm is active, the backlight on the display will flash. If the alarm is due to the refrigerant concentration exceeding the preset alarm point, an alarm message will be alternately displayed with the current ppm reading and alarm status.

The refrigerant alarm messages that may be displayed are:

Rfgt. Level 1: The sensed refrigerant concentration is above the Alarm Level 1 setting.

Rfgt Level 2: The sensed refrigerant concentration is above the Alarm Level 2 setting.

Rfgt Level 3: The sensed refrigerant concentration is above the Alarm Level 3 setting.

Aux Input Alarm: The auxiliary input current is above/below the Auxiliary Alarm setting.

Trouble Status

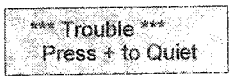

This screen will alternate with the diagnostic message. If the problem is due to unit "Trouble" (malfunction), the trouble message and the diagnostic will be displayed. The diagnostic alarm messages that may be displayed are:

Communication Lost With Module: The clear language display is not communicating with the monitor module.

RAM Loss: The monitor module has lost the data in its battery backed RAM.

IR Source Fail: The infrared optical source has failed.

Chopper Fail: The optical bench photo interrupter has failed.

Temp Sensor Fail: The bench temperature sensor has failed.

Bench Flow Loss: Air flow loss to the optical bench. Allow two minutes to reset on units with channel scanner.

Scan Flow Loss: Air flow loss to the channel scanner.

Out of Temp Rng: The refrigerant monitor is out of the temp range where it can measure refrigerant.

Rfgt Lvl to Low: The displayed refrigerant level is less than - 4 ppm.

Rfgt Mon Fail: An undefined trouble diagnostic from the refrigerant monitor.

Aux Input Fail: Auxiliary input is less than 4 mA or greater than 20 mA with the aux input installed.

Ext Reset Fail: The external reset switch has failed or the jumper is missing.

Note: See the "Troubleshooting" section for more discussion of service diagnostics.

STATUS Side Menu

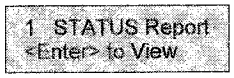



Current Sample: The current refrigerant concentration will be displayed. This screen will only be displayed if the Channel Scanner is "Not Installed".

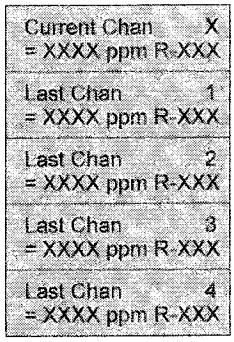

Current Channel X: The current refrigerant concentration and the channel being sampled is displayed. This screen will only appear if the Channel Scanner is "Installed".

Last Channel 1 through 4: The value that was displayed the last time that channel was read. These screens will only appear if the Channel Scanner is "Installed".



Case Temp. : The internal case temperature (C).

Bench Temp.: The internal temperature of the photo-acoustic bench (C).

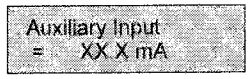

Auxiliary Input: Displays the mA current being measured at the auxiliary input. This screen is displayed only if the Auxiliary Input is "Installed".

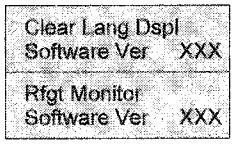

Clear Language Display Software Version: The software version of the clear language display.

Rfgt Monitor Software Version: The software version of the monitor module.



Entry point into the SETTINGS Side Menu.

SETTINGS Side Menu

Note: Press <Enter> to save settings, <Cancel> to cancel changes and revert back to previous values.

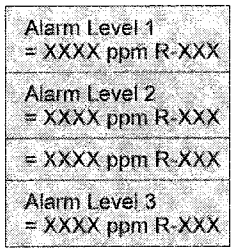

Alarm Levels 1, 2 and 3 XXXX ppm: The ppm level at which a concentration alarm will be displayed and the appropriate alarm relay activated. Press (+) to increase setting, (-) to decrease setting. (See "Alarm Level Settings" for allowable range of settings).

Factory default values are:

Refrigerant	Level 1	Level 2	Level 3
HCFC-123	50	150	500
CFC-11, HCFC-22, HFC-134a, CFC-12, CFC-113, CFC-114, CFC-500, CFC-502	50	150	1000
Ammonia	10	25	50

Note: These are the current recommended alarm level values at the time of printing. They can be easily adjusted as required.

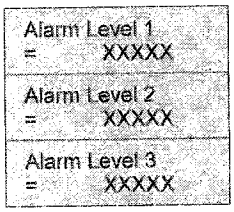

Alarm Level 1, 2 and 3 Relay Configuration: The three alarm relays can be configured individually to "latch" or "unlatch" when the alarm level is exceeded. With "unlatched" alarms, the unit will automatically reset the alarm status, de-energize the alarm relay(s) and revert to normal operation when the refrigerant concentration falls below the preset alarm level. "Latched" alarms will stay activated until acknowledged (reset) by pressing the <+> key on the keypad while viewing the alarm. If the alarm condition remains, the alarm will immediately re-latch. If the alarm condition was cleared, the alarm will clear in about five seconds. Options are "Latched" and "Unlatched". Factory default is "Unlatched". Press (+) to change setting.

Note: Allow 15 seconds after "Installing" scanner before attempting to view channel settings and dwell threshold.

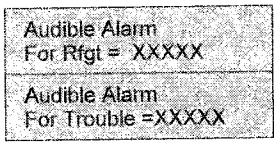

Audible Alarm For Refrigerant: * The audible alarm is a separate option that is field installed. If this option is ordered, it can be set to sound on alarm level 1, 2 or 3 or left off. The factory default is "Alarm 3". Press (+) to change setting.

Audible Alarm for Trouble: * If the optional Audible Alarm is ordered, it can be set to sound if a "TROUBLE" (malfunction) diagnostic is displayed. Once the alarm clears, the horn is silenced. The factory default is "OFF", but can be changed to "ON" by pressing (+).

*Added to second CLD software version.

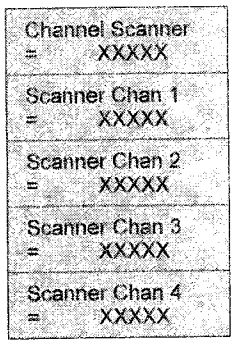

Channel Scanner : This setting can only be changed during the "Warm-up" mode. It determines if the scanner set-up screens are displayed. Options are "Installed" and "Not Installed". Press (+) to change setting. If scanner option is provided, the Factory default is "Installed" and Channel 1 = "Active" and Channels 2,3 and 4 = "Inactive".

Scanner Chan 1 through 4 : This setting is used to individually activate or deactivate the scanner channels. A minimum of one channel must be active at all times. Press (+) to change status. These screens are only displayed if the Channel Scanner is "Installed" in the previous screen.

Note: The monitor will not allow all channels to be deactivated. Deactivating a channel while it is being scanned may cause a "Flow Loss" diagnostic, however the alarm should clear after approximately two minutes.



Dwell Threshold : This setting selects the percentage of an Alarm Level 1 concentration which will result in a 60 second extended sample time on the channel. Range is 30 to 70%. Press (+) to increase, (-) to decrease setting. Factory default is 70%. This screen is only displayed if the channel scanner is "Installed".

Operation

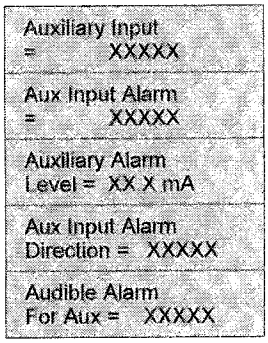

Auxiliary Input: This item selects whether a 4-20 mA auxiliary input is being used. Options are "Installed" and "Not Installed". Press (+) to change settings. Factory default is "Not Installed". (See "Auxiliary Input" section of this manual for more information.

Aux Input Alarm: This input determines if the Auxiliary Input will activate alarms on the monitor. Options are "Enabled" and "Disabled". If the alarm is enabled, the auxiliary input will alarm through the unit Level 3 alarm relay. If "Disabled" no alarms will be activated. Press (+) to change setting. This screen is displayed only if the Auxiliary Input is "Installed". (See "Auxiliary Input" section of this manual for more information.)

Auxiliary Alarm Level: Used to set the mA level from the auxiliary device which will result in a Level 3 alarm if the Auxiliary Alarm was enabled on the previous screen. This screen is displayed only if the Auxiliary Input is "Installed". (See "Auxiliary Input" section of this manual for more information).

Aux Input Alarm Direction: This setting determines if the Auxiliary Input Alarm is activated above or below the alarm mA setpoint.

Audible Alarm for Aux: * Used to set the optional audible alarm to sound if an auxiliary input is in alarm. Options are "ON" or "OFF". Press (+) to change setting. The factory default is "OFF".

*Added to second CLD software version.

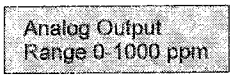

Analog Output Range: Used to set the range for the 4-20 mA current output and the 2-10v voltage output scaling factor. Press (+) to change the setting. The factory default is "0-1000 ppm".

CALIBRATION Side Menu

Note: For a step-by-step calibration procedure, refer to the "Calibration " section of this manual.



The entry point into the Calibration Side Menu.

Note: If unit "Trouble" is detected during calibration, a "trouble" diagnostic will be displayed and the display will go back to the main menu "Trouble" screen.



The field calibration password " – +– – ++" must be entered to proceed with calibration. Press <Enter> to proceed. Press <Previous> to back out of the calibration routine.

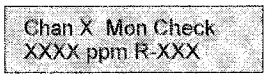

Current refrigerant concentration is displayed. Alarms are held. Wait approximately 5 seconds until mode changes from "Ready" to "Mon Check".

Note: There are two major side menus under Calibration, Refrigerant Zero and Refrigerant Span.

REFRIGERANT ZERO Side Menu

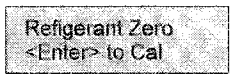

The entry point into the Refrigerant Zero Side Menu. This is used to verify the monitor Zero setting.



The "Starting Cal" screen is displayed for approximately 20 seconds while the module prepares for re-calibration. If unit has a 4 channel scanner, it will be locked on channel 1.



The "Unable to Cal" is displayed if the module will not accept recalibration data. (See Troubleshooting section of this manual.) Display reverts back to "Refrigerant Zero" Major Menu.

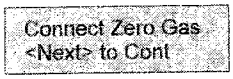

Directs the user to connect the Zero gas canister or the zero scrubber to the monitor sample port. Press <Next> to continue.



If a Zero gas canister is used, open regulator valve to begin gas flow. If using a Zero scrubber filter, disregard this step and press <Next>.

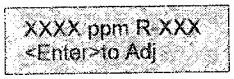

This screen displays the measured concentration based on the current instrument calibration.

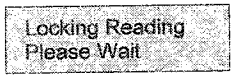

Locks on to current reading and prepares for re-calibration.

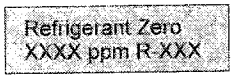

At this point the displayed zero can be adjusted to zero using the (+) and (-) keys. Press <Enter> when finished.

Note: Pressing <Cancel>at any point prior to this will abort calibration routine and the unit will revert back to previous calibration.

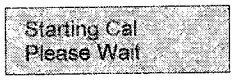

These screens display when the new values are being transmitted and stored in the monitor (approximately 20 seconds).

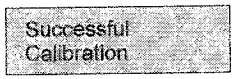

The "Successful Calibration" verifies that the new values were accepted and are now being used.

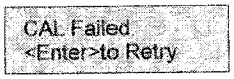

This screen appears if the new zero calibration values are outside the adjustment limits or the <Cancel> key has been pushed. Press <Enter> to retry or <Cancel> to revert back to previous values.

REFRIGERANT SPAN Side Menu

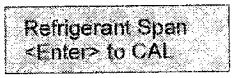

The entry point into the Refrigerant Span Side Menu.

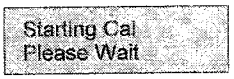

The "Starting Cal" screen is displayed for approximately 20 seconds while the monitor prepares for re-calibration.

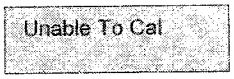

The "Unable to Cal" is displayed if the module will not accept recalibration data. (See the Trouble shooting section of this manual for possible causes.)

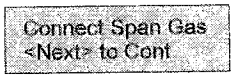

Directs the operator to connect the Refrigerant Span gas canister to the sample port.

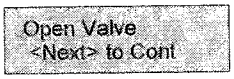

Instructs operator to open span gas regulator to allow gas to flow to instrument.

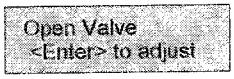

Displays the measured concentration based on current instrument calibration. Press <Enter>if reading does not match span gas concentration shown on outside of canister. If reading matches span gas concentration, press <Cancel> to abort calibration routine.

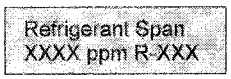

At this point the operator can increment (+) or decrement (-) the displayed value to the correct concentration as noted on the calibration gas canister. Press <Enter> when finished.



Displayed while monitor is being updated.

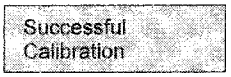

The "Successful Calibration" verifies that the new values were accepted and are now being used.

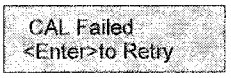

This screen appears if the new span calibration values are outside the adjustment limits or the <Cancel>key has been pushed. Press <Enter> to retry or <Cancel> to revert back to previous values.

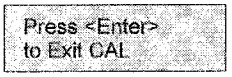

After completing calibration, press <Next> key until above screen is displayed. Press <Enter> to exit calibration menu.

Remote Alarm Reset

Latched refrigerant alarms can be acknowledged (Reset) locally by pressing the <+> key on the clear language display while viewing the alarm message.

Latched refrigerant level alarms can also be remotely reset through a momentary contact opening.

This capability can be used to determine if an alarm condition has cleared or still exists. If the refrigerant concentration is below the preset alarm ppm point, the alarm will reset and will not re-latch. If the concentration is above the alarm ppm point, the alarm will immediately re-latch.

The monitor ships with a jumper between terminals 1 and 2 of J16 on the monitor module. This jumper is removed and replaced with a normally closed switch if the remote reset feature is used.

To remotely reset an alarm, apply a momentary contact opening to terminals 1 (RST+) and 2 (RST-) on the J16 terminal strip. A switch with signal-level contacts, typically gold flashed, must be used. The maximum distance from the reset switch to the monitor using 18 AWG shielded wire is 300 feet.

Audible Alarm Output

A 12 VDC output from the module is provided as standard to power a piezo-electric audible alarm horn (150 mA non-inductive max. load). The audible horn is a field-installed option. A plugged hole is provided on the bottom of the monitor enclosure to mount the optional horn. The horn is connected to terminals 6 (+12V) and 7 (SPKR) on terminal block J17 of the module. The Audible Alarm Kit includes the required gasketing to retain the NEMA-4 enclosure rating.

The audible horn will sound whenever the selected Level 1, 2 or 3 alarm is active. The alarm configuration "Latched" or "Unlatched" will be the same as what has been set for the selected Level 1, 2 or 3 alarm. Pressing <+> from the "Alarm" screen will acknowledge a latched alarm and silence the audible alarm. The audible alarm is then reset when the refrigerant concentration falls below the preset alarm point.

The audible alarm can also be configured to sound if the monitor is displaying a TROUBLE (malfunction) diagnostic. If the audible alarm is active, it can be silenced by pressing <+> from the trouble screen or when the diagnostic clears.

Auxiliary Input

The module is capable of accepting an auxiliary 4-20 mA input from another source. This feature could be used to tie in a device such as a an oxygen monitor so it could alarm through the refrigerant monitor alarm system. Specifically, when the mA output from the auxiliary device is above/below the Auxiliary Alarm level setting, the Level 3 alarm relay on the monitor module will change state. When the auxiliary input option is used, the Level 3 alarm will activate when either the refrigerant concentration exceeds the Level 3 Alarm setting or the preset Auxiliary Input mA value is exceeded.

Figure 11
Auxiliary Alarm Example

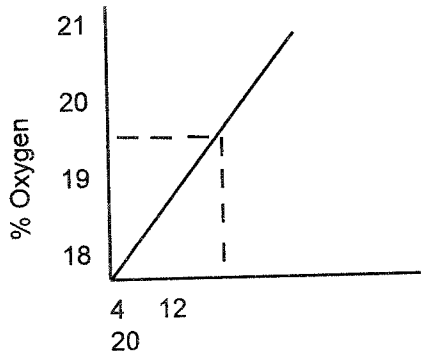

Depending on the device used, it may be necessary to alarm when the input mA value is below the alarm steeping while other devices need to alarm above the alarm point. An example of alarming when the input falls below the level might be an oxygen monitor where the output is proportional to the % oxygen. As the available oxygen drops, so does the mA input. By contrast, a refrigerant monitor input that increases with concentration would need to be set up to alarm when the mA input goes above the setting.

The auxiliary input is enabled and the other set-up parameters are set-up through software in the "Settings" menu.

The optional audible alarm can be configured to sound if the auxiliary input exceeds the auxiliary alarm level. The horn can be silenced by pressing <+> from the alarm screen or when the auxiliary alarm input drops below the auxiliary alarm level.

To properly determine the auxiliary device alarm point, the scaling in relation to the 4-20 mA range of the device must be known. The chart below shows an example of an oxygen monitor in which an alarm was desired at 19.5% sensed oxygen level.

In the previous example, the "Auxiliary Alarm Level" would be set at 12.0 mA and the "Aux Alarm Direction" would be set to "Below".

Operation

Monitor Cross-Sensitivity

The Trane Refrigerant Monitor is factory calibrated specifically for the refrigerant of interest. With the large number of different chemicals and refrigerants in equipment rooms, it is very important that an air monitoring device be as resistant to cross-sensitivity as possible. The photo-acoustic technology used in this instrument is one of the most selective available; however, the instrument may respond, in varying degrees, to other chemicals that may be in the monitored area. Listed below are the instrument's sensitivity to 100 ppm of other commonly used refrigerants when calibrated for the specific refrigerant listed. These are typical values for reference only.

Example: A monitor calibrated for HCFC-123 will display 4 ppm when exposed to 100 ppm of HCFC-22.

Calibrated for HCFC-123

Refrigerant	Response
CFC-11	<1 PPM
HFC-134a	140 PPM
HCFC-22	4 PPM
CFC-113	80 PPM

Calibrated for CFC-11

Refrigerant	Reposnse
HCFC-123	3 PPM
HFC-134a	20 PPM
HCFC-22	30 PPM
CFC-113	25 PPM

Calibrated for HCFC-22

Refrigerant	Response
HFC-134a	25 PPM
CFC-11	16 PPM
HCFC-123	35 PPM
CFC-113	39 PPM

Calibrated for HFC-134a

Refrigerant	Response
HCFC-22	1 PPM
HCFC-123	8 PPM
CFC-11	2 PPM
CFC-113	17 PPM

Due to the large number of possible interferants other than refrigerants, it is impractical to list them. Direct any questions regarding specific interferants that are expected to be in the monitored area to your local Trane office.

Note: Cross-sensitivity data not verified during UL testing.

Calibration

Introduction

The monitor is factory calibrated for the specific refrigerant desired however, it is recommended that the calibration be checked regularly, at a minimum annually, and a log kept detailing any adjustments required. This Installation, Operation and Maintenance manual should be referenced to assist in operating the display and identifying components or connection points.

Material Required

1. Trane™ Calibration Kit containing:

- Zero Gas Scrubber
- Flow Regulator
- Interconnecting Tubing and Fittings
- Span Gas Scrubber
- Carrying Case

2. A canister of the specific refrigerant span gas is required.

This calibration check should be performed only by qualified personnel familiar with the instrument and its operation.

⚠ Warning!
During calibration, the monitor is not in service and any alarm conditions that may occur during the calibration sequence will not be recognized, possibly resulting in serious personal injury or death.

Preparing for Calibration

1. Ensure the area surrounding the monitor is free from any gas hazard. Operate permanent or portable ventilation as necessary.
2. Unit should be operating for at least 2 hours before a calibration check is attempted.
3. Access the calibration menu using the display located on the unit front panel.
4. Page through the display by pressing <Next> until you get to the "Calibration" main menu. Press <Enter> to begin calibration check routine.
5. Enter the Field Calibration password, " - + - - + + ". Press <Previous> if you wish to back out of the calibration routine.
6. The monitor will go into the Monitor Check Mode after 5 seconds and the refrigerant concentration based on the current unit calibration will be displayed. All new alarms will not be recognized.
7. Remove the gas sampling tube from the monitor sample inlet. Disconnect sample channel #1 if a scanner is installed.

Zero Calibration Check

1. The first routine is used to check the unit Zero calibration. Press <Next> to proceed to the Refrigerant Zero screen. Press <Enter> to begin Zero Calibration. The display will read "Starting Cal, Please Wait". If a channel scanner is installed, it will be locked onto channel #1. Refer to Figure 12 for connection information.

Note: Either a Zero Gas Scrubber or a canister of Zero gas can be used to check the zero setting on a Model RMWD monitor.

2. When the "Connect Zero Gas" screen is displayed, connect the Zero Scrubber or the Zero Gas Canister to the sample port on the monitor as shown

2. (Continued) in Figure 12. Use sample port #1 if a scanner is installed. Press <Next> to continue.

⚠ Caution:
Be sure Zero Scrubber is used and not Span Gas Scrubber.

Note: If a Zero Gas canister is used, connect as shown in Figure 13 except substitute Zero canister for Span Gas canister. The tee and a scrubber must be used whenever compressed gas is applied to the unit to avoid over pressurization of the pump circuit.

3. "Open Valve" will be displayed. If the Zero gas canister is used, open the regulator to allow gas to flow. If a scrubber is being used, disregard this step. Press <Next> to continue to Step 4.
4. The next screen will display the sample concentration based on the current unit calibration. After waiting at least three minutes, press <Enter> to adjust zero setting. If reading is zero, press <Cancel> twice to exit Zero calibration routine and move to Refrigerant Span routine.
5. If <Enter> was pressed to adjust, the unit will lock onto the reading. Use the (+) and (-) keys to adjust displayed reading to zero. Press <Enter> when finished. Monitor will now store the new Zero setting.
6. Either "Successful Calibration" or "Cal Failed" will be displayed. If calibration was successful, the display will proceed to the Span Calibration. If calibration failed, the unit will revert back to the previous zero value. Press <Enter> to repeat Zero Calibration. Shut off Zero Gas flow if canister is being used.

Note: If Calibration continues to fail, refer to the "Troubleshooting" section in this manual.

Refrigerant Span Calibration Check

1. At the "Refrigerant Span" screen, press <Enter> to Calibrate. The display will read "Starting Cal Please Wait". Refer to Figure 13 for connection information.
2. Connect the Span Gas canister to Sample Port #1 when the display prompts you to do so. Also, remove any caps on the span gas scrubber. Press <Next> to continue.
3. Open the regulator valve when instructed and press <Next> to continue.
4. After at least three minutes and the displayed value is stable, compare the displayed PPM value to what is listed on the calibration span gas canister. If the displayed value matches the span gas concentration, press <Cancel> twice to exit calibration mode. If the displayed value differs from the value on the canister, press (+) or (-) to change the displayed value to match the calibration gas value. Press <Enter> to continue. The display will read "Starting Cal".

Calibration

5. Either "Successful Calibration" or "Cal Failed" will be displayed. If the calibration was successful, the new span values have been stored and will be used for all future readings. Press <Next> three times, then <Enter> to return the instrument to operation. If the Calibration failed, the monitor will revert back to the values previously stored. Press <Enter> to retry span calibration.

Note: If Calibration continues to fail, refer to the "Troubleshooting" section of this manual or consult the factory.

6. Disconnect the span gas canister, connect all sample lines that may have been removed and exit calibration routine. Unit is ready to be put back into service.
7. Log the date and note any adjustments made on a monitor calibration log.
8. Return all parts to the Calibration Kit carrying case.

Figure 12
Zero Calibration Check Connections

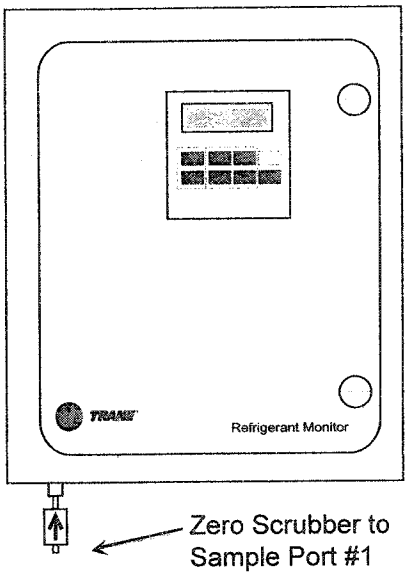

Figure 13
Calibration Check Connections Connections

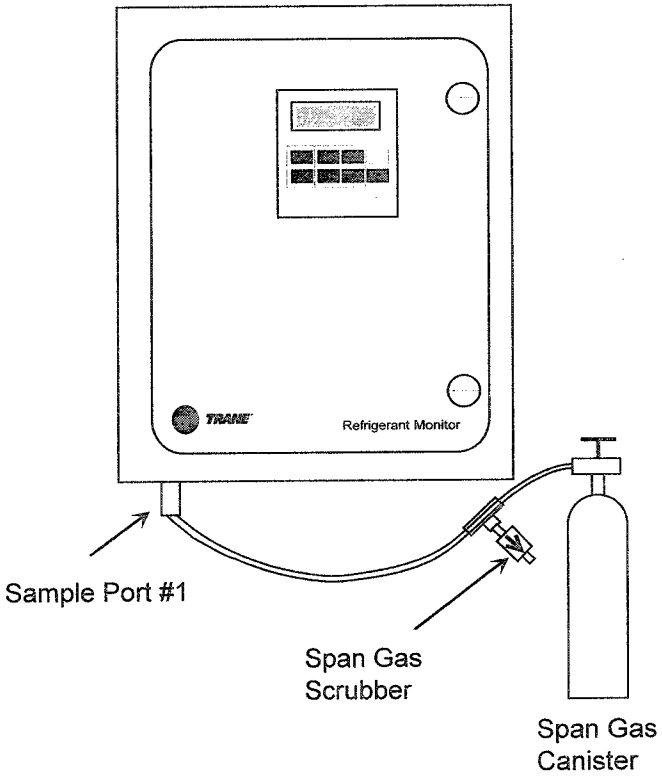

Note: If Zero Gas is used, connect canister to Sample Port #1 using connect arrangement similar to what is shown in Figure 13, substituting the Zero canister for the Span Canister and the Zero Scrubber for Span Gas Scrubber.

Troubleshooting

Diagnostic	Possible Cause
Communication lost with module	Wires to module shorted, open, or reversed.
RAM loss	Loss of battery backed up RAM
IR source failure	Wire from IR source broken or disconnected
	Burned out IR source
Chopper failure	Motor failure
	Wire unplugged
	Photo pick up failure or unplugged
	Chopper physically obstructed
	Defective circuit board assembly
Temperature sensor failure	IR bench temperature sensor unplugged or failed
Bench flow loss *	Filter, tubing, sample line clogged, kinked or collapsed
	Optical bench pump failure
	Pressure switch failure or unplugged
	Pressure switch incorrectly connected to printed circuit board
	Exhaust line blocked
	Optical bench pump failure
Scanner flow loss	Filter, tubing, sample line clogged, kinked or collapsed
	Scanner pump failure
	Pressure switch failure or unplugged
	Exhaust line blocked
	Scanner pump failure
	Improper connection of scanner
Out of temperature range	Ambient temperature too low
	Optical bench heater malfunctioned or unplugged
	Temperature sensor failure or unplugged
	Heater unplugged or failure
	The transistor that controls the heater has failed
Refrigerant level too low	Monitor out of calibration
Refrigerant monitor failure	Any other trouble than listed diagnostic
Auxiliary input failure	Input is out of range, above 20 mA or below 4 mA
	Check wiring to auxiliary input connector
	Check output of 4-20 input device
	Input is installed but no device is connected
External reset failure	No external reset switch installed and jumper removed
	Jumper on connector has been grounded
	Check wiring to normally closed switch
	Check switch operation
	Operator depressing switch too long (60 seconds +)

* Note: 4 Channel Scanner Units—A bench flow loss diagnostic appears if any sample inlet is plugged when power is initially applied to the unit or after a power loss. Each sample inlet, even if unused during normal operation, must have a filter installed to avoid nuisance faults.

Instrument Flow Diagram

Mechanical

Figure 14
Single Channel Model

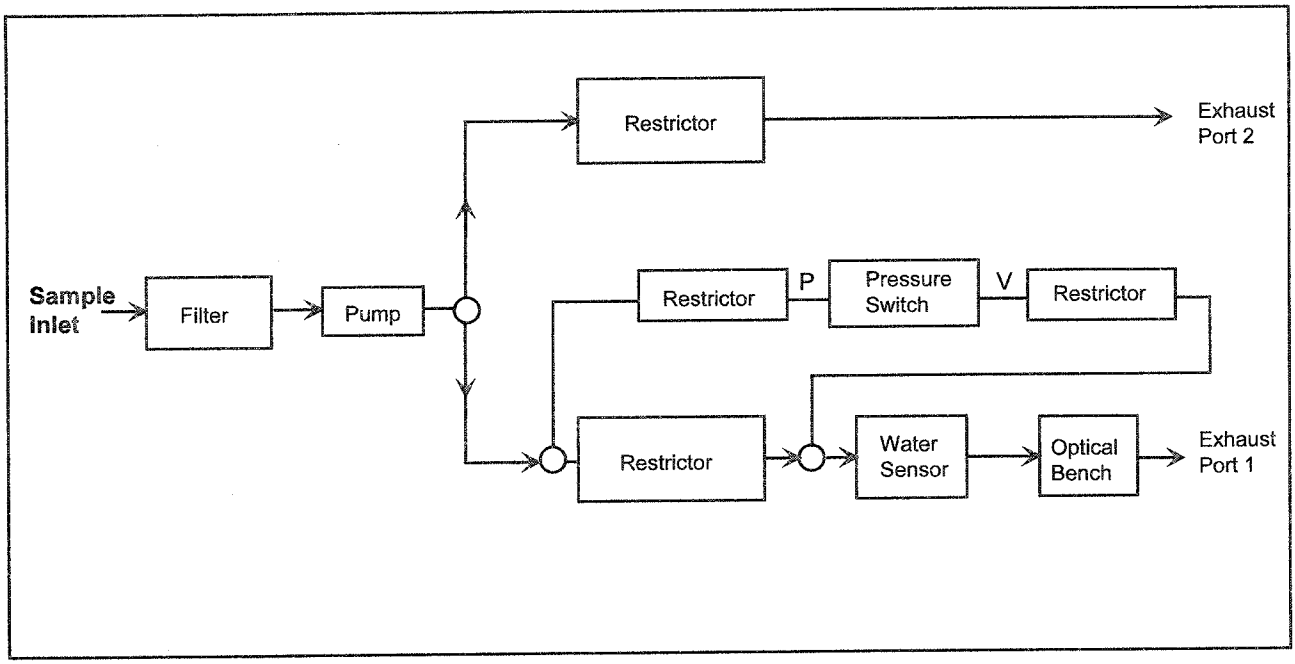

Figure 15
Unit with 4 Channel Scanner

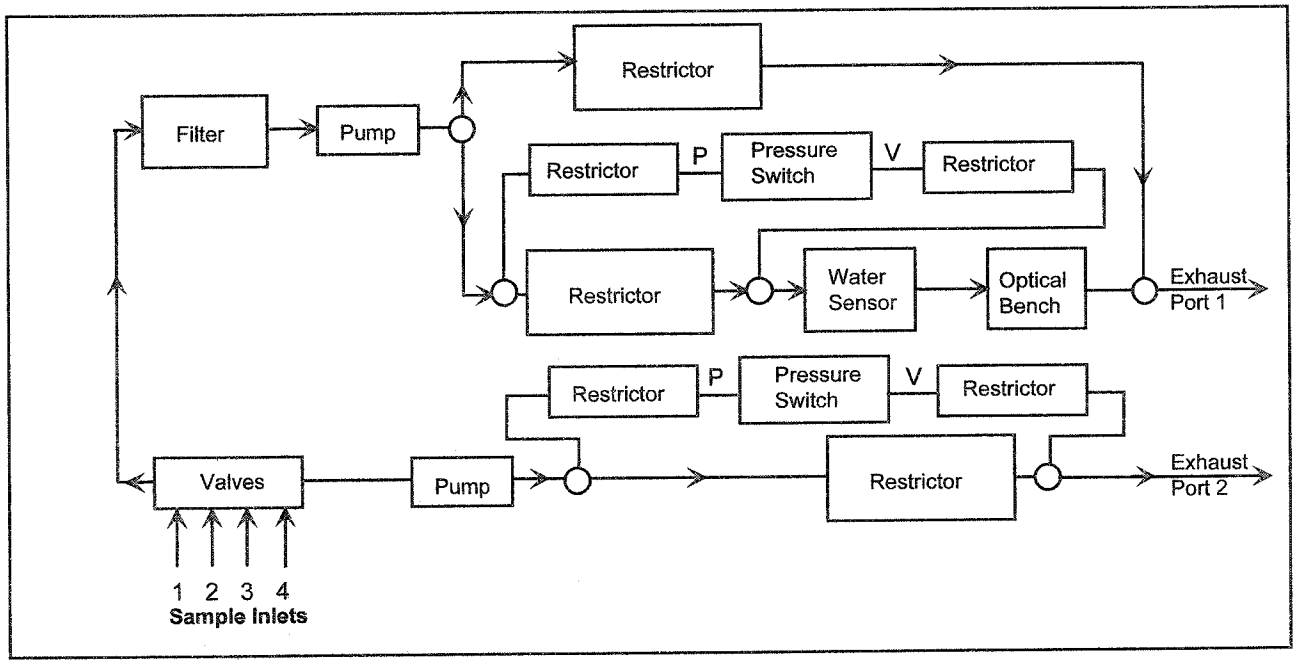

Enclosure

Technical Specifications

Mechanical

Enclosure

NEMA-4 rated. Hinged door with 2 quarter-turn latches. Beige with black face plate.

Mounting

4 mounting tabs provided on back of enclosure.

Weight

Single channel unit = 42 lbs. operating, 45 lbs. shipping.
4-channel scanner unit= 45 lbs. operating, 49 lbs. shipping.

Sample Pumping Rate

0.75 LPM minimum with 150 feet of 1/8" ID sample tubing.

Electrical

Inputs

Power Input - The refrigerant monitor will operate from a source of AC power of 100 VAC to 240 VAC, 50 to 60 Hz. Power input not to exceed 80 watts in single channel operation.

Auxiliary Input - 4 to 20 mA Input referenced to ground. Input impedance is 200 (±4) Ω resistive.

Remote Reset - An input will be provided to remotely reset latched alarm relay(s). On activation, all latched alarms will be reset. Maximum distance from monitor to contacts is 300 feet using shielded 18 AWG twisted pair wire.

Outputs

Analog - Two analog outputs are provided to indicate refrigerant gas concentration. These outputs may be used independently and simultaneously.

Ranging for both outputs is common.

Ranges selectable by software:
0 to 100 PPM
0 to 1000 PPM

The resolution on each range is 1 PPM.

4 to 20 mA: Sourcing current to module ground. Load = 200 ohms maximum.

0 to 10 VDC: Sourcing referenced to module ground. Output current to 7 mA maximum.

Relays - Relay contact ratings are as follows:

Resistive load:
-7.2 Amps @120 VAC
-5.0 Amps @240 VAC

Inductive load:
-2.88 Amps Pilot Duty
-1/3 HP, 7.2 FLA, 43.2 LRA

Audible alarm output:
12 VDC, 100Ω load maximum

Gas Sensing Characteristics

Gas Sensitivity

Standard factory calibration for HCFC-123, CFC-11, HCFC-22 and HFC-134a. Special factory calibrations for other refrigerants are available.

Alarm levels

Alarm levels are software adjustable in steps of 1 PPM over the following ranges:

Alarm Levels:

HCFC-123	Low Limit	High Limit
Alarm Level #1	3 PPM	Lowest of 50 PPM or Alarm Level #2 -1
Alarm Level #2	Alarm Level #1 + 1	Alarm Level #3 - 1
Alarm Level #3	Alarm Level #2 + 1	1000 PPM

All other refrigerants	Low Limit	High Limit
Alarm Level #1	3 PPM	Alarm Level #2 -1
Alarm Level #2	Alarm Level #1 + 1	Alarm Level #3 - 1
Alarm Level #3	Alarm Level #2 + 1	1000 PPM

Technical Specifications

Factory Default Values Are:

Accuracy Rating

Refrigerant	Level 1	Level 2	Level 3
HCFC-123	50	150	500
CFC-11, HCFC-22, HFC-134a, CFC-12, CFC-113, CFC-114, CFC-500, CFC-502	50	150	1000
Ammonia	10	25	50

Note: These are the current recommended alarm level values at the time of printing. They can be easily adjusted as required.

Precision - Accuracy depends upon both precision and calibration standard accuracy. For negligible effect, calibration standard inaccuracy must be less than 1/10 precision inaccuracy.

0- 50 PPM = ± 1 PPM

51-1000 PPM= ± 10% of reading

Reference Operating Conditions:
Ambient Temperature =
23 ± 10°C
Atmospheric Pressure =
28.5 ± 2 in. Hg
Relative Humidity = 50 ± 20%
Line Voltage = 120 VAC

Calibration Standards:
Reproducibility - The reproducibility over a 12 month period will be within ± 1 PPM In the range 0 - 50 PPM under reference operating conditions.

Response Time

90% of a step change in 75 second maximum (at analyzer input). There is an additional transport time of 30 seconds with 150 foot of 1/8" tubing at a flow of 0.75 LPM. Additional scanner dwell time = 30 seconds per point. If a reading is observed greater than the threshold value, the scanner will dwell at that point for an additional 60 seconds.

Repeatability

Zero stability due to ambient, ±1 PPM with a maximum temperature change of 2.78°C per hour.

Linearity

0 to 100 PPM: linear

100 to 1000 PPM: ± 2% of full scale reading

Noise immunity

± 1 PPM with a zero gas filter attached.

Warmup Time

2 hours maximum (20 minutes typical)

Environmental

Temperature range

Operating: 0°C - 50°C
Temperature effect within this range is ± 0.3% of reading per °C.

Non operating: -10 to 60°C

Humidity

Operating and non operating; 5 to 95% R.H. Non condensing, over the operating temperature range.

Pressure

Operating: 10.2 PSIA to 15.66 PSIA

Non operating:
2.17 PSIA to 15.66 PSIA

Agency Listing

This refrigerant monitor is listed under the UL 2075 performance standard. UL has also tested and verified the monitor to CSA standard C22.2 #205. The ammonia unit has not been investigated by UL and is not covered under this listing.

Troubleshooting/ Repair

RMWD-TSR-1

Library	Service Literature
Product Section	Commercial Aftermarket Products
Product	Refrigerant Monitor
Model	RMWD
Literature Type	Troubleshooting/Repair
Sequence	1
Date	May 1996
File No.	SV-CAP-RM-RMWD-TSR-1-596
Supersedes	New

Trane™ Refrigerant Monitor

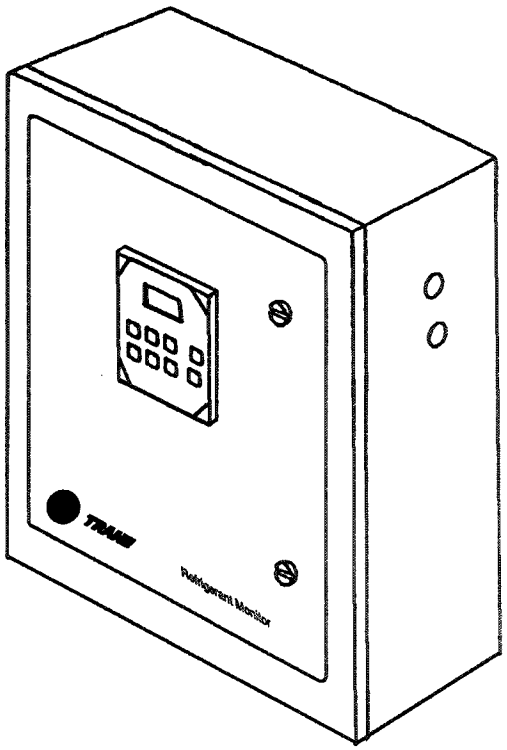

Since the American-Standard Company has a policy of continuous product improvement, it reserves the right to change specifications and design without notice. The installation and servicing of the equipment referred to in this booklet should be done by qualified, experienced technicians.

© American Standard Inc. 1996

Table of Contents

WARNING

This manual, including the warnings and cautions inside, must be carefully read and followed by all persons who use or maintain this product, including those who have any responsibility involving its selection, application, service or repair. This monitor will perform as designed only if used and maintained according to the instructions. Otherwise, it could fail to perform as designed and persons who rely on this product could sustain serious personal injury or death.

Page	Description
3	**Model Number**
4	**General Information**
4	Literature Change History
4	Introduction
4	Unit Description
5	Infrared Photoacoustics
6	RMWD Style Refrigerant Monitor
	- Monitor Installation
	- Wiring
	- Status LED's on main circuit board
	- Filters
12	Refrigerant Monitor / UCP2 Connections
12	Tracer Connections
12	Battery Backup
12	Run Test Monitor
13	Software Issues
13	Software Version 1.0
13	Software Version 2.0
13	Software Version 3.0
14	Monitor Cross-Sensitivity
16	Monitor Control
16	Clear Language Display (CLD)
16	R-12 "Undefined" Message
18	**Operation**
20	**Start-Up**
20	Start-Up Sequence
21	**Bench Flow Loss**
21	Single Point Units
22	Scanner Units
24	**Scan Flow Loss**
24	Scanner Unit
26	**Module Diagnostic Messages**
26	Communication Lost With Module
26	Trouble
27	RAM Loss
27	IR Source Fail
27	Chopper Fail
28	Temp Sensor Fail
28	Scan Flow Loss
29	Out of Temp Rng
29	Rfgt Lvl Too Low
29	Rfgt Mon Fail
29	Aux Input Fail
30	Bench Flow Loss
30	Ext Reset Fail
31	**Quick Problem Checks**
31	A. Bench Flow Loss
32	B. Refrigerant level too low
32	C. Refrigerant Conversion
32	D. Diagnostic Conditions
33	**Calibration Procedure**
33	Introduction
33	General Information
34	Material Required
34	Preparing for Calibration
34	Zero Calibration Check
35	Refrigerant Span Calibration Check
37	**Pressure Switch Checkout**
38	**Technical Specifications**
38	Mechanical
38	Electrical
38	Gas Sensing Characteristics
39	Environmental
39	Agency Listing

List of Figures

Page	Fig.	Description
5	1 -	Typical Infrared Photo-acoustic Setup
7	2 -	Typical RMWD monitor
8	2a -	View A, B, C for Figure 2
9	3 -	Remote Mounted Wiring
10	4 -	UCP2 Schematic Wiring for Clear Language Display, Stepper and Circuit
15	5 -	Typical Unit Mounted Refrigerant Monitor
16	6 -	RMWD Wiring for Controlling Two Devices from One Alarm Contact

List of Figures

Page	Fig.	Description
17	7 -	Typical Clear Language Display Wiring
23	8 -	Scanner Assembly
25	9 -	Instrument Flow Diagram
31	10 -	Measuring Bubble Activity
36	11 -	Zero Calibration Check Connections
36	12 -	Span Calibration Check Connections
37	13 -	Pressure Switch Testing Equipment
37	14 -	Pump Clearances

List of Tables

Page	Fig.	Description
21	1 -	Single Point Unit Start-Up Diagnostic Routine
22	2 -	Scanner Unit Start-Up Diagnostic Routine
32	3 -	Diagnostic Conditions

Model Number

Unit Model Number

For service and replacement purposes, the Trane Model RMWD Refrigerant Monitor is assigned a multiple-character alphanumeric model number that precisely identifies each unit. The model number key is shown here.

Use of the model number will enable the owner/operator, installing contractor, and service technician to define the characteristics of any RMWD unit. Be sure to refer to the model number when ordering replacement parts or requesting service.

Sample Model Number

Model No.	RM	W	D	120	0	A	A0
Digit No.	1, 2	3	4	5,6,7	8	9	10,11

Digits 1, 2
Product Description
RM = Refrigerant Monitor

Digit 3
Mounting Configuration
U = Unit Mount
W = Wall Mount

Digit 4
Development Sequence
D = 4th

Digit 5
1 = With Scanner
2 = Without Scanner

Digit 6
Human Interface
1 = With Clear Language Display
2 = Without Clear Language Display

Digits 7,8
0 = Not Used

Digit 9
Gas Analyzed

A = HCFC-123	G = CFC-114
B = CFC-11	H = CFC-500
C = HCFC-22	J = CFC-502
D = HFC-134a	K = Ammonia*
E = CFC-12	S = Special*
F = CFC-113	

*Not Listed under UL 2075.

Digits 10, 11
Design Sequence
A0 = First Design Sequence

General Information

Literature Change History

RMWD-TSR-1 (May 1996)

Original issue of the trouble shooting manual pertaining to Trane™ Model RMWD Refrigerant Monitor design sequence "A0".

Introduction

This document provides troubleshooting and repair information for the Trane RMWD style Refrigerant Monitor. Included is a discussion of the internal diagnostic test the instrument processor performs on the flow system hardware during start-up in addition to performance under normal operating conditions. Finally, unit diagnostic messages are described and specific component tests are provided.

Unit Description

The Trane™ Model RMWD Refrigerant Monitor circulates room air through a sensing cell to provide a continuous indication of refrigerant vapor concentration. It is intended for indoor use in mechanical equipment rooms which house air conditioning or refrigeration equipment or in areas where bulk refrigerants are stored.

The monitor utilizes infrared photoacoustic sensing technology, allowing accurate measurement of refrigerant vapors with minimum interference from other chemicals in the vicinity. The instrument is compound-specific and factory calibrated for the specific refrigerant of interest. It is capable of measuring down to 1 parts-per-million (ppm) and displaying refrigerant concentrations from 0-1,000 ppm. The monitor can signal alarms at three different concentration levels. These alarms are factory set, but can be easily adjusted in the field. A unit "trouble" alarm indicates internal problems with the instrument. A level alarm or a trouble alarm condition will cause the display to flash with a message and activate a dry contact relay(s) which can be used to control external alarm lights or horns, start emergency ventilation, or signal a building management system.

The refrigerant level alarm relays can be configured as latching or non-latching. 0-10 VDC and 4-20 mA analog outputs are provided for connection to a data recorder or building management system. These analog outputs can be scaled as 0-100 ppm or 0-1000 ppm. The standard unit monitors one zone. The optional multi-channel scanner can be factory or field installed to monitor up to four zones.

General Information

Infrared Photoacoustics

Increased industrialization together with a growing concern for human safety and the environment have stimulated the demand for sensitive and reliable methods of detecting trace amounts of pollutants and toxic gases. The advantages of infrared photoacoustic gas detection which the Trane RMWD refrigerant monitor uses include greater sensitivity, high immunity to interferents, fast response time and low maintenance.

The RMWD refrigerant monitor detects toxic gases by a process called infrared photoacoustic spectroscopy. The photoacoustic effect is the emission of sound by an enclosed sample on the absorption of chopped infrared light.

Portions of the Infrared Photoacoustics section reprinted with permission from Brüel and Kjær Instruments, Inc.

When a gas is irradiated with light, it absorbs some of the incident light energy, proportional to the concentration of the gas. The absorbed light energy is immediately released as heat and this causes the pressure to rise. When the incident light is modulated at a given frequency, the pressure increase is periodic at the modulation frequency. Pressure waves, or sound waves as they are commonly known, are easily measured with a microphone. They are audible if their frequency is between 20 Hz and 20 kHz.

The intensity of the sound emitted depends on a number of factors; the nature and concentration of the substance and the intensity of the incident light.

The selectivity which can be achieved in spectroscopy is due to the fact that substances absorb light of specific wavelengths which are characteristic of that substance.

The sequence of events in this process are:

- gas sample is sealed in measurement chamber
- chamber is irradiated with pulsed, narrow-band light
- gas absorbs light proportional to its concentration and converts it to heat
- gas heats and cools as the light is chopped
- temperature fluctuations generate pressure waves,
- pressure waves are detected by microphone

The main parts of a photo-acoustic set-up (see Figure 1) are a chamber to contain the gas sample, a light source, a means of modulating the light (usually a chopper), a detector to measure the sound (usually a microphone) and a method of processing the signal. The signal is interpreted by the electrical components into a parts per million (ppm) display.

Figure 1 - Typical Infrared Photoacoustic Setup

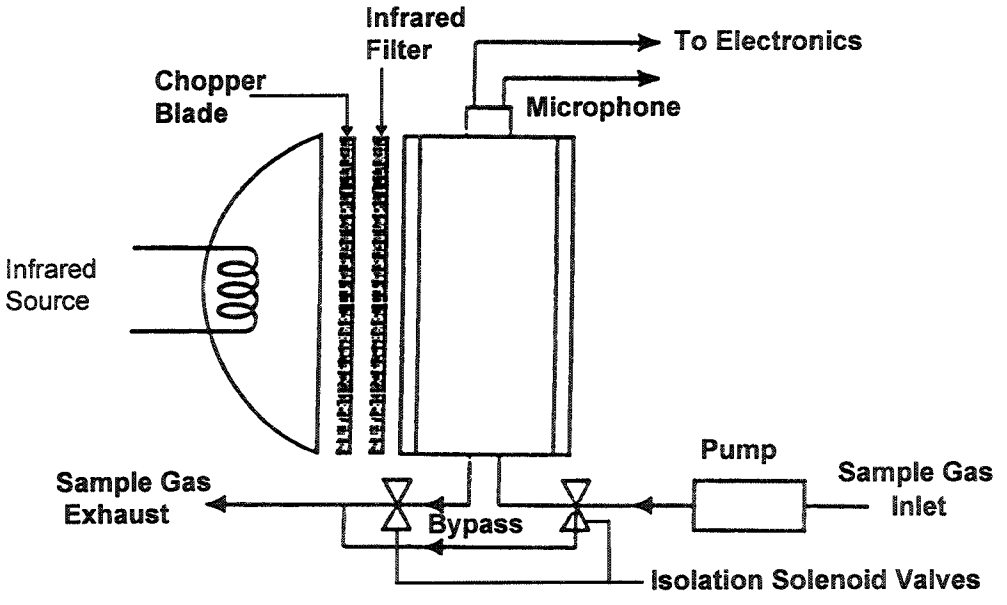

General Information

Fuse Holder **Jumper**

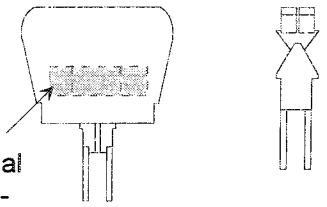

Internal Fuse - Replaceable

Fuse = Littelfuse 235002 or Buss GMA-2A

110 Volts AC, 2 Conductor

GND		GND
ACN	Jumper	ACN
AC	Fuse	AC

220 Volts AC, 2 Conductor, 50 Hz

GND		GND
ACN	Jumper	ACN
AC	Fuse	AC

220 Volts AC, 3 Conductor, 50 Hz

GND		GND
ACN	Fuse	ACN
AC	Fuse	AC

RMWD Style Refrigerant Monitor

Monitor Installation

- Securely mount vertically on wall away from vibration sources using four mounting tabs
- Monitor Installation, Operation and Maintenance manual, RMWD-IOM-1, or the latest revision, has detailed installation information
- Application engineering manual REF-AM-3, or the latest revision, Refrigeration System Equipment Room Design, has further recommendations regarding sampling locations to meet ASHRAE 15 guidelines

Wiring

- Monitor should have a dedicated power source to make sure it is always on even if other equipment is off
- Monitor will accept 100-240 volts a.c., 50 or 60 Hz
- Fuses (FUS 0927), jumper (PLU 0528) and fuse holder (HLD 0167 - black "key") ship with monitor in small box and are inserted in terminal strip, see examples at left for location.
- Monitor alarm contact ratings: Resistive: 7.2 amps at 120 volts a.c., 5.0 amps at 240 volts a.c.; Inductive: 2.88 amps pilot duty, 1/3 HP, 7.2 FLA, 43.2 LRA

Note: Monitor has a NEMA 4 rated enclosure. Use the plugged knockouts provided. Do not cut holes for wiring because shavings may short the electronics. Any added holes may compromise NEMA 4 integrity of the enclosure.

Trouble relay energizes during normal operation which closes normally open contacts. If monitor trouble occurs, relay is de-energized and contacts open

- Auxiliary input
  - 4-20 mA signal can come in to monitor from another device like an oxygen monitor - 18 AWG shielded wire is recommended, maximum of 250 feet (76 m)
  - level 3 alarm contacts change on excessive refrigerant concentration or mA signal
- 4-20 mA and 0-10 volt d.c. analog outputs
  - proportional to displayed refrigerant concentration
  - software selectable for 0-100 or 0-1000 ppm
  - 18 AWG shielded wire is recommended
  - 500 feet (152 m) max. length

Status LED's on main circuit board (see Figure 3)

- **Power:** green if normal
- **Alarm levels if refrigerant concentration exceeds setpoints:**
  Level 1 - amber
  Level 2 - red
  Level 3 - red
- **Ready:** green if normal
- **Trouble:** red if diagnostic appears

Filters

Change sample filters (ELM1144 - end of line, FLR1396 - inside monitor) regularly depending on the cleanliness of the equipment room. A flow loss condition at the monitor indicates a change may be required.

Figure 2 - Typical RMWD Monitor Major Component Locations

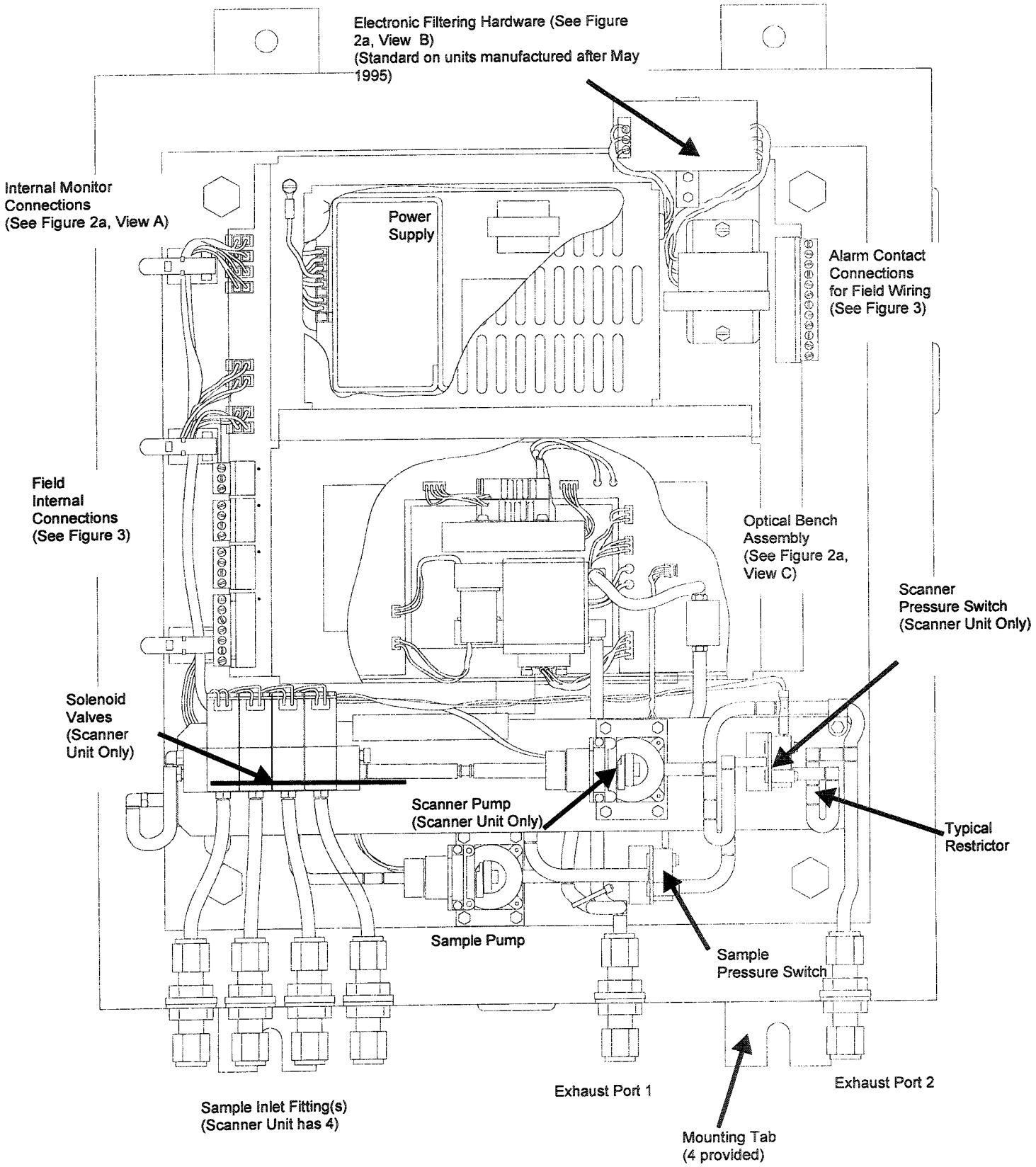

Figure 2 a - Typical RMWD Internal Wiring Connections

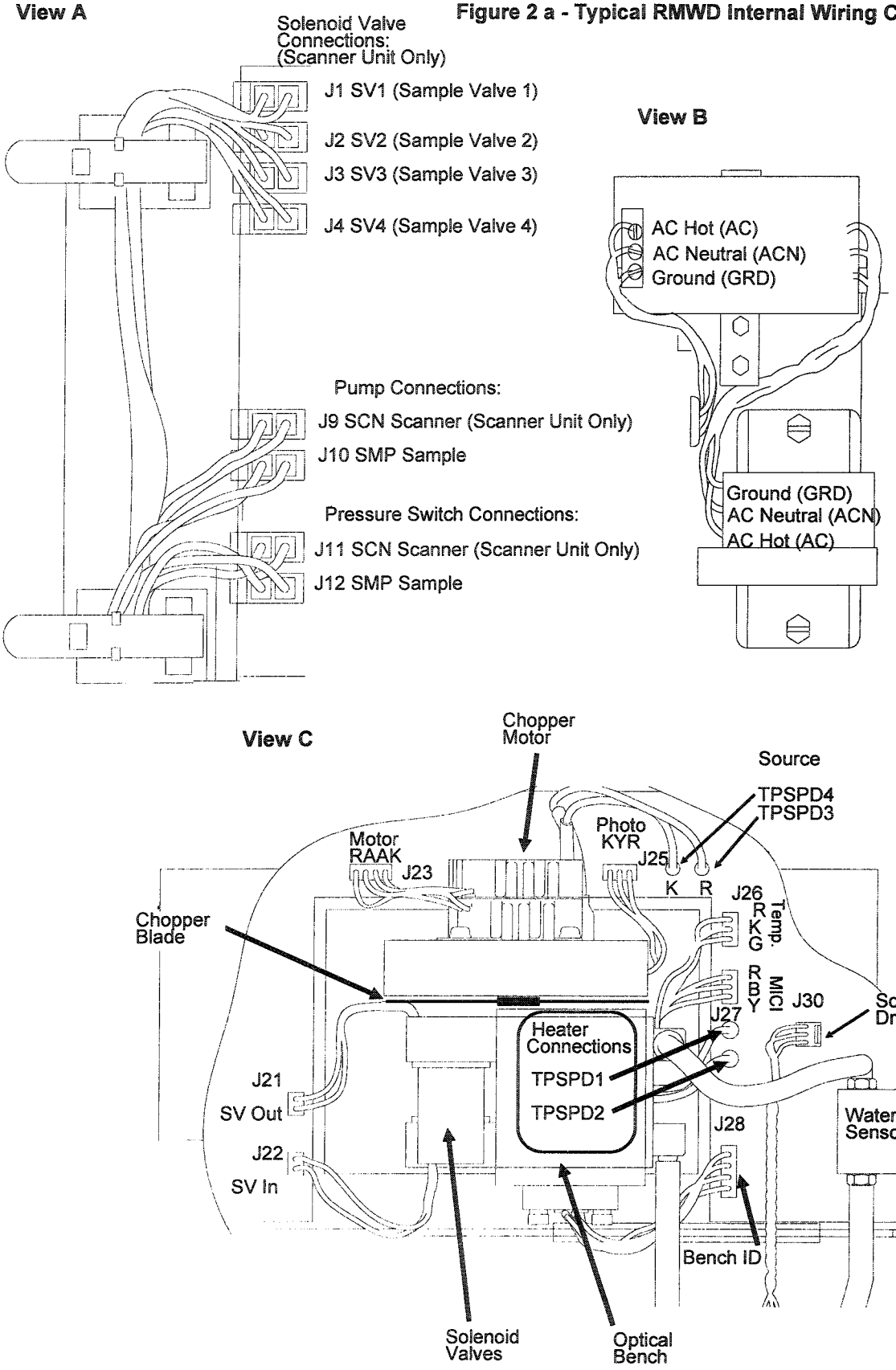

Figure 3

Remote Mounted Wiring

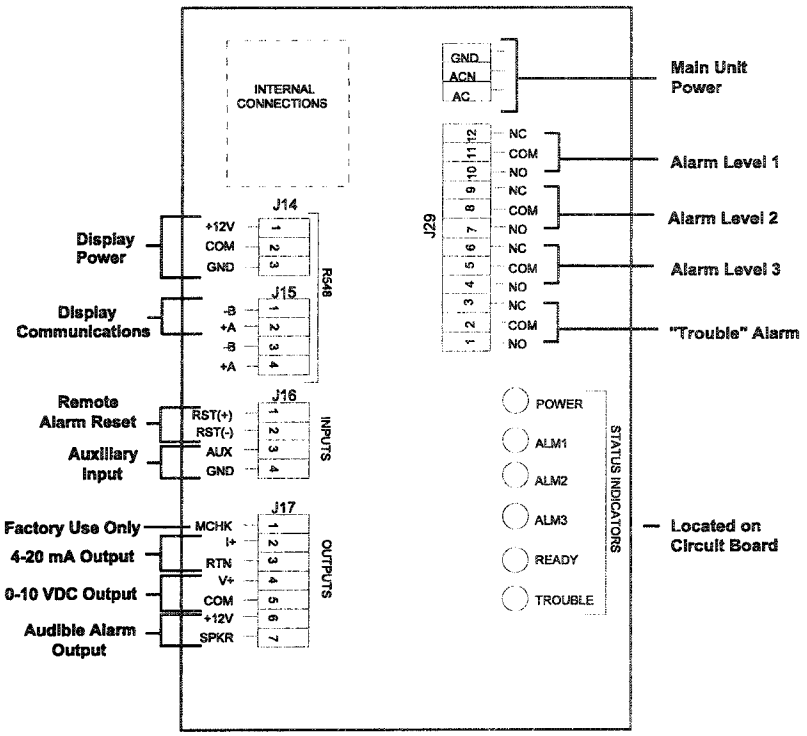

Unit Mounted/UCP2 Wiring

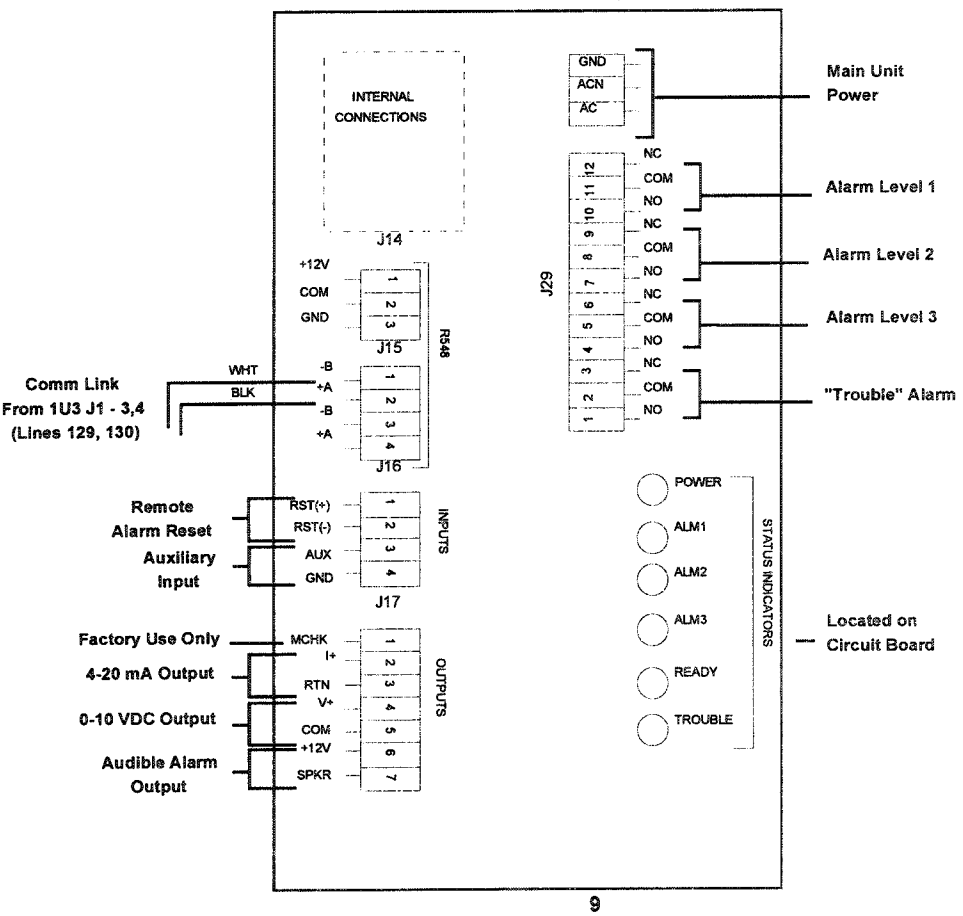

Figure 4 - UCP2 Schematic Wiring for Clear Language Display, Stepper and Circuit

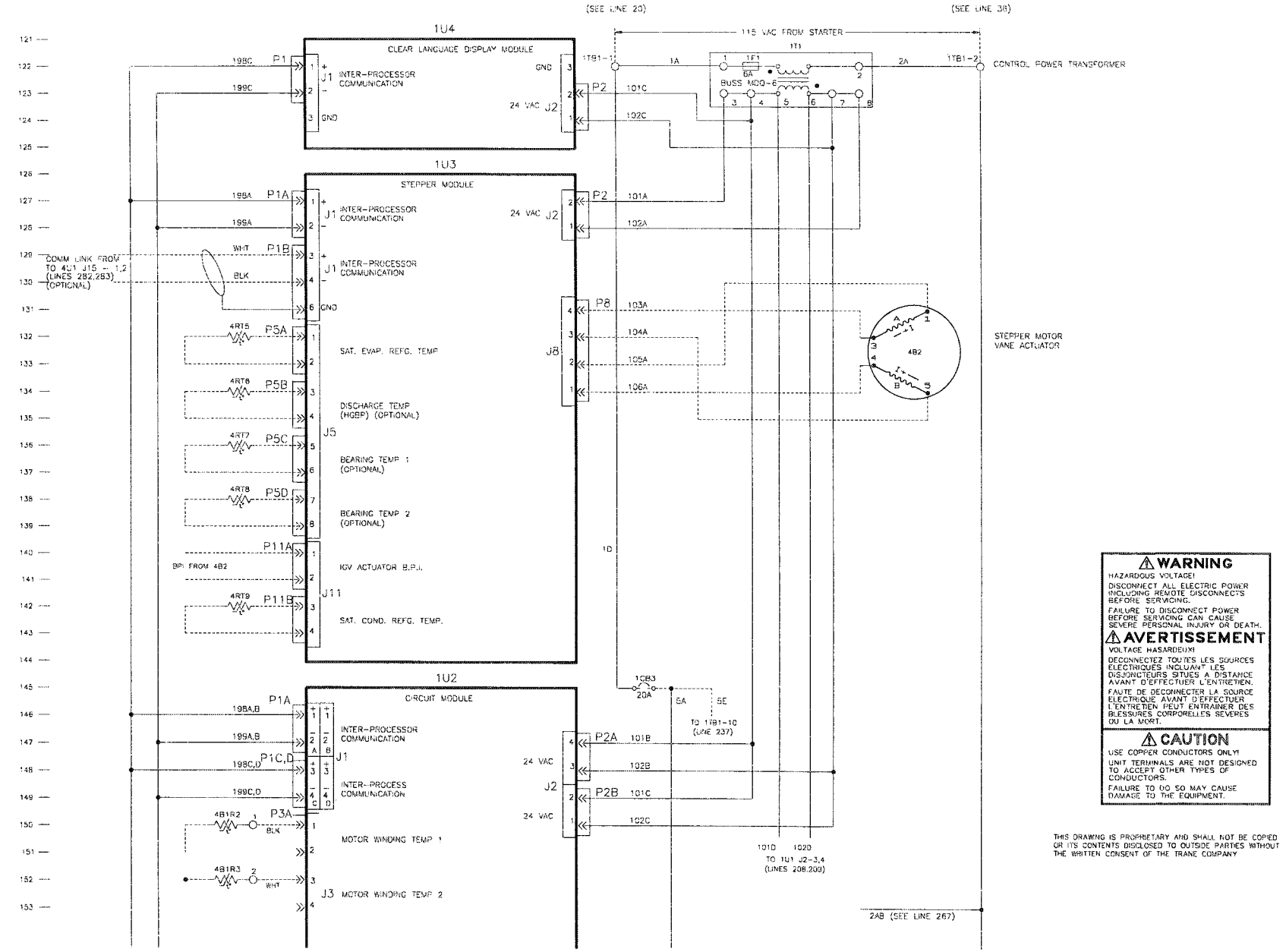

Figure 4 - UCP2 Schematic Wiring for Clear Language Display, Stepper and Circuit

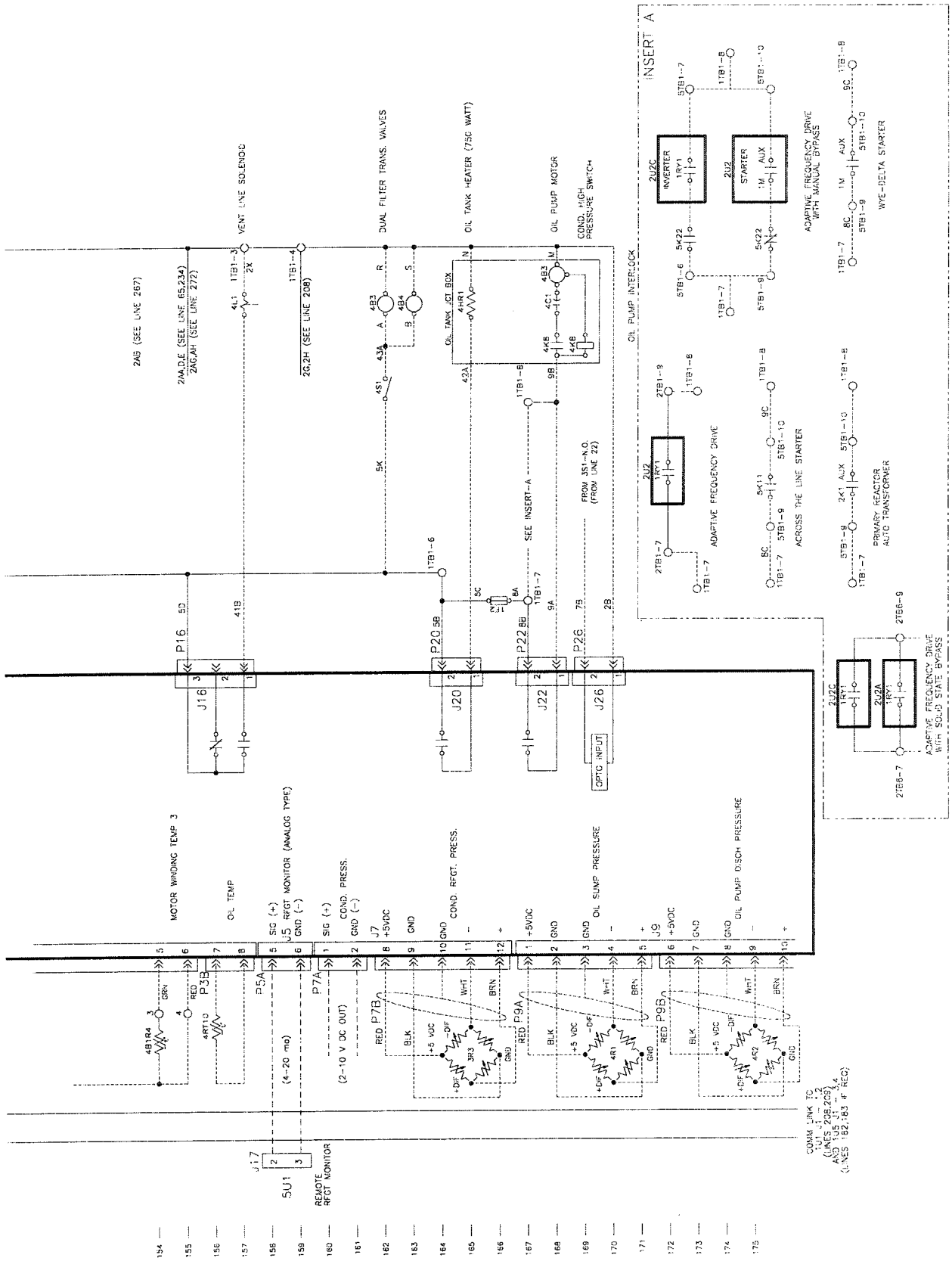

Refrigerant Monitor / UCP2 Connections

Two options exist:

- **Analog**: Alarm setpoint changes, etc. are done from the monitor's keypad. The UCP2 will only display the current parts per million (ppm) and has no control over the monitor. The UCP2 must be configured for analog type refrigerant monitor to display the ppm readout. Run 18 AWG shielded, twisted wire to the following terminals. **Note**: the maximum distance is 500 feet (152 m).

UCP2 - 1U2 (Circuit) Module		Refrigerant Monitor
J5-5	To	J17-2
J5-6	To	J17-3

See Figure 4 for wiring details.

- **IPC**: All settings and control of the refrigerant monitor is done through the UCP2 keypad. **Note:** To meet UL requirements, a green light (KIT2990) must be present in the monitor's door to show that power is applied. The UCP2 must be configured for IPC which will allow the refrigerant monitor screens in UCP2 to become active. Run 18 AWG shielded, twisted wire to the following terminals - 500 feet (152 m) maximum.

UCP2 - 1U3 (Stepper) Module		Refrigerant Monitor
1U3 J1-3	To	J15-1
1U3 J1-4	To	J15-2
J1-6, Use for ground		

See Figure 4 for wiring details.

Note 1: See software issues for related refrigerant monitor and UCP2 compatibility.

Note 2: KIT 3032 adds a human interface at the monitor to a RMWD monitor which doesn't have one.

Note 3: Control is from UCP2 or human interface on the monitor, not both.

Tracer Connections

- If UCP2 exists:
  A UCP2 TCI Comm 4 module (to Summit) and a TCI Comm 3 module (to Tracer 100) will upload the ppm display from the refrigerant monitor if configured in UCP2 as an analog monitor. If the refrigerant monitor is configured and connected IPC to UCP2, the ppm and any monitor diagnostics are passed up to Tracer.
- No UCP2:
  Tracer 100 Series does not accommodate connecting the Refrigerant Monitor directly to the Tracer. It would need to be connected to a PCM or UPCM. Tracer Summit BCU's each have two (2) Universal Input points that can be configured to interface the Refrigerant Monitor analog and / or binary outputs.

What Tracer does with the information depends on the sequence of operation for the job, what points are to be set up for alarms and how the Tracer is programmed. Contact BASD for details.

Battery Backup - The micro processor has a battery backup and the computer chip is non-volatile so that settings and memory are not lost when power is off to the unit. The unit itself does not have a battery backup to continue monitoring during a power outage.

Run Test Monitor - Alarm contact relays can be tested by using the span gas from the calibration kit. Change the alarm contact setpoints below the concentration for the span gas and apply the span gas to the sample inlet. The contacts should change state.

Software Issues

A white label located in the top of the monitor enclosure shows the manufacturing date. The software version number for the human interface is displayed during warm-up. This information is also found in the Status Menu.

Design sequence A, Software version 1.0 - The first date codes in production were mid-August 1994. The optional audible alarm will sound on a level 3 alarm.

Design sequence A, Software version 2.0 - This started in production on March 2, 1995 and allows communication / programming from the UCP2. Therefore, the monitor could function without the clear language display. This version will support the optional monitor mounted audible alarm selectability for alarm levels 1, 2 or 3. The audible alarm can also be set to alarm for a monitor trouble condition. Note that this is independent of the three alarm levels. Refrigerant R-12 monitors are fully supported by software.

Design sequence A, Software version 2.0 - UL label applied starting April 1, 1995. At the same time additional electronic hardware was added to the bench circuit to minimize interference from radiated electrical noise such as radio pagers, etc.

Design sequence A, Software version 3.0 - All refrigerant monitors with a date code of June 20, 1995 or later have version 3 of refrigerant monitor software. This software will change the analog output so it doesn't go to 2.0 mA during monitor check. This situation caused nuisance diagnostics on the UCP2.

Version 2 software will allow the UCP2 to communicate directly with the refrigerant monitor via the IPC (inter-processor communication link). The UCP2 must have software released on February 17, 1995 or later, and the modules must have the extensions as shown below.

Description	CTV X-Code	RTHB X-Code
Chiller Module (required UCP2 module)	X13650450-08	X13650499-05
Clear Language Display Module (required UCP2 module)	X13650448-07	X13650448-07
TCI Comm4 Module (optional UCP2 module)	X13650457-05	x13650457-05
TCI Comm3 Module (optional UCP2 module)	X13650460-05	X13650460-05
TCI Printer Interface Module - (optional UCP2 module)	X13650458-05	X13650458-05

General Information

Monitor Cross-Sensitivity

The Trane Refrigerant Monitor is factory calibrated specifically for the refrigerant of interest. With the large number of different chemicals and refrigerants in equipment rooms, it is very important that an air monitoring device be as resistant to cross-sensitivity as possible. The photo-acoustic technology used in this instrument is one of the most selective available; however, the instrument may respond, in varying degrees, to other chemicals that may be in the monitored area. Listed below are the instrument's sensitivity to 100 ppm of other commonly used refrigerants when calibrated for the specific refrigerant listed. These are typical values for reference only.

Example: A monitor calibrated for HCFC-123 will display 4 ppm when exposed to 100 ppm of HCFC-22.

Calibrated for HCFC-123

Refrigerant	Response
CFC-11	<1 PPM
HFC-134a	140 PPM
HCFC-22	4 PPM
CFC-113	80 PPM

Calibrated for CFC-11

Refrigerant	Response
HCFC-123	3 PPM
HFC-134a	20 PPM
HCFC-22	30 PPM
CFC-113	25 PPM

Calibrated for HCFC-22

Refrigerant	Response
HFC-134a	25 PPM
CFC-11	16 PPM
HCFC-123	35 PPM
CFC-113	39 PPM

Calibrated for HFC-134a

Refrigerant	Response
HCFC-22	1 PPM
HCFC-123	8 PPM
CFC-11	2 PPM
CFC-113	17 PPM

Due to the large number of possible interferants other than refrigerants, it is impractical to list them. Direct any questions regarding specific interferants that are expected to be in the monitored area to your local Trane office.

Note: Cross-sensitivity data not verified during UL testing.

The optional Trane unit mounted refrigerant monitor is operationally identical to the remote mounted monitor, except for the clear language display. This has been replaced by a plain, painted front panel, with a green light to indicate power is present. The unit mounted monitor also has some additional stiffeners and hardware to eliminate the transmission of any vibration.

The menu screen "Refrigerant Monitor Type" at the UCP2 human interface allows the selection of two possible values:

- 01 - Analog Monitor
- 02 - IPC Monitor

When **IPC Monitor** is entered, the menu asks for a password prior to accessing the settings and then rotates through a series of screens to initiate the monitor. The password, UCP2 set-ups, inputs, calibration and diagnostic menus are found in the latest revision of CVHE-CLD-1 under the heading "Refrigerant Monitor Settings Group".

The unit mounted refrigerant monitor is designated 4U1 on Trane wiring diagrams. Although the Interprocessor Communication can go to any IPC connection, it was placed at the stepper module 1U3 since this was an open connection.

Figure 5 - Typical Unit Mounted Refrigerant Monitor

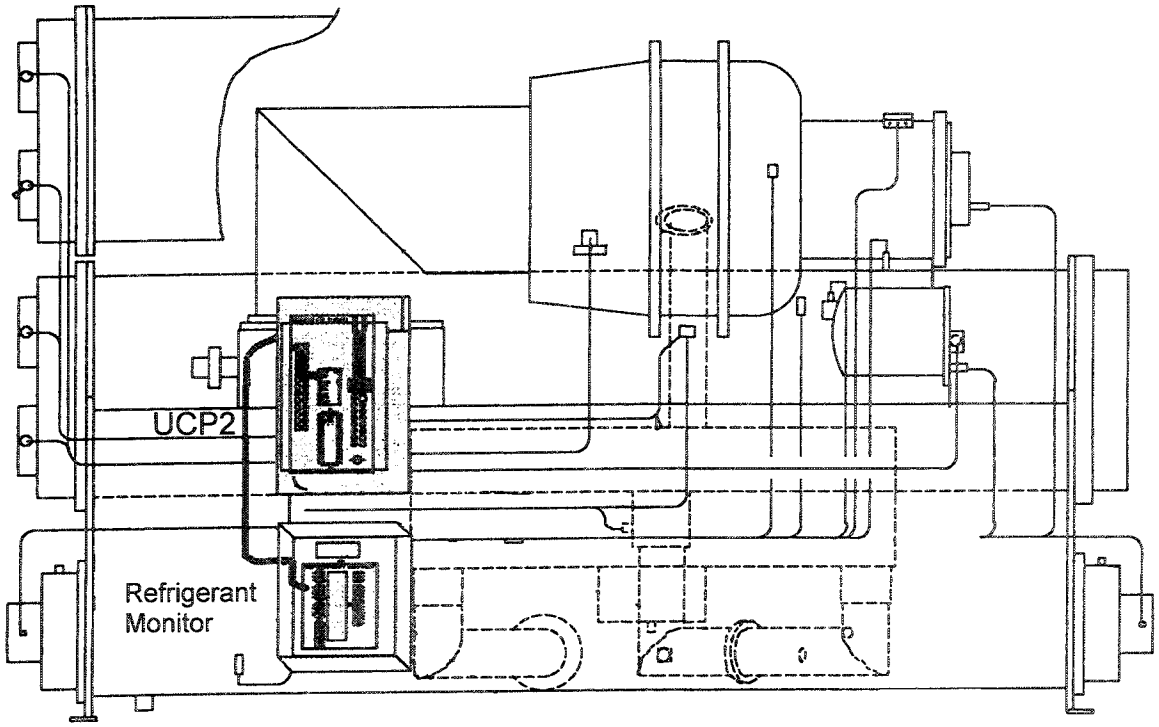

Monitor Control

RMWD refrigerant monitor control is from either the unit mounted CLD or the UCP2 (CVRB) clear language display but not both. One clear language display on the unit or UCP2 cannot be used to control more than one monitor.

Method for controlling two or more devices from a single monitor alarm contact:

The dry contacts in the refrigerant monitor can be used to control multiple devices such as lights, buzzers, exhaust fan contactors, etc. The Technical Specifications section of this manual lists the monitor contact ratings which should not be exceeded. The preferred method for powering multiple devices is shown in Figure 6 which shows a relay powered through the monitor's alarm contacts. The relay's contacts then power the other devices. This provides isolation so that sensitive components like the Trane tower light can be wired to the same circuit as an exhaust fan contactor.

Clear Language Display (CLD)

All setup, alarm, diagnostic, measured concentration and calibration information for the monitor is accessed through an eight button, two line, 16 character backlit clear language display (CLD) mounted in the unit front panel.

Items to check:

- The chip may have a terminal that appears to be in place, but is actually bent over on top of the socket, making occasional contact. Look under the chip.
- Touch the keypad to assure that the display has not been turned off. Try more than one key in case it is a keyboard problem. Check the keyboard connector on the CLD board.
- On the RMWD from the top pin in the main board to the bottom the voltages are as follows:
  - J 14 - 1, +12 vdc
  - J 14 - 2, Common - 0 vdc
  - J 14 - 3, Ground - 0 vdc
  - J 15 - 1, - B + 1.6 to GND
  - J 15 - 2, +A + 2.3 to GND
    Measured 0.7 to 0.8 from A to B
  - J 15 - 1, -B to + A, + 0.7 vdc

If the display is not lit, check the connection on the CLD board with the red and black wires which powers the display light.

R-12 "Undefined" Message
The R-12 monitors, version 1.0, were coded so there was no way to put R-12 onto the clear language display. A compromise was to use the word "undefined". Version 2.0 or later software fully supports R-12 monitors.

Figure 6 - RMWD Wiring for Controlling Two Devices from One Alarm Contact

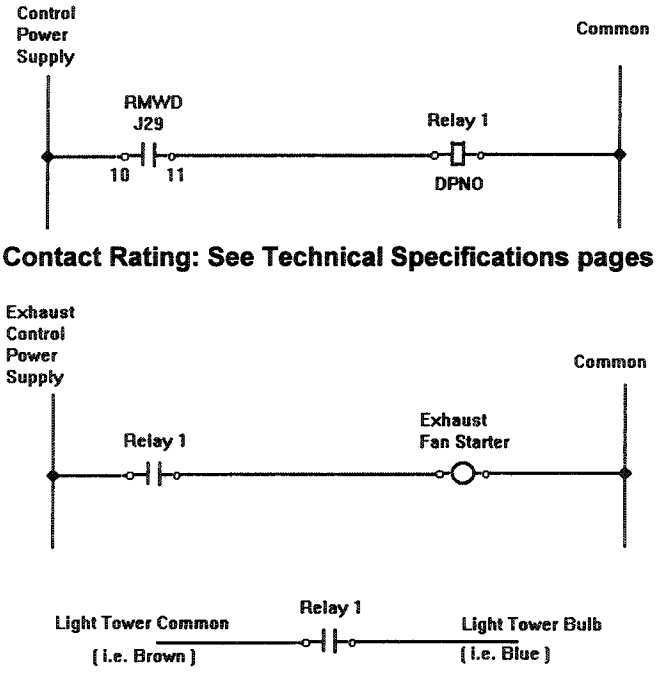

Figure 7 - Typical Clear Language Display Wiring

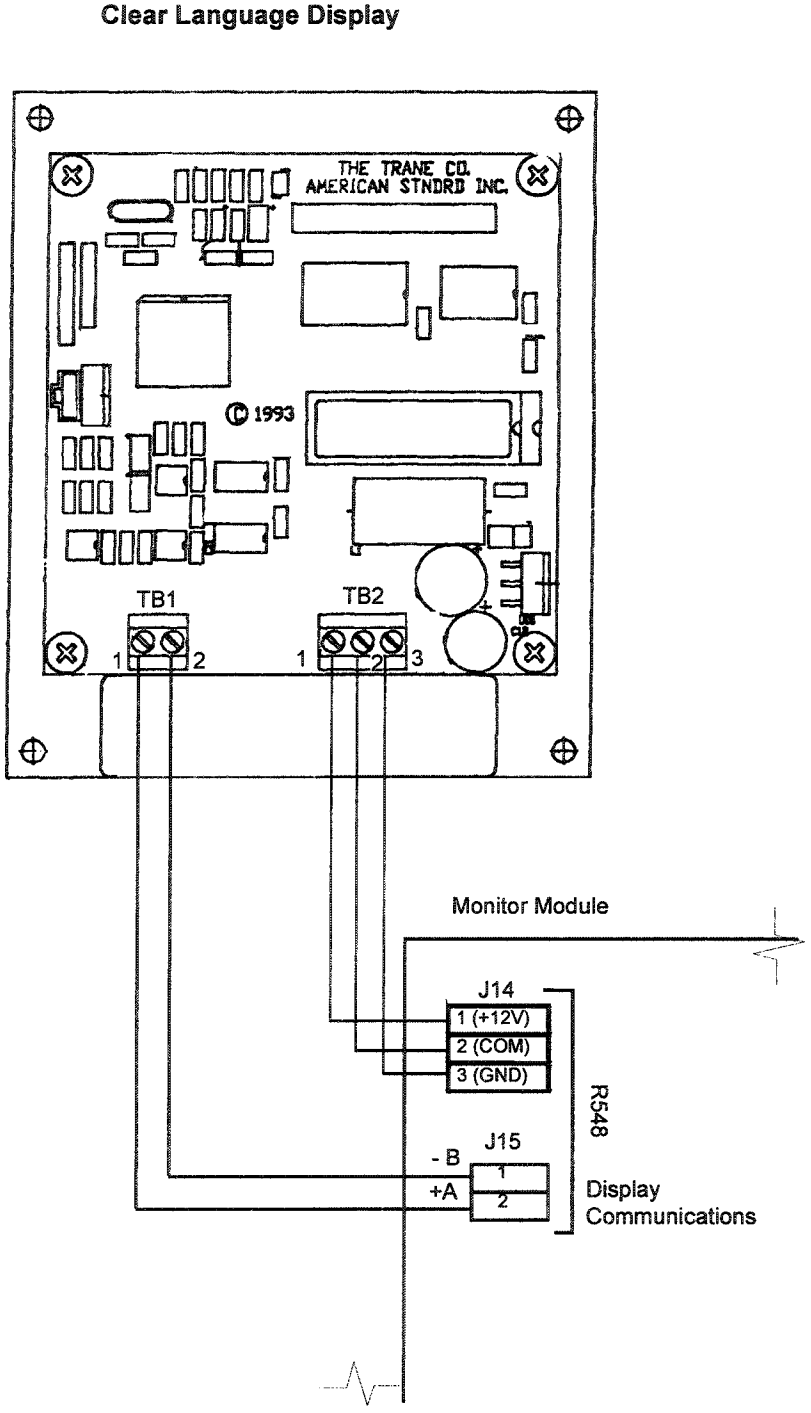

Operation

Major Menu	Side Menus	Description
READY XXXX ppm R-XXX		Refrigerant Monitor operating mode [WARMUP, READY, MONITOR CHECK, TROUBLE] (Single Channel Unit Only)
CHAN X READY XXXX ppm R-XXX		Refrigerant Monitor operating mode [WARMUP, READY, MONITOR CHECK, TROUBLE] (Channel Scanner Unit Only)
1 STATUS Report <Enter> to View	Entry point into the SAMPLE Report	
	Current Sample = XXXX ppm R-XXX	The current refrigerant sample point (displayed if channel scanner is not installed)
	Current Chan X = XXXX ppm R-XXX	The current refrigerant sample point (displayed if channel scanner is installed)
	Last Channel 1 = XXXX ppm R-XXX	The last value read from Sample Point #1 (displayed if channel scanner is installed)
	Last Channel 2 = XXXX ppm R-XXX	The last value read from Sample Point #2 (displayed if channel scanner is installed)
	Last Channel 3 = XXXX ppm R-XXX	The last value read from Sample Point #3 (displayed if channel scanner is installed)
	Last Channel 4 = XXXX ppm R-XXX	The last value read from Sample Point #4 (displayed if channel scanner is installed)
	Case Temp=XX.X C Bench Temp=XX.X C	The temperature of the Refrigerant Monitor's Case. The temperature of the Refrigerant Monitor's Optical Bench
	Auxiliary Input = XX.X mA	The current auxiliary mA signal being sent to the monitor. (Displayed if auxiliary input is installed.)
	Clear Lang Dspl Software Ver XXX	The current software version of the Refrigerant Monitor Clear Language Display.
	Rfgt Monitor Software Ver XXX	The current software version of the Refrigerant Monitor.
2 SETTINGS Reprt <Enter> to View	Entry point into the SETTINGS Report	
	Alarm Level 1 = XXXX ppm R-XXX	The minimum refrigerant concentration necessary to trigger a Level 1 Refrigerant Alarm (press + to increment, - to decrement) **XXXX ppm** *
	Alarm Level 2 = XXXX ppm R-XXX	The minimum refrigerant concentration necessary to trigger a Level 2 Refrigerant Alarm (press + to increment, - to decrement) **XXXX ppm** *
	Alarm Level 3 = XXXX ppm R-XXX	The minimum refrigerant concentration necessary to trigger a Level 3 Refrigerant Alarm (press + to increment, - to decrement) **XXXX ppm** *
	**Audible Alarm For Rfgt = XXXXX	The refrigerant alarm level which causes the optional Audible Alarm to sound [Off, Alarm1, Alarm2, **Alarm3**]
	**Audible Alarm For Trouble = XXX	Select the optional Audible Alarm to sound for a Trouble condition [**Off**, On]
	Alarm Level 1 = XXXXX	Alarm Level 1 relay configuration [Latching, **Non-Latching**]
	Alarm Level 2 = XXXXX	Alarm Level 2 relay configuration [Latching, **Non-Latching**]
	Alarm Level 3 = XXXXX	Alarm Level 3 relay configuration [Latching, **Non-Latching**]
	Channel Scanner = XXXXX	Select the multi-channel scanner [**Installed**, **Not Installed**] **Default dependent on scanner installation** (only displayed during "Warm-up")
	Scanner Chan 1 = XXXXX	Select Channel 1 Status [**Active,** Inactive] (displayed if channel scanner is installed)
	Scanner Chan 2 = XXXXX	Select Channel 2 Status [Active, **Inactive**] (displayed if channel scanner is installed)
	Scanner Chan 3 = XXXXX	Select Channel 3 Status [Active, **Inactive**] (displayed if channel scanner is installed)
	Scanner Chan 4 = XXXXX	Select Channel 4 Status [Active, **Inactive**] (displayed if channel scanner is installed)
	Dwell Threshold = XX %	Select the percentage of Alarm Level 1 necessary to dwell on a channel for an additional 60 seconds 30 - **70%** (displayed if channel scanner is installed)
	Auxiliary Input = XXXXX	Select Auxiliary Input installation status [Installed, **Not Installed**]
	Aux Input Alarm = XXXXX	Select Auxiliary Input alarm status [**Enabled,** Disabled] (displayed if Auxiliary Input is Installed)
	Auxiliary Alarm Level = XX.X mA	Select the alarm condition level for the auxiliary input. (displayed if Auxiliary Input is Installed)

Bold = Factory Default
* See Factory Default Value Chart in Settings Side Menu
** Added to CLD software version 2.0

Refrigerant Monitor Menu Screens (Cont.)

Major Menu	Side Menus	Description/Ranges
	Aux Input Alarm Direction=XXXXX	The alarm direction for the auxiliary input. [**Below**, Above] (displayed if Auxiliary Input is Installed.)
	**Audible Alarm For Aux = XXXXX	Select the optional Audible Alarm to sound for an Auxiliary Input Alarm condition [**Off**, On] (displayed if Auxiliary Input is Installed)
	Analog Output Range 0-1000 ppm	Refrigerant Monitor Analog Output range [0-100ppm, **0-1000ppm**], 0-10VDC & 4-20mA scaling factor.
3 Calibration <Enter> to Cal		Entry point to CALIBRATION report
Enter Password XXXX		Enter 6 digit password "– + – – + +"; Monitor mode changes to Monitor Check.
Chan X Mon Check XXXX ppm R-XXX		Displays current refrigerant concentration. Alarms disabled.
Refrigerant Zero <Enter> to Cal		Entry point to Refrigerant Zero Calibration routine
	Starting Cal Please Wait	Monitor module preparing for Zero calibration. If scanner is installed, locks onto Channel 1.
	Connect Zero Gas <Next> to Continue	Connect Zero gas canister or Scrubber filter to sample inlet. (Channel 1 if scanner is installed.)
	Open Valve <Next> to Continue	Open Zero gas canister regulator if used.
	XXXX ppm R-XXX <Enter> to Adj	Refrigerant Zero concentration sensed.
	Locking Reading Please wait	Locks current reading.
	Refrigerant Zero XXXX ppm R-XXX	Press (+) increase reading or (-) to decrease displayed value to Zero.
	Starting Cal Please Wait	Monitor module preparing for Zero calibration.
	Successful Calibration	New Zero calibration values accepted.
	Cal Failed <Enter> to retry	Monitor unable to accept new zero value. Reverts back to previous Zero value.
Refrigerant Span <Enter> to CAL		Entry point to Refrigerant Span Calibration routine
	Starting Cal Please Wait	Monitor module preparing for calibration. If scanner is installed, locks onto Channel 1.
	Connect Span Gas <Next> to Continue	Connect Span gas canister to Sample inlet (Channel 1 if scanner is installed)
	Open Valve <Next> to Continue	Open Span gas canister regulator.
	XXXX ppm R-XXX <Enter> to Adj	Actual Refrigerant Span concentration sensed.
	Locking Reading Please wait	Locks current reading.
	Refrigerant Span XXXX ppm R-XXX	Press (+) increase reading or (-) to decrease displayed Span value.
	Starting Cal Please Wait	Monitor is adjusting calibration values.
	Successful Calibration	New Span calibration values accepted.
	Cal Failed <Enter> to retry	Monitor unable to accept new Span value. Reverts back to previous Span calibration value.
Press <Enter> to exit Cal		Exit Calibration Menu

Bold = Factory Default
** Added to CLD software version 2.0

Start-Up Sequence

The start-up diagnostic test for a single point unit and the start up diagnostic test for a scanner unit are two different tests. A single point unit must be configured as a single point unit (Channel Scanner Not Installed) and a scanner must be configured as a scanner (Channel Scanner Installed). The display will confirm if the unit is configured as a scanner by showing a channel number with the instrument read-out. The instrument runs the diagnostic test prior to allowing the operator to reconfigure the unit. Installing or not installing a scanner is an option only when the unit has just been powered up and in warm-up mode. Changes in this Settings Menu, if necessary, must be made at this point. The operator must then wait a minimum of eight seconds, power off and restart the unit to check that the change was stored in memory.

During start up and while the unit is performing the flow diagnostic test, the sample inlet(s) and exhausts should not be blocked or the unit will fail this test. Put a sample filter on each used and unused channel, so that on initial power up or a power failure, the scanner sees all channels open.

A unit that has failed a start-up diagnostic test will continue to display a flow loss error even if the problem that caused the unit to generate this error is corrected. To correct the problem, the unit must be powered off, restarted and successfully pass the appropriate flow diagnostic test to eliminate the flow loss error display.

A unit that has generated a flow loss error during normal operation will respond to the correction of the problem that caused the error and the error display will clear. A scanner unit may however take one scanner cycle to finally clear the error message. Check the READY LED on the right side of the main board for instantaneous indication of the instrument's status.

A single point unit will only generate a Bench Flow Loss. A scanner unit generate either a Bench Flow Loss error or a Scan Flow Loss error. Bench Flow Loss will take precedence over Scan Flow Loss in a scanner unit with both faults.

The bench pressure switch actually changes state during the diagnostic test and normal operation. **Shorting the terminals of this switch will NOT resolve the bench flow loss**. It will cause the unit to fail the start up diagnostic test or fail during normal operation. The scan pressure switch is required to switch during start-up once and remain closed during normal operation. **Do not short either of the pressure switches.**

The pressure switches measure the differential pressure across the two orifice restrictors (see Figure 9). There is no flow through the switch.

Bench Flow Loss

⚠ Caution:
Use care when handling tubes and fittings. The fittings are rigid and easily broken.

Single Point Units

Disconnect all inlet and exhaust tubing outside the monitor enclosure. This will isolate the problem to within the monitor or in the external tubing and filter(s).

The bench solenoid valves open and close every 3.5 seconds. Check for bubble activity at EXHAUST Port 2 as shown in Figure 10. Low flow or no flow at this port is most likely caused by a defective pump or saturated inline particle filter.

Check for bubble activity at EXHAUST Port 1. Flow will start and stop depending on if bench solenoid valves are open or closed. If flow does not completely stop, one or both of the bench valves are defective or the inlet fitting to the optical bench may be loose.

Use a voltmeter to measure the logic input from the pressure switch (negative lead to chassis, positive lead to black wire of SMP PRSS connector on left of main board). Set the range of the volt-meter to 0.00 (range hold auto-ranging voltmeters) and monitor the logic level switch every 3.5 seconds during normal operation.

A pressure switch that is always open may be the result of a defective pressure switch, loose tubing connecting to pressure switch or a clogged restrictor in the tubing.

A pressure switch that is always closed may be the result of a loose fitting to the inlet of the optical bench in addition to the same causes for a switch always open.

If the Bench Flow Loss error is the result of the unit failing the start-up diagnostic test, restart the unit while monitoring the logic input of the bench pressure switch. The result should match the bench pressure switch logic input as shown in Table 1.

A pressure switch that is not switching fast enough to follow the test sequence is most likely the result of deterioration in pressure switch performance but may be one of the reasons stated previously.

The fittings on the inline filter are glued and any attempt to remove or change the direction of the fittings will break the seal and/or crack the filter housing. A cracked filter fitting will not generate a Bench Flow Loss error in a single point unit. However, it will cause sample dilution. Replace the entire filter assembly if a problem is suspected.

A leak in the brass union fittings for the sample inlet or exhausts will not generate a Bench Flow Loss error, however, these fittings should be changed if a leak is suspected.

Reconnect all tubing when done. Use an end of line filter on each input line. Limit the length of tubing on any one port to 150 ft. (45.7m) (total length of sample and exhaust lines). Do not combine exhaust lines.

Table 1 - Single Point Unit Start-Up Diagnostic Routine

	Duration (Sec)	Bench Inlet Valve	Bench Outlet Valve	Bench Pressure Switch
Start Up Test	12	Closed	Closed	Open
	1	Open	Open	Closed
	1	Open	Closed	Open
	1	Open	Open	Closed
	1	Closed	Open	Open
Cycle repeats like this during Normal Operation	3.5	Open	Open	Closed
	3.5	Closed	Closed	Open
	3.5	Open	Open	Closed
	3.5	Closed	Closed	Open

Bench Flow Loss

⚠ Caution:
Use care when handling tubes and fittings. The fittings are rigid and easily broken.

Scanner Units

Disconnect all inlet and exhaust tubing outside the monitor enclosure.

Check flow at EXHAUST port 1 (see Figure 10). The bench valves cycle on and off every 3.5 seconds.

No or low flow at this port is most likely caused by a defective sample pump or saturated particle filter. It may also be caused by a defective scanner valve. Allow the channel scanner to scan all four lines to determine if low flow is associated with one or all of the scanner lines.

If the flow does not vary slightly between two different levels every 3.5 seconds, this could indicate a defective bench valve or a loose inlet fitting to the optical bench.

Use a voltmeter to measure the logic input from the pressure switch (negative lead to chassis, positive lead to black wire of SMP PRSS connector on left of main board). Set the range of the voltmeter to 0.00 (range hold auto-ranging voltmeters) and monitor the logic level switching every 3.5 seconds during normal operation.

A pressure switch that is always open may be the result of a defective pressure switch, loose tubing connecting to pressure switch or a clogged restrictor in the tubing.

A pressure switch that is always closed may be the result of a loose fitting to the inlet of the optical bench in addition to the same causes for a switch always open.

If the Bench Flow Loss error is the result of the unit failing the start up diagnostic test, restart the unit while monitoring the logic input of the bench pressure switch. The result should match the bench pressure switch logic input as shown in Table 2.

Table 2 - Scanner Unit Start-Up Diagnostic Routine

	Duration (Sec)	Scan Valve 1	Scan Valve 2	Scan Valve 3	Scan Valve 4	Bench Inlet Valve	Bench Outlet Valve	Bench Pressure Switch	Scanner Pressure Switch
Start Up Test	12	Scan	Scan	Scan	Scan	Closed	Closed	Open	Closed
	1	Sample	Scan	Scan	Scan	Open	Open	Closed	Closed
	1	Sample	Scan	Scan	Scan	Open	Closed	Open	Closed
	1	Sample	Scan	Scan	Scan	Open	Open	Closed	Closed
	1	Sample	Scan	Scan	Scan	Closed	Open	Open	Closed
	1	Sample	Scan	Scan	Scan	Open	Open	Closed	Closed
	1	Scan	Scan	Scan	Scan	Open	Open	Open	Closed
	1	Scan	Sample	Scan	Scan	Open	Open	Closed	Closed
	1	Scan	Scan	Scan	Sample	Open	Open	Open	Closed
	1	Scan	Scan	Sample	Scan	Open	Open	Closed	Closed
	1	Scan	Scan	Scan	Scan	Open	Open	Open	Closed
	1	Scan	Scan	Scan	Sample	Open	Open	Closed	Closed
	1	Scan	Scan	Scan	Scan	Open	Open	Open	Closed
	1	Sample	Sample	Sample	Sample	Open	Open	Closed	Open
Cycle repeats like this during Normal Operation	3.5	Sample	Scan	Scan	Scan	Open	Open	Closed	Closed
	3.5	Sample	Scan	Scan	Scan	Closed	Closed	Open	Closed
	3.5	Sample	Scan	Scan	Scan	Open	Open	Closed	Closed
	3.5	Sample	Scan	Scan	Scan	Closed	Closed	Open	Closed

Bench Flow Loss

⚠ Caution:
Use care when handling tubes and fittings. The fittings are rigid and easily broken.

The scanner manifold valves allow flow to the scanner pump when not energized (normally open port) and will be noted as Scan in Table 2 to indicate that flow from this line is directed to the scanner pump. The scanner manifold valves will redirect flow to the sample pump when energized (normally closed port) and will be noted as Sample in Table 2 to indicate that flow from this line is directed to the sample pump.

A pressure switch that is not switching fast enough to follow the previous test sequence is most likely the result of deterioration in pressure switch performance but may be due to one of the reasons stated earlier.

The fittings on the inline filter are glued and any attempt to remove or change the direction of the fittings will break the seal and/or crack the filter housing. A cracked filter fitting will cause a scanner unit to fail a diagnostic start up test and generate a Bench Flow Loss error. Replace the entire filter assembly if a problem is suspected.

A leak in the scanner manifold valves or the fittings on that block will cause the unit to fail a start up diagnostic test and the generation of a flow fail error. A leak to the sample side will cause a bench flow loss error and a leak to the scanner side will cause a scanner flow loss error. Any leak in solenoids or fittings and tubing leading to the sample pump will cause a bench flow loss. If a problem is suspected with the scanner manifold/valves, the entire assembly should be replaced.

A leak in the brass union fittings for the sample inlet or exhausts will not generate a Bench Flow Loss error, however, these fittings should be changed if suspected of leaking.

Reconnect all tubing when done. Use an end of line filter on each input line. Limit the length of tubing on any one port to 150 ft. (45.7m) (total length of sample and exhaust lines). **Do not** combine exhaust lines.

Figure 8 - Scanner Assembly

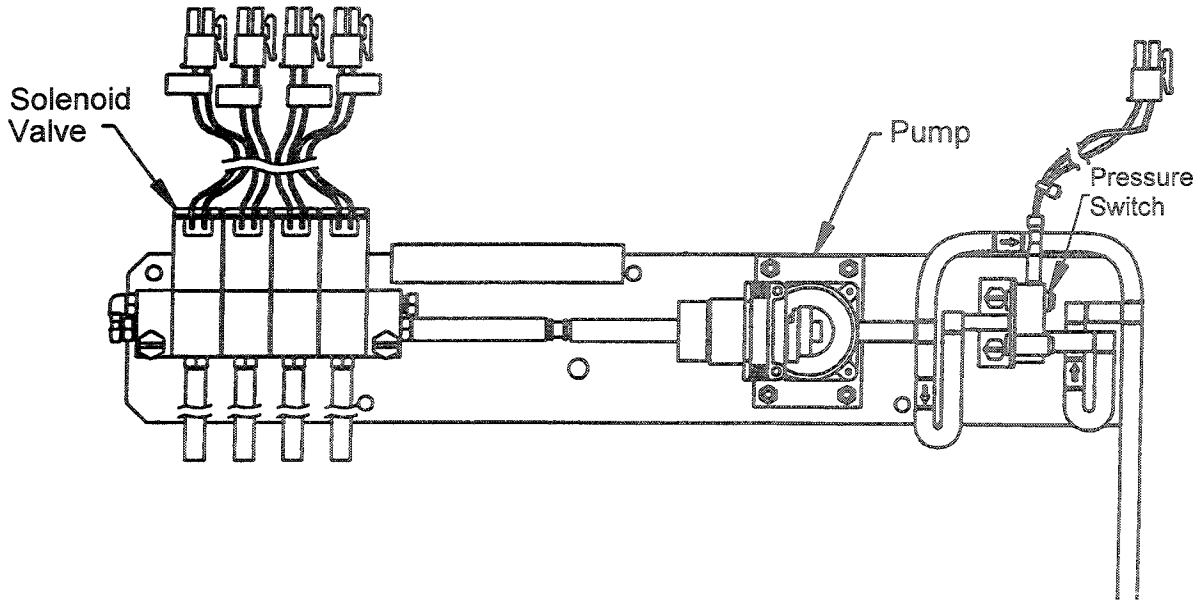

Scan Flow Loss

⚠ Caution:
Use care when handling tubes and fittings. The fittings are rigid and easily broken.

Scanner Unit

Disconnect all inlet and exhaust tubing outside the monitor enclosure.

During normal operation, the scan pressure switch is closed. Check flow at EXHAUST port 2 (see Figure 10). Low or no flow indicates a defective scanner pump. If the flow is sufficient, use a voltmeter to test the logic input of the scan pressure switch (negative lead to chassis, positive lead to black wire of SCN PRSS connector on left of main board). Set the range of the voltmeter to 0.00 (range hold auto-ranging voltmeters). This should remain **closed** during normal operation. If there is flow but the switch is open, the probable cause is a defective switch, loose tubing to the switch or clogged restrictor in the tubing leading to the pressure switch ports.

The scan flow switch is tested only once during the diagnostic test. It remains closed during normal operation. If the unit generates a Scan Flow Loss error as a result of failing the diagnostic test, monitor the output at EXHAUST port 2 (see Figure 10). Restart the unit and about 25 seconds into the diagnostic test, the flow should dip to zero for one second and the scanner pressure switch should open (check logic input of scanner pressure switch in Table 2). If the flow does not cease entirely for that one second, there is a leak in the scanner valve assembly and/or the fittings and tubing between that assembly and the scanner pump. If the flow does actually drop to zero but the pressure switch does not respond, then look for a defective pressure switch, loose tubing and/or clogged restrictor to the switch.

Reconnect all tubing when done. Use an end of line filter on each input line. Limit the length of tubing on any one port to 150 ft. (45.7m) (total length of sample and exhaust lines). Do not combine exhaust lines.

Instrument Flow Diagram

Figure 9 Single Channel Monitor

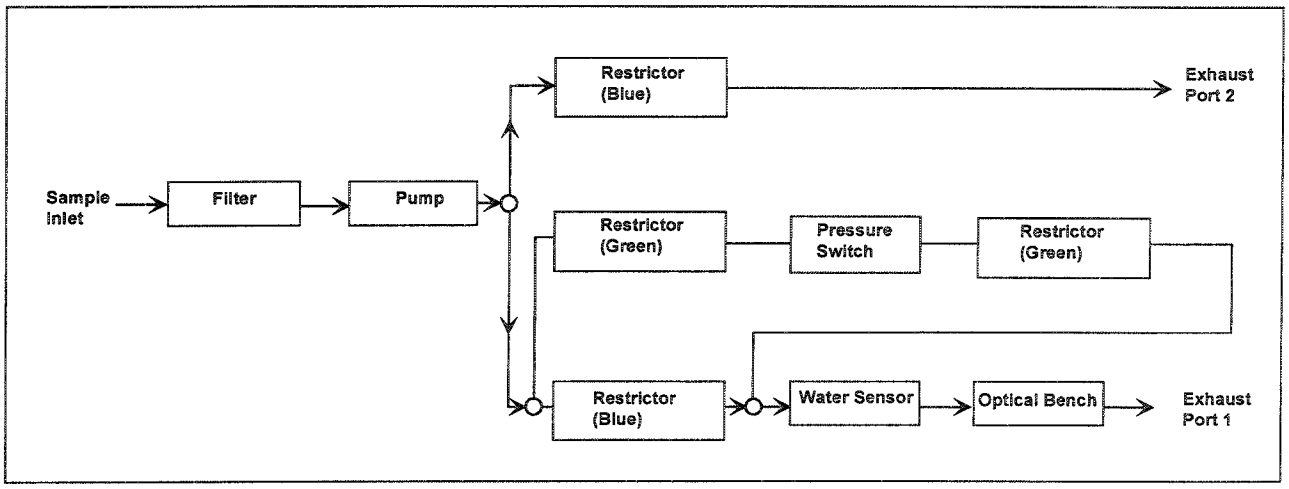

Monitor with 4 Channel Scanner

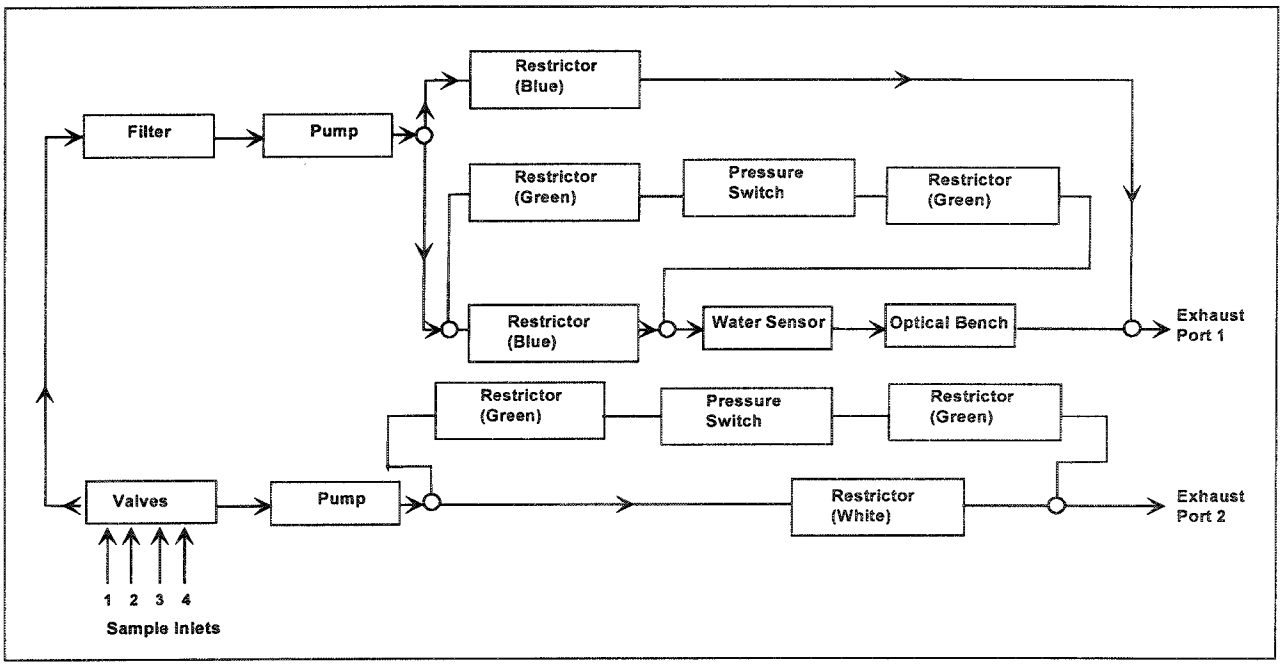

Notes:

1. Restrictor Orifice Diameter by Color Code:
   Green = 0.007"
   Blue = 0.020"
   White = 0.030"
2. Arrow on restrictor indicates flow direction

Module Diagnostic Messages

Display:	**Communication Lost With Module**
Description:	The clear language display (CLD), or UCP2 if no CLD is used, is not communicating with the monitor.
How does it affect unit operation:	Monitor will continue to operate in the READY mode. Alarm condition outputs will continue to be energized if ppm readings exceed setpoints. LED's on monitor will display correctly. This diagnostic does NOT cause the monitor to enter a Trouble Status condition. You can scroll through the CLD or UCP2 menu items and see the ppm readings for the data last collected before communication failure. The CLD may even read *READY* if that was the operating condition before the communication failure.
What causes the diagnostic:	The diagnostic is the result of a loss of communication with either the CLD or UCP2. In both cases the communication transfer is via wires connected to J15, terminals 1 and 2.
How to troubleshoot:	Check to be sure the wires are in place at the monitor and CLD, or UCP2. The connection points are J15, terminals 1 and 2. **Can not connect to both CUP2 and CLD.** If using twisted pair to the UCP2, be sure the cable shield is grounded at the UCP2. Check to be sure the connector and its screws are secure, at the monitor and CLD or UCP2. **Note:** Control is from UCP2 or Human Interface on the monitor but not both.
What components to test:	Clear Language Display Wiring - as described

Display:	**Trouble** (plus diagnostic message or channel data)
Description:	Malfunction of the monitor diagnosed by internal operational checks.
How does it affect unit operation:	Any diagnostic listed below causes the monitor to enter a *Trouble* Status condition. There are two levels of *Trouble*. Major, are those conditions that may result in inaccurate data collection. Minor, are those that are informational in nature but do NOT affect the accuracy of sample data measurements. A Major *Trouble* condition will result in turning On the red trouble LED, the Trouble relay switching, and the Clear Language Display (CLD) will flash when at the operating mode menu. Optional unit mounted alarm will sound if it was installed and if it is programmed. It can be quieted by pressing the + key (plus key). This optional alarm will NOT sound with Version 1.0 monitor software. A Minor *Trouble* condition will NOT turn on the red LED, sample measurements will continue, alarm conditions will be output. The CLD will flash trouble status but indicate *READY* mode, the green LED will indicate the same. Reset - If a Major diagnostic occurs during start-up, the unit must be turned OFF to reset after fixing the problem. Minor diagnostics will clear even if they occur during startup. If the diagnostic occurs during the Normal mode of operation then repair of the failure cause will reset the red LED and trouble relay, followed by the clearing of the CLD within 2 minutes. Refrigerant level alarms are disabled during Major *Trouble* diagnostic. Bench sampling and read-out continues during the *Trouble* condition
What causes the diagnostic:	Any of the following diagnostics put the monitor in this status condition: Major: RAM Loss, IR Source Fail, Chopper Fail, Temp Sensor Fail, Bench Flow Loss, Scan Flow Loss, Out Of Temp Rng, Rfgt Lvl to Low Minor: Aux Input Fail, Ext Reset Fail
How to troubleshoot:	See the individual diagnostics
What components to test:	See the individual diagnostics

Module Diagnostic Messages

Display:	RAM Loss
Description:	The monitor module has lost the data in its battery backed RAM.
How does it affect unit operation:	This diagnostic causes the monitor to enter a Major *Trouble* status condition. Monitor operation will be severely affected.
What causes the diagnostic:	The diagnostic occurs if the RAM information has been changed. *RAM loss* diagnostic occurs for one of two reasons: Could occur after programming the calibration coefficients into the memory through the factory setup menu. It could also occur in the event of RAM loss (possibly due to a battery failure on the main board).
How to troubleshoot:	Cycle power off, then back on to see if the message clears. After it clears a calibration should be performed to confirm accuracy. If calibration has deviated significantly, then one of the coefficients has probably changed and there would probably be other machine problems occurring. With the *RAM loss* condition, several of the menu items will be scrambled and not make sense.
What components to test:	Battery cannot be changed, monitor chassis assembly must be replaced.

Display:	IR Source Fail
Description:	The infra-red optical source has failed.
How does it affect unit operation:	This diagnostic causes the monitor to enter a Major *Trouble* status condition. The monitor operation will be severely affected. After power up, monitor will NOT cycle through start-up in its normal sequence. May display *Communication Lost With Module* on start-up. Sample reading may vary in the presence of refrigerant, but will NOT be accurate. Will reset without cycling power, even when problem occurs on start-up.
What causes the diagnostic:	Failure of the bench source light.
How to troubleshoot:	Cycle power off, then back on to see if the message clears. Check the resistance of the light source, wires located at the top of the bench near the motor. Label on the board is "Source". Resistance should be about 5 ohms across the light. If the resistance is significantly higher, i.e. 1K ohms, then the light has failed. Check the power at the Source terminals, one of the two terminals should read nominally 5.0 Vdc to ground.
What components to test:	Check unit circuit board wiring to source, near top of bench. Light cannot be changed, monitor chassis assembly must be replaced.

Display:	Chopper Fail
Description:	The optical Bench photo interrupter has failed.
How does it affect unit operation:	This diagnostic causes the monitor to enter a Major *Trouble* status condition. The monitor will display ppm but accuracy is affected. Will reset without cycling power, even when problem occurs on start-up.
What causes the diagnostic:	When the chopper blade stops or slows this diagnostic occurs
How to troubleshoot:	Chopper blade is fragile. When turned by hand, it is normally very resistant to rotation. It does NOT spin freely. Check wiring to the chopper motor. Listen for a bent chopper blade that might be rubbing
What components to test:	None Chopper motor, bench and printed circuit board must all be replaced as an assembly.

Module Diagnostic Messages

Display:	Temp Sensor Fail
Description:	The bench temperature sensor has failed.
How does it affect unit operation:	This diagnostic causes the monitor to enter a Major *Trouble* status condition. When viewing the Status Menu, the bench temperature will be blank. The monitor will display ppm but accuracy is affected because the temperature sensor determines how much heat to add to the bench. Will reset without cycling power, even when problem occurs on start-up.
What causes the diagnostic:	Failure of the bench temperature sensor, located on the upper right of the bench.
How to troubleshoot:	Check the wiring to the sensor, located at the upper right corner of the bench assembly, terminal labeled "Temp"
What components to test:	Check the resistance of the temperature sensor, after unplugging from the board: Red to Black = 7.5 Meg Ohms Red to Green = 7.5 Meg Ohms Black to Green = 40 K Ohms From top to bottom: Red, Black, Green

Display:	Scan Flow Loss
Description:	Flow loss through the bypass circuit of the scanner.
How does it affect unit operation:	This diagnostic causes the monitor to enter a Major *Trouble* Status condition. Bench sampling and read-out continue during the trouble condition, but accuracy could be affected due to flow problem.
What causes the diagnostic:	The diagnostic is the direct result of the incorrect signal being received from the scanner pressure switch. The scanner pressure switch simply reacts to the flow through the scanner bypass circuit by measuring the pressure drop across a restrictor in the hose. The switch makes and breaks as the flow changes. Pressure switch set-points are non-adjustable. There is an adjustment screw, but adjustment is NOT recommended. The switch contacts are normally open, and close above a pressure of 1.0 +/- 0.2 (0.8 to 1.2) inches water column. They will open again as the pressure drops below 0.5 inches water column. Normal scanner flow involves the scanner pump supplying a constant supply of sample air, plus the switching of the four scanner sequencer valves. Normal operation results in a constant flow to the exhaust port from three of the four inlets, bypassing the bench. During the start-up scanner flow sequence is not the same. Refer to the table representing the start-up sequence. You will find a one second period just before normal operation begins where all four scanner sequencer valves are directing flow to the bench which result in no flow at the scanner pressure switch. Therefore, simply jumpering the switch results in a scanner flow loss if the machine goes through startup.
How to troubleshoot:	Check components involved. Using voltmeter confirm 5.0 vdc to ground on black wire at the switch. With voltmeter on red wire and ground note cycling of switch during the one second cycle at startup. Then it should remain closed throughout the normal operation. Programming - If the monitor programming is set for a single channel with a scanner installed or vice-versa *Bench Flow Loss* will be indicated.
What components to test:	Wiring - verify that the pressure switch is connected to SCN PRSS terminal Leaks - especially on scanner units where the diagnostic has occurred on start-up. Pressure switch; Pump; Hoses and Restrictors; Filters Four Channel Sequencer valves - four channel scanner units only

Module Diagnostic Messages

Display:	Out of Temp Rng
Description:	The refrigerant monitor is out of the temperature range where it can measure refrigerant.
How does it affect unit operation:	This diagnostic causes the monitor to enter a Major *Trouble* status condition. If heater is disconnected or not working, the monitor will continuously stay in warm-up. The monitor will display ppm but accuracy is affected. Will reset without cycling power, even when problem occurs on start-up.
How to troubleshoot:	Troubleshoot the same as *Temp Sensor Fail*
What components to test:	None

Display:	Rfgt Lvl Too Low
Description:	The displayed refrigerant level is less that -4 ppm
How does it affect unit operation:	This diagnostic causes the monitor to enter a Major *Trouble* status condition. The monitor will display ppm but accuracy should be questioned. Will reset without cycling power, even when problem occurs on start-up
What causes the diagnostic:	When monitor displays a level less than -4 ppm
How to troubleshoot:	Vibration: Fluctuating readings from -200 to 0 have been observed. Remove the monitor from its location to verify vibration caused the diagnostic. Other vibration sources should also be investigated. Electrical radiated noise: Disconnect outputs and use an extension cord power supply from an alternate source to see if the noise source can be isolated. Look for intercoms, walkie talkies, switchgear, etc.

Display:	Rfgt Mon Fail
Description:	Severe problem with monitor.
How does it affect unit operation:	This diagnostic causes the monitor to enter a Major *Trouble* status condition. The monitor will display ppm but accuracy is affected. Will reset without cycling power, even when problem occurs on start-up.
What components to test:	None

Display:	Aux Input Fail
Description:	Auxiliary Input is not functioning.
How does it affect unit operation:	This diagnostic causes the monitor to enter a Minor *Trouble* status condition. The monitor will display ppm. Will reset without cycling power, even when problem occurs on start-up.
How to troubleshoot:	Uninstall Auxiliary input if one doesn't exist.
What components to test:	Check Auxiliary input wires.

Module Diagnostic Messages

Display:	Bench Flow Loss
Description:	Flow loss to the optical bench.
How does it affect unit operation:	This diagnostic causes the monitor to enter a *Trouble* Status condition. Bench sampling and read-out continue during the trouble condition, but accuracy could be affected due to flow problem. If Scan Flow Loss is also detected it will not be displayed until this condition has cleared.
What causes the diagnostic:	The diagnostic is the direct result of the incorrect signal being received from the bench pressure switch. The bench pressure switch simply reacts to the sample flow through the bench by measuring the pressure drop across a restrictor in the hose. The switch makes and breaks as the flow cycles. Pressure switch set-points are non-adjustable. There is an adjustment screw, but adjustment is NOT recommended. The switch contacts are normally open, and close above a pressure of 1.0 +/- 0.2 (0.8 to 1.2) inches water column. They will open again as the pressure drops below 0.5 inches water column. Normal bench flow involves the bench pump supplying a constant supply of sample air, plus the bench inlet and outlet solenoids opening and closing. Normal operation results in a constant flow to the exhaust port, bypassing the bench, plus a 3.5 second flow, and 3.5 seconds no flow through the bench itself. During the start-up bench flow sequence is not the same. Also, this sequence varies for a scanner or single channel monitor. Refer to Table 1 for single point units and Table 2 for scanner units start-up sequence for both units.
How to troubleshoot:	Check components involved. Using voltmeter confirm 5.0 vdc to ground on black wire at the switch. With voltmeter on red wire and ground note cycling of switch in 3.5 second intervals, open - closed - open... At the same time as you are watching the switch action, using a glass of water watch for the flow - no flow - flow cycling from the hose leaving the bench by observing the bubble activity. On single circuit machines this can be checked at exhaust port one. Four channel units require disassembling the hose at exhaust port one to separate the bench hose. Programming - If the monitor programming is set for a single channel with a scanner installed or vice-versa *Bench Flow Loss* will be indicated. Refer to the Bench Flow Loss section of this guide.
What components to test:	Wiring - verify that the pressure switch is connected to SMP terminal Leaks - especially on scanner units where the diagnostic has occurred on start-up. Pay particular attention to the hose from the four sequencer valves to the bench pump. Pressure switch; Pump; Hoses and Restrictors; Filters Four Channel Sequencer valves - four channel scanner units only

Display:	Ext Reset Fail
Description:	The external reset switch has failed or the jumper is missing.
How does it affect unit operation:	This diagnostic causes the monitor to enter a Minor *Trouble* Status condition,. All latching alarms will act as non-latching. Bench sampling, readout, and alarms continue during this trouble condition. The internal red LED labeled trouble is NOT turned on because the monitor remains in the *READY* mode.
What causes the diagnostic:	The diagnostic is the direct result of the incorrect signal being received from the INPUT terminals. The correct signal is provided by a normally closed contact or jumper wire.
How to troubleshoot:	Check to be sure the jumper wire is in place if no external reset switch has been installed. The connection points are J16, terminals 1 and 2. Check to be sure the connector and its screws are secure. If an external switch is installed, using voltmeter confirm that the resistance across these terminals is zero.
What components to test:	Wiring - check as above External reset switch (normally closed switch), not provided by Trane

Quick Problem Checks

A. Bench flow loss - Check installation to be sure all lines are open at the bottom of the panel. In this order:

1. Inspect switches and tubing for kinks and cracks.

2a. Bench pressure switch will open and close during normal operation. 0 and 5 volts d.c. (switching) will be seen on a voltmeter by placing leads on the terminals of the pressure switch.

2b. Scanner pressure switch (scanner unit only) must be closed all the time.

3. Are the restrictors installed in the right direction? Arrow indicates flow. See Figure 9 for details.

4. After switches and tubing are checked, look at the pump. Rotate to insure the crank is not rubbing anywhere.

5. Remove cover from bench and listen for solenoid activity. Should be switching Open / Close during a 7 second cycle.

6. Using a glass of water, observe the bubble activity at the exhaust ports (see Figure 10). Port 1 should be cycling on / off, Port 2 should be nearly constant. (Single point monitor only.)

7. Is the monitor programmed properly, check if scanner is installed, or not. Then re-start.

Notes: Bench Flow Loss display does not clear the display immediately, but it does clear itself after two minutes. If in doubt as to whether or not the condition has cleared, observe the LED trouble light on the circuit board. It will turn off immediately after the problem has cleared.

Figure 10 - Measuring bubble activity, see step 6.

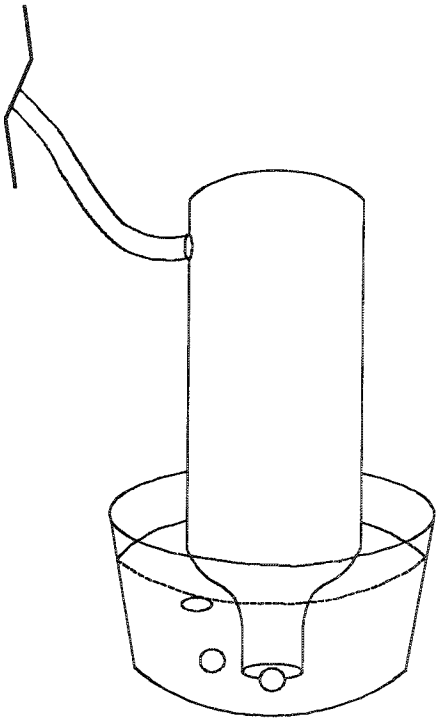

Quick Problem Checks

If a bench flow loss condition occurs during start-up (warm-up) it will be necessary to power-down and restart the monitor to clear the diagnostic.

Bench flow loss will occur on a four channel monitor programmed for single channel operation because the four scanner channels are all blocking airflow to the bench circuit. To avoid this problem, program properly or remove the bench circuit inlet tube from the left side of the four solenoids.

Check bench flow problems by measuring flow through the bench circuit. During the 3.5 second cycle, flow can be grossly checked with use of a bottle cap (approximately 1-1⁄8 inch diameter), or a soda bottle (approximately 3/4 inch diameter). The following bubble rates per 3.5 second cycle can be expected:

	Flow Loss	Normal Flow
Bottle Cap	2	6
Bottle	4	8

See Figure 10.

B. Refrigerant level too low - If the output is erratic and bounces from a low reading to a normal reading, suspect problems resulting from either vibration or radiated electrical noise. See **Module Diagnostic Messages** for further information.

C. Refrigerant Conversion - The monitor can not be converted from one refrigerant to another in the field - it must be sent back to the factory for recalibration.

D. Diagnostic Conditions - Any diagnostic condition causes a "Trouble Status" condition on the monitor. The Trouble relay closes and the front display flashes when at the Operating Mode menu. Optional unit mounted alarm will sound if it is installed and programmed. Pressing the "+" key will quiet the alarm. Refrigerant level alarms are disabled. Bench sampling and readout continue during the trouble condition.

Table 3 - Diagnostic Relay Conditions

Condition	Normally Open Contacts	Normally Closed Contacts
Off	Open	Closed
On - Ready	Closed	Open
Trouble	Open	Closed

Calibration Procedure

Introduction

This section details the recommended field calibration check procedure for the Trane Model RMWD refrigerant monitor. The monitor is factory calibrated for the specific refrigerant desired however, it is recommended that the calibration be checked annually at a minimum, and a log kept detailing any adjustments required. The appropriate Installation, Operation and Maintenance manuals for this instrument should be referenced to assist in operating the display and identifying components or connection points.

General Information

- Kit TOL 0170 includes:
  - regulator
  - span gas scrubber (FLR 1404)
  - zero scrubber (FLR 1403)
  - connecting tubing and fittings
  - carrying case and instructions (calibration gas **is not** included)
- Calibration gas -
  - R-11: TOL 0171
  - R-22: TOL 0172
  - R-123: TOL 0173
  - R-134A: TOL 0174
  - zero gas: TOL 0175

The RMWD test regulator releases just over 2.0 liters per minute. A 100 liter bottle would last about 50 minutes.

The used calibration gas canisters and the various filters are not considered hazardous waste due to the small concentration of refrigerant. If a large number of canisters or filters were being dumped, this might be an issue and require further investigation. Local codes apply.

Calibration Procedure

Material Required

1. Trane Calibration Kit containing:
   - Zero Gas Scrubber
   - Flow Regulator
   - Interconnecting Tubing and Fittings
   - Span Gas Scrubber
   - Carrying Case
2. A canister of the specific refrigerant span gas

Ths calibration check should be performed only by qualified personnel familiar with the instrument and its operation.

⚠ Warning!
During the calibration procedure, the monitor is not in service and any alarms that may occur during the calibration sequence will not be recognized. This could create a hazardous condition.

Preparing for Calibration

1. Ensure the area surrounding the monitor is free from any gas hazard. Operate permanent or portable ventilation as necessary.
2. Access the calibration menu using the display located on the unit front panel. See the Installation, Operation and Maintenance manual for details on the use of the monitor's various menus.
3. Page through the display by pressing <Next> until you get to the "Calibration" main menu. Press <Enter> to begin calibration check routine.
4. Enter the Field Calibration password, " - + - - + + ".
5. The monitor will go into the Monitor Check Mode and the refrigerant concentration based on the current unit calibration will be displayed. All new alarms will not be recognized.
6. Remove the gas sampling tube from the monitor sample inlet. Disconnect sample channel #1 if a scanner is installed.

Zero Calibration Check

1. The first routine is used to check the unit Zero calibration. Press <Next> to proceed to the Refrigerant Zero screen. Press <Enter> to begin Zero Calibration. The display will read "Starting Cal, Please Wait". If a channel scanner is installed, it will be locked onto channel #1. Refer to Figure 11 for connection information.

Note: Either a Zero Gas Scrubber or a canister of Zero gas can be used to check the zero setting on a Model RMWD monitor.

2. When the "Connect Zero Gas" screen is displayed, connect the Zero Gas Scrubber or the Zero Gas Canister to the (continued) sample port on the monitor as shown in Figure 11. Use sample port #1 if a scanner is installed. Press <Next> to continue.

⚠ Caution:
Be sure Zero Scrubber is used and not Span Gas Scrubber.

Note: If a Zero Gas canister is used, connect as shown in Figure 11 except substitute Zero canister for Span Gas canister. A Span Gas scrubber must be used whenever pressure gas is applied to the unit to avoid over pressurization.

Calibration Procedure

3. "Open Valve" will be displayed. If the Zero gas canister is used, open the regulator to allow gas to flow. If a scrubber is being used, disregard this step. Press <Next> to continue to Step 4.
4. The next screen will display the sample concentration based on the current unit calibration. After waiting at least three minutes, press <Enter> to adjust zero setting. If reading is zero, press <Cancel> twice to exit Zero calibration routine and move to Refrigerant Span routine.
5. If <Enter> was pressed to adjust, the unit will lock onto the reading. Use the (+) and (-) keys to adjust displayed reading to zero. Press <Enter> when finished. Monitor will store new Zero setting.
6. Either "Successful Calibration" or "Cal Failed" will be displayed. If calibration was successful, the display will proceed to the Span Calibration. If calibration failed, the unit will revert back to the previous zero value. Press <Enter> to repeat Zero Calibration. Shut off Zero Gas flow if canister is being used.

Refrigerant Span Calibration Check

1. At the "Refrigerant Span" screen, press <Enter> to Calibrate. The display will read "Starting Cal Please Wait". Refer to Figure 12 for connection information.
2. Connect the Span Gas canister to Sample Port #1 when the display prompts you to do so. Also, remove any caps on the span gas scrubber. Press <Next> to continue.
3. Open the regulator valve when instructed and press <Next> to continue.
4. After at least three minutes and the displayed value is stable, compare the displayed PPM value to what is listed on the calibration span gas canister. If the displayed value differs from the value on the canister, press (+) or (-) to change the displayed value to match to match the calibration gas value. Press <Enter> to continue. The display will read "Starting Cal".

Calibration Procedure

5. Either "Successful Calibration" or "Cal Failed" will be displayed. If the calibration was successful, the new span values have been stored and will be used for all future readings. Press <Next> three times then <Enter> to return the instrument to operation. If the Calibration failed, the monitor will revert back to the values previously stored. Press <Enter> to retry span calibration.
6. Disconnect the span gas canister and connect all sample lines that may have been removed. Unit is ready to be put back into service.
7. Log the date and note any adjustments made on a monitor calibration log.
8. Return all parts to the Calibration Kit carrying case.

Figure 11 - Zero Calibaration Check Connections

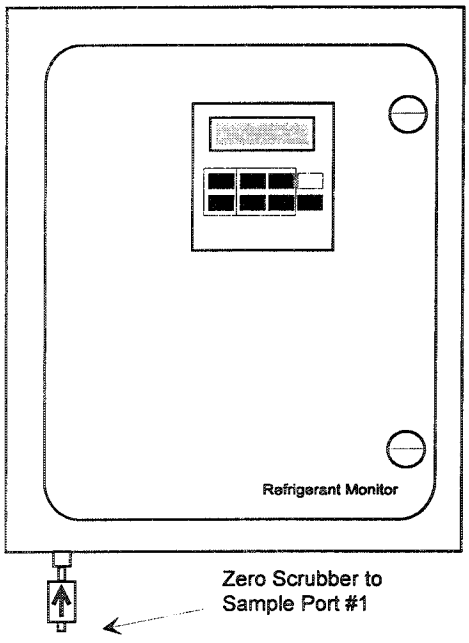

Figure 12 - Span Calibration Check Connections

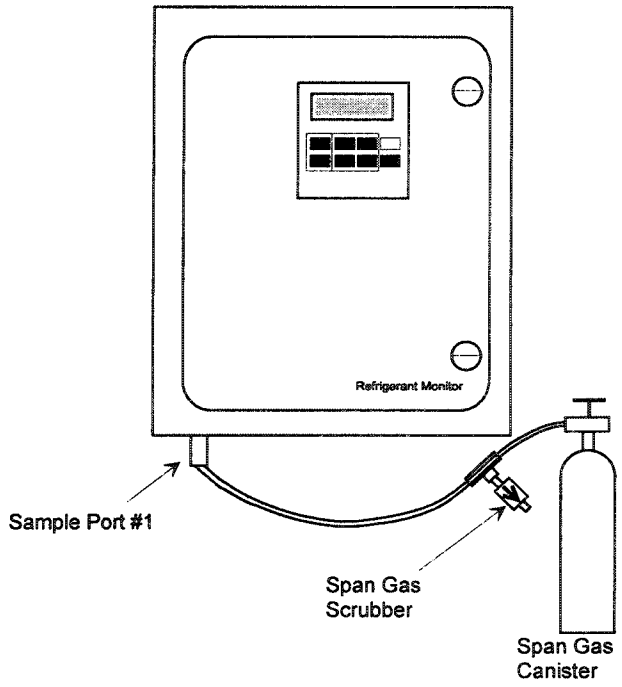

Note: If Zero Gas is used, connect canister to Sample Port #1 using connect arrangement similar to what is shown in Figure (Span), substituting the Zero Canister for the Span Canister and the Zero Scrubber for Span Gas Scrubber.

Pressure Switch Checkout

Testing Procedure

Equipment

- Pressure Gauge 0 - 3 inches H_20 range
- Pressure Source
- Ohm Meter
- Tubing Harness shown below

Setup

See Figure 13

Procedure

1. Connect tubing to high pressure port of switch.
2. Use syringe to vary pressure in range of 0 - 3.0 inches H_20 four times.
3. Return pressure to zero.
4. Gradually apply pressure until ohm meter indicates closure of switch.
5. Note pressure that is required to generate closure. Pressure must be > 0.8 inches H_20 open and < 1.2 inches H_20 closed.
6. Increase pressure to 2.0 inches H_20.
   Note: Contact resistance at 2 inches H_20 is <= 50 ohms.
7. Reject a switch which does not meet specifications in steps 5 and 6.

Figure 13 - Pressure Switch Testing Equipment

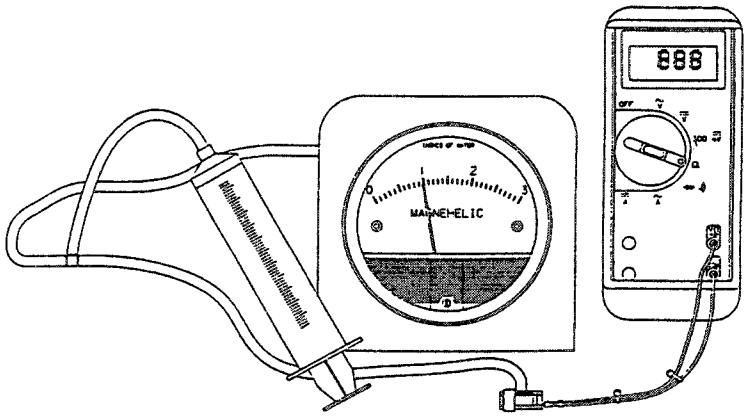

Figure 14 - Pump clearances

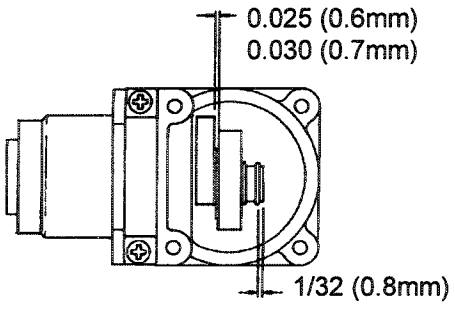

Technical Specifications

Mechanical

Enclosure

NEMA-4 rated. Hinged door with 2 quarter-turn latches. Beige with black face plate.

Mounting

4 mounting tabs provided on back of enclosure.

Weight

Single channel unit = 42 lbs. operating, 45 lbs. shipping. 4-channel scanner unit= 45 lbs. operating, 49 lbs. shipping.

Sample Pumping Rate

0.75 LPM minimum with 150 feet of 1/8" ID sample tubing.

Electrical

Inputs

Power Input - The refrigerant monitor will operate from a source of AC power of 100 VAC to 240 VAC, 50 to 60 Hz. Power input not to exceed 80 watts in single channel operation.

Auxiliary Input - 4 to 20 mA Input referenced to ground. Input impedance is 200 (±4) Ω resistive.

Remote Reset - An input will be provided to remotely reset latched alarm relay(s). On activation, all latched alarms will be reset. Maximum distance from monitor to contacts is 300 feet using shielded 18 AWG twisted pair wire.

Outputs

Analog - Two analog outputs are provided to indicate refrigerant gas concentration. These outputs may be used independently and simultaneously.

Ranging for both outputs is common.

Ranges selectable by software:
0 to 100 PPM
0 to 1000 PPM

The resolution on each range is 1 PPM.

4 to 20 mA: Sourcing current to module ground. Load = 200 ohms maximum.

0 to 10 VDC: Sourcing referenced to module ground. Output current to 7 mA maximum.

Relays - Relay contact ratings are as follows:

Resistive load:
-7.2 Amps @120 VAC
-5.0 Amps @240 VAC

Inductive load:
-2.88 Amps Pilot Duty
-1/3 HP, 7.2 FLA, 43.2 LRA

Audible alarm output:
12 VDC, 100Ω load maximum

Gas Sensing Characteristics

Gas Sensitivity

Standard factory calibration for HCFC-123, CFC-11, HCFC-22 and HFC-134a. Special factory calibrations for other refrigerants are available.

Alarm levels

Alarm levels are software adjustable in steps of 1 PPM over the following ranges:

Alarm Levels:

HCFC-123	Low Limit	High Limit
Alarm Level #1	3 PPM	Lowest of 30 PPM or Alarm Level #2 -1
Alarm Level #2	Alarm Level #1 + 1	Alarm Level #3 - 1
Alarm Level #3	Alarm Level #2 +1	1000 PPM

All other refrigerants	Low Limit	High Limit
Alarm Level #1	3 PPM	Alarm Level #2 -1
Alarm Level #2	Alarm Level #1 + 1	Alarm Level #3 - 1
Alarm Level #3	Alarm Level #2 +1	1000 PPM

TOL-90
CTV Solid State
Overload Tester
Instruction Manual

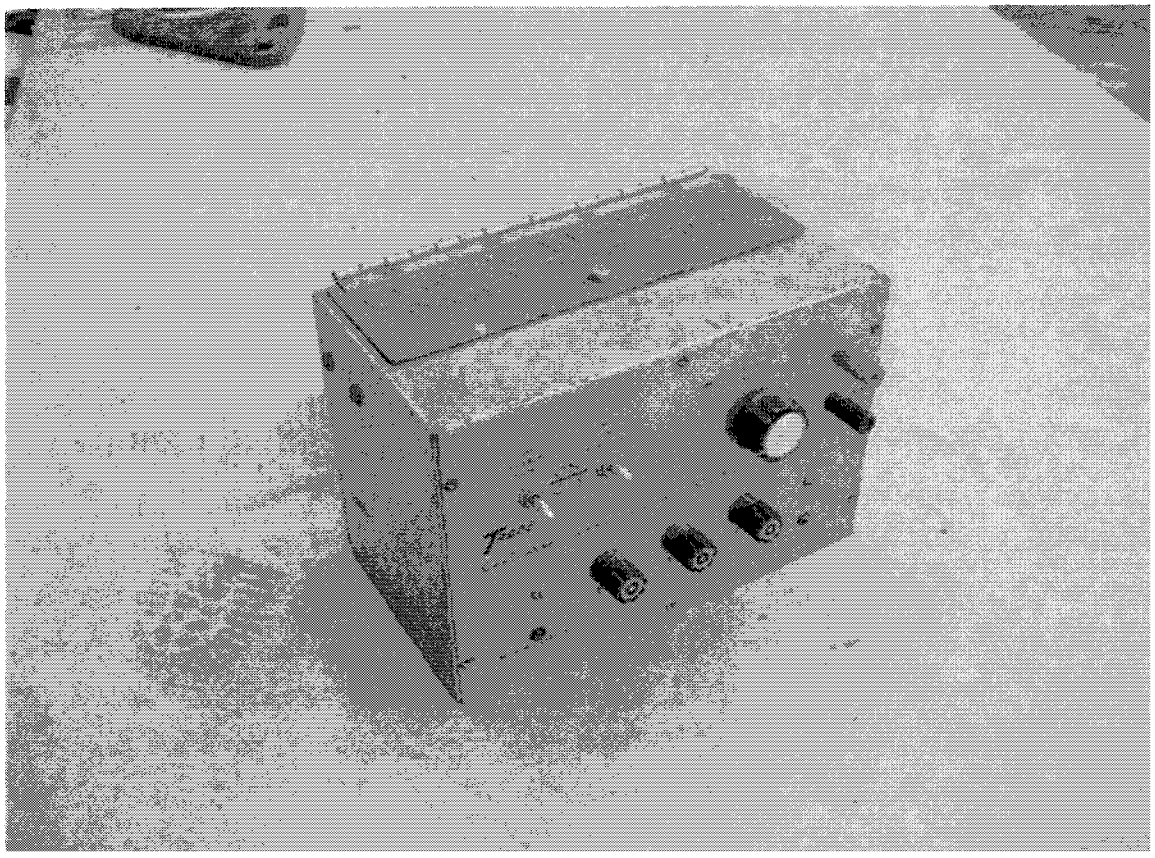



INTRODUCTION

The TOL-90 Solid State Overload Tester:

- Simulates any level of motor current from zero to ten times the rated load amps(RLA).
- Simulates the operation of the 1M motor contactor auxiliary.
- Gives visual indication of "overload" trip due to either excessive locked rotor current or motor running current.
- Gives visual indication of distribution fault trip.

The motor current is simulated by placing a variable DC test voltage across the B1-B2 terminals of the SSOL, in place of the current calibrator. This test voltage is referred to as the "current signal." NOTE: A DIGITAL VOLTMETER IS REQUIRED TO READ THIS TEST VOLTAGE. The magnitude of this "current signal" is such that 100 percent RLA = 1.00 VDC and is directly proportional to motor current draw(See FIG. 1). The source for this voltage is the +15 VDC power supply in the SSOL. The ON-OFF switch(SW1) is a means of turning off the current signal.

The 1M contactor auxiliary is simulated by a manually operated toggle switch(SW2).

The "Overload" and "Distribution Fault" trip indicators are powered by the same SSOL outputs that trip their respective circuit breakers. An overload is indicated by a steady glowing light. A distribution fault is indicated by a flashing light due to the pulsed output from the SSOL.

RECOMMENDED TEST EQUIPMENT

1. Digital Voltmeter - (Required)
2. Clamp-on Ammeter
3. Timer or Clock with second hand

Refer to Service Bulletin CTV-SB-22A for additional information regarding the SSOL.

TABLE OF CONTENTS

OPERATING INSTRUCTIONS

Preliminary Measurements ..... Page 3

FUNCTIONAL TESTS

Set Up ..... Page 5
Acceleration Time Limit(60 HZ) ..... Page 7
Acceleration Time Limit(50 HZ) ..... Page 7
Locked Rotor Trip Level ..... Page 7
Transition Level ..... Page 8
Motor Overload Trip Level ..... Page 8
Motor Overload Trip Level with 10% Jumper Removed ..... Page 8
Distribution Fault Trip Level ..... Page 9
Load Proportional DC Voltage Signal ..... Page 9

DRY RUNNING A STARTER

Set Up ..... Page 10
Test Procedure ..... Page 10

"CLEAN-UP" CHECKLIST ..... Page 11

CTV SOLID STATE OVERLOAD TEST FORM

To Aid in Recording System Data and Test Results ..... Page 12

OPERATING INSTRUCTIONS

Prior to testing, fill in the General Information Section on the test form (page 12) as completely as possible. The following tests correspond to the bottom half of the test form.

CAUTION: WHEN PERFORMING THE FOLLOWING TESTS, DO NOT SHORT THE OUTPUT TERMINALS E1-E2, F1-F2, or F3-F4 TOGETHER AS DAMAGE TO THE SSOL COULD RESULT.

PRELIMINARY MEASUREMENTS

Note: Measurements A, B, and C can be made only if the system is in operation.

A. If possible, measure and record motor running current using a clamp-on ammeter.

B. At the same time that the motor running current is measured(above), measure and record the DC voltage across the "current calibrator" resistor at terminals B1 and B2 on the SSOL, using a digital voltmeter.

C. Divide measurement "A" by measurement "B" to obtain a multiplier in AMPS/VDC. This multiplier should equal the motor RLA if the current transformers and current calibrators are selected properly. This multiplier can be used to obtain the actual current values corresponding to the DC voltage readings obtained in the Functional Tests(part II)by taking(DC voltage from test form) x (multiplier) = actual motor current.

D. Measure and record the voltage between terminals XX1 and X2 on the SSOL. This is a nominal 115 VAC and is required for the operation of the SSOL.

E. Measure and record the voltage between the +15 terminal on the "swing out" board and B2. NOTE: If the SSOL is not equipped with a swing-out board, the +15 output can be measured between the cathode(designated by a silver stripe) of DIODE D19 located on the main printed circuit board and terminal B2. This voltage should be between +14.25 VDC and +15.75 VDC. If this voltage is out of tolerance, the SSOL will probably fail the Functional Tests and require replacement.

F. Measure and record the voltage between the -15 terminal on the "swing out" board and B2. NOTE: If the SSOL is not equipped with a swing out board, the -15 output can be measured between the anode(end opposite of the silver stripe) of DIODE D18 located on the main printed circuit board and terminal B2. This voltage should be between -14.25 VDC and -15.75 VDC. If this voltage is out of tolerance, the SSOL will probably fail the Functional Tests and require replacement.

FIGURE 1

FUNCTION	NOMINAL CURRENT LEVEL (% of RLA)	VOLTAGE ACROSS CURRENT CALIBRATOR (B1 - B2)
Maximum Locked Rotor Trip Setting	1070%	10.70 VDC
Typical Locked Rotor Amps(LRA)	250%	2.50 VDC
Motor Overload Trip Level	107%	1.07 VDC*
Motor Rated Load Amps(RLA)	100%	1.00 VDC
Motor Starter Transition Level	85%	0.85 VDC*
Distribution Fault Trip Level	20%	0.20 VDC*
Motor De-energized	0%	0.00 VDC

* Actual measured test voltage may vary slightly from values indicated. Refer to the corresponding test instructions for details.

FUNCTIONAL TESTS

SET UP

1. Disconnect the wires from terminals S1 and D1 on the SSOL.

   WARNING: THESE WIRES MUST BE DISCONNECTED TO PREVENT THE COMPRESSOR MOTOR FROM STARTING DURING THE TEST SEQUENCE.

2. Make sure that the safety trip indicators on the control panel and starter are tripped to prevent accidental startup.

3. Remove the current calibrator resistor from terminals B1 and B2 on the SSOL.

4. Connect the leads from the TOL-90 to the matching terminals on the SSOL and on the "swing out" board(refer to Figure 2). It may be necessary to loosen the terminal screws on the SSOL. NOTE: If the SSOL is not equipped with a "swing out" distribution fault board, leave leads F3 and F4 unconnected while connecting lead +15 to the cathode(designated by a silver strip) of Diode D19 on the main printed circuit board.

5. Connect the positive(+) lead of a digital voltmeter to the test point on the TOL-90 labeled B1 and the negative(-) lead to the test point laveled B2. Set the voltmeter on the 20 VDC scale.

6. Energize the SSOL by applying 115 VAC at terminals XX1 and X2.

FIG. 2 - TOL-90 CTV SSOL TESTER HOOKUP DIAGRAM

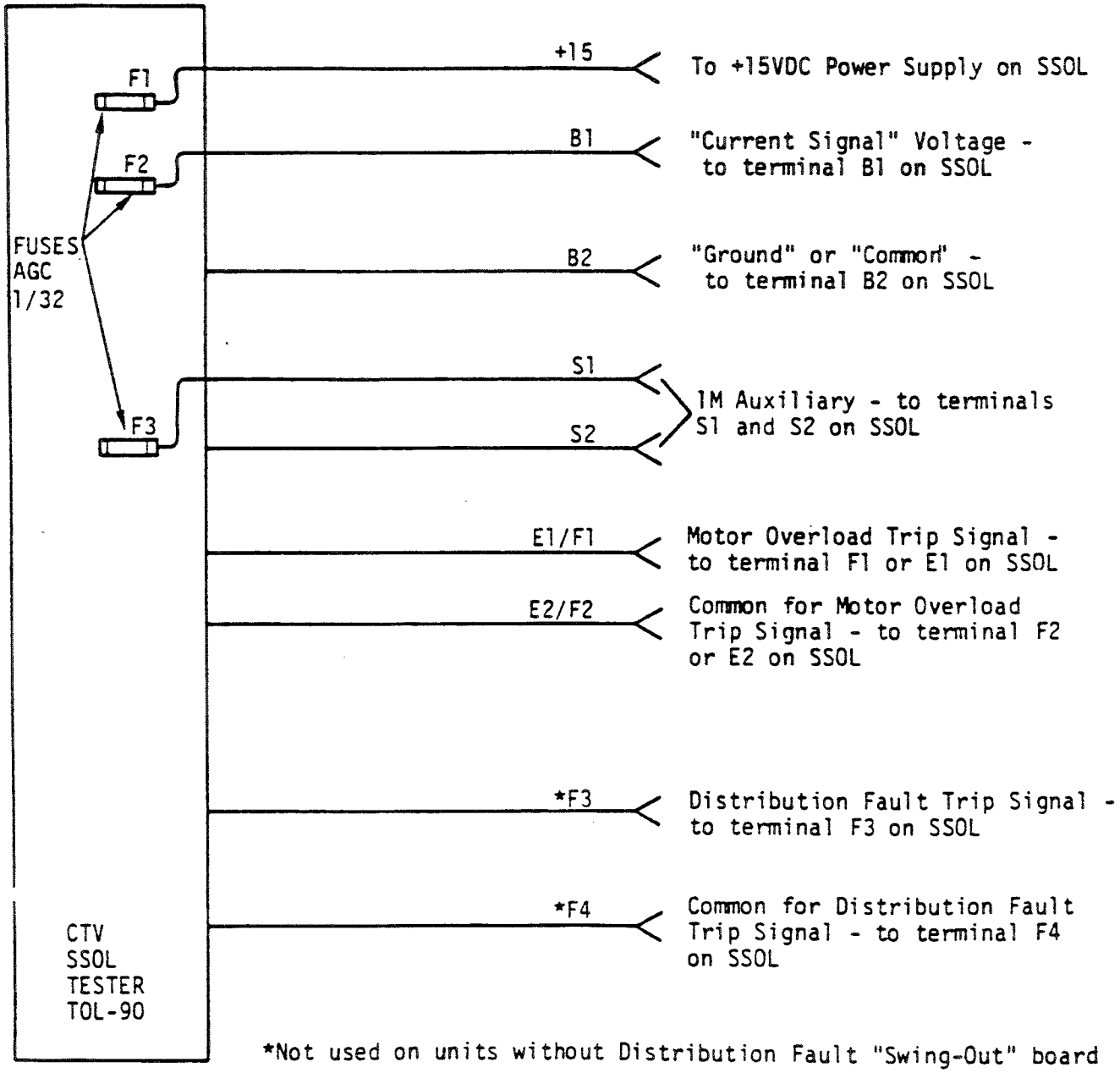

*Not used on units without Distribution Fault "Swing-Out" board

FUNCTIONAL TESTS

A. Acceleration Time Limit(60 HZ)

1. Set the frequency adjustment switch on the SSOL to 60 Hz.

2. Set DVM on 20 VDC scale.

3. Turn SW2 OFF.

4. Turn SW1 ON.

5. Turn "current signal adjust" knob until DVM reads approximately 2.0 VDC.

6. Set maximum acceleration time switch on SSOL to desired setting.

7. Turn SW2 on. The "motor overload" LED should light after the time set in step 6 has elapsed.

8. Record the actual time observed(test form part II).

B. Acceleration Time Limit(50 Hz)

1. Set the frequency adjustment switch on the SSOL to 50 Hz.

2. Repeat steps 2 through 8 from test "A".

3. Return frequency adjustment switch to its normal position.

C. Locked Rotor Trip Level

1. Set the maximum acceleration time limit switch on the SSOL to maximum setting(all switches on). This should allow 63 seconds to perform this test prior to a "motor overload" indication due to the acceleration time limit.

2. Turn SW2 OFF.

3. Set DVM on 20 VDC scale.

4. Turn SW1 ON.

5. Adjust the "current signal" until the DVM reads approximately 1.5 VDC or greater.

6. Turn SW2 ON.(The acceleration time limit is now in effect.)

7. Increase the "current signal" until the "motor overload" LED lights. This indicates that the locked rotor trip level has been exceeded. If the acceleration time limit is exceeded in this step, it can be reset by turning SW2 OFF and then ON again.

8. Record the trip level DC voltage obtained in step 7. Multiplying this value by 100 will give the percentage of RLA. For example, a reading of 6.50 VDC corresponds to 650% of RLA. This should be roughly equivalent to the setting of the LRA set potentiometer on the SSOL.

FUNCTIONAL TESTS(con't)

D. Transition Level

1. Turn SW2 OFF.

2. Turn SW1 ON.

3. Adjust the "current signal" until the DVM reads approximately 1.20 VDC.

4. Turn SW2 ON.

5. Slowly reduce the "current signal". Listen and watch for the transition relay on the SSOL to pull in and note the DVM reading.

6. Record the reading on the test form. The SSOL should be set to transition at 85% of RLA. Due to the nature of the "current signal" during actual operation and the SSOL circuit design, the corresponding test voltage you should read is approximately .80 VDC $\pm$ .07 VDC.

E. Motor Overload Trip Level

1. Turn SW2 OFF.

2. Turn SW1 ON.

3. Adjust the "current signal" until the DVM reads approximately 0.60 VDC.

4. Turn SW2 ON. The transition relay on the SSOL should pull in after approximately one second.

5. Increase the "current signal". Note the DVM reading when the "motor overload" indicator lights.

6. Record the DVM reading noted in step 5. The SSOL should be set to trip at 107% of RLA. Due to the nature of the "current signal" during actual operation and the SSOL circuit design, the corresponding test voltage you should read is approximately 1.13 VDC $\pm$ .05 VDC.

F. Motor Overload Trip Level with 10% Jumper Removed

1. Remove the 10% jumper from terminals J1 and J2 on the SSOL.

2. Repeat steps 1 through 5 from test E.

3. Record the value obtained. It should be approximately 10% less than the value obtained in test E(1.02 VDC $\pm$ .05 VDC).

4. Reconnect the jumper to terminals J1 and J2 on the SSOL.

FUNCTIONAL TESTS(con't)

G. Distribution Fault Trip Level

1. Turn SW2 OFF.

2. Turn SW1 ON.

3. Adjust the "current signal" to approximately 0.50 VDC.

4. Turn SW2 ON. The transition relay on the SSOL should pull in after approximately one second.

5. Adjust the "current signal" slowly downward. Note the DVM reading when the "distribution fault" indicator lights.

6. Record the DVM reading noted in step 5. The SSOL should be set to trip at approximately 20% of RLA. Due to the nature of the "current signal" during actual operation and the SSOL circuit design, the corresponding test voltage you should read is approximately 0.18 VDC $\pm$ .05 VDC.

H. Load Proportional DC Voltage Signal

1. Turn SW1 ON.

2. Adjust the "current signal" until the DVM reads as close as possible to 1.000 VDC.

3. Remove the (+) voltmeter lead from the test point B1 and measure the voltage at terminal V1 on the SSOL. This voltage should read -8.25 VDC $\pm$ .20 VDC.

4. Recheck the "current signal" voltage at test point B1 to verify that it is still as close as possible to 1.000 VDC. If it is not, readjust the "current signal" and repeat step 3.

5. Record the final DVM reading obtained in Step 3.

DRY RUNNING A STARTER USING THE TOL-90

With the motor leads disconnected for the purpose of dry-running the starter, the TOL-90 can be used to simulate different current conditions in the motor. The "current signal" can be adjusted to verify starter transition as well as the operation of the motor overload and distribution fault circuit breakers.

WARNING: FAILURE TO DISCONNECT POWER BEFORE SERVICING COULD RESULT IN PERSONAL INJURY OR DEATH FROM ELECTRICAL SHOCK.

1. After the power to the starter has been disconnected, disconnect the motor leads and properly isolate them. These leads could be energized while dry running the starter.

2. DO NOT disconnect any control wiring from the SSOL. If any wiring was disconnected for prior tests, reconnect it before proceeding.

3. Remove the current calibrator resistor from terminals B1 and B2 on the SSOL.

4. Connect leads +15, B1 and B2 of the TOL-90 to the SSOL. F1, F2, F3 and F4 may be connected if visual indication of motor overload and distribution fault is desired.

5. Connect a DVM to the B1(+) and B2(-) test points on the TOL-90.

TEST PROCEDURES

1. Close the disconnect or circuit breaker to apply power to the starter and SSOL.

2. Turn SW1 ON.

3. Adjust the "current signal" to approximately 1.50 VDC or to a value corresponding to the calculated LRA(See Figure 1).

4. Provide a start signal to the starter.

5. Reduce the "current signal" to approximately 0.70 VDC and verify that transition occurs.

6. Increase the "current signal" to approximately 1.25 VDC and verify that the motor overload circuit breaker trips.

7. Repeat steps 1 through 5.

8. Turn SW1 OFF and verify that the distribution fault circuit breaker trips.

9. De-energize the starter and the SSOL.

10. Remove the TOL-90 and reconnect the current calibrator resistor to terminals B1 and B2 on the SSOL.

CLEAN-UP CHECKLIST

1. Set frequency adjustment switch on SSOL to desired setting(50/60 Hz).
2. Set maximum acceleration time switch on SSOL to desired setting.
3. Reconnect the current calibrator resistor to terminals B1 and B2 on the SSOL.
4. Reconnect the wires to terminals S1 and D1 on the SSOL.
5. Reconnect the "10% jumper" to terminals J1 and J2 on the SSOL, if required.

CENTRAVAC SOLID STATE OVERLOAD

TEST FORM

GENERAL INFORMATION:

CenTraVac:

Model # _____

Serial # _____

Sales Order # _____

Starter:

Type _____

Vendor _____

Model # _____

Serial # _____

Solid State Overload:

Number from Nameplate _____

Current Calibrator # _____

Current Calibrator Setting _____Ohms

Locked Rotor Trip Setting _____%

Acceleration Time Limit Setting _____sec.

Motor Nameplate Data

RLA _____Amps

LRA _____Amps

(LRA/RLA) _____

Voltage _____

Current Transformer Ratio _____

Actual Line Voltage _____Volts

Frequency _____Hz

TEST DATA:

I. Preliminary Measurements:

A. Motor Running Current _____Amps

B. Corresponding DC Voltage Across Current Calibrator _____VDC

C. Multiplier (A/B) _____Amps/VDC

D. Voltage from XX1 to X2 _____VAC

E. Voltage from +15 to GND _____VDC

F. Voltage from -15 to GND _____VDC

II. Functional Tests:

A. Acceleration Time Limit (60 Hz) _____sec.

B. Acceleration Time Limit (50 Hz) _____sec.

C. Locked Rotor Trip Level _____VDC

D. Transition Level _____VDC

E. Motor Overload Trip Level _____VDC

F. Motor Overload Trip Level with 10% Jumper Removed _____VDC

G. Distribution Fault Trip Level _____VDC

H. Voltage from V1 to V2 @ 1.000 VDC from B1 to B2 _____VDC

TRANE™

Installation Operation Maintenance

Ordering No.	**MPCA-IOM-1A**
Library	**Service Literature**
Product Section	**Refrigeration**
Product	**CenTraVac®— Liquid Chillers**
Model	**MPCA**
Literature Type	**IOM**
Sequence	**1A**
Date	**March 1984**
File No.	**SV-RF-CTV-MPCA-IOM-1A-384**
Supersedes	**MPCA-IOM-1 381**

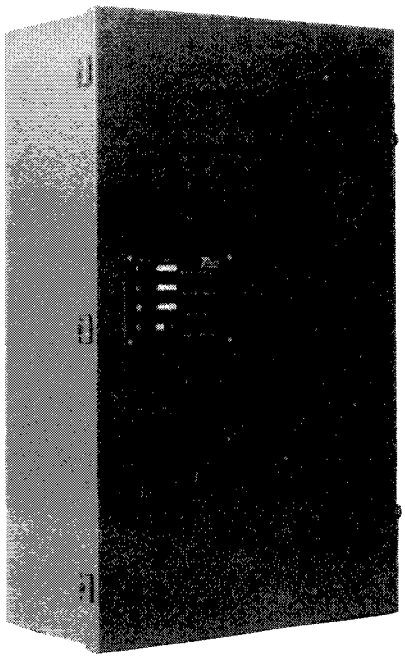

CENTRAVAC® MOTOR STARTER PROTECTION SYSTEM

LIQUID CHILLERS - CENTRIFUGAL

ELECTRIC DRIVE - CENTRAVAC®

TABLE OF CONTENTS

ITEM	PAGE
Operation	2
Shipment	3
Installation	3
Wiring	4
Calibration	9
Dry Run	14
Trouble Analysis	14
Auto Restart Installation (Optional)	14

© THE TRANE COMPANY 1984
COMMERCIAL SYSTEMS GROUP
LA CROSSE, WISCONSIN 54601-7599
PRINTED IN U.S.A.

OPERATION

The Trane Motor Starter Protection System was developed to make it possible for the owners of existing Trane CenTraVacs® to upgrade their CenTraVac starters to obtain the protection, safety, and reliability available from the current state-of-the-art in starter design. CenTraVac starters equipped with the MSPS provide improved protection to the motor, and to the starter itself, from the harmful effects of disturbances in incoming electrical power, and from possible malfunctions of the CenTraVac starter or controls.

The Motor Starter Protection System provides protection against occurrances that cannot be detected or corrected by earlier starters. Also, it provides more positive, accurate, and faster response to other occurrances that were protected against in the original equipment. Equipped with the MSPS, an existing Trane CenTraVac is afforded all of the protection available in the latest models of Trane equipment.

The Motor Starter Protection System provides the following benefits:

A. Protection against momentary interruptions to incoming power (distribution fault). Interruptions can cause serious equipment damage, and could not be detected in previous types of starters.
B. Provides accurate and repeatable overload protection at rated load current. Overloads previously provided have been shown to lack repeatability, and failed to provide adequate protection.
C. Provides accurate overload protection at locked rotor current during equipment startup.
D. Provides positive initiation of disconnect if the motor requires excessive time to accelerate to full speed.
E. Provides initiation of positive disconnect if the starter requires excessive time to make transition from start to run modes.
F. Provides positive protection against low line voltage.
G. Provides inherent protection against several possible malfunctions in the starter control circuit.

A. Distribution Fault Circuit Breaker Operation

A distribution fault is defined as a loss of line voltage for less than 60 electrical cycles. This type of short duration power interruption can be damaging to many types of induction motor driven equipment.

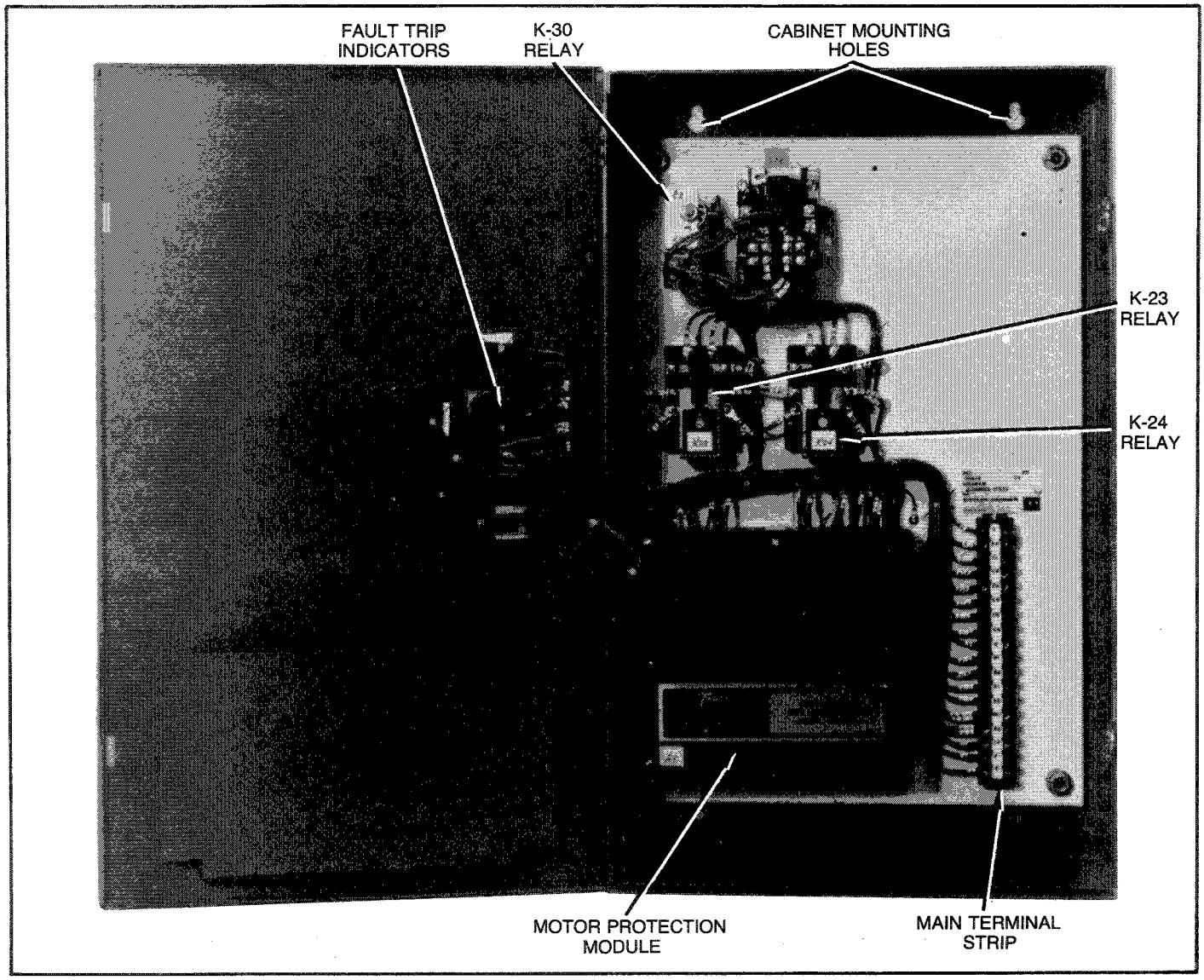

FIGURE 1 - Motor Starter Protection System Cabinet

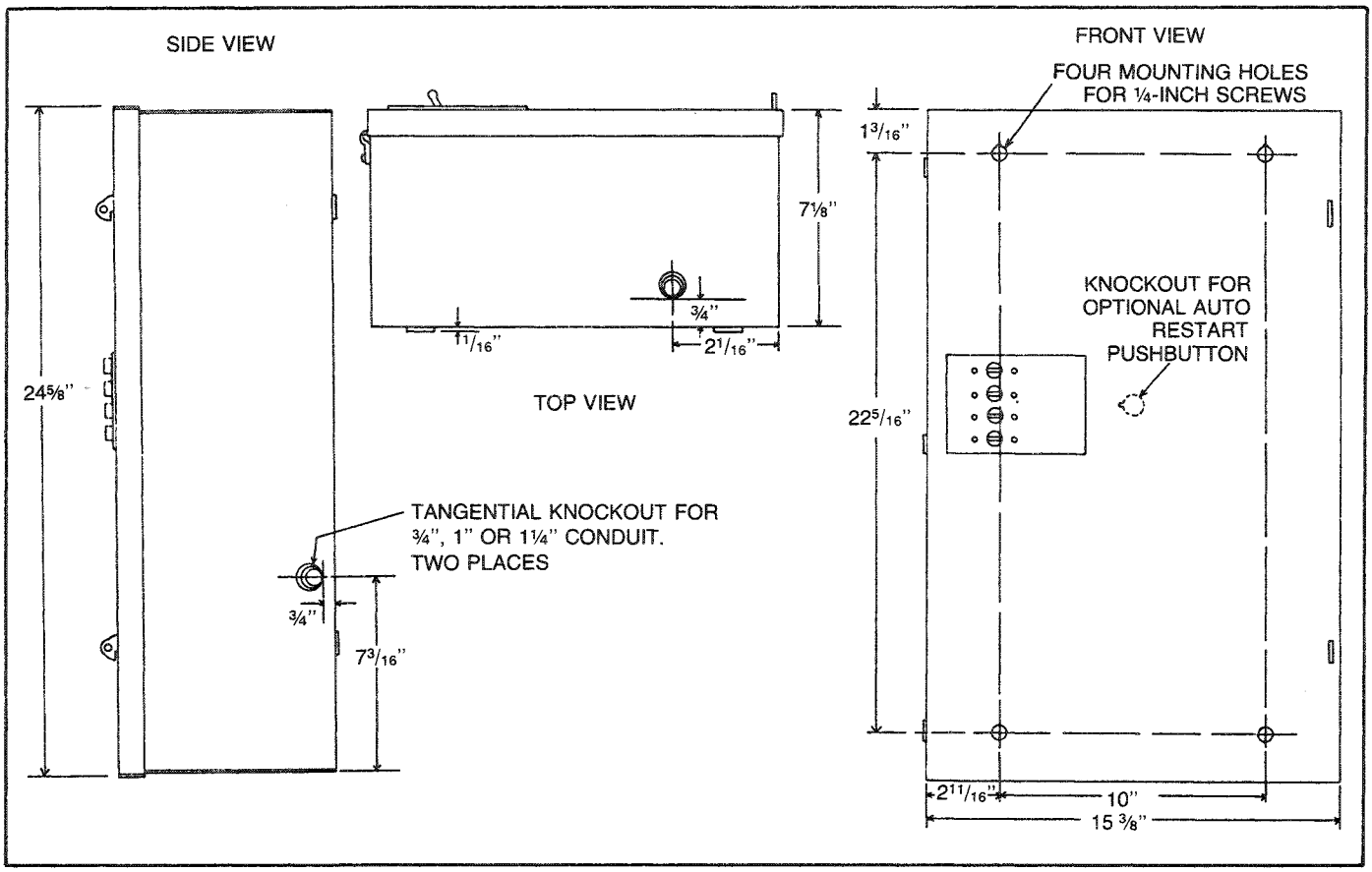

FIGURE 2 - Motor Starter Protection System Cabinet Dimensions

The damage occurs because an induction motor acts as a generator for several seconds after power is disconnected. The voltage generated by the motor can hold in control relays and starter contactors when a voltage loss occurs. The period of time the contactors are held in is approximately 60 electrical cycles or 1 second for a water cooled CenTraVac.

If line voltage is reestablished during the period of time the contactors are being held in by the motor generated voltage, and the two voltages are out of phase, motor torques may occur which are 6 to 10 times normal running torques. These torques occur as the motor is pulled into phase and may be in either the forward or reverse direction. These high torques cause severe overloading of the impeller hub area, with resultant upsetting of the impeller keyway and in severe cases cracking or destruction of the impellers.

The Motor Starter Protection System detects a distribution fault by monitoring two things; current draw and the M1 contactor. The tripping of the Distribution Fault Circuit Breaker is initiated based on the fact that, in normal operation, only during the occurances of an actual distribution fault is it found that the motor current draw is less than 20% of RLA and the M1 contactor is energized at the same time. An induction motor will normally always draw over 20% of RLA, even when completely unloaded; and whenever the M1 contactor is energized the motor is running. The only exceptions to the last statement occur during a distribution fault or during a starter dry run.

The distribution fault lockout is initiated when the motor current drops below 20% of RLA with the M1 contactor energized.

The Motor Starter Protection System senses this set of conditions to be a voltage loss for the reasons explained in the previous two paragraphs. Tripping of the Distribution Fault Circuit Breaker operation is completed within 6 electrical cycles (1/10 of a second) of the time when the voltage loss occurs.

B. Current Overload Protection

Operation of a CenTraVac motor over full load current causes the motor to overheat, thereby reducing its life. The MSPS senses the highest current on any of the three phases during equipment operation and will quickly disconnect the motor if unacceptable current draw exists. The solid state overload employed in the MSPS to protect motors from current overloads are much more accurate and reliable than electrical-mechanical devices previously employed.

C. Protection From Starting Current Overloads

Magnetic overload relays previously employed prevent tripping during starting in-rush by employing a time delay to bypass the overload device during equipment startup and acceleration. MSPS monitors current draw continuously, and will disconnect the motor if current requirements during startup and acceleration are excessive.

D. Motor Acceleration and Initiation of Transition

The MSPS initiates transition by sensing a decrease in starting in-rush current. Transition to the run mode takes place only after the motor is up to speed and the in-rush current has decreased to acceptable levels. Transition is based on what is actually occurring, and is not based strictly on time as with ex-

isting starters. However, if time to accelerate is excessive, or if the time to make transition is too long, the Motor Starter Protection System will disconnect the starter immediately. With an MSPS, the motor is not permitted to continue to attempt to reach operating speed for long time periods if it is unable to do so. Also, transition resistors will not be subjected to overload because transition has occurred while current is still at unacceptably high levels.

E. Under Voltage of Control Voltage Detection

Under voltage in the control circuit can cause various control relays to trip. This can give false indications as to why the CenTraVac chiller shut down. The MSPS detects undervoltage and trips the starter circuit breaker located in the fault trip indicator module.

F. Protection From Circuit Malfunction

Malfunctions, such as loose wires or fluttering controls which result in interrupted control signals in the starter control circuit, can cause the same effects as momentary power interruptions. An interrupted control signal will cause the MSPS to trip the starter circuit breaker which in turn de-energizes the starters.

Typically, only one pilot relay is used in starters to initiate the starter sequence. For added safety, the MSPS has dual pilot relays, which monitor each other. If one pilot relay has welded contacts or a burned out coil, the MSPS will trip the starter circuit breaker which in turn de-energizes the starter.

SHIPMENT

The shipping carton contains the Motor Starter Protection System Cabinet. There are three calibration resistors enclosed in a paper envelope inside the cabinet. Wiring diagrams may also be shipped in the carton or separately. All components are inspected before leaving the factory. Claims for damage should be filed with the carrier. Figure 1 illustrates the cabinet.

INSTALLATION

This section describes the procedure for installation of the Motor Starter Protection System (MSPS) kit in essentially all star-delta, closed transition starters, auto-transformer, and cross the line starters. A typical installation and connection drawing, which is also included in each kit, is shown on Page . This section also directs the installer as to components which must be removed from the starter and the MSPS components which are added.

NOTE: *Open transition starters must be converted to closed transition before attempting to install the Motor Starter Protection System.*

WARNING: OPEN MAIN STARTER DISCONNECT SWITCH BEFORE PERFORMING ANY OPERATIONS. FAILURE TO DO SO MAY RESULT IN SERIOUS PERSONAL INJURY OR DEATH CAUSED BY ELECTRIC SHOCK.

Components Removed from Existing Starter

Components required to perform certain electrical functions in the existing starter are to be removed and replaced by the improved components of the MSPS. The components involved are:

1. Current overloads. These are removed because the sensing and trip functions of the current overloads are provided by the MSPS.
2. The transition timer is removed. The initiation of transition is provided by the MSPS. If the existing transition timer had provided other functions for the control of the 1M, 2M, S or 1A contactors, then add relays to provide the additional functions.
3. The existing master control relay is removed because the function of energizing the main starter control circuit is provided by the MSPS. If the existing master control relay had provided other functions, then add relays to provide the additional functions.

Components Added

Components to be added are:

Three identical current transformers with an output rating of 2.0 to 5.0 amps at compressor motor rated load and 0.02 V.A. burden. The function of the current transformers is to sense the current in each phase on the load side of the starter.

Cabinet Location and Installation

The cabinet should be located near the chiller starter to minimize length of interconnecting wiring. The cabinet can be fastened to a wall using appropriate anchors, or it can be secured to a free-standing frame constructed of steel angle stock. Figure 2 provides dimensions of the cabinet and the location of mounting holes in the back of the cabinet. The cabinet weighs approximately 45 pounds and this must be considered when mounting the cabinet to a wall or constructing a free-standing frame.

WIRING

Refer to Figure 3 or the diagram shipped with the unit for wiring instructions, including recommended wire sizes. Figure 3 is typical only and provides general information for Star-Delta, closed transition applications. Be sure to use the diagram for the specific job application.

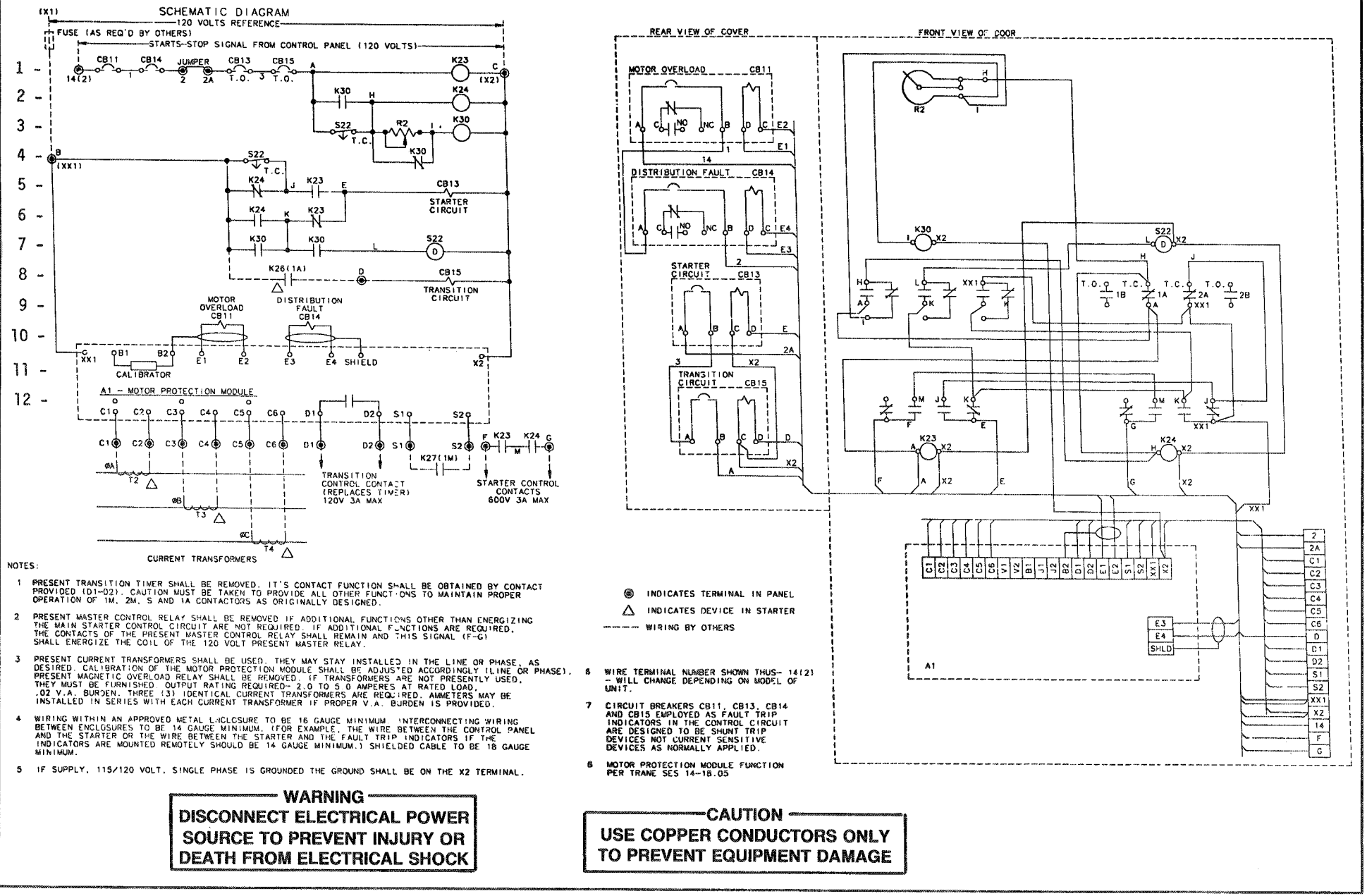

NOTES:

1 PRESENT TRANSITION TIMER SHALL BE REMOVED. IT'S CONTACT FUNCTION SHALL BE OBTAINED BY CONTACT PROVIDED (D1-D2). CAUTION MUST BE TAKEN TO PROVIDE ALL OTHER FUNCTIONS TO MAINTAIN PROPER OPERATION OF 1M, 2M, S AND 1A CONTACTORS AS ORIGINALLY DESIGNED.

2 PRESENT MASTER CONTROL RELAY SHALL BE REMOVED IF ADDITIONAL FUNCTIONS OTHER THAN ENERGIZING THE MAIN STARTER CONTROL CIRCUIT ARE NOT REQUIRED. IF ADDITIONAL FUNCTIONS ARE REQUIRED, THE CONTACTS OF THE PRESENT MASTER CONTROL RELAY SHALL REMAIN AND THIS SIGNAL (F-G) SHALL ENERGIZE THE COIL OF THE 120 VOLT PRESENT MASTER RELAY.

3 PRESENT CURRENT TRANSFORMERS SHALL BE USED. THEY MAY STAY INSTALLED IN THE LINE OR PHASE, AS DESIRED. CALIBRATION OF THE MOTOR PROTECTION MODULE SHALL BE ADJUSTED ACCORDINGLY (LINE OR PHASE). PRESENT MAGNETIC OVERLOAD RELAY SHALL BE REMOVED. IF TRANSFORMERS ARE NOT PRESENTLY USED, THEY MUST BE FURNISHED. OUTPUT RATING REQUIRED- 2.0 TO 5.0 AMPERES AT RATED LOAD, .02 V.A. BURDEN. THREE (3) IDENTICAL CURRENT TRANSFORMERS ARE REQUIRED. AMMETERS MAY BE INSTALLED IN SERIES WITH EACH CURRENT TRANSFORMER IF PROPER V.A. BURDEN IS PROVIDED.

4 WIRING WITHIN AN APPROVED METAL ENCLOSURE TO BE 16 GAUGE MINIMUM. INTERCONNECTING WIRING BETWEEN ENCLOSURES TO BE 14 GAUGE MINIMUM. (FOR EXAMPLE, THE WIRE BETWEEN THE CONTROL PANEL AND THE STARTER OR THE WIRE BETWEEN THE STARTER AND THE FAULT TRIP INDICATORS IF THE INDICATORS ARE MOUNTED REMOTELY SHOULD BE 14 GAUGE MINIMUM.) SHIELDED CABLE TO BE 18 GAUGE MINIMUM.

5 IF SUPPLY, 115/120 VOLT, SINGLE PHASE IS GROUNDED THE GROUND SHALL BE ON THE X2 TERMINAL.

⊛ INDICATES TERMINAL IN PANEL

△ INDICATES DEVICE IN STARTER

WIRING BY OTHERS

6 WIRE TERMINAL NUMBER SHOWN THUS- 14(2) - WILL CHANGE DEPENDING ON MODEL OF UNIT.

7 CIRCUIT BREAKERS CB11, CB13, CB14 AND CB15 EMPLOYED AS FAULT TRIP INDICATORS IN THE CONTROL CIRCUIT ARE DESIGNED TO BE SHUNT TRIP DEVICES NOT CURRENT SENSITIVE DEVICES AS NORMALLY APPLIED.

8 MOTOR PROTECTION MODULE FUNCTION PER TRANE SES 14-18.05

WARNING

DISCONNECT ELECTRICAL POWER SOURCE TO PREVENT INJURY OR DEATH FROM ELECTRICAL SHOCK

CAUTION

USE COPPER CONDUCTORS ONLY TO PREVENT EQUIPMENT DAMAGE

FIGURE 3 - Typical Wiring, Motor Starter Protection System, Star-Delta, Closed Transition Application

CALIBRATION

This section covers procedures for calibrating and preparing the MSPS for operation. The adjustments to be made are:

Line Frequency Adjustment
Overload Calibration
Locked Rotor Current Lockout
Low Voltage Lockout
Maximum Acceleration Time
High Voltage Compensation

Adjustment Procedures

WARNING: BEFORE WORKING ON THE MSPS OR ANY ELECTRICAL EQUIPMENT DISCONNECT ALL ELECTRIC POWER TO THE EQUIPMENT. FAILURE TO DO SO MAY RESULT IN SERIOUS PERSONAL INJURY OR DEATH BY ELECTRIC SHOCK.

NOTE: *On units equipped with the Distribution Fault function a small circuit board mounted inside the Motor Protection Module must be tilted out to perform calibration. This is done by gently pulling on the two black tabs located on the top of the circuit board and tilting it down on its hinges.*

I. Line Frequency Adjustment
The MSPS can operate on either 50 or 60 Hertz electrical systems. The line frequency is set as follows:
A. The line frequency of the jobsite must first be determined (60 Hertz for all U.S. installations).
B. The frequency switch (see Figures 4 and 5) should then be set to the position which corresponds to the installation frequency.
C. Write in the setting made on the Motor Protection Module Nameplate.

II. Compressor Motor Overload Setting
The overload is set by adjusting the resistance of the current calibrator within the Motor Protection Module (MPM). The MPM is designed so that with the current calibrator correctly set the overload will trip at 107% of the motor rated load current. The use of a 107% trip point prevents nuisance full load trips and yet protects the compressor motor from potentially damaging overloads.

The correct procedure for setting the overload is as follows:
A. Determine the Rated Load Amperage (RLA) and the current transformer ratio for the unit. Where the actual jobsite voltage is equal to, or lower than, the specified voltage

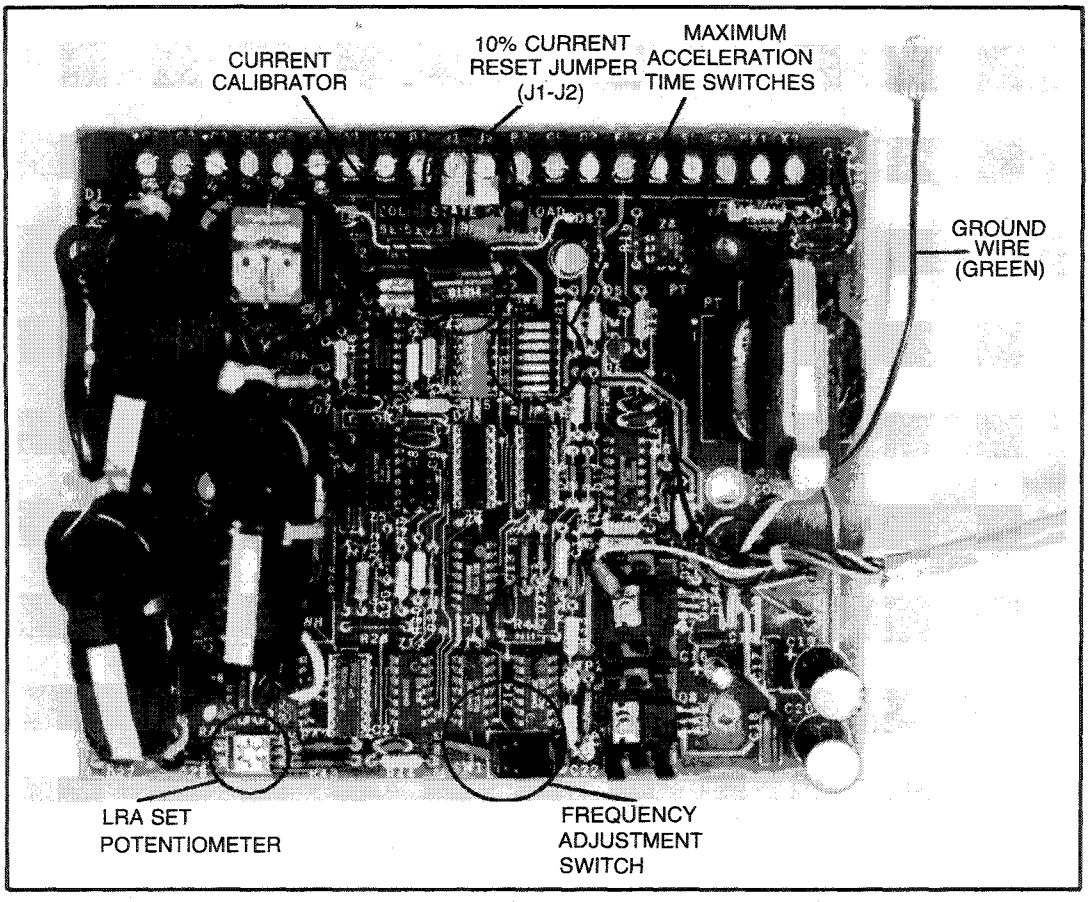

FIGURE 4 - Motor Protection Module

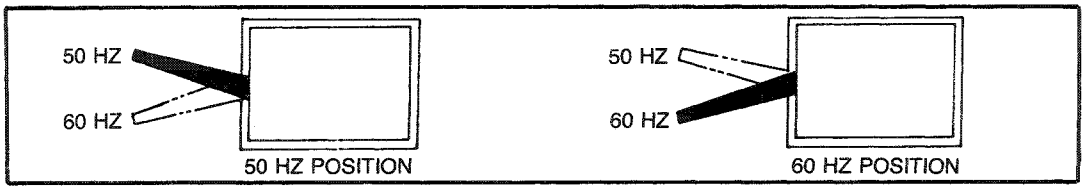

FIGURE 5 - Frequency Switch

TABLE 1 - Current Calibrator Selection Table

I_{SEC} Ampere Rating		Number on Current Calibrator	Potentiometer Adjustment Resistance (Ohms)	I_{SEC} Ampere Rating		Number on Current Calibrator	Potentiometer Adjustment Resistance (Ohms)
Min.	Max.			Min.	Max.		
2.01	2.05	H816	185	3.51	3.55	H817	106
2.06	2.10	H816	180	3.56	3.60	H817	105
2.11	2.15	H816	176	3.61	3.65	H817	103
2.16	2.20	H816	172	3.66	3.70	H818	102
2.21	2.25	H816	168	3.71	3.75	H818	101
2.26	2.30	H816	165	3.76	3.80	H818	99.2
2.31	2.35	H816	161	3.81	3.85	H818	97.9
2.36	2.40	H816	158	3.86	3.90	H818	96.6
2.41	2.45	H816	155	3.91	3.95	H818	95.4
2.46	2.50	H816	151	3.96	4.00	H818	94.2
2.51	2.55	H817	148	4.01	4.05	H818	93.0
2.56	2.60	H817	146	4.06	4.10	H818	91.8
2.61	2.65	H817	143	4.11	4.15	H818	90.7
2.66	2.70	H817	140	4.16	4.20	H818	89.6
2.71	2.75	H817	138	4.21	4.25	H818	88.5
2.76	2.80	H817	135	4.26	4.30	H818	87.5
2.81	2.85	H817	133	4.31	4.35	H818	86.5
2.86	2.90	H817	130	4.36	4.40	H818	85.5
2.91	2.95	H817	128	4.41	4.45	H818	84.5
2.96	3.00	H817	126	4.46	4.50	H818	83.5
3.01	3.05	H817	124	4.51	4.55	H818	82.6
3.06	3.10	H817	122	4.56	4.60	H818	81.7
3.11	3.15	H817	120	4.61	4.65	H818	80.8
3.16	3.20	H817	118	4.66	4.70	H818	79.9
3.21	3.25	H817	116	4.71	4.75	H818	79.1
3.26	3.30	H817	114	4.76	4.80	H818	78.2
3.31	3.35	H817	113	4.81	4.85	H818	77.4
3.36	3.40	H817	111	4.86	4.90	H818	76.6
3.41	3.45	H817	109	4.91	4.95	H818	75.8
3.46	3.50	H817	108	4.96	5.00	H818	75.1

rating shown on the unit nameplate, the overload setting can be established based on the nameplate RLA. When the actual voltage is higher than the specified voltage, refer to "High Voltage Compensation" found on Page 9.

NOTE: *If the unit is equipped with power factor correction capacitors which are connected on the load side of the overload current transformers, the RLA shown on the unit nameplate will have to be recalculated for the purpose of setting the overload. To determine the adjusted RLA, the machine should be run to full load and amperage readings taken on the load and line sides of the capacitor terminal points. The nameplate RLA should be multiplied by the ratio of the current on the line side of the capacitors to current on the load side of the capacitors. This gives the adjusted RLA used to set the current calibrator. (See the example below).*

$$\text{Adjusted RLA} = \text{Nameplate RLA} \times \frac{\text{Line Side Current}}{\text{Load Side Current}}$$

Example:
Motor Rating (RLA) = 100 amps
Current on line side of capacitors = 84 amps
Current on load side of capacitors = 92 amps

$$\text{Adjusted RLA} = 100 \text{ amps} \times \frac{84 \text{ amps}}{92 \text{ amps}} = 91 \text{ amps}$$

NOTE: *If the power factor capacitors are connected on the line side of the current transformers for the MPM, or if the capacitor leads are run through the current transformers with the motor leads, the RLA does not need to be adjusted. The motor nameplate RLA should be used to set the current calibrator in this case.*

B. Once the correct RLA has been determined, the rated load secondary current (I/sec) at full load is dependent upon the location of the current transformers. The correct methods to determine I/sec are discussed below:

1. Current Transformer Monitoring Line Current
   If the current transformers are located so that they monitor line current, the value of the I/sec is determined by dividing the current transformer ratio into the RLA (See the equation example below.)

   I/sec = RLA ÷ (CT ratio)

   Example:
   RLA = 91 amps
   CT ratio = $\frac{100}{5}$

   I/sec = $91 \div \frac{(100)}{5}$

   I/sec = 4.55

2. Current Transformers Monitoring Phase Current
   If the current transformers are located in a star delta starter in such a way that they monitor phase current, the value of I/sec is determined by dividing the current transformer ratio into the RLA and multiply this quantity by 0.58. (See the equation example below)

   I/sec = (RLA ÷ CT Ratio) x 0.58

   Example:
   RLA = 91 amps
   CT Ratio = $\frac{100}{5}$

   I/sec = $(91) \div \frac{(100)}{5} \times 0.58 = 2.64$

C. With the l/sec value obtained, use Table 1 to determine the correct calibrator and its setting. For the preceeding example in which the line current is being monitored (l/sec = 4.55) the correct current calibrator would be H818. The correct calibrator setting would be 82.6 ohms. With the calibrator setting adjusted in this manner, the overload trip point would be 107% of the nameplate RLA.

D. To set the current calibrator it must be removed from the module. Using a digital ohmmeter (3-1/2 place accuracy minimum) set the resistance of the calibrator to the value taken from Table 1.

E. Replace current calibrator in module. Write the calibrator number and setting on the MPM nameplate.

III. Locked Rotor Current Lockout Adjustment

The MPM protects the compressor motor from excessive locked rotor current draw during startup. The correct procedure for setting the LRA trip point is as follows:

A. The LRA trip point is dependent upon the setting of the current calibrator which must first be set correctly.

B. The LRA trip point is set using the LRA potentiometer. (See Figures 4, 6 and 7.)

C. To determine the correct setting of the LRA potentiometer, the percent ratio of the compressor motor locked rotor amperage to full load amperage must be determined. This is computed using the following equation:

$$\frac{\text{Nameplate LRA}}{\text{Nameplate RLA}} \times \%\ \text{In-rush Current} = \%\ \text{Ratio}$$

EXAMPLE:
Star Delta Starter (Normal In-Rush Current = 33%)
Nameplate RLA = 100 amps
Nameplate LRA = 600 amps

$$\frac{600\ \text{amps}}{100\ \text{amps}} \times 33\% = 198\ \text{amps}$$

NOTE: The above example is for a Star-Delta type starter. It should be noted that normal "in-rush" current is dependent upon the type of starter being used. Table 2 lists the different starter type characteristics.

D. To set the LRA potentiometer insert a screwdriver in the adjusting slot and turn the potentiometer to the full counter-clockwise (CCW) stop. This establishes a percent ratio setting of 70. From this point the potentiometer should be rotated clockwise so the end of the potentiometer slot that was pointing towards the 70% position is aligned with the desired setting, as shown in Figure 6.

NOTE: *The range of adjustment of the LRA potentiometer is 70 to 1070 percent of RLA.*

E. Write the percent ratio setting (example 198%) on the nameplate of the MPM.

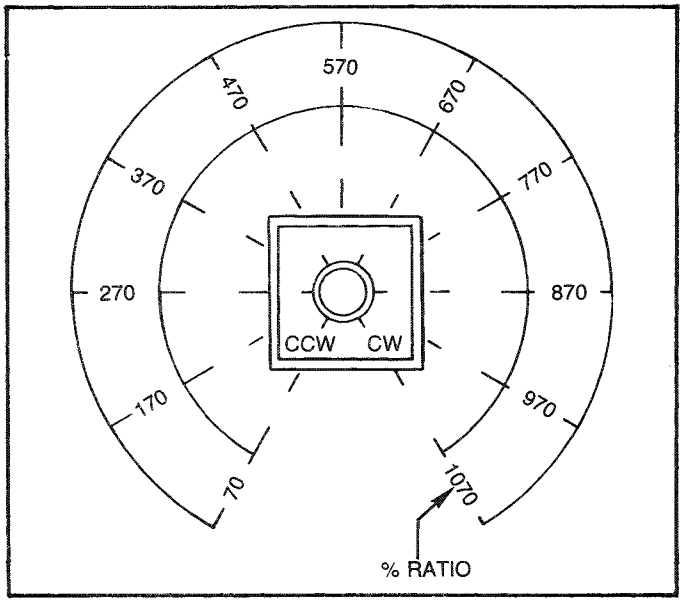

FIGURE 6 - LRA Potentiometer

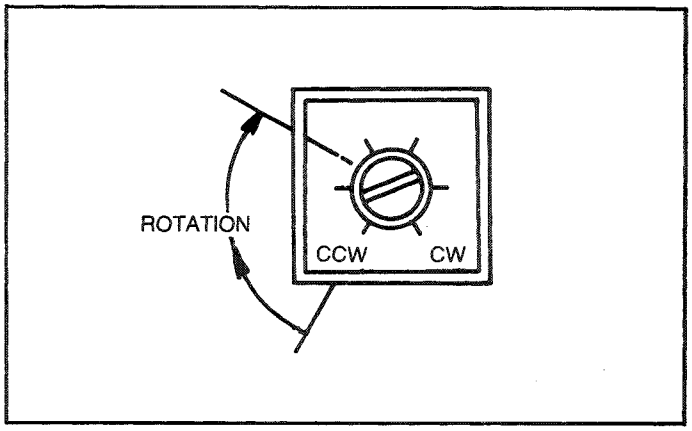

FIGURE 7 - Sample LRA Setting

IV. Maximum Acceleration Time Adjustment

The MPM limits the maximum acceleration time the motor can undergo by tripping the "Motor Overload" circuit breaker, locking the machine off, whenever the MPM does not transition in the time period set on the LRA time adjustment. (See Figure 8). This prevents the motor from drawing LRA for an excessive priod of time and overheating. The maximum acceleration time is set as follows:

A. Determine the desired maximum acceleration time (between 1 and 63 seconds) for the unit. Current production CenTraVacs utilizing Star-Delta type starters have the maximum acceleration time set at 12 seconds. This setting may vary depending on the type of unit, type of starter, and jobsite conditions. The setting should be based on the typical acceleration time for the particular unit and jobsite conditions.

B. Once the desired value is known, the combination of switches on the LRA time adjustment which adds to this value should be switched to the on position (see Figure 8).

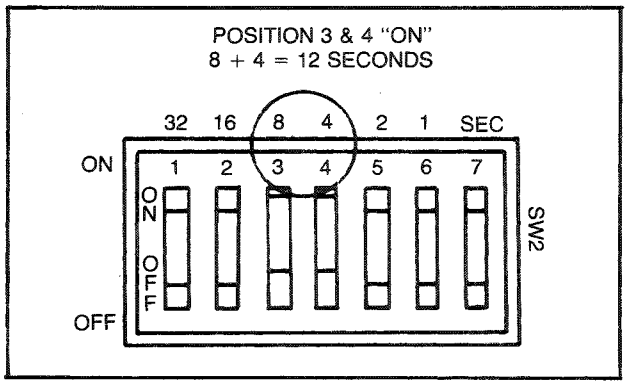

FIGURE 8 - Maximum Acceleration Time Switch

TABLE 2 - Starter Electrical Characteristics

Type of Starter	Starting Characteristics - % of Rated Value			
	% Tap	Motor Voltage	Motor Current	Motor Torque
Full Voltage Type				
Magnetic - X-Line	n/a	100	100	100
Reduced Voltage Types				
Auto-Transformer	80	80	80	64
	65	65	65	42
	50	50	50	25
Primary Reactor	80	80	80	64
	65	65	65	42
	50	50	50	25
Reduced - Inrush Types				
Star-Delta	n/a	100	33	33
Open or Closed Transition	n/a	100	33	33

NOTE: *If none of the switches are in the on position the unit will not start. The MPM allows no acceleration time in this situation and the "Motor Overload" circuit breaker will trip immediately upon attempted startup.*

C. Write the LRA time adjustment setting on the MPM nameplate.

V. High Voltage Compensation:
The RLA shown on the unit nameplate is based on original design conditions and the nominal voltage ordered. The actual jobsite voltage quite often varies from the nominal. Higher than nominal line voltage permits the motor to produce higher than rated horsepower without motor current draw in excess of nameplate. To prevent overloading of the motor due to higher than rated voltage, the MPM should be recalibrated. This can be done in one of two ways:

A. By removal of the 10% current reset jumper from Terminals J1-J2 in the MPM (see Figure 4), the module is automatically recalibrated so that approximately 90% of the motor nameplate current rating is the new "rated" current for the application. The MPM should be setup normally, the removal of the jumper recalibrates all functions of the MPM.

B. The MPM can also be recalibrated to compensate for high voltage by resetting the current calibrator. The proper value is determined by multiplying the I/sec value by the ratio of the rated voltage to the actual line voltage. (See the equation.)

$$\text{New I/sec} = \text{I/sec} \times \frac{\text{rated voltage}}{\text{actual line voltage}}$$

Example:
Original I/sec = 4.55
Rated Voltage - 460 volts
Actual line voltage = 485 volts

$$\text{New I/sec} = 4.55 \times \frac{460 \text{ volts}}{485 \text{ volts}} = 4.32$$

The new I/sec value is then used to enter Table 1 and determine a new current calibrator setting. The calibrator should be reset to this value. This will recalibrate all other MPM functions, compensating for the high voltage condition.

TABLE 3 - Typical Louis Allis RVX Motor Characteristics

Frame Size 1760 - 455 HP - 60 Hertz			
Voltage	Amperage		
		Locked Rotor	
	Full Load	Star	Delta
440	529	845	2660
460	510	880	2780
480	498	920	2900

NOTE: *When the MPM overload current setting is recalibrated in either of the above ways the locked Rotor Current Lockout Adjustment should also be reset. This is because unlike Rated Load Amps which is reduced with higher voltage, Locked Rotor Current increases with an increase in voltage. This is illustrated in Table 3 which is based on a Louis Allis type RVX motor. It may be seen that for a 455 horsepower motor, as the voltage increases by 9.1% (from 440 to 480 volts) the RLA decreases by 6.2% (from 529 to 498 amps) and the LRA (star) increases by 8.9% (from 845 to 920 amps). The LRA current trip point should be set higher by the same percentage that the overload current is set down. When the 10% current reset jumper is removed, the percent ratio of locked rotor is rated load amperage should be increased 10% over its original setting. When the current calibrator is recalibrated downward by the ratio of rated voltage to actual voltage, the ratio of the locked rotor to rated load amperage should be set upward by the ratio of actual voltage to rated voltage.*

Any recalibration of the module, such as removal of the J1-J2 jumper, or recalibration of the current calibrator should be noted on the MPM module cover along with the reason for recalibration.

VI. Low Voltage Lockout Calibration
The Motor Starter Protection System incorporates an adjustment which allows selection of the minimum operating control voltage. If the unit experiences a control voltage below the setting of the low voltage lockout, the Starter Protection System locks the machine off through the "Starter Fault" circuit breaker. The low voltage lockout adjustment is made on

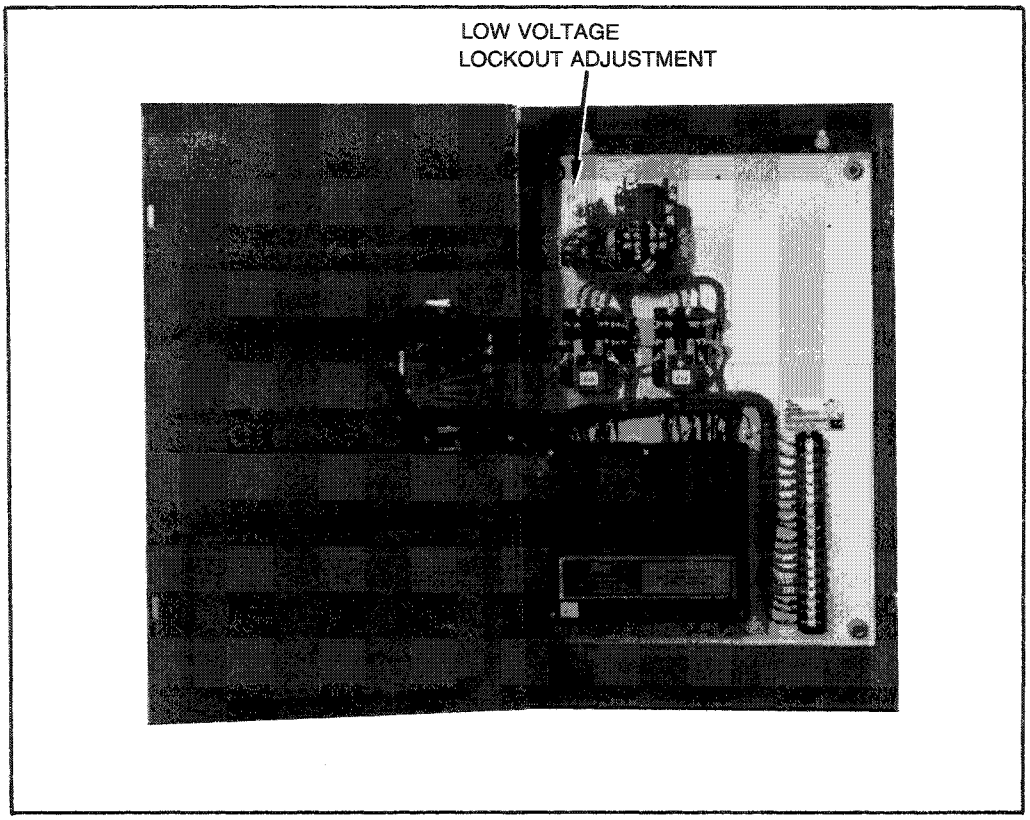

FIGURE 9 - Low Voltage Lockout Adjustment Location

the slotted potentiometer located on the upper left side of the cabinet. See Figure 9. Use the following procedure:

A. Turning the low voltage potentiometer full counter-clockwise provides a trip point of 80 volts ± 10%.
B. Turning the low voltage potentiometer full clockwise provides a trip point of 108 volt ± 10%.
C. The desired nominal trip point voltage can be adjusted to any voltage between these extremes by adjusting the low voltage potentiometer accordingly. The percentage change of the low voltage setting varies linearly with the percentage rotation of the potentiometer. This is expressed by:

(DESIRED VOLTAGE-80) ÷ 28 x 100% = PERCENT ROTATION

For Example:
Desired Lockout voltage is 94 volts.
(94-80) ÷ 28 x 100% = 21%
Turn the potentiometer 21% of the way from full counter-clockwise to full clockwise.

DRY RUN OF STARTERS EQUIPPED WITH MOTOR STARTER PROTECTION SYSTEM

CAUTION: Power will be "ON" for this test. Use extreme caution so as not to contact the starter. Contact may result in serious personal injury or death caused by electric shock.

Starters equipped with the Motor-Starter Protection system may be "dry-run" just as starters not similarly equipped. There are two differences which must be noted:

1. Before the dry run, the distribution fault circuit breaker must be disconnected. This may be accomplished by simply removing a wire from the distribution fault circuit breaker. If this is not done the starter will not sequence but will lockout on distribution fault instantaneously upon initiation of the start sequence.

   It should be noted that this provides a simple check for proper operation of the distribution fault function of the motor protection module. The distribution fault circuit breaker should trip instantly if it is left connected during a starter dry run.
2. The second difference which should be noted is that immediately upon energization of the dry run, the starter will go through transition. This happens because the MPM initiates transition on the basis of motor current draw. During a normal startup the CenTraVac, compressor inlet vanes are closed which allows the motor current to drop from LRA to a value below RLA. When the motor current drops from LRA to 85% of RLA during start, the MPM initiates transition. During a dry run there is no current draw so the MPM immediately initiates transition.

MOTOR STARTER PROTECTION SYSTEM TYPICAL SEQUENCE OF OPERATION

See Figure 3 for typical wiring.

Upon a call for a start from the unit control panel power to terminal 14 (line 1) in the fault trip indicator module (A13) power flows through the fault trip indicator contacts (line 1). Power flows on to energize pilot relay K23 (line 1). It also flows through the S22 timer NC contact (line 3) to energize pilot relay K24 (line 2). Power also feeds through the K30 relay NC contact (line 4) to energize the K30 relay.

The K30 NC contacts (line 4) open leaving the K30 relay (line 3) to be held energized through the low control voltage potentiometer R2 (line 3). The K30 NO contacts (line 2) close holding pilot relay K24 (line 2) energized and power to the low control voltage potentiometer R2 (line 3). Two sets of K30 NO contacts (line 7) close energizing the S22 timer (line 7).

Both pilot relays K23 and K24 are now energized. The K23 NO contacts (line 5) which are wired in series with the K24 NO contacts (line 7) both close allowing power to flow between terminal F (line 5) and terminal G (line 7) causing the starter contactors to begin the unit start sequence.

A set of NO auxiliary contacts (line 12) on the main starter contactor close causing the Motor Protection Module A1 to begin to monitor locked rotor current draw and begin timing the motor acceleration time.

The K23 and K24, NO and NC, self monitoring contacts (lines 5 and 6) switch preventing the "Starter Circuit" fault indicator CB13 (line 5) from tripping.

The S22 timer NC contact (line 3) opens requiring that power be held to pilot relay K24 (line 2) and the potentiometer R2 (line 3) through the relay K30 contact (line 2).

An S22 timer NC contact (line 4) opens to remove power from terminal J (line 5), this prevents the "Starter Circuit" fault indicator (line 5) from tripping.

If the starter is a reduced voltage or current type (e.g. Star-Delta or Auto transformer) which requires transition to occur, this is initiated by the Motor Protection Module A1 when motor current drops below 80 percent of unitrated load current draw, indicating the motor is up to full running speed. It initiates transition by closing a set of contacts giving a transition signal (line 12).

If the unit does not complete transition once intiated, that is, one of the transition contactors (the transition resistor contactor on a Star-Delta type starter indicated by a set of K26 1A NO contact, line 8) remains closed too long, the "Transition Circuit" fault indicator will trip shutting down the machine.

Upon completion of transition the Motor Protection Module A1 monitors the rated load current of the unit to prevent overloads.

CENTRAVAC MOTOR STARTER PROTECTION SYSTEM SEQUENCE OF OPERATION FOR EACH FAULT CONDITION

See Figure 3 for typical wiring.

Following are the descriptions of the conditions which will cause each fault trip indicator to trip when the Motor Protection System is operating correctly.

Motor Overload CB-11 — There are three faults which will cause the Motor Protection Module (MPM) to trip the "Motor Overload" fault indicator. They include:

1. Current draw in excess of rated load amperes. If at any time after the point when the MPM calls for transition to occur, the unit current draw exceeds 107% of the rated load amperes the MPM is calibrated for, the MPM will send a signal to trip the "Motor Overload" fault indicator.
2. Current draw in excess of normal locked rotor amperes. If at any time during the time between the point when the motor is first energized and the point when the (MPM) calls for transition to occur the unit current draw exceeds the value set on the LRA potentiometer in the MPM, the MPM will send a signal to trip the "Motor Overload" fault indicator.
3. Excessive acceleration time. If the unit current draw does not drop to below 80% of rated load amperes following energization of the starter, indicating that the motor never reached full speed in the time set on the maximum acceleration time switches in the MPM, the MPM will send a signal to trip the "Motor Overload" fault indicator.

Distribution Fault CB-14 — The MPM will trip the "Distribution Fault" fault indicator whenever there is a loss of line voltage to the unit when it is running. It is impossible to sense the actual loss of line voltage because as soon as the voltage loss occurs, the compressor motor begins to act as a generator and will produce enough power to support all control functions for approximately 60 cycles.

For this reason, voltage loss is sensed is by monitoring current draw. The fact that makes this possible is that even when completely unloaded an induction motor draws at least 15% - 20% of its rated load amperes. On this basis, the Motor Protection Module monitors the main starter contactor to determine if the unit is running and the current draw of the unit to determine if it is drawing less than 15% of its rated load amperes. The main contact must be monitored so the MPM knows when the current is below 15% because of a normal shutdown. If the contactor is closed and the current is below 15% of rated load amperes the MPM will send a signal to trip the "Distribution Fault" fault indicator.

Starter Circuit — CB-13. There are six faults which will cause the "Starter Circuit" fault indicator to trip. They include:

1. Intermittent control voltage or a fluttering flow switch (see Figure 3). The sequence of operation to protect against this is as follows: The unit is operating in a normal manner and

control power flickers at terminal 14 (line 1). Upon loss of power pilot relays K23 (line 1) and K24 (line 2), relay K30 (line 3) and timer S22 (line 7) will drop out. If control power returns to terminal 14 (line 1) in less than 10 seconds pilot relay K23 (line 1) will pull in. Relay K30 and pilot relay K24 will not be able to pull in because the S22 timer contact (line 3) is timed too close, it takes 10 seconds to close following a control power loss. The pilot relay K23 NO contact (line 5) will close and because the pilot relay K24 NC contact (line 5) does not open power will be applied to trip the "Starter Circuit" fault indicator CB13 (line 5) locking the machine off until manually reset. The S22 timer uses a 10 second timing period because if control power has been off for this period of time, the standard control panel will have locked the unit off and will not allow a restart until it has gone through a post lube & prelube period which eliminates any danger of compressor or starter damage because of rapid recycling.

2. Low Control Voltage — the sequence of operation to protect against this is as follows: The unit is operating in a normal manner and the control voltage drops to the trip level set with the Low Control Voltage Protection potentiometer R2. At this point, the low control voltage protection relay K30 drops out. The K30 relay NO contact (line 2) opens de-energizing pilot relay K24 (line 2). Both pilot relay K24 NO contacts (line 7) open dropping out the starter and sending power to "Starter Circuit" CB13 (line 7) fault indicator causing it to trip.

3. Pilot Relay Failure — The sequence of operation to protect against pilot relay failure, either failure to pull in or drop out, is as follows: The unit calls for a start and the pilot relay K23 (line 1) pulls in correctly, but the pilot relay K24 (line 2) does not pull in; this could be for any reason, burned out coil, loose wire, etc. The pilot relay K23 NO contact (line 5) closes but the pilot relay L24 NC contact (line 5) will not open. This will send power to the "Starter Circuit" CB13 (line 7) fault indicator causing it to trip. The other pilot failure mode would be if one of the relays would not drop out i.e., it was welded in. This is protected against as follows: The fact that a pilot relay is welded in will be caught on the next unit shutdown. Assume for this example that the pilot relay K24 will not drop out. When the unit shuts down the pilot relay K23 NC contact (line 6) will close. The pilot relay K24 NO contact will remain in the closed position. This will send power to the "Starter Circuit" CB13 (line 7) fault indicator causing it to trip.

4. Intermittant Control Voltage Protection Timer (S22) Failure. The timer could fail in two modes, either contacts open or contacts closed. If the Timer S22 fails with contacts open, upon a call for a start the pilot relay K23 (line 1) will be energized. The pilot relay K24 (line 2) will not be energized because the Timer S22 NC contact (line 3) is open and holding pilot relay K24 out. The pilot relay K23 NO contact (line 5) closes and pilot relay K24 NC contact (line 5) will remain closed. This will send power to the "Starter Circuit" CB13 fault indicator (line 5) causing it to trip.

   If the timer S22 fails with contacts closed upon a call for a start the pilot relays K23-K24 will pull in normally. The Timer S22 NC contact (line 4) will not open, this will send power through the pilot relay K23 contacts (line 5) causing it to trip.

5. Low Control Voltage Protection Control Relay (K30) Failure. The relay K30 could fail in two modes, either contacts open or contacts closed. If the relay K30 fails with the contacts open upon a call for a start, the pilot relay K23 (line 1) will be energized. The relay K30 contacts (line 7) will not close and so the timer S22 (line 7) will not be energized. The Timer S22 NC contact (line 4) will not open, this will send power through the pilot relay K23 contacts (line 5) and to the "Starter Circuit" CB13 fault indicator (line 5) causing it to trip.

   If the relay K30 fails with the contacts closed, when the unit shuts down, the relay K30 NO contacts (line 7) will not open. This will allow power to flow through the pilot relay K23 NC contacts (line 6) to the "Starter Circuit" CB13 fault indicator (line 5) causing it to trip.

6. Low Control Voltage Protection Potentiometer (R2) Failure. If the low voltage potentiometer (R2) (line 3) fails, it will fail open. If the unit is running in a normal manner when the low voltage potentiometer (R2) fails this will cause the relay K30 (line 3) to drop out. The relay K30 NO contacts (line 2) open dropping the pilot relay K24 (line 2). The pilot relay K24 NC contacts (line 5) close sending power through the pilot relay K23 NO contact (line 5) which will remain closed, to the "Starter Circuit" CB13 fault indicator (line 5) causing it to trip.

Transition Circuit CB 15 — The "Transition Circuit" CB15 fault indicator (line 8) will be tripped whenever the transition contactor auxiliary K26 (line 8) remains closed for a period of time longer than that allowed by the "Transition Circuit" CB15 fault indicator (1.5 seconds). This indicates that the unit did not complete transition properly.

TROUBLE ANALYSIS

The charts on the following pages provide trouble analysis sequences for the Motor Starter Protection System. Problem symptoms are listed across the top of the chart and possible causes are listed in the left hand column. Recommended solutions are in the right hand column. The numbers in the columns under the problem symptoms indicate possible causes and solutions for those symptoms. The numbering indicates most likely through least likely causes of the problem; 1 being most likely, 2 being second most likely, etc.

CHART 1 - Nuisance Trip Trouble Analysis

Symptom/ Possible Cause	Motor Overload Trips	Distribution Fault Trips	Starter Fault Trips	Transition Fault Trips	Recommended Action
Incorrect Current Calibrator Adjustment or Installation	3				Determine Proper setting recalibrate and install
Incorrect LRA Trip Point Setting	4				Determine Proper setting and recalibrate LRA trip setting.
High Voltage Recalibration Jumper Removed	7				Determine if jumper should be removed to compensate for high voltage.
Excessive Running Motor Current Draw	1				Check for faulty compressor motor
Excessive LRA Motor Current Draw	2				Check for faulty compressor motor
Frequency Selector Switch Incorrectly Set	5				Check selector setting
Motor Acceleration Time to Long	8				Contact The Trane Co. Tech. Ser., La Crosse, WI
Low Voltage to Unit			3**		Contact Power Company
Motor Current Drops Below 20% RLA		5			Contact The Trane Co., Tech. Ser., La Crosse, WI
Distribution Fault (complete voltage loss) Occurs For Over 1½ Cycles	11 (Only on units not equipped DF)	1			Contact Power Company
Current Transformers Incorrectly Wired (dot polority incorrect)	9	2			Rewire Current Transformer
Faulty Circuit Breaker - CB11	10				Replace circuit breaker
1M (K27) Auxiliary Contactor Hanging In		4			Replace contactor
Flow Switch or Similar Safety Device Fluttering			1**		Check water flows, check for air in systems, check for correct installation
Loose Control Circuit Wiring			2**		Check continuity of circuits to locate - tighten wiring
Low Voltage Trip Misadjusted			4**		Readjust trip to desired value.
Chattering 2M (K28) Auxiliary or Main Contactor		3			Replace contactor
S-22 Timer Defective			7**		Replace contactor
Defective Circuit Breaker CB-13			8		Replace circuit breaker
Locked Rotor Trip Time Set Incorrectly	6				Contact The Trane Co., Tech. Ser., La Crosse, WI
Defective Circuit Breaker CB-15				2**	Replace circuit breaker.
Transition Resistor Hanging In (K-26)			9*	1**	Replace contactor.
Welded Pilot Relay Contacts (K23-K24)			5		Replace contactor.
Defective Pilot Relay Coils (K23-K24)			6		Replace contactor coils.
Defective MPM Module	12	6			Replace module.

* Air cooled and unit mounted starters only

** MSPS retrofit kit only

CHART 2 - Trouble Analysis, System and Solid State Fails to Function

Symptom/ Possible Cause	Motor Overload Will Not Trip	Distribution Fault Will Not Trip	Starter Fault Will Not Trip	Transition Fault Will Not Trip	Starter Will Not Transition	Incorrect V1-V2 Control Voltage	Recommended Action
Verify 120 volts Across XX1 and X2	1	1	1	1	1	1	Check Power Supply Wiring
Verify Correct Wiring & Closure on S1-S2 (K-27)	2	2					Check continuity of circuits to locate correct wiring or replace contactor as required.
Incorrect Current Calibrator Adjustment	3	3			2	2	Determine proper setting and recalibrate LRA trip setting.
Current Transformer Incorrectly Wired or Defective	4				3	3	Check continuity of circuits to locate correct wiring.
Faulty Circuit Breaker CB11	5						Replace circuit breaker.
Low Voltage Trip Misadjusted			2				Determine desired setting and recalibrate low voltage set potentiometer
Defective Circuit Breaker CB13			5	2*			Replace circuit breaker
Defective Circuit Breaker CB14		4					Replace circuit breaker
Defective Circuit Breaker CB15				3**			Replace circuit breaker
Incorrect Wiring on V1-V2 Terminals						4	Check continuity of circuits to locate - correct wiring.
Auxiliary Contactor on K-26 Defective			4				Check continuity of circuits to locate - replace contactor.
Auxiliary Contactor on K-23 and K-24 Defective			3				Check continuity of circuits to locate - replace contactor.
Defective MPM Module	6	5					Replace module.

* Air cooled and unit mounted starters only
**MSPS retrofit kit only

INSTALLATION INSTRUCTIONS FOR ADDITION OF AUTO RESTART PANEL TO MOTOR STARTER PROTECTION SYSTEM (OPTIONAL)

See Figure 10.

1. Mount the auto restart panel in the upper right hand of the Motor Starter Protection System cabinet. There are two screw holes provided in the back panel.
2. Remove the plug in the door and install the pilot light and pushbutton station. This will indicate that a line switch shut-down and automatic restart has occurred.
3. Run two wires from the pilot light to Terminals 2 and 3 on the auto restart panel.
4. Connect one short wire from the pushbutton to the ground side of the indicating light and run a second wire back to Terminal 9 on the auto restart panel.
5. Remove the jumpers between 2 and 2A on the Motor Starter Protection System cabinet main terminal strip. Connect wires 6 and 7 from the auto restart panel to Terminals 2 and 2A, respectively, of the MSPS main terminal strip.
6. Disconnect the existing shielded wires E3 and E4 from CB14 on the MSPS cabinet door and reconnect E4 to Terminal 8 on the auto restart panel. Thoroughly insulate E3 with tape and tuck it away as it is no longer required.
7. CB14 is now inoperative.
8. Connect the 115 VAC terminal (No. 1) on the auto restart panel to XX1 on the MSPS main terminal strip.
9. Connect the grounded terminal (No. 2) on the auto restart panel to X2 on the MSPS main terminal strip.
10. Run wires from Terminals 4 and 5 on the auto restart panel to the appropriate connections in the chiller control panel.

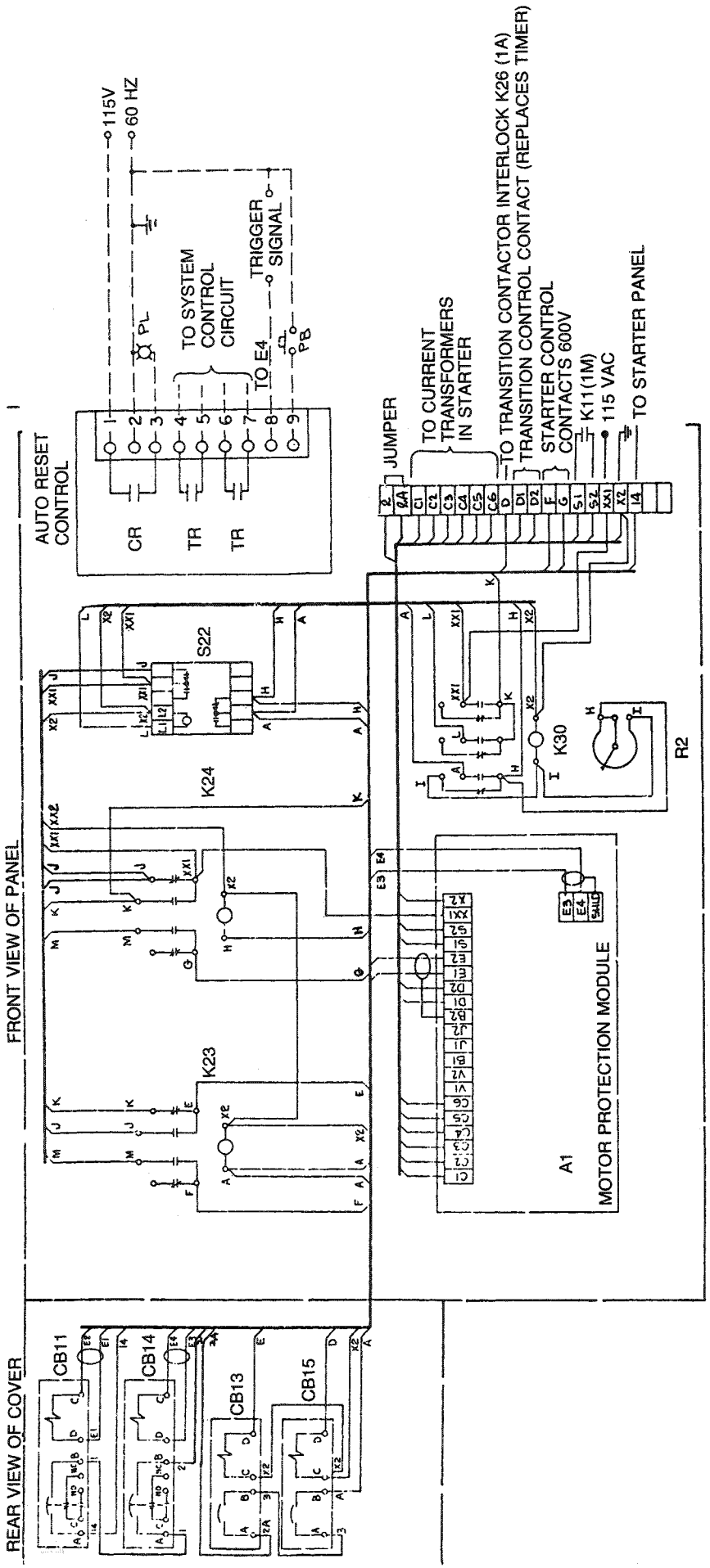

FIGURE 10 - Auto Restart Panel Wiring

MOTOR STARTER PROTECTION SYSTEM TYPICAL SEQUENCE OF OPERATION

(See drawing 2305-1604 or page 5 of MPCA-10M-1)

Upon a call for a start from the unit control panel power to terminal 14 (line 1) in the fault trip indicator module (A13) power flows through the fault trip indicator contacts (line 1). Power flows on to energize pilot relay K23 (line 1). It also flows through the S22 timer NC contact (line 3) to energize pilot relay K24 (line 2). Power also feeds through the K30 relay NC contact (line 4) to energize the K30 relay.

The K30 NC contacts (line 4) open leaving the K30 relay (line 3) to be held energized through the low control voltage potentiometer R2 (line 3). The K30 NO contacts (line 2) close holding pilot relay K24 (line 2) energized and power to the low control voltage potentiometer R2 (line 3). Two sets of K30 NO contacts (line 7) close energizing the S22 timer (line 7).

Both pilot relays K23 and K24 are now energized. The K23 NO contacts (line 6) which are wired in series with the K24 NO contacts (line 7) both close allowing power to flow between terminal F (line 5) and terminal G (line 7) causing the starter contactors to begin the unit start sequence.

A set of NO auxiliary contacts (line 12) on the main starter contactor close causing the Motor Protection Module A1 to begin to monitor locked rotor current draw and begin timing the motor acceleration time.

The K23 and K24, NO and NC, self monitoring contacts (lines 5 and 6) switch preventing the "Starter Circuit" fault indicator CB13 (line 5) from tripping.

The S22 timer NC contact (line 3) opens requiring that power be held to pilot relay K24 (line2) and the potentiometer R2 (line 3) through the relay K30 contact (line 2).

An S22 timer NC contact (line 4) opens to remove power from terminal J (line 5), this prevents the "Starter Circuit" fault indicator (line 5) from tripping.

If the starter is a reduced voltage or current type (eg. Star-Delta or Auto transformer) which requires transition to occur this is initiated by the Motor Protection Module A1 when motor current drops below 80 percent of unitrated load current draw, indicating the motor is up to full running speed. It initiates transition by closing a set of contacts giving a transition signal (lines 10 and 11).

If the unit does not complete transition once initiated, that is one of the transition contactors (the transition resistor contactor on a Star-Delta type starter) indicated by a set of K26 (1A NO contact (line 8) remains closed too long, the "Transition Circuit" fault indicator will trip shutting down the machine.

Upon completion of transition the Motor Protection Module A1 monitors the rated load current of the unit to prevent overloads.

CenTraVac Motor Starter Protection System Sequence of Operation for Each Fault Condition

(See Drawing 2305-1604 or MPCA-IOM-1 page 5)

Following are the descriptions of the conditions which will cause each fault trip indicator to trip when the Motor Protection System is operating correctly.

Motor Overload CB-11 – There are three faults which will cause the Motor Protection Module (MPM) to trip the "Motor Overload" fault indicator. They include:

1. Current draw in excess of rated load amperes. If at any time after the point when the MPM calls for transition to occur the unit current draw exceeds 107% of the rated load amperes the MPM is calibrated for, the MPM will send a signal to trip the "Motor Overload" fault indicator..
2. Current draw in excess of normal lock rotor amperes. If at any time during the time between the point when the motor is first energized and the point when the (MPM) calls for transition to occur the unit current draw exceeds the value set on the LRA potentiometer in the MPM, the MPM will send a signal to trip the "Motor Overload" fault indicator.
3. Excessive acceleration time – If the unit current draw does not drop to below 80% of rated load amperes following energization of the starter, indicating that the motor never reached full speed in the time set on the maximum acceleration time switches in the MPM, the MPM will send a signal to trip the Motor Overload" fault indicator.

Distribution Fault CB-14 – The MPM will trip the "Distribution Fault" fault indicator whenever there is a loss of line voltage to the unit when it is running. It is impossible to sense the actual loss of line voltage because as soon as the voltage loss occurs, the compressor motor begins to act as a generator and will product enough power to support all control functions for approximately 60 cycles.

For this reason the way the voltage loss is sensed is by monitoring current draw. The fact that makes this possible is that even when completely unloaded an induction motor draws at least 15% - 20% of its rated load amperes. On this basis, the Motor Protection Module monitors the main starter contactor to determine if the unit is running and the current draw of the unit to determine if it is drawing less than 15% of its rated load amperes. The main contact must be monitored so the MPM knows when the current is below 15% because of normal shutdown. If the contactor is closed and the current is below 15% of rated load amperes the MPM will send a signal to trip the "Distribution Fault" fault indicator.

Starter Circuit – CB-13. There are five faults which will cause the "Starter Circuit" fault indicator to trip. They include:

1. Intermittent control voltage or a fluttering flow switch (see Drawing 2305-1604 or page 5 of MPCA-IOM-1) The sequence of operation to protect against this is as follows: The unit is operating in a normal manner and control power flickers at terminal 14 (line 1) . Upon loss of power pilot relays K23 (line1) and K24 (line 2), relay K30 (line3) and timer S22 (line 7) will drop out. If control power returns to terminal 14 (line 1) in less than 10 seconds pilot relay K23 (line 1) will pull in. Relay K30 and pilot relay K24 will not be able to pull in because the S22 timer contact (line 3) is timed too close, it takes 10 seconds to close following a control power loss. The pilot relay K23 NO contact (line 5) will close and because the pilot relay K24 NC contact (line 5) does not open power will be applied to trip the "Starter Circuit" fault indicator CB13 (line 5) locking the machine off until manually reset. The S22 timer uses a 10 second timing period because if control power has been off for this period of time, the standard control panel will have locked the unit off and will not allow a restart until it has gone through a post lube & prelube period which eliminates any danger of compressor or starter damage because of rapid recycling.
2. Low Control Voltage – the sequence of operation to protect against this is as follows: The unit is operating in a normal manner and the control voltage drops to the trip level set with the Low Control Voltage Protection potentimeter R2. At this point, the low control voltage protection relay K30 drops out. The K30 relay NO contact (line 2) opens deenergizing pilot relay K24 (line 2). Both pilot relay K24 NO contacts (line 7) open dropping out the starter and sending power to "Starter Circuit" CB13 (line7) fault indicator causing it to trip.
3. Pilot Relay Failure – The sequence of operation to protect against pilot relay failure, either failure to pull in or drop out, is as follows: The unit calls for a start and the pilot relay K23

(line 1) pulls in correctly, but the pilot relay K24 (line 2) does not pull in; this could be for any reason, burned out coil, loose wire, etc. The pilot relay K23 NO contact (line 5) closes but the pilot relay L24 NC contact (line 5) will not open. This will send power to the "Starter Circuit" CB13 (line 7) fault indicator causing it to trip. The other pilot failure mode would be if one of the relays would not drop out i.e., it was welded in. This is protected against as follows: The fact that a pilot relay is welded in will be caught on the next unit shutdown. Assume for this example that the pilot relay K24 will not drop out. When the unit shuts down the pilot relay K23 NC contact (line 6) will close. The pilot relay K24 NO contact will hang in the closed position. This will send power to the "Starter Circuit" CB13 (line 7) fault indicator causing it to trip.

4. Interminent Control Voltage Protection Timer (S22) Failure. The timer could fail in two modes, either contacts open or contacts closed. If the Timer S22 fails with contacts open, upon a call for a start the pilot relay K23 (line 1) will be energized. The pilot relay K24 (line 2) will not be energized because the Timer S22 NC contact (line 3) is open and holding pilot relay K24 out. The pilot relay K23 NO contact (line 5) closes and pilot relay K24 NC contact (line 5) will remain closed. This will send power to the "Starter Circuit" CB13 fault indicator (line 5) causing it to trip.n

   If the timer S22 fails with contacts closed upon a call for a start the pilot relays K23-K24 will pull in normally. The Timer S22 NC contact (line 4) will not open, this will send power through the pilot relay K23 contacts (line 5) causing it to trip.

5. Low Control Voltage Protection Control Relay (K30) Failure
   The relay K30 could fail in two modes, either contacts open or contacts closed. If the relay K30 fails with the contacts open upon a call for a start, the pilot relay K23 (line 1) will be energized. The relay K30 contacts (line 7) will not close and so the timer S22 (line 7) will not be energized. The Timer S22 NO contact (line 4) will not open, this will send power through the pilot relay K23 contacts (line 5) and to the "Starter Circuit" CB13 fault indicator (line 5) causing it to trip.

If the relay K30 fails with the contacts closed, when the unit shuts down, the relay K30 NO contacts (line 7) will not open. This will allow power to flow through the pilot relay K23 NC contacts (line 6) to the "Starter Circuit" CB13 fault indicator (line 5) causing it to trip.

6. Low Control Voltage Protection Potentiometer (R2) Failure

If the low voltage pot. (R2) (line 3) fails, it will fail open. If the unit is running in a normal manner when the low voltage potentiometer R2 fails this will cause the relay K30 (line 3) to drop out. The relay K30 NO contacts (line 2) open dropping the pilot relay K24 (line 2). The pilot relay K24 NC contacts (line 5) close sending power through the pilot relay K23 NO contact (line 5) which will remain closed, to the "Starter Circuit" CB13 fault indicator (line 5) causing it to trip.

Transition Circuit CB 15 – The "Transition Circuit" CB15 fault indicator (line 8) will be tripped whenever the transition contactor auxiliary K26 (line 8) remains closed for a period of time longer than that allowed by the "Transition Circuit" CB15 fault indicator (1.5 seconds). This indicates that the unit did not complete transition properly.

A1 - Motor Protection Module

This module contains the electronic circuitry to monitor the following and protect against the following faults.

1. Running motor overload
2. Locked rotor motor overload
3. Excessive acceleration time
4. Distribution fault

It also initiates transition based on motor current draw when the motor is up to speed.

See Service Bulletin CTV-SB-22A for detailed information on operation and calibration.

A12 - Starter Protection Module

This module contains the following components.

1. The pilot relays(K23 and K24)
2. The low control voltage protection control relay(K30)
3. The low control voltage protection potentiometer(R2)
4. The interminent control voltage protection timer(S22)

It provides protection against the following faults.

1. Interminent control voltage/flow switch flutter
2. Low control voltage
3. Pilot relay malfunction
4. S22 timer failure(fail safe)

A13 - Fault Trip Indicator Module

This module contains the four manual reset circuit breakers which lock the machine out in the event of a fault occurrence signal from the

Motor Protection Module or Starter Protection Module. These circuit breakers include:

1. Motor overload(CB11)
2. Starter circuit(CB13)
3. Distribution fault(CB14)
4. Transition circuit(CB15)

Motor Protection Retrofit Component Description

*CB11 - Motor Overload Fault Indicator

This is an instantaneous trip manual reset fault trip circuit breaker which is tripped by the Motor Protection Module(A1) in the event of a motor overload. See the description covering the Motor Protection Module for faults included under the description "Motor Overload."

*CB13 - Starter Circuit Fault Indicator

This is a time to trip manual reset fault trip circuit breaker which is tripped in the event of:

1. A pilot relay malfunction(burn out or weld in)
2. An occurrence of intermintent control voltage or fluttering flow switch
3. Low control voltage
4. S22 timer failure
5. K30 relay failure

The breaker trips after a period of approximately 1.5 seconds of power to the circuit breaker coil.

*CB14 - Distribution Fault Indicator

This is an instantaneous trip manual reset fault trip circuit breaker which is tripped by the Motor Protection Module(A1) in the event of a distribution fault. See the description covering the Motor Protection

Module for faults included under the description "Distribution Fault."

*CB15 - Transition Circuit Fault Indicator

This is a time to trip manual reset fault trip circuit breaker which trips in the event of the transition resistor contactor or contact auxiliary staying in too long. This breaker trips after a period of approximately 1.5 seconds of power to the circuit breaker coil.

NOTE: All fault indicator circuit breakers are designed to be shunt trip devices not current sensitive devices as normally applied.

K23-K24 Pilot Relays

These relays are used to energize the main contactor of the starter when a start is called for. They also are wired in such a way that if either one malfunctions the "Starter Circuit" (CB13) fault indicator will trip. The contact rating of these relays is 600 volts at 3 amperes maximum.

K30 - Low Control Voltage Protection Relay

This is a control relay which is used in combination with the R2 Potentiometer to provide protection against low control voltage.

R2 - Low Control Voltage Protection Potentiometer

This is a potentiometer which is used in combination with the K30 relay to provide an adjustable low voltage trip point. It is wired in series with the coil of the K30 relay and operates by dropping a set voltage prior to the K30 coil. This causes the K30 to drop out at some set voltage and trip the "Starter Circuit"(CB13) fault indicator. The rating of this variable resistor is 3.5 K at 3.25 watts.

S22 - Interminent Control Voltage Protection Timer

This is a solid state timer with two normally closed, instant open, time to close contacts.

When the timer is energized, its contacts open instantly and remain open as long as it is energized. When the timer is de-energized, its contacts remain open for 10 seconds and then close.

This timer is not adjustable.

T2 - T3 - T4 Current Transformers

These are three current transformers which feed a current signal to the Motor Protection Module to tell it what load the machine is operating at.

They must provide a 2.0 to 5.0 amp signal at unit rated load at a 0.02 V.A. burden.

MOTOR OVERLOAD TROUBLE ANALYSIS CHART

SYMPTOM						
	MOTOR OVERLOAD TRIPS					
POSSIBLE CAUSE	At the Instant of First Contactor Hit	During Acceleration Before Transition	Transistion	After Transition	At Power Up of Control Circuit	
Incorrect LRA Trip Point Setting	1					Determine Proper Setting and Recalibrate
LRA TRIP Time Set Incorrectly	2	2			1*	+Determine Proper Setting and Recalibrate
Incorrect Current Calibrator Adjustment or Installation	3		1	1		Determine Proper Setting and Recalibrate
Current Transformers Incorrectly Wired (Dot Polarity Incorrect)	4	3	2			Rewire Current Transformers
Excessive Running Motor Current Draw	5	5		2**		Check Current Load Limiting Circuitry and Calibration
Faulty Circuit Breaker CB11	6	6	4	3		Replace Circuit Breaker
Defective MPM Module	7	7	6	5	2	Confirm Failure-Replace MPM
Frequency Selector Switch Incorrectly Set		4				Check Selector Setting
Motor Acceleration Time Too Long		+1				Contact La Crosse Service
MPM Module Sensitivity High			5			See Service Bulletin CTV-SB-65
Refrigerant Carryover Occurring When Machine is Up to Speed			3	4		Determine the Cause of Carryover - Correct

MOTOR OVERLOAD TROUBLE ANALYSIS CHART

* The Motor Overload Circuit Breaker will trip instantly at initial control circuit power up if all LRA Trip Time Switches are in the OFF position.

** If the LLR allows any overshoot to occur the unit may experience momentay overloads causing the Circuit Breaker to trip. If the LLR cannot be adjusted to prevent this overshoot a variable orifice restrictor(RSR-1)may be installed in the 2016 lbs main air supply line before the pilot positioner. This should be adjusted to slow the vane stroke as necessary to prevent overshoot.

\+ See Charts below for nominal settings. On units which start with high evaporator temperatures these times may have to be extened to prevent nuisance trip outs.

TYPICAL MAXIMUM ACCELERATION TIME SETTINGS
FOR CVHA AND CVHB DESIGN MACHINES

STARTER TYPE	RECOMMENDED MAXIMUM ACCELERATION TIME SETTINGS
Star-Delta	12 Seconds
Auto-Transformer	8 Seconds
Across-The-Line	4 Seconds

TYPICAL MAXIMUM ACCELERATION TIME SETTINGS
FOR CVHE DESIGN MACHINES

STARTER TYPE	RECOMMENDED MAXIMUM ACCELERATION TIME SETTINGS
Star-Delta	40 Seconds
Auto-Transformer	22 Seconds
Across-The-Line	12 Seconds

Related
Solid State Overload List
All Bulletins are located in Service Bulletins Book

CTV-SB-22B	.....	Centravac Solid State Motor Protection Module Operation Calibration and Troubleshooting Version 1
CTV-SB-65	.....	Solid State Overhaul Nuisance Tripout.
CTV-SB-74	.....	Installation of Distribution Fault Automatic Reset Kit.
CTV-SB-75B	.....	Cutler Hammer Solid State Overload Upgrade Version Discussion 1, 2, 3, 4
CTV-SB-76	.....	Nuisance Distribution Fault Trips Following Unit Shutdown
CTV-SB-77	.....	Operation, Calibration and Troubleshooting Version 1 thru 4
CVHE-SB-12A	.....	Surge Suppressor on Power Supply
CVHE-SB-15	.....	Starter Fault Breaker/K10 Relay Race (CVHE A thru J Design)

TRANE®
AIR CONDITIONING

FILE INFORMATION:

DIVISION TAB-TRANE REFRIGERATION PRODUCTS
PRODUCT TAB-LIQUID CHILLERS-CENTRIFUGAL
CenTraVac
MODEL TAB-CTV
LITERATURE ITEM-SERVICE BULLETIN

LITERATURE FILE NO.

CTV-SB-22B

GENERAL SERVICE BULLETIN

Since the Trane Company has a policy of continuous product improvement, it reserves the right to change specifications and design without notice. The installation and servicing of the equipment referred to in this booklet should be done by qualified, experienced technicians.

2/25/83
SUPERSEDES CTV-SB-22A
DATED 10/5/81

SUBJECT: CENTRAVAC SOLID STATE MOTOR PROTECTION MODULE - OPERATION, CALIBRATION AND TROUBLESHOOTING

INTRODUCTION:

The purpose of this Service Bulletin is to discuss the operating characteristics of the Trane Motor Protection Module (MPM) and to outline the correct procedures for calibration and troubleshooting. The module is presently supplied on all Air Cooled CenTraVacs and Water Cooled CenTraVacs equipped with the new Trane Unit-Mounted Starter. In addition, it is also part of the new Motor Starter Protection System (MSPS) Retrofit Kit marketed by Service Products. This Bulletin also discusses the operation, calibration and troubleshooting procedure for the Motor Starter Protection System Retrofit Kit.

DISCUSSION:

Motor Protection Module (MPM) Features:

Listed below are the operational functions and features of the Motor Protection Module:

1. To provide precise compressor motor overload protection.
2. To protect against excessive locked rotor (in-rush) current draw.
3. To limit the length of time that in-rush current may be drawn.
4. To protect the unit from damage which can be caused by an electrical distribution fault.
   NOTE: A distribution fault is defined as a complete loss of line voltage for a period of less than 60 cycles.
5. The module initiates starter transition when the compressor reaches full speed.
6. To provide a DC voltage signal which is proportional to load.
7. It can be adjustable to compensate for high line voltage.
8. It is adjustable for 50 or 60 Hertz operation.

© THE TRANE COMPANY 1983
COMMERCIAL AIR CONDITIONING DIVISION
LA CROSSE, WISCONSIN 54601
PRINTED IN U.S.A.

Motor - Starter Protection System (MSPS) Features:

The Motor Starter Protection System Retrofit Kit consists of three modules. One is the Motor Protection Module previously discussed, another houses the fault indicator circuit breakers and the third contains the Starter Protection System. The features and functions of the starter protection system are listed below:

1. To protect against the effects of pilot relay contact welding.
2. To protect against the effects of the loose control wiring.
3. To protect against the effects of intermittent control voltage (ie., fluttering flow switches, etc.)
4. It incorporates an adjustable undervoltage lock out for the control circuit.
5. The circuits are wired to protect the transition Resistor against excessive operating time.

CALIBRATION PROCEDURES (MOTOR PROTECTION MODULE)

CAUTION: WHENEVER WORKING ON THE MPM, AS WITH ANY ELECTRICAL EQUIPMENT, STOP THE MOTOR AND DISCONNECT ALL POWER TO THE UNIT. FAILURE TO DO SO MAY RESULT IN ACCIDENTAL SHOCK OR DEATH BY ELECTROCUTION. PREVENT PERSONAL INJURY BY ALWAYS DISCONNECTING ELECTRICAL POWER BEFORE WORKING ON ELECTRICAL EQUIPMENT.

NOTE: On units equipped with the Distribution Fault function, a small circuit board mounted in the center of the MPM must be tilted outward to perform MPM calibration. This is done by gently pulling on the two black tabs, located on the top of the circuit board, and tilting it down on its hinges.

I. Line Frequency Adjustment:

The MPM can operate on either 50 or 60 Hertz electrical systems. The line frequency is set as follows:

A. The installation line frequency must first be determined. (60 Hertz for all U.S. installations.)
B. The frequency switch (see Figure 1) should then be set to the position which corresponds to the installation frequency (see Figure 2).
C. Write in the setting made on the MPM nameplate (see Figure 3).

II. Compressor Motor Overload Setup:

The overload is set by adjusting the resistance of the current calibrator. The MPM is designed so that with the current calibrator correctly set, the overload will trip at 107% of the motor rated load current. The use of a 107% trip point prevents nuisance full load trip outs while still protecting the compressor motor from potentially damaging overloads.

The correct procedure for setting the current calibrator is as follows:

A. Determine the Rated Load Current (RLA) and the current transformer ratio for the unit. Where the actual jobsite voltage is equal to or lower than the specified voltage rating shown on the unit nameplate, the current calibrator setting can be established based on the nameplate RLA.

When the actual voltage is higher than the specified voltage, see Section V (High Voltage Compensation).

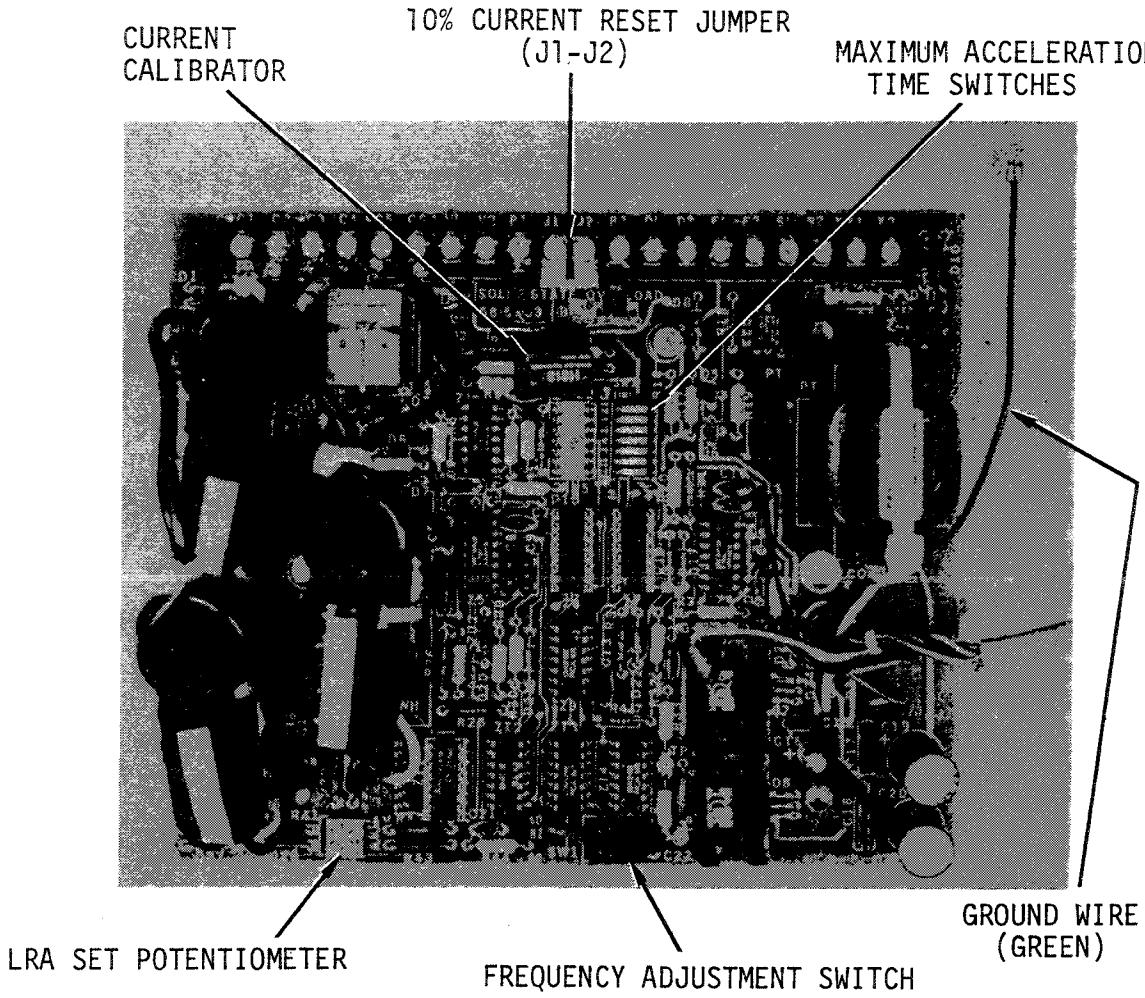

FIGURE 1 - MOTOR PROTECTION MODULE



50 Hz POSITION

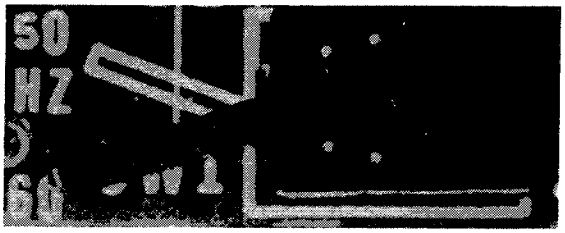

60 Hz POSITION

FIGURE 2 - LINE FREQUENCY ADJUSTMENT SWITCH

TRANE NO.	
CALIBRATOR NO.	
CALIBRATOR OHMS	C.T. RATIO /5
MOTOR LRA _____ RATIO ____ % MOTOR RLA _____	
L.R. TRIP TIME SEC.	50☐ 60☐ HZ

FIGURE 3 - MOTOR PROTECTION MODULE NAMEPLATE

If the unit is equipped with power factor correction capacitors which are connected on the load side of the overload current transformers, the RLA shown on the unit nameplate will have to be recalculated for the purpose of setting the overloads. On CenTraVacs shipped with factory installed power factor capacitors, the adjusted RLA should be shown on the electronic overload cover and the overload set accordingly. To determine the adjusted RLA on other units, the machine should be run to full load and amperage readings taken on the load and line sides of the capacitor terminal points. The nameplate RLA should be multiplied by the ratio of the current on the line side of the capacitors to current on the load side of the capacitors. This gives the adjusted RLA to be used to set the current calibrator. (See equation and example below.)

$$\text{Adjusted RLA} = \text{Nameplate RLA} \times \frac{\text{line side current}}{\text{load side current}}$$

Example: Motor Rating (RLA) = 100 amps
Current on line side of capacitors = 84 amps
Current on load side of capacitors = 92 amps

$$\text{Adjusted RLA} = 100 \text{ amps} \times \frac{84 \text{ amps}}{92 \text{ amps}} = 91 \text{ amps}$$

If the power factor capacitors are connected on the line side of the MPM current transformers or if the capacitor leads are run through the current transformers with the motor leads (Figure 4) the RLA must not be adjusted.

The motor nameplate RLA should be used to set the current calibrator in this case.

Refer to Engineering Bulletin EB-CTV-44 for additional information and recommendations concerning field addition of power factor correction capacitors.

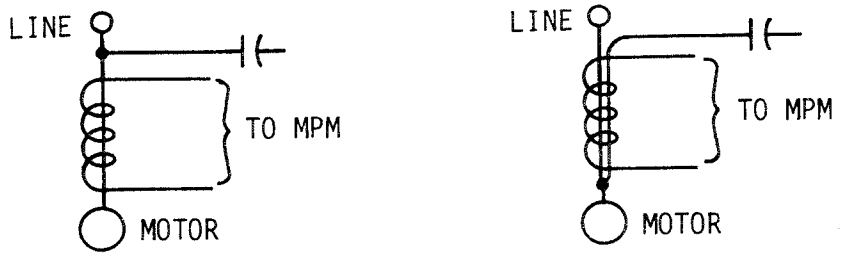

FIGURE 4 - Current Transformers

B. Once the correct RLA has been determined, the rated load secondary current (I_{sec}) from the current transformer can be determined. The value of I_{sec} at full load is dependent upon the location of the current transformers. The correct methods to determine I_{sec} are discussed below:

1. Current Transformer Monitoring Line Current
   If the current transformers are located to monitor line current, the value of the I_{sec} is determined by dividing the current transformer ratio into the RLA. (See the equation and example below.)

$$I_{sec} = RLA \div (CT\ ratio)$$

Example RLA = 91 amps

$$CT\ ratio = \frac{100}{5}$$

$$I_{sec} = \left(91 \div \frac{100}{5}\right)$$

$$I_{sec} = 4.55$$

2. Current Transformers Monitoring Phase Current
   If the current transformers are located in a star-delta starter in such a way that they monitor phase current, the value of I_{sec} is determined by dividing the current transformer ratio into the RLA and multipling this quantity by 0.58. (See the equation and example below.)

$$I_{sec} = RLA \div CT\ Ratio) \times 0.58$$

Example: RLA = 91 amps

$$CT\ Ratio = \frac{100}{5}$$

$$I_{sec} = (91 \div \frac{100}{5} \times 0.58$$

$$I_{sec} = 2.64$$

NOTE: When donut-type current transformers are used, the wires passed through them are sometimes wrapped around and passed through more than once. When this is done, the CT ratio is effectively divided by the number of times the wire passes through the CT. This means a 200/5 CT with the wire passed through it twice should be treated as a 100/5 CT.

C. With the I_{sec} value found above, use Table 1 to determine the correct current calibrator and its setting. For the above example in which the line current is being monitored (I_{sec} = 4.55), the correct current calibrator would be H818. The correct calibrator setting would be 82.6 ohms. With the calibrator setting adjusted in this manner, the overload trip point would be 107% of the nameplate RLA.

D. To set the current calibrator, it must be removed from the module. Using a digital ohmmeter (3-1/2 digit accuracy minimum) set the resistance of the calibrator to the value taken from Table 1.

E. Replace the current calibrator in the module. Write the calibrator number and setting on the MPM nameplate.

NOTE: With the current calibrator set correctly and the unit operating at full load, a DC voltage of approximately 8.25 VDC should exist across terminals V1-V2 in the MPM.

TABLE 1 - CURRENT CALIBRATOR TABLE

I^2 SEC AMPERE RATING		NUMBER ON CURRENT CALIBRATOR	POTENTIOMETER ADJUSTMENT RESISTANCE (OHMS)	I^2 SEC AMPERE RATING		NUMBER ON CURRENT CALIBRATOR	POTENTIOMETER ADJUSTMENT RESISTANCE (OHMS)
MIN.	MAX.			MIN.	MAX.		
2.01	2.05	H816	185	3.51	3.55	H817	106
2.06	2.10	H816	180	3.56	3.60	H817	105
2.11	2.15	H816	176	3.61	3.65	H817	103
2.16	2.20	H816	172	3.66	3.70	H818	102
2.21	2.25	H816	168	3.71	3.75	H818	101
2.26	2.30	H816	165	3.76	3.80	H818	99.2
2.31	2.35	H816	161	3.81	3.85	H818	97.9
2.36	2.40	H816	158	3.86	3.90	H818	96.6
2.41	2.45	H816	155	3.91	3.95	H818	95.4
2.46	2.50	H816	151	3.96	4.00	H818	94.2
2.51	2.55	H817	148	4.01	4.05	H818	93.0
2.56	2.60	H817	146	4.06	4.10	H818	91.8
2.61	2.65	H817	143	4.11	4.15	H818	90.7
2.66	2.70	H817	140	4.16	4.20	H818	89.6
2.71	2.75	H817	138	4.21	4.25	H818	88.5
2.76	2.80	H817	135	4.26	4.30	H818	87.5
2.81	2.85	H817	133	4.31	4.35	H818	86.5
2.86	2.90	H817	130	4.36	4.40	H818	85.5
2.91	2.95	H817	128	4.41	4.45	H818	84.5
2.96	3.00	H817	126	4.46	4.50	H818	83.5
3.01	3.05	H817	124	4.51	4.55	H818	82.6
3.06	3.10	H817	122	4.56	4.60	H818	81.7
3.11	3.15	H817	120	4.61	4.65	H818	80.8
3.16	3.20	H817	118	4.66	4.70	H818	79.9
3.21	3.25	H817	116	4.71	4.75	H818	79.1
3.26	3.30	H817	114	4.76	4.80	H818	78.2
3.31	3.35	H817	113	4.81	4.85	H818	77.4
3.36	3.40	H817	111	4.86	4.90	H818	76.6
3.41	3.45	H817	109	4.91	4.95	H818	75.8
3.46	3.50	H817	108	4.96	5.00	H818	75.1

III. Locked Rotor Current Lockout Adjustment

The MPM protects the compressor motor from excessive LRA current draw during start-up. It does this by tripping the motor overload circuit breaker any time the set LRA is exceeded. The correct procedure for setting the LRA trip point is as follows:

A. The LRA current trip point setting is dependent upon the type of starter being used with the CenTraVac compressor motor.

B. The LRA current trip point is set using the LRA set potentiometer (Figure 1).

C. The correct setting position for the LRA set potentiometer as applied to different types of starters are shown in Figure 5.

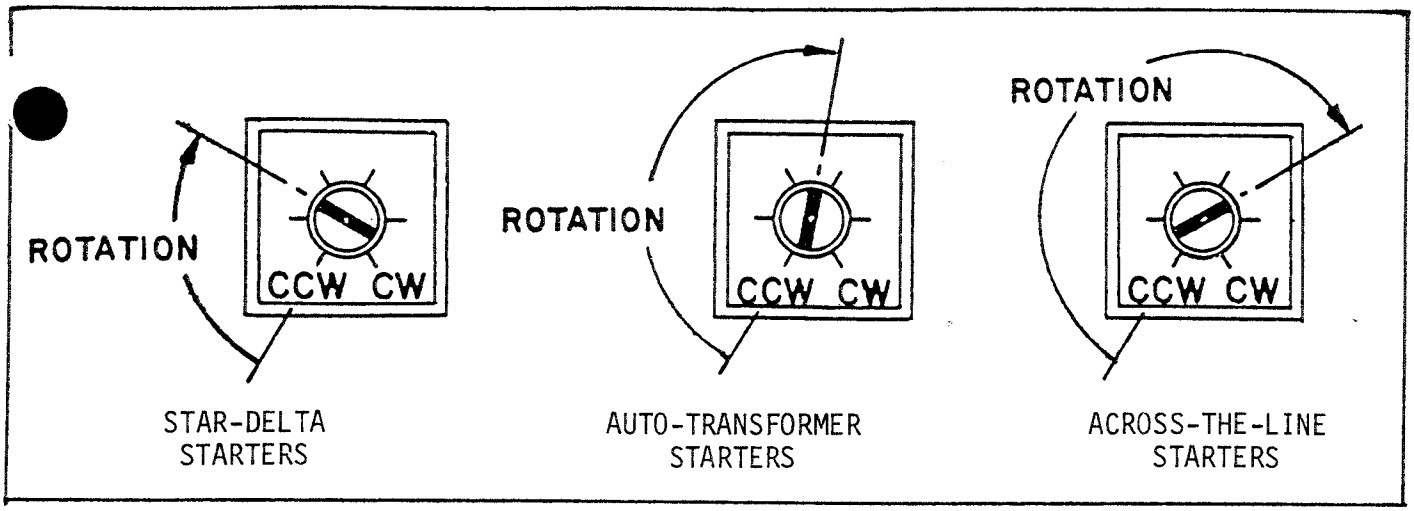

FIGURE 5 - LRA SET POTENTIOMETER POSITIONS FOR DIFFERENT TYPE STARTERS

D. To set the LRA set potentiometer, insert a screw driver in the adjusting slot and turn potentiometer to the fully counter-clockwise (CCW) stop. This establishes a reference position. From this point, the potentiometer should be rotated clockwise to the position, shown in Figure 5, which corresponds to the compressor motor starter being used.

E. As can be seen by the calibration markings on the LRA set potentiometer, this is a rough setting only. If it is found that the "motor overload" circuit breaker trips <u>immediately</u> (1 sec) upon energization of the starter, the LRA current trip point may have to be set higher. Doing this will not harm the operation of the MPM or the compressor motor.

F. Write the nameplate LRA and the nameplate RLA on the MPM nameplate. See Figure 3.

G. Calculate the "RATIO ___%" using the formula below. Write this on the nameplate. See Figure 3.

$$\text{Ratio \%} = \frac{\text{Motor LRA*}}{\text{Motor RLA}} \times 100\%$$

Example: Motor RLA - 100 AMPS

Motor LRA = 200 AMPS

$$\frac{200 \text{ AMPS}}{100 \text{ AMPS}} \times 100\% = \text{Ratio } 200\%$$

* Locked rotor amperes (LRA) is the reduced value obtained depending on the method of starting. See Table 2.

TABLE 2 STARTING CHARACTERISTICS FOR VARIOUS TYPES OF MOTOR STARTERS

TYPE OF STARTER	% TAP	STARTING CHARACTERISTICS - % OF RATED VALUE		
		MOTOR VOLTAGE	MOTOR LRA CURRENT	MOTOR TORQUE
Full Voltage Type Magnetic - X - Line	n/a	100	100	100
Reduced Voltage Types				
Auto-Transformer	80	80	64	64
	65	65	42	42
	50	50	25	25
Primary Reactor	80	80	80	64
	65	65	65	42
	50	50	50	25
Reduced - Inrush Types				
Star-Delta	n/a	100	33	33
Open or Closed Transition	n/a	100	33	33

IV. Maximum Acceleration Time Set

The MPM limits the maximum acceleration time the motor can undergo by tripping the "Motor Overload" circuit breaker, locking the machine off whenever the machine does not transition in the time period set on the acceleration time adjustment (Figure 1). This prevents the motor from drawing LRA for an excessive period of time and overheating the motor. The maximum acceleration time is set as follows:

A. Determine the desired maximum acceleration time (between 1 and 63 seconds) for the unit. Table 3 gives recommended settings for typical units. This setting may vary, depending on the type of unit, type of starter and jobsite conditions. It should be set, based on the typical acceleration time for the particular unit and jobsite conditions.

TABLE 3 - TYPICAL MAXIMUM ACCELERATION TIME SETTINGS

STARTER TYPE	RECOMMENDED MAXIMUM ACCELERATION TIME SETTINGS
Star-Delta	12 Seconds
Auto-Transformer	8 Seconds
Across-The-Line	4 Seconds

B. Once the desired value is known, the combination of switches on the LRA time adjustment which adds to this value should be switched to the "ON" position (see Figure 6).

NOTE: If none of the switches are in the "ON" position, the unit will not start. The MPM allows no acceleration time in this situation and the "Motor Overload" circuit breaker will trip immediately upon attempted start-up.

12 SECONDS = 8 + 4
TURN ON SWITCHES 3 & 4

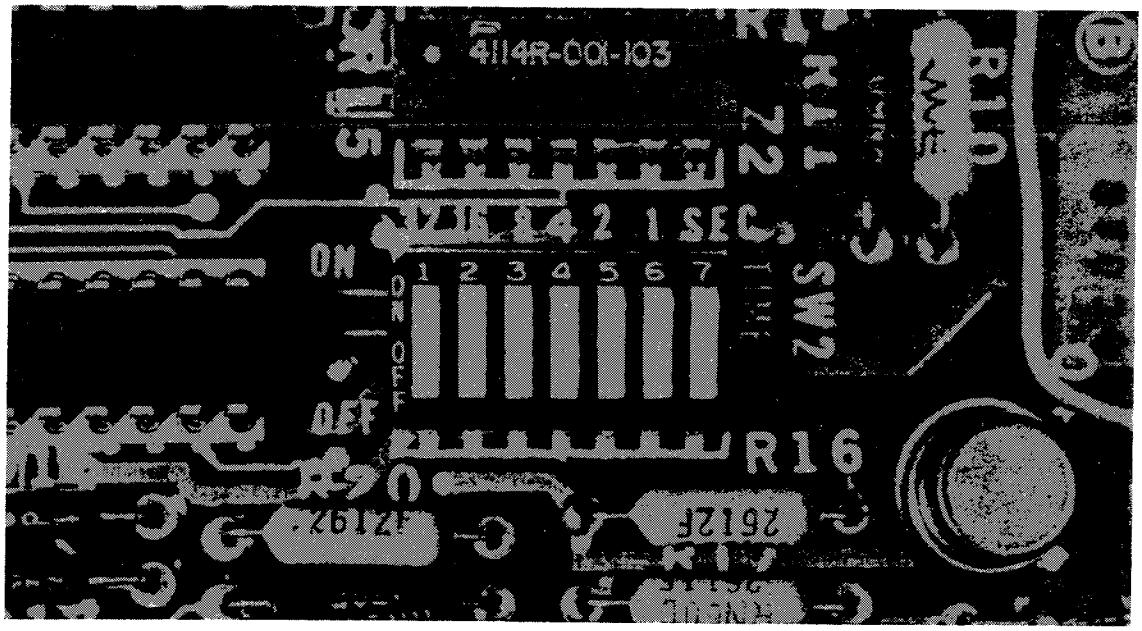

FIGURE 6 - MAXIMUM ACCELERATION TIME SWITCH

C. Write the LRA time adjustment setting on the MPM nameplate. See Figure 3.

V. High Voltage Compensation:

The RLA shown on the unit nameplate is based on original design conditions and the nominal voltage ordered. The actual jobsite voltage quite often varies from the nominal. Higher than nominal line voltage permits the motor to produce higher than rated horsepower without motor current draw in excess of nameplate. To prevent overloading of the motor due to higher than rated voltage, the MPM should be recalibrated. This can be done in either of two ways:

A. By removal of 10% current reset jumper from terminals J1 - J2 in the MPM (see Figure 1), the module is automatically recalibrated so that approximately 90% of the motor nameplate current rating is the new "rated" current for the application. The MPM should be setup normally, as removal of the jumper recalibrates all functions of the MPM.

B. The MPM can also be recalibrated to compensate for high voltage by resetting the current calibrator. The proper value is determined by multiplying the I_{sec} value, determined in the Compressor Motor Overload Setup section of this Service Bulletin, by the ratio of the rated voltage to the actual line voltage. (see the equation and example below.)

$$\text{New } I_{sec} = I_{sec} \times \frac{\text{rated voltage}}{\text{actual line voltage}}$$

Example: Original $I_{sec} = 4.55$
Rated Voltage = 460 volts
Actual line voltage = 485 volts

$$\text{New } I_{sec} = 4.55 \times \frac{460 \text{ volts}}{485 \text{ volts}} = 4.32$$

The new I_{sec} value is then used to enter Table 1 and determine a new current calibrator setting. The calibrator should be reset to this value. This will recalibrate all other MPM functions, compensating for the high voltage condition.

C. Whenever the MPM is recalibrated for high voltage, the LRA Potentiometer should be turned up one space higher than indicated on Figure 4 to prevent nuisance tripouts at start-up. The reason for this is that higher than nameplate LRA current draw would occur. This must be compensated for by turning up the LRA Potentiometer.

Any calibration of the module, such as removal of the J1 - J2 jumper or recalibration of the current calibrator should be noted on the MPM module cover along with the reason for recalibration.

NOTE: When any recalibration of the motor overload is performed on a water-cooled CenTraVac equipped with a pneumatic LLR, the LLR must be recalibrated just as the overload. If this is not done, nuisance overload tripouts will occur.

VI. CVAC Load Limiting Control Calibration

On CVAC's, the MPM controls the load limiting of the motor through a load proportional DC voltage which it sends to the vane control module. If the MPM has been calibrated correctly, the vane control module should start load limiting at 98% of RLA. The load proportional DC voltage can be measured across terminals V1 - V2 of the MPM. At rated load, this voltage will be -8.25 VDC. This voltage varies linearly with the machine running amperage.

Example: 100% RLA = (-)8.25 VDC
98% RLA = (-)8.25 x .98 = (-)8.09 VDC

VII. Vane Control Module Load Limit Calibration

A. The current calibrator must be correctly set before the control module load limiting can be calibrated.

B. The unit should then be started.

C. The voltage across terminals V1 - V2, in the control module, should be measured while the machine is being loaded. The control module current limiting calibrator should be set so the machine begins load limiting when the V1-V2 voltage reaches (-)8.09 volts DC. This corresponds to a machine load of 98% of FLA.

D. Manually unload and load the machine, rechecking to make sure load limiting begins at a V1-V2 signal voltage of (-)8.09 volts DC. The unload - load lights can be used to verify proper limiting as well as visually observing the damper motor.

E. The load limiting of the control module is now set correctly.

VIII. Dry Running Starters Equipped with the Motor Protection Module

Starters equipped with the Motor Protection Module can be dry run at startup in the same manner as starters not so equipped. There are two differences which should be noted.

A. Before the starter can be dry run, the Distribution Fault circuit Breaker must be disconnected. This can be done by simply removing a wire from the Distribution Fault Circuit Breaker. If this is not done, the starter will not sequence, but will lockout on distribution fault instantly upon initiation of the start.

   This occurs because the distribution fault trip is initiated when the motor current drops below 20% of RLA with the M1 contactor energized. See the "Distribution Fault Trip Operation" section of this Bulletin for the reasoning behind this. The only time the above circumstances can occur, is during an actual distribution fault or a starter dry run.

B. The other difference which will be noticed, is that immediately upon energization of the dry run, the starter will go through transition.

   This happens because the MPM initiates transition on the basis of motor current draw. During a normal startup, the vanes are closed which allows the motor current to drop from LRA to a value below RLA. When the motor current drops from LRA to 80% of RLA during start, the MPM initiates transition. During a dry run, there is no current draw, so the MPM, immediately (1 sec) initiates transition.

IX. Distribution Fault Circuit Breaker Operation

A distribution fault is defined as a loss of line voltage for less than 60 electrical cycles. This type of short duration power interruption can be damaging to many types of induction motor driven equipment.

The damage occurs because an induction motor acts as a generator for several seconds after power is disconnected. The voltage generated by the motor can hold in control relays and starter contactors when a voltage loss occurs. The period of time the contactors are held in, is approximately 60 electrical cycles or 1 second for a Water Cooled CenTraVac, and 20 cycles or 1/3 second, for an Air Cooled CenTraVac.

If line voltage is re-established during the period of time the contactors are being held in by the motor generated voltage, and the two voltages are out of phase, motor torques may occur which are 6 to 10 times normal running torques. These torques occur as the motor is pulled into phase and may be in either the forward or reverse direction. These high torques cause severe overloading of the impeller hub area, with resultant upsetting of the impeller keyway and in severe cases cracking or destruction of the impellers.

The Motor Protection Module detects a distribution fault by monitoring current draw and the M1 contactor. The tripping of the Distribution Fault Circuit Breaker is initiated based on the fact that, in normal operation, only during the occurrances of an actual distribution fault is it found that the motor current draw is less than 20% of RLA and the M1 contactor is energized at the same time. An induction motor will normally always draw over 20% of RLA, even when completely unloaded; and whenever the M1 contactor is energized, the motor is running. The only exceptions occur during a distribution fault or during a starter dry run.

The distribution fault lockout is initiated when the motor current drops below 20% of RLA with the M1 contactor energized. The motor Protection Module senses this set of conditions to be a voltage loss for the reasons explained in the previous two paragraphs. Tripping of the Distribution Fault Circuit Breaker is completed within 6 electrical cycles (1/10 of a second) of the time when the voltage loss occurs.

It should be noted that this provides a way to check for the proper operation of the distribution fault function of the Motor Protection Module. The Distribution Fault Circuit Breaker should trip instantly if it is left connected during a starter dry run.

CALIBRATION PROCEDURE (MOTOR STARTER PROTECTION RETROFIT KIT ONLY)

I. Low Voltage Lockout Calibration

The Motor-Starter Protection System Retrofit Kit incorporates an adjustment which allows the minimum operating control voltage to be set. If the unit experiences a control voltage below the setting of the low voltage lockout, the Starter Protection Module (SPM) locks the machine out with the "Starter Fault" circuit breaker. The low voltage lockout adjustment is on the outside of the Starter Protection Module. It is a slotted potentiometer type adjustment located on the side of the SPM module. (See Figure 7.) It can be set using the following guides:

A. Turning the low voltage set potentiometer fully counter-clockwise gives a trip point of 80 volts ± 10%.
B. Turning the low voltage set potentiometer fully clockwise gives a trip point of 108 volts ± 10%.
C. The nominal trip voltage can be adjusted to any value between these extremes by adjusting the low voltage set potentiometer. See the following equation:

(Desired Voltage - 80) ÷ 28 x 100% = Percent rotation
Amount of potentiometer rotation required

Example: Desired lockout voltage = 94 volts
(94 - 80) ÷ 28 x 100% = 50%

Turn the potentiometer 50% of the way from fully CCW to fully CW.

NOTE: A good nominal setting is 94 volts, or 50% rotation.

II. Start Circuit Protection

A "Starter Circuit" tripout will occur whenever the control circuit power to the starter is momentarily interrupted. Such interruptions could include a fluttering flow switch, loose wiring or a defective control. There is no calibration which can be performed on this circuit.

III. Transition Circuit Protection

A "Transition Circuit" tripout will occur if the transition resistors remain in the circuit for over one and a half seconds. This protects the resistors from conditions which will cause rapid burnout. There is no calibration which can be performed on this circuit.

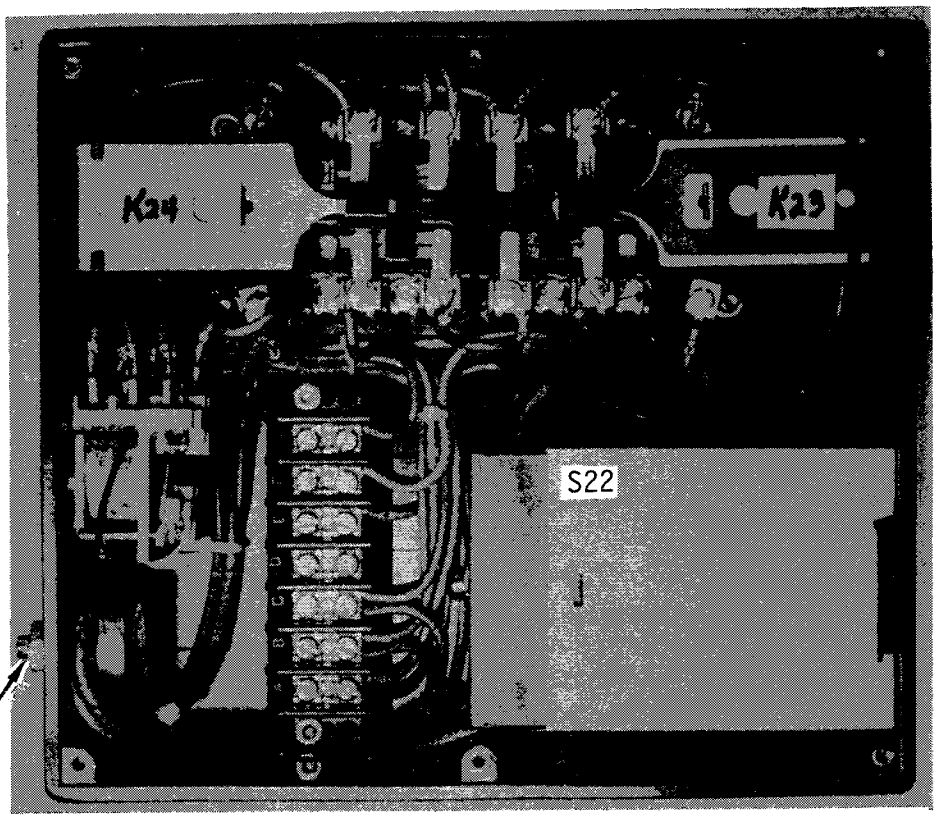

FIGURE 7 - STARTER PROTECTION MODULE

TROUBLESHOOTING MPM/MPS

The wiring diagrams on the following pages give typical wiring schemes for the Motor Protection Module and Motor Starter Protection System Retrofit Kit. Figure 8 shows the wiring of the MPM by description of the terminal board stud's interconnections. Figure 9 is a typical wiring diagram of a Unit Mounted Starter equipped with a MPM. Figure 10 is a typical wiring diagram of the Motor Starter Protection Retrofit Kit.

The charts on the following pages give troubleshooting sequences for the Motor Protection Modules. Problem symptoms are listed across the top of the chart, possible causes in the left hand columns and recommended solutions in the right hand column. The numbers in the columns under the problem symptoms indicate possible causes and solutions for those symptoms. The numbering indicates the probability of the corresponding cause/solution being the one which is causing the problem; 1 being the most likely, 2 the second most likely, and so on.

TROUBLESHOOTING NUISANCE TRIPPING

SYMPTOM/ POSSIBLE CAUSE	MOTOR OVERLOAD TRIPS	DISTRIBUTION FAULT TRIPS	STARTER FAULT TRIPS	TRANSITION FAULT TRIPS	RECOMMENDED ACTION
Incorrect Current Calibrator Adjustment or Installation	3				Determine proper setting, re-calibrate and install.
Incorrect LRA Trip Point Setting	4				Determine proper setting and re-calibrate LRA trip setting.
High Voltage Re-calibration Jumper Removed	7				Determine if jumper should be removed to compensate for high voltage.
Excessive Running Motor Current Draw	1				Check for faulty compressor motor.
Excessive LRA Motor Motor Current Draw	2				Check for faulty compressor motor.
Frequency Selector Switch Incorrectly Set	5				Check selector setting.
Motor Acceleration Time to Long	8				Contact La Crosse Service
Low Voltage To Unit			3**		Contact Power Company
Motor Current Drops Below 20% RLA		5			Contact La Crosse Service
Distribution Fault (complete voltage loss) Occurs For Over 1-1/2 Cycles.		1			Contact Power Company
Current Transformers Incorrectly Wired (dot polority incorrect)	9	2			Rewire Current transformers
Faulty Circuit Breaker - CB11	10				Replace circuit breaker.
1M (K27) Auxiliary Contactor Hanging In		4			Replace contactor.
Flow Switch or Similar Safety Device Fluttering			1**		Check water flows, check for air in system, check for correct instal-lation.
Loose Control Circuit Wiring			2**		Check continuity of circuits to locate-tighten wiring
Low Voltage Trip 1 Misadjusted			4**		Readjust trip to desired value.

(Continued on Page 16)

TROUBLESHOOTING NUISANCE TRIPPING
(continued)

SYMPTOM/ POSSIBLE CAUSE	MOTOR OVERLOAD TRIPS	DISTRIBUTION FAULT TRIPS	STARTER FAULT TRIPS	TRANSITION FAULT TRIPS	RECOMMENDED ACTION
Chattering 2M (K28) Auxiliary or Main Contactor		3			Replace contactor
S-22 Timer Defective			7**		Replace contactor
Defective Circuit Breaker CB-13			8		Replace circuit breaker
Locked Rotor Trip Time Set Incorrectly	6				Consult La Crosse Service for proper setting
Defective Circuit Breaker CB-15				2**	Replace circuit breaker.
Transition Resistor Hanging In (K-26)			9*	1**	Replace contactor
Welded Pilot Relay Contacts (K23-K24)			5		Replace contactor
Defective Pilot Relay Coils (K23-K24)			6		Replace contactor coils
Defective MPM Module	11	6			Replace module

* Air Cooled and Unit Mounted Starters Only
** MSPS Retrofit Kit Only

UNIT WILL NOT FUNCTION

SYMPTOM POSSIBLE/ CAUSE	MOTOR OVER-LOAD WILL NOT TRIP	DISTRIB-UTION FAULT WILL NOT TRIP	STARTER FAULT WILL NOT TRIP	TRANSITION FAULT WILL NOT TRIP	STARTER WILL NOT TRANSITION	INCORRECT V1-V2 CONTROL VOLTAGE	RECOMMENDED ACTION
Verify 120 volts Across X1 and X2	1	1	1	1	1	1	Check Power Supply Wiring
Verify Correct Wiring & Closure on S1-S2 (K-27)	2	2					Check continuity of circuits to locate correct wiring or replace contactor as required.
Incorrect Current Calibrator Adjust-ment or Installa-tion	3	3			2	2	Determine proper set-ting and recalibrate LRA trip setting.
Current Trans-former Incorrectly Wired or Defective	4				3	3	Check continuity of circuits to locate correct wiring.
Faulty Circuit Breaker CB11	5						Replace circuit breaker.
Low Voltage Trip Misadjusted			2				Determine desired setting and re-calibrate low voltage set potentiometer.
Defective Circuit Breaker CB13			5	2*			Replace circuit breaker
Defective Circuit Breaker CB14		4					Replace circuit breaker
Defective Circuit Breaker CB15				3**			Replace circuit breaker
Incorrect Wiring on V1-V2 Terminals						4	Check continuity of circuits to locate-correct wiring.
Auxiliary Contactor on K-26 Defective			4				Check continuity of circuits to locate-replace contactor
Auxiliary Contactor on K-23 and K-24 Defective			3				Check continuity of circuits to locate-replace contactor
Defective MPM Module	6	5					

* Air Cooled and Unit Mounted Starters Only
** MSPS Retrofit Kit Only

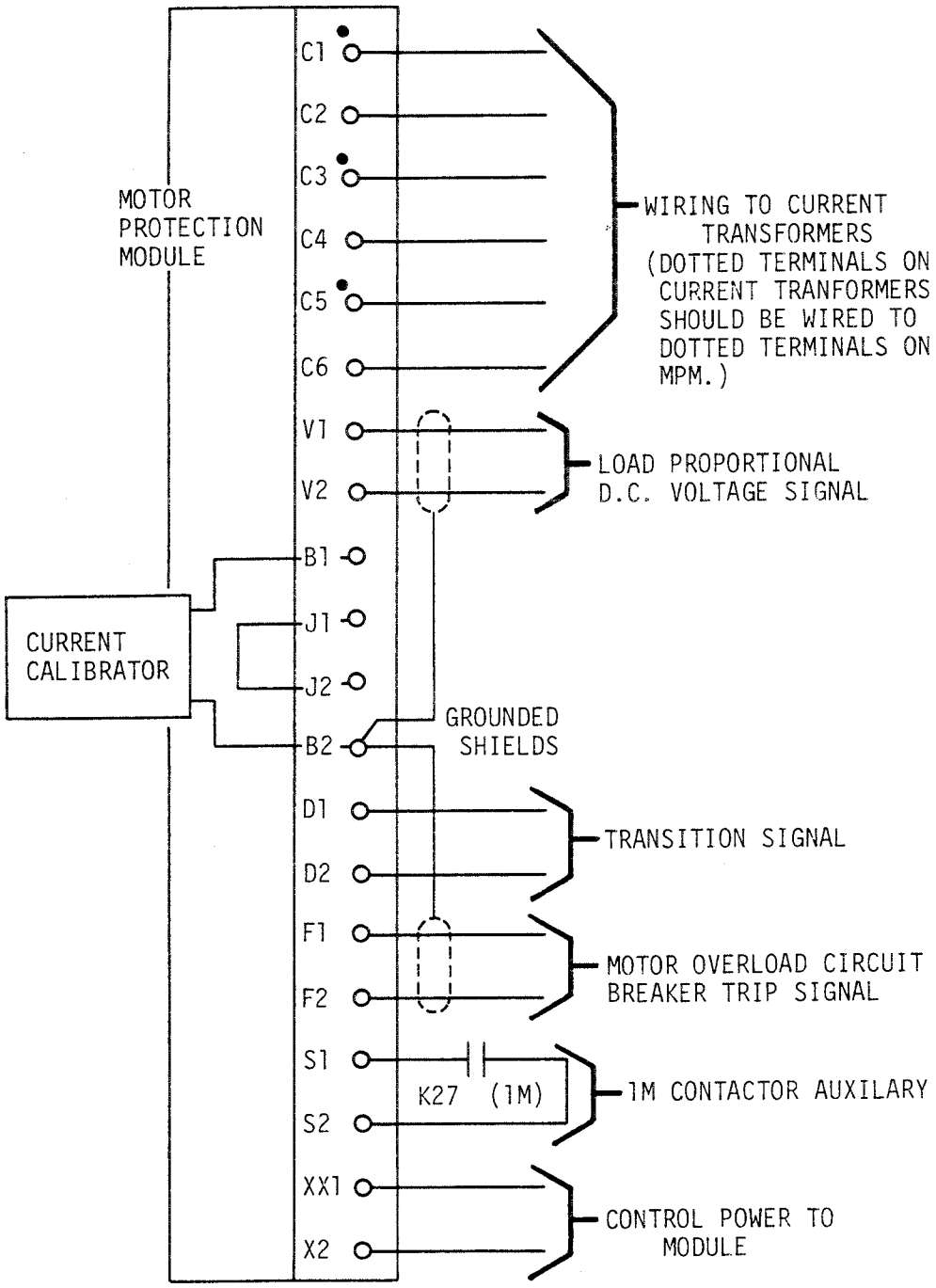

FIGURE 8 - MOTOR PROTECTION MODULE INTERCONNECTIONS

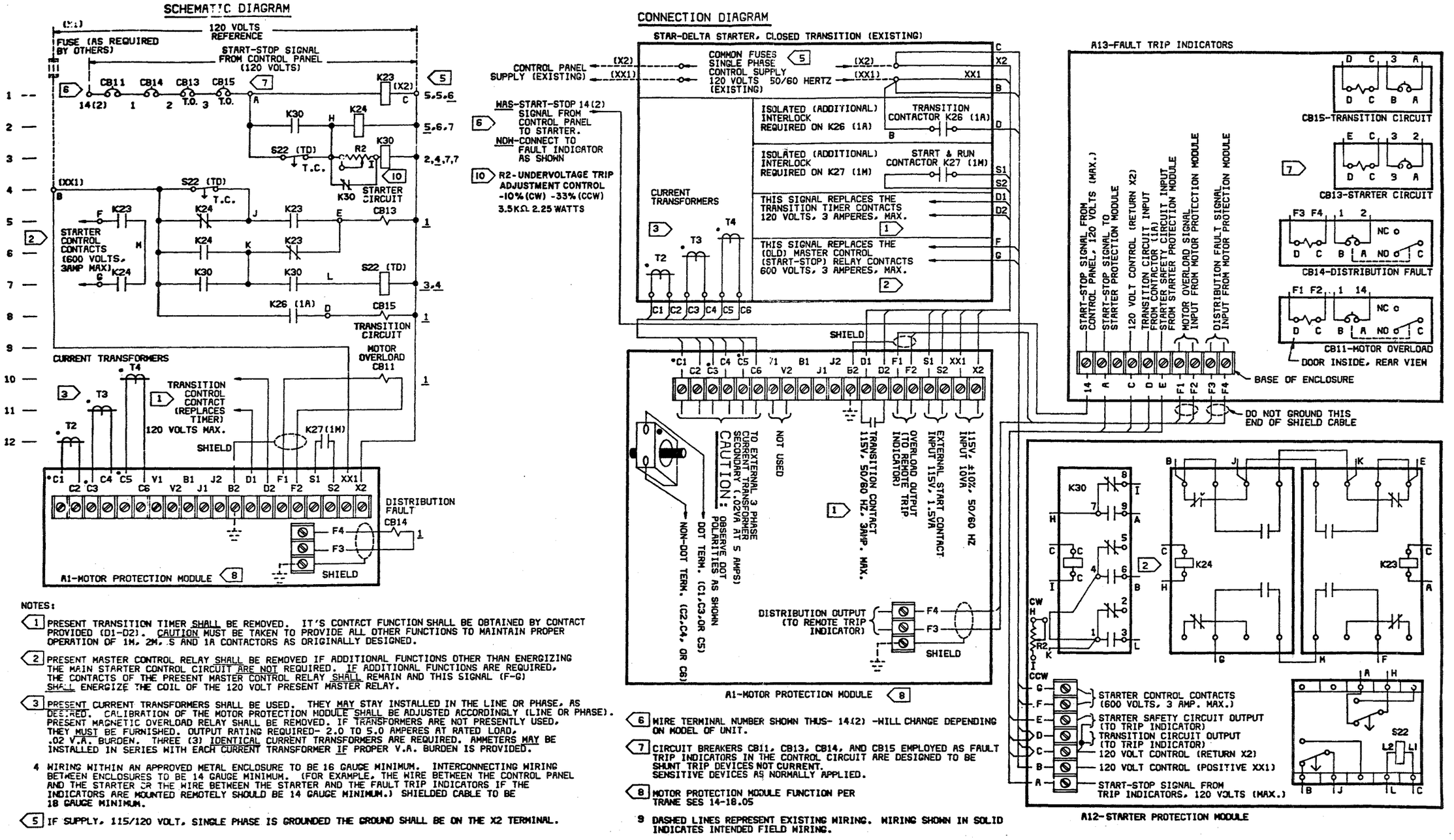

NOTES:

1. PRESENT TRANSITION TIMER SHALL BE REMOVED. IT'S CONTACT FUNCTION SHALL BE OBTAINED BY CONTACT PROVIDED (D1-D2). CAUTION MUST BE TAKEN TO PROVIDE ALL OTHER FUNCTIONS TO MAINTAIN PROPER OPERATION OF 1M, 2M, S AND 1A CONTACTORS AS ORIGINALLY DESIGNED.

2. PRESENT MASTER CONTROL RELAY SHALL BE REMOVED IF ADDITIONAL FUNCTIONS OTHER THAN ENERGIZING THE MAIN STARTER CONTROL CIRCUIT ARE NOT REQUIRED. IF ADDITIONAL FUNCTIONS ARE REQUIRED, THE CONTACTS OF THE PRESENT MASTER CONTROL RELAY SHALL REMAIN AND THIS SIGNAL (F-G) SHALL ENERGIZE THE COIL OF THE 120 VOLT PRESENT MASTER RELAY.

3. PRESENT CURRENT TRANSFORMERS SHALL BE USED. THEY MAY STAY INSTALLED IN THE LINE OR PHASE, AS DESIRED. CALIBRATION OF THE MOTOR PROTECTION MODULE SHALL BE ADJUSTED ACCORDINGLY (LINE OR PHASE). PRESENT MAGNETIC OVERLOAD RELAY SHALL BE REMOVED. IF TRANSFORMERS ARE NOT PRESENTLY USED, THEY MUST BE FURNISHED. OUTPUT RATING REQUIRED- 2.0 TO 5.0 AMPERES AT RATED LOAD, .02 V.A. BURDEN. THREE (3) IDENTICAL CURRENT TRANSFORMERS ARE REQUIRED. AMMETERS MAY BE INSTALLED IN SERIES WITH EACH CURRENT TRANSFORMER IF PROPER V.A. BURDEN IS PROVIDED.

4. WIRING WITHIN AN APPROVED METAL ENCLOSURE TO BE 16 GAUGE MINIMUM. INTERCONNECTING WIRING BETWEEN ENCLOSURES TO BE 14 GAUGE MINIMUM. (FOR EXAMPLE, THE WIRE BETWEEN THE CONTROL PANEL AND THE STARTER OR THE WIRE BETWEEN THE STARTER AND THE FAULT TRIP INDICATORS IF THE INDICATORS ARE MOUNTED REMOTELY SHOULD BE 14 GAUGE MINIMUM.) SHIELDED CABLE TO BE 18 GAUGE MINIMUM.

5. IF SUPPLY, 115/120 VOLT, SINGLE PHASE IS GROUNDED THE GROUND SHALL BE ON THE X2 TERMINAL.

6. WIRE TERMINAL NUMBER SHOWN THUS- 14(2) -WILL CHANGE DEPENDING ON MODEL OF UNIT.

7. CIRCUIT BREAKERS CB11, CB13, CB14, AND CB15 EMPLOYED AS FAULT TRIP INDICATORS IN THE CONTROL CIRCUIT ARE DESIGNED TO BE SHUNT TRIP DEVICES NOT CURRENT SENSITIVE DEVICES AS NORMALLY APPLIED.

8. MOTOR PROTECTION MODULE FUNCTION PER TRANE SES 14-18.05

9. DASHED LINES REPRESENT EXISTING WIRING. WIRING SHOWN IN SOLID INDICATES INTENDED FIELD WIRING.

FIGURE 10 - TYPICAL MOTOR-STARTER PROTECTION SYSTEM ELECTRICAL DIAGRAMS

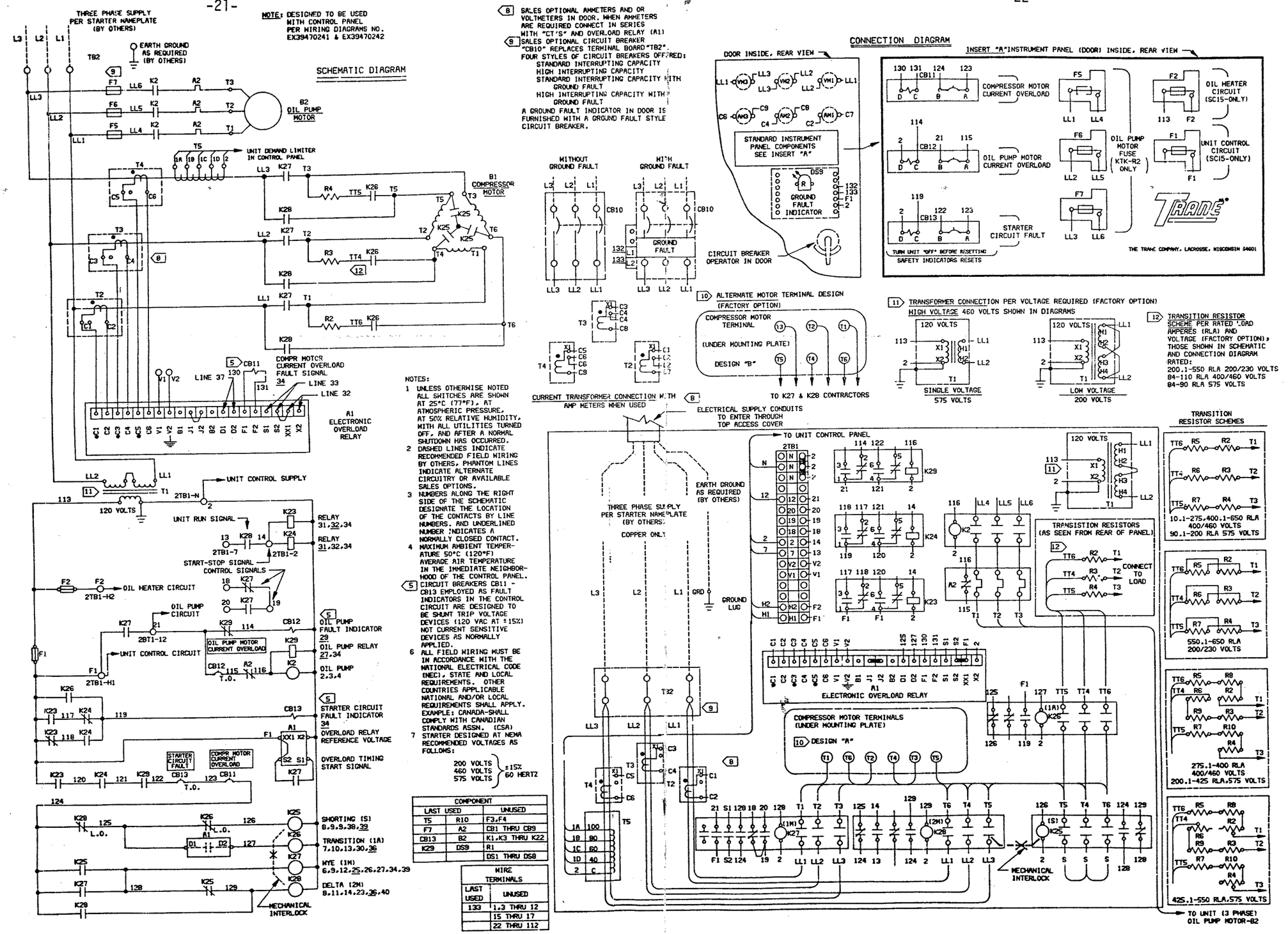

8 SALES OPTIONAL AMMETERS AND OR VOLTMETERS IN DOOR. WHEN AMMETERS ARE REQUIRED CONNECT IN SERIES WITH "CT'S" AND OVERLOAD RELAY (A1)

9 SALES OPTIONAL CIRCUIT BREAKER "CB10" REPLACES TERMINAL BOARD "TB2". FOUR STYLES OF CIRCUIT BREAKERS OFFERED:
- STANDARD INTERRUPTING CAPACITY
- HIGH INTERRUPTING CAPACITY
- STANDARD INTERRUPTING CAPACITY WITH GROUND FAULT
- HIGH INTERRUPTING CAPACITY WITH GROUND FAULT

A GROUND FAULT INDICATOR IN DOOR IS FURNISHED WITH A GROUND FAULT STYLE CIRCUIT BREAKER.

CONNECTION DIAGRAM

10 ALTERNATE MOTOR TERMINAL DESIGN (FACTORY OPTION)

11 TRANSFORMER CONNECTION PER VOLTAGE REQUIRED (FACTORY OPTION)
HIGH VOLTAGE 460 VOLTS SHOWN IN DIAGRAMS

12 TRANSITION RESISTOR SCHEME PER RATED LOAD AMPERES (RLA) AND VOLTAGE (FACTORY OPTION), THOSE SHOWN IN SCHEMATIC AND CONNECTION DIAGRAM
RATED:
200.1-550 RLA 200/230 VOLTS
84-110 RLA 400/460 VOLTS
84-90 RLA 575 VOLTS

TRANSITION RESISTOR SCHEMES

NOTES:
1. UNLESS OTHERWISE NOTED ALL SWITCHES ARE SHOWN AT 25°C (77°F), AT ATMOSPHERIC PRESSURE, AT 50% RELATIVE HUMIDITY, WITH ALL UTILITIES TURNED OFF, AND AFTER A NORMAL SHUTDOWN HAS OCCURRED.
2. DASHED LINES INDICATE RECOMMENDED FIELD WIRING BY OTHERS, PHANTOM LINES INDICATE ALTERNATE CIRCUITRY OR AVAILABLE SALES OPTIONS.
3. NUMBERS ALONG THE RIGHT SIDE OF THE SCHEMATIC DESIGNATE THE LOCATION OF THE CONTACTS BY LINE NUMBERS. AND UNDERLINED NUMBER INDICATES A NORMALLY CLOSED CONTACT.
4. MAXIMUM AMBIENT TEMPERATURE 50°C (120°F) AVERAGE AIR TEMPERATURE IN THE IMMEDIATE NEIGHBORHOOD OF THE CONTROL PANEL.
5. CIRCUIT BREAKERS CB11 - CB13 EMPLOYED AS FAULT INDICATORS IN THE CONTROL CIRCUIT ARE DESIGNED TO BE SHUNT TRIP VOLTAGE DEVICES (120 VAC AT ±15%) NOT CURRENT SENSITIVE DEVICES AS NORMALLY APPLIED.
6. ALL FIELD WIRING MUST BE IN ACCORDANCE WITH THE NATIONAL ELECTRICAL CODE (NEC), STATE AND LOCAL REQUIREMENTS. OTHER COUNTRIES APPLICABLE NATIONAL AND/OR LOCAL REQUIREMENTS SHALL APPLY. EXAMPLE: CANADA-SHALL COMPLY WITH CANADIAN STANDARDS ASSN. (CSA)
7. STARTER DESIGNED AT NEMA RECOMMENDED VOLTAGES AS FOLLOWS:
   200 VOLTS
   460 VOLTS
   575 VOLTS
   ±15% 60 HERTZ

COMPONENT		
LAST USED		UNUSED
T5	R10	F3,F4
F7	A2	CB1 THRU CB9
CB13	B2	K1,K3 THRU K22
K29	DS9	R1
		DS1 THRU DS8

WIRE TERMINALS	
LAST USED	UNUSED
133	1,3 THRU 12
	15 THRU 17
	22 THRU 112

FIGURE 9 - TYPICAL UNIT MOUNTED STARTER ELECTRICAL DIAGRAMS

TRANE AIR CONDITIONING

FILE INFORMATION:

DIVISION TAB-TRANE REFRIGERATION PRODUCTS
PRODUCT TAB-LIQUID CHILLERS-CENTRIFUGAL
CenTraVac
MODEL TAB-CTV
LITERATURE ITEM-GENERAL SERVICE BULLETIN

LITERATURE FILE NO.

CTV-SB-65

GENERAL SERVICE BULLETIN

Since the Trane Company has a policy of continuous product improvement, it reserves the right to change specifications and design without notice. The installation and servicing of the equipment referred to in this booklet should be done by qualified, experienced technicians.

11/5/82

SUBJECT: CENTRAVAC SOLID-STATE OVERLOAD NUISANCE TRIPOUT

INTRODUCTION:

The purpose of this Service Bulletin is to discuss nuisance tripouts of the solid-state overload (Motor Protection Module) used on CVHA/CVHB CenTraVacs. Module modification may be required to prevent nuisance motor overload tripouts at starter transition. This bulletin applies only to CVHA and CVHB low voltage machines shipped prior to July 1982. Units shipped after July 1982 have SSOLs which have been modified to prevent nuisance tripouts.

Other CenTraVacs which have the motor protection module system field installed may also be affected.

DISCUSSION:

Some CVHA and CVHB CenTraVacs have exhibited a nuisance motor overload trip which may occur at transition on star/delta starters. This is caused by high transient currents produced during transition. These transient currents do not occur on all units. The occurrence is dependent upon the speed of starter operation (contact closure during transition), motor construction (manufacture of stator) and unit load at start-up.

A starter which transitions slowly (takes a relatively long time for the contactors to complete transition once it has been initiated) may allow the motor to slip out of phase with incoming power. The resulting slip then can produce a transient current as the starter connects to delta. Because of this, older style units on which motor/starter protection retrofit kits are being installed, may also be susceptible to these nuisance tripouts.

The original manufacturing tolerances inherent in stator windings also influence the transition transient currents. Therefore, even with two identical motors it is possible that one may experience nuisance tripout and the other may not. It is not possible to predict which machines may experience nuisance tripouts until the unit is actually operating under field conditions.

A heavy evaporator load at start, (warm evaporator water) will typically cause longer acceleration times. High starting load causes transient currents which are higher and of longer duration. Therefore, a unit which starts normally with cool evaporator water, may experience a nuisance tripout under an extremely hot start condition.

©THE TRANE COMPANY 1982
COMMERCIAL AIR CONDITIONING DIVISION
LA CROSSE, WISCONSIN 54601
PRINTED IN U.S.A.

Overload Identification:

As stated in the Introduction section of this Bulletin, units shipped after July 1982 are equipped with SSOLs which have been modified.

Before proceeding to the corrective action section of this bulletin, the overload module should be inspected to determine if it is the earlier version. Examine the terminal strip as shown in Figure 1. When looking into the SSOL with the terminal strip toward the top, as it is mounted in the starter, the fifth and sixth terminals from the right in an unmodified SSOL are labeled F1 and F2. Terminals 5 and 6 in a modified SSOL are labeled E1 and E2. The upper two screw terminals on the swing out of an unmodified SSOL circuit board are labeled F3 and F4. The modified SSOL terminals are labeled E3 and E4 (see Figure 2).

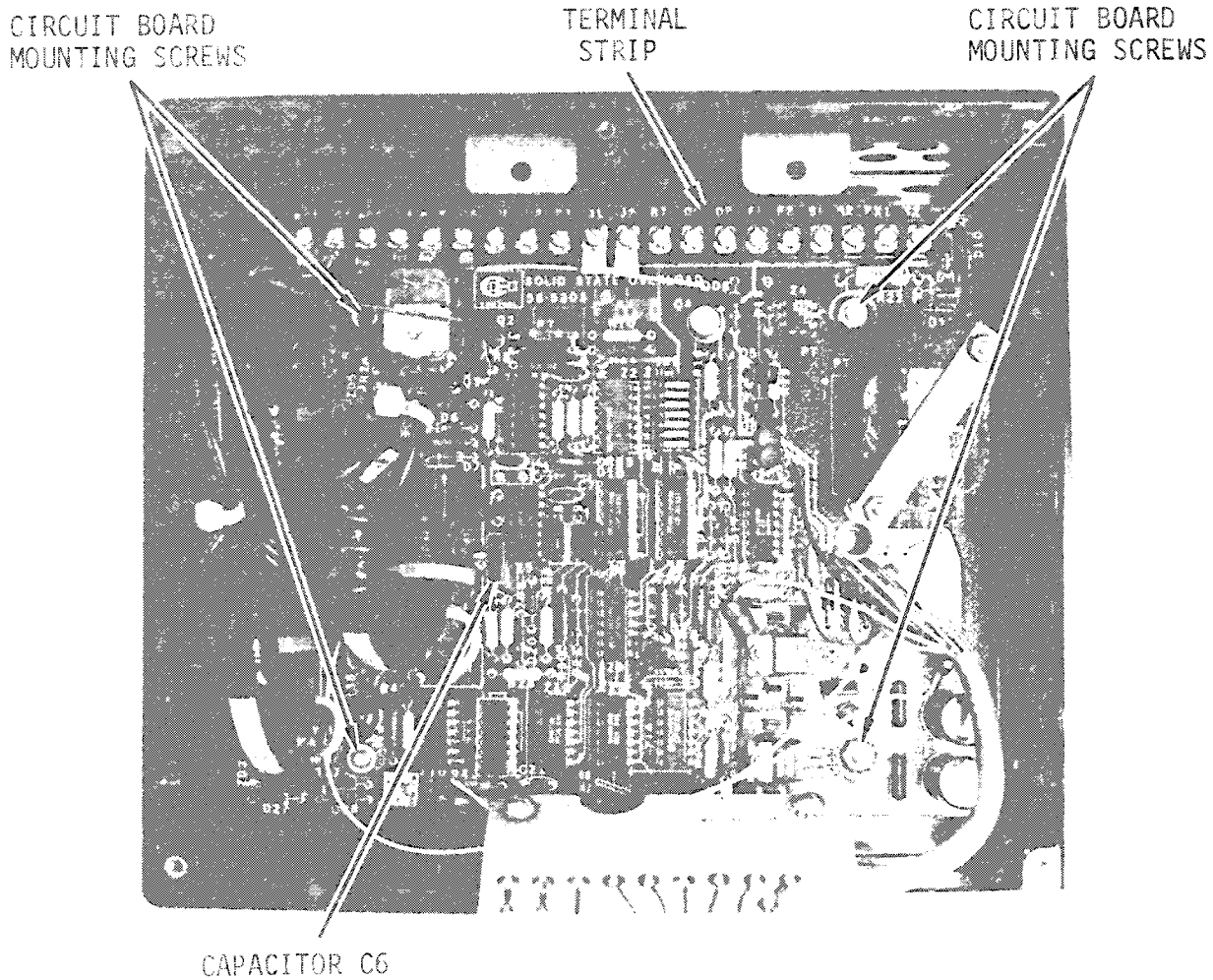

FIGURE 1 - Solid State Overload Circuit Board

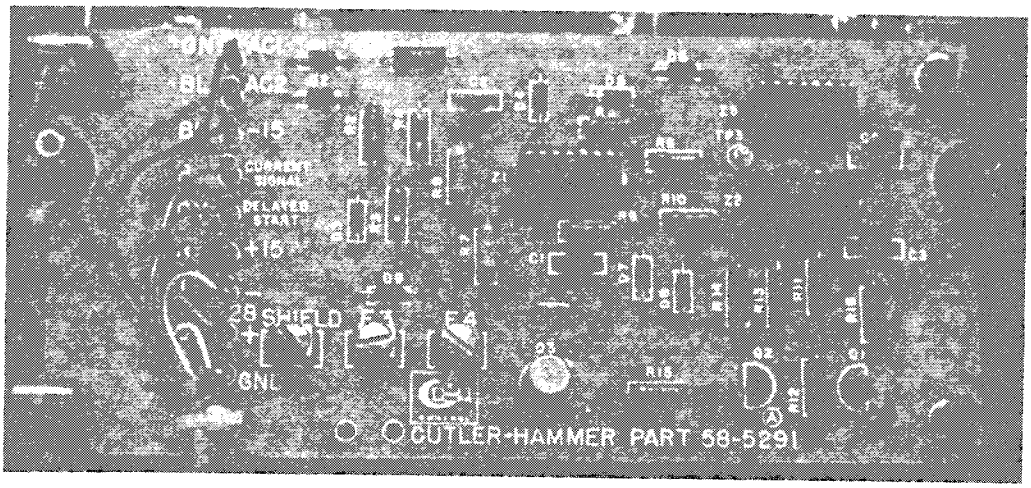

FIGURE 2 - Solid State Overload Swing Out Circuit Board

Any SSOL without the swing out circuit board is an unmodified model.

The modified SSOL has the changes described in this bulletin incorporated into its circuitry. Therefore, the modification described here is not applicable to a modified SSOL.

Tripout Diagnosis:

Proper identification of the exact time of the tripout occurrence is very important. The corrective action described in this bulletin applies only to tripouts which occur precisely as the contactors finish transition from start to delta. The motor will accelerate normally, transition will occur as the current drops to 80% of RLA as normal, but as soon as the contactors can be heard transitioning the "Motor Overload" fault trip indictor on the starter door will trip. If the nuisance tripout does not occur precisely at transition as described, the following corrective action does not apply.

CORRECTIVE ACTION:

Corrective action involves replacement of the C6 capacitor on the main circuit board in the SSOL. The C6 capacitor originally supplied on all SSOL's provides approximately an 8 cycle delay after transition before the module begins to sense running current. The addition of a larger capacitor increases the delay time preventing nuisance tripouts. The C6 capacitor that needs to be replaced is shown in Figure 1. This designation is written on the circuit board next to the capacitor. The capacitor has a flat rectangular shape and is orange in color.

For replacement, a 40 to 70 mf (micro farad) electrolytic capacitor rated between 35 and 50 volts should be used. Such capacitors are available at most electronic supply stores.

To remove the old capacitor, it will be necessary to remove the main circuit board. It is held in place by four screws located near the corners of the circuit board. See Figure 1. The board is held in place with electrical isolating washers and star lockwashers. Care must be taken to note the location of these parts while the board is being removed, so that they are replaced correctly.

Once the circuit board has been removed, the capacitor can be desoldered and removed.

NOTE: A soldering pencil of no larger than 35 watts should used when soldering electronic components. Higher power soldering irons may overheat the components causing failure.

Excess solder will often be left in the mounting holes when the old capacitor is removed. This may make installation of the new capacitor difficult. The excess solder may be removed with a desoldering tool or "solder sucker". This is a tool which sucks melted solder from the soldered joints. This tool is available at most electronic supply stores.

Once the old capacitor has been removed, the new one may be installed. The original capacitor was a non-polarized type while the new one is polarized and must be installed correctly.

NOTE: The new capacitor must be installed with the correct polarity to prevent failure of the SSOL.

The correct polarization of the capacitor is with the positive (+) end toward the terminal strip.

Insert the new capacitor into the circuit board and solder in place. Be careful not to use too much solder. Excess solder can cause a short circuit on the circuit board. Clip the excess wire off the capacitor leads. Bolt the circuit board back into the black box. Be careful to reinstall all spacers and insulators in the correct position. Carefully reinstall the SSOL in the starter making sure it is wired correctly.

NOTE: The F1-F2 terminals of the unmodified SSOL are <u>not</u> 115 VAC power inputs. XX1-X2 are the 115 VAC power inputs. The control voltage wiring in the starter, which is used to power the SSOL, may be labeled F1 and F2. These wires do not go to F1 and F2 in the SSOL, they go to XX1 and X2. The F1 and F2 terminals of the SSOL should be wired to the "Motor Overload" fault trip indicator. Follow the unit wiring diagram when reinstalling the module.

PARTS ORDERING INFORMATION:

All parts should be purchased locally.

NEW PRODUCTION:

CenTraVac starters (direct ship and unit mounted) shipped after July 1982, are equipped with the modified SSOL which eliminates the nuisance tripout.

TRANE

General Service Bulletin

CTV-SB-74

Library	Service Literature
Product Section	Refrigeration
Product	Centrifugal Liquid Chillers
Model	CTV
Literature Type	General Service Bulletin
Sequence	74
Date	10/25/85
File No.	SV-RF-CTV-CTV-SB-74-1085
Supersedes	

SUBJECT: INSTALLATION OF THE DISTRIBUTION FAULT AUTOMATIC RESET OPTION USED ON CENTRIFUGAL UNITS

INTRODUCTION:

This service bulletin provides instructions for installing a distribution fault automatic reset option on centrifugal units that use the Cutler Hammer solid state overload. This option is designed to automatically restart the unit after line power has been restored following a power loss.

Also discussed is a possible nuisance condition with the timing relationship between the Model CVHE oil pump, the anti-recycle timer, and the distribution fault timing.

DISCUSSION:

This section explains the function of the standard distribution fault option and the need for automatic reset.

A distribution fault is defined as a loss of three-phase line voltage due to a distribution system failure. When a power failure occurs during unit operation, the solid state overload senses the immediate drop in line current while the starter remains energized. The overload responds by tripping the distribution fault breaker to stop unit operation. The breaker must be manually reset to restart the unit. Since some buildings require continuous cooling, it is not practical to manually reset the breaker every time the power is interrupted. To eliminate the manual reset, an automatic reset module can be installed to restart the unit within two minutes after the main supply power is restored.

Since The Trane Company has a policy of continuous product improvement, it reserves the right to change specifications and design without notice. The installation and servicing of the equipment referred to in this booklet should be done by qualified, experienced technicians.

Manual Reset Operation

As soon as line voltage is lost, a trigger voltage generated by the solid state overload (A1) is applied to Terminal 8 of the reset control. This 28 VDC signal causes the normally closed TR contacts (Terminals 4 to 5 and 6 to 7 of K30) to open. When these contacts open, the unit shuts down. Two minutes after the trigger voltage has disappeared and line voltage has been restored, the TR contacts will reclose, allowing restart of the unit, provided the 30-minute anti-recycle timer has timed out.

Simultaneously with the generation of the trigger signal, the CR contacts will close, applying power to Terminal 3 which activates a pilot light. This CR is a latching relay which means that the pilot light will remain energized as long as the 115 volt supply power is on. Closure of the push button contacts will reset this CR circuit and extinguish the pilot light. The push button may have to remain depressed for two or three seconds to allow the capacitor in the latching circuit to completely discharge. See Figure 1.

Figure 1
Automatic Reset Control
Wiring Connections

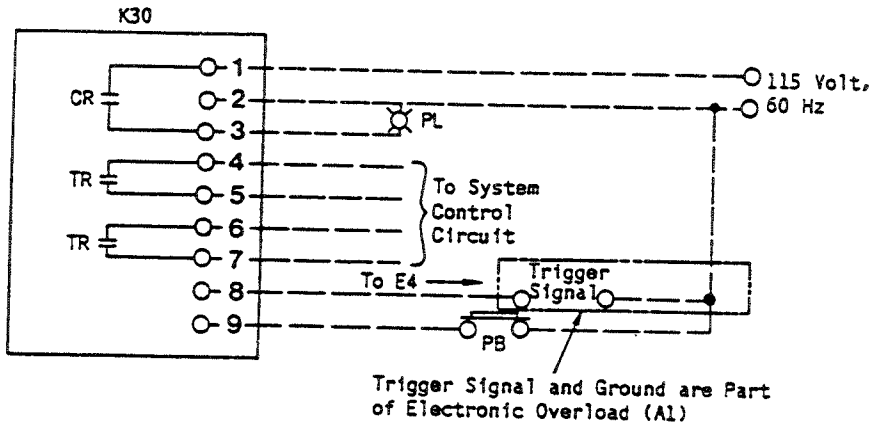

AUTOMATIC RESET INSTALLATION:

To install the automatic reset option, use the following procedure:

CVHE Control System

1. Remove the jumper from Terminals 9 and 10 of the unit control panel.

2. Connect the leads from Terminals 6 and 7 of the automatic reset control (K30) to Terminals 9 and 10. See Figure 2.

3. Disconnect wires 121, 122, 132 and 133 from the distribution fault circuit breaker (CB15) which is mounted on the starter panel door.

4. Remove CB15 from the starter panel door.

The Trane Company
La Crosse, Wisconsin 54601-7599
Printed in U.S.A.

©American Standard Inc. 1985

Figure 2
Typical Starter
Schematic Diagram

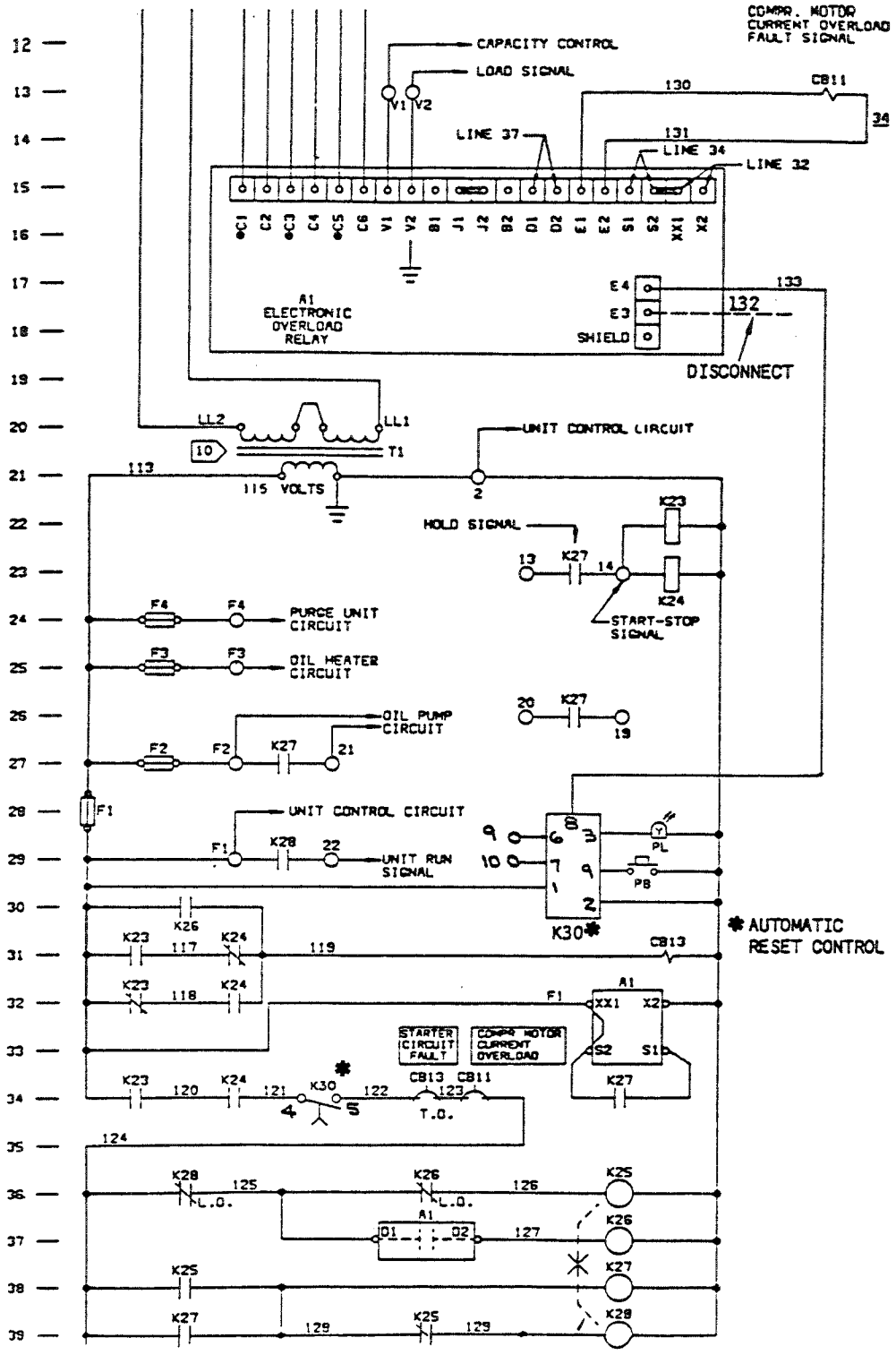

5. Mount the automatic reset control (K30) in an easily accessible location inside of the starter panel.

   To install the automatic reset control, two 3/16-inch diameter holes must be drilled as shown in Figure 3. Mount the control using two #8-32 screws with washers and nuts.

6. The push button pilot light assembly (PB/PL) should be mounted in the location that was occupied by CB15. A hole must be cut in the panel as shown in Figure 4. A ring is provided for mounting the assembly to the starter panel door.

   Figure 5 illustrates the push button pilot light assembly and Figure 6 shows the wiring connections for the assembly.

7. Wire the automatic reset control according to the schematic diagrams shown in Figures 2 and 7. Wires 121 and 133 that were removed from CB15 can be reused. Connect wire 121 to K30 (Terminal 4), wire 122 to K30 (Terminal 5) and wire 133 to K30 (Terminal 8). Additional 16 gauge wire may be required. Remove or insulate wire 132.

Figure 3
Automatic Reset Control
Mounting Detail

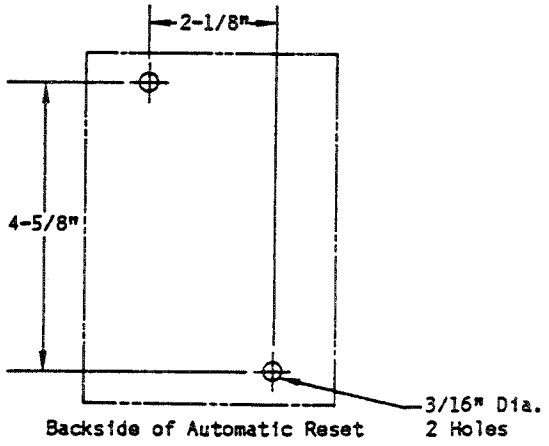

Figure 4
Hole for Mounting Push Button
Pilot Light Assembly

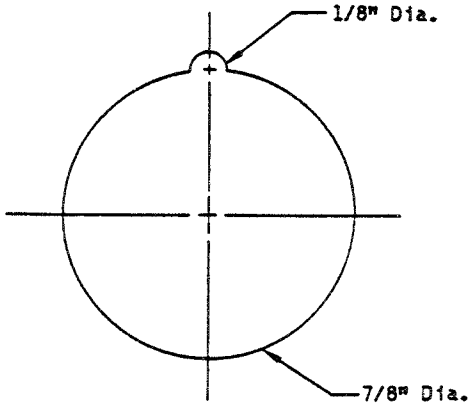

Figure 5
Push Button Pilot
Light Assembly

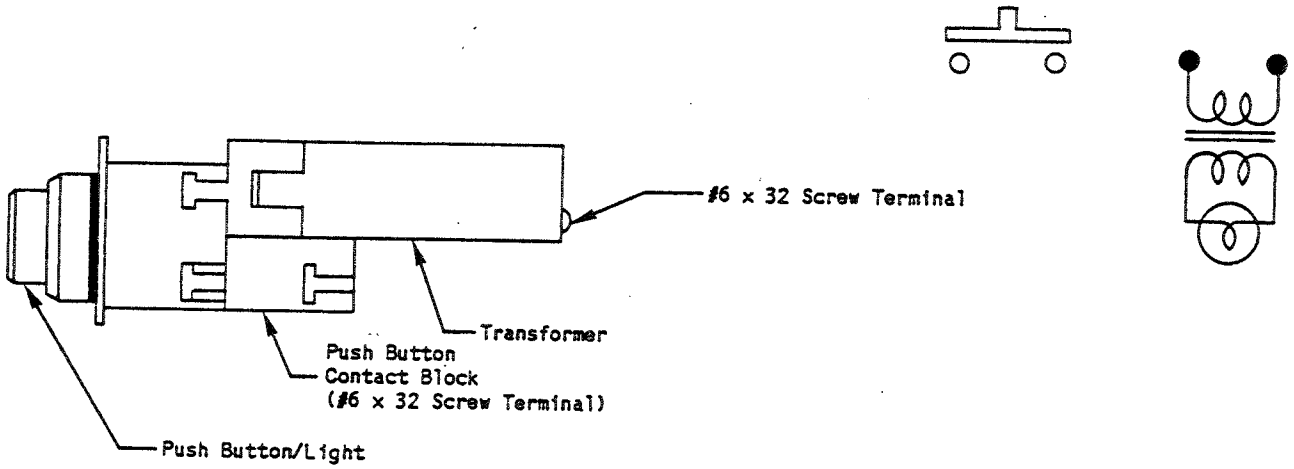

Figure 6
Wiring for Push Button
Pilot Light Assembly

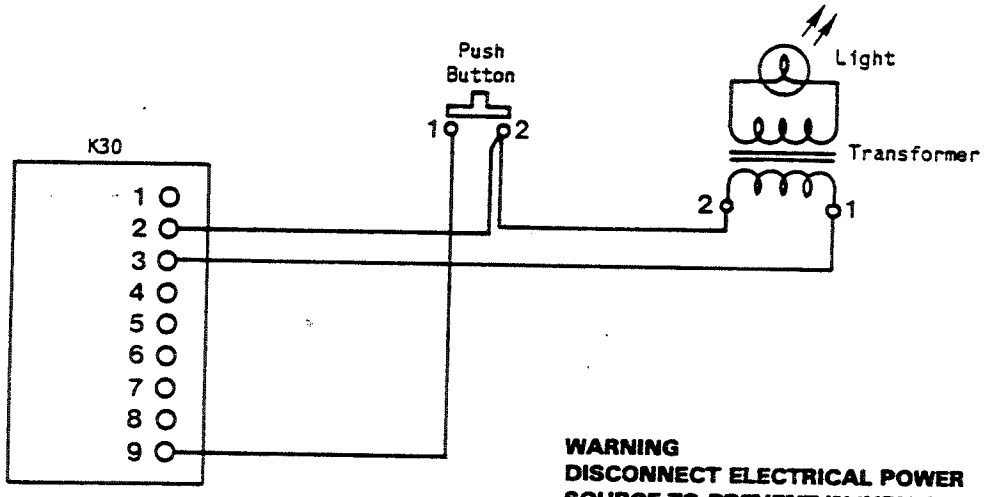

WARNING
DISCONNECT ELECTRICAL POWER SOURCE TO PREVENT INJURY OR DEATH FROM ELECTRICAL SHOCK

CAUTION
Use copper conductors only to prevent equipment damage

Figure 7
Automatic Reset Control
Schematic Diagram

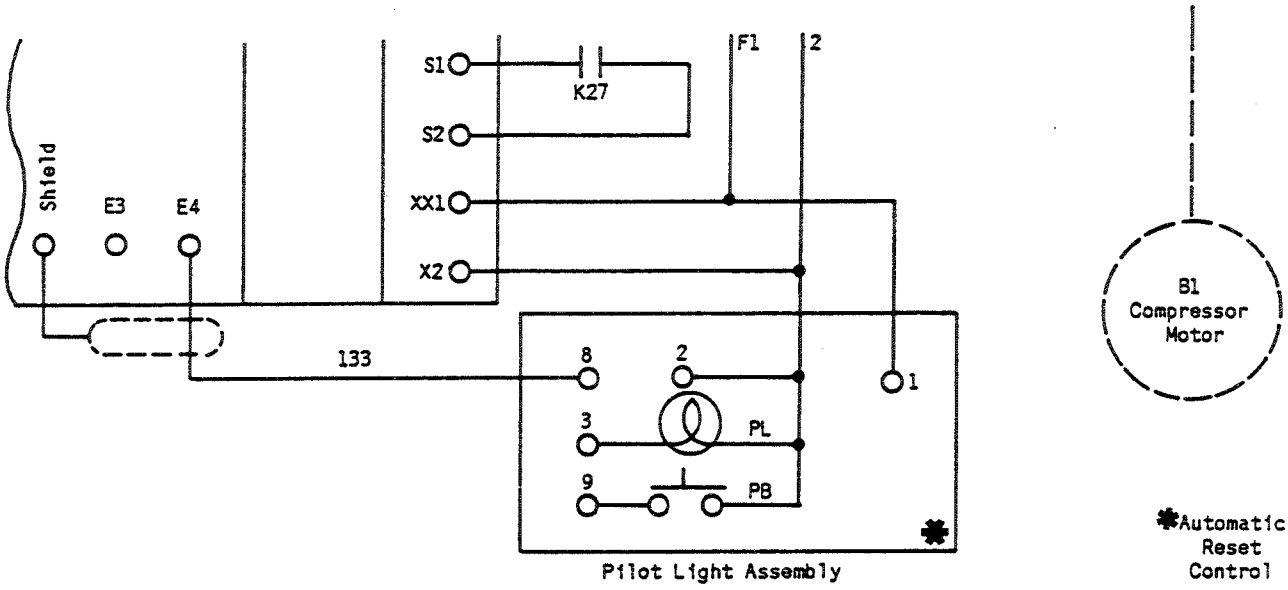

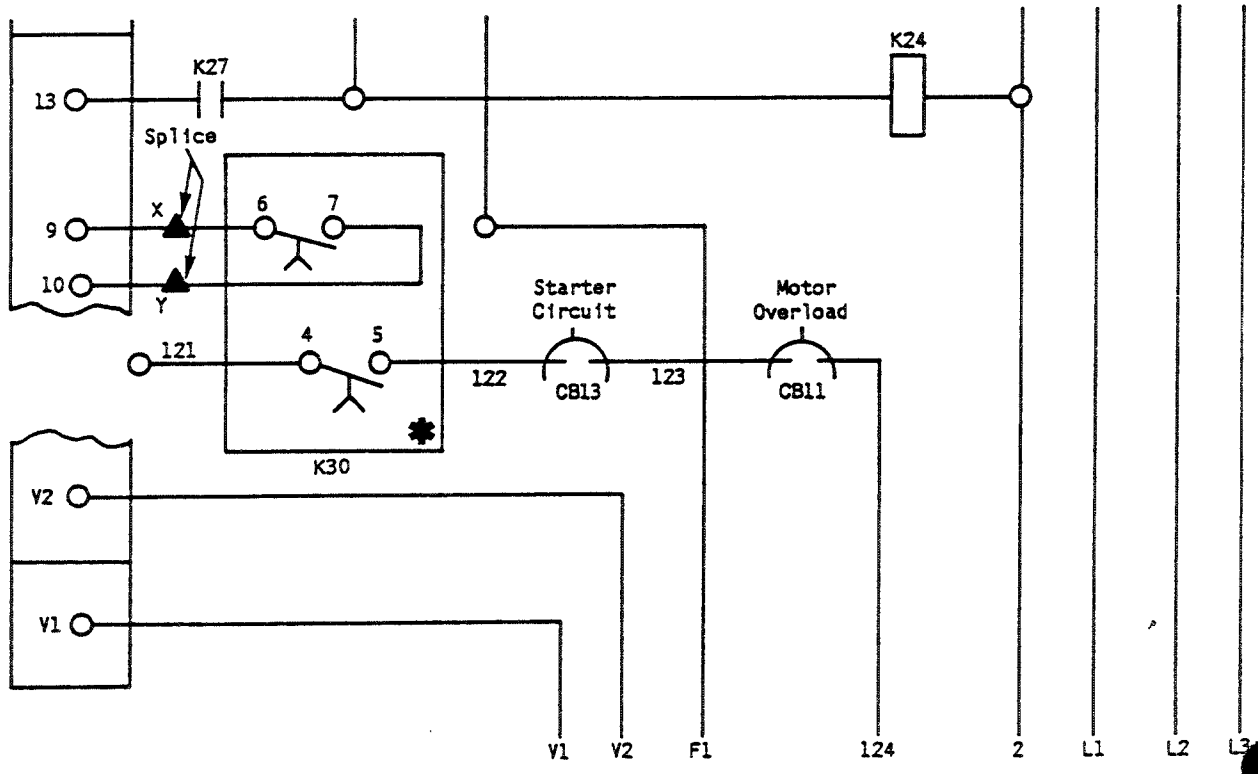

WARNING
DISCONNECT ELECTRICAL POWER SOURCE TO PREVENT INJURY OR DEATH FROM ELECTRICAL SHOCK

CAUTION
Use copper conductors only to prevent equipment damage

"A" and "B" Design Motor/Starter Protection System (MSPS)

1. Mount the automatic reset control (K30) in the upper right-hand corner of the MSPS. The mounting holes are pre-drilled on the "B" design MSPS.

2. Remove the knockout in the MSPS panel door and install the pilot light and push button switch. When the installation is complete, this light will indicate that automatic reset has occurred.

3. Run the two wires from the pilot light to terminals 2 and 3 of the automatic reset control.

4. Run one wire from the push button to the ground side of the pilot light. Run a second wire from the push button to terminal 9 on the automatic reset control.

5. Remove the jumper between terminals 2 and 2A on the MSPS. Run wires from terminals 2 and 2A to terminals 6 and 7 respectively on K30.

6. Disconnect the shielded wires E3 and E4 from the distribution fault circuit breaker (CB14). Reconnect wire E4 to terminal 8 of the automatic reset control (K30). Wire E3 is not needed, so it should be well insulated and tucked out of the way.

7. Run a 120 volt wire from terminal XX1 of the MSPS to terminal 1 of the automatic reset control.

8. Connect terminal 2 of the automatic reset control to terminal X2 of the MSPS.

Terminals 4 and 5 of the automatic reset control are not used. Refer to Figure 1 for wiring details.

Nuisance Tripping of the Low Oil Pressure Fault Indicator

Nuisance tripping of the low oil pressure fault indicator can occur due to improper timing between the automatic reset control, the anti-recycle timer and the oil pump timer of Model CVHE units. This condition can occur when unit attempts to restart after a distribution fault has occurred. The automatic restart control allows for a two minute delay after power has been restored, during which time the oil pump timer is in the post-lube timing cycle. If the anti-recycle timer has timed out, it will begin its normal timing cycle after the two minute lockout cycle of the automatic reset control. In some cases, the post-lube timing cycle of the oil pump timer is completed before the anti-recycle timer can initiate a restart. As the oil pump timer recycles, it interrupts the low oil fault indicator.

To insure that the automatic reset control does not interfere with the timing of the oil pump, the timing of the automatic reset control should be changed from two minutes to thirty seconds, which allows the start signal to be received before the oil pump timer has timed out.

To change the timing of the automatic reset control (Figure 8) to thirty seconds, remove the four cover screws and lift out the panel. The control components are located on the back side of the panel. Remove the resistor shown in Figure 9 and replace it with a 1/2-watt, 120K ohm resistor.

Figure 8
Automatic Reset Control

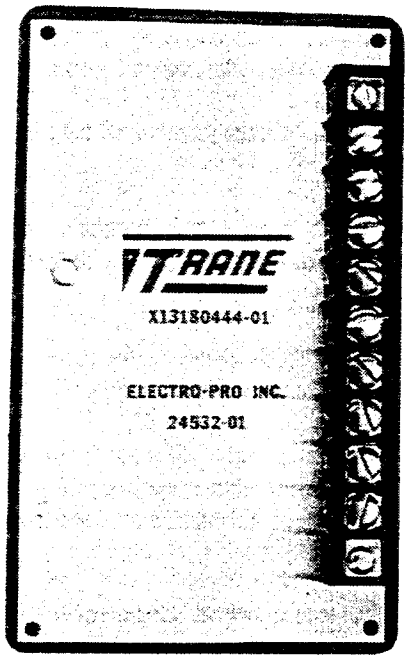

Figure 9
Automatic Reset Control
Replacement Resistor Location

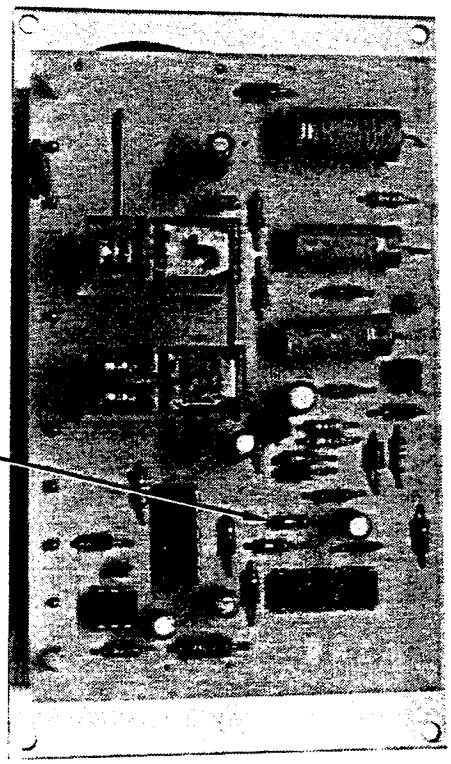

TRANE

General Service Bulletin

CTV-SB-75B

Library	Service Literature
Product Section	Refrigeration
Product	Centrifugal Liquid Chillers
Model	CTV
Literature Type	General Service Bulletin
Sequence	75B
Date	1/16/87
File No.	SV-RF-CTV-CTV-SB-75B-187
Supersedes	CTV-SB-75A (6/86)

Literature Changes:

Added clarification that this bulletin only applies to "Version 1" and "Version 2" of the Cutler-Hammer SSOL.

Subject: CUTLER-HAMMER SOLID-STATE OVERLOAD (SSOL) UPGRADE

Introduction:

This service bulletin outlines several recommended changes and additions to "Version 1" and "Version 2" of the Cutler-Hammer solid-state overload ("SSOL"; Trane part no. RLY-765). Built from 1981 through December 1986, the affected SSOLs were used in CVHE, CVHB, CVAC and MSPS retrofit kit applications.

Note: By March 1st, 1987, 4 different versions of the Cutler-Hammer SSOL (electrically designated as "A1") will be available in the field. However, **only "Version 1" and "Version 2" are affected by the upgrade described in this bulletin since these improvements are completed by the factory on "Version 3" and "Version 4" of the SSOL!** To distinguish one version of the SSOL from another, look for the following identifying characteristics:

a. "Version 1". The original—and most familiar—version of the Cutler-Hammer SSOL was introduced in 1981 and manufactured until September 1986.

b. "Version 2". Built from September 1986 through December 1986, this variation of the SSOL is most readily identified by the "REV A" that appears on the front cover of the module. It can also be distinguished from Version 1 by comparing the p.c. board assemblies: Version 2 does not include the 50/60-Hz frequency adjustment switch, and all of the IC chips are soldered into place.

c. "Version 3". Identified by a "REV B" on the module's front cover, this SSOL variation is scheduled for production from January 1987 until March 1987, and includes these modifications: removal of the locked rotor potentiometer; a different transformer; removal of the J1-J2 jumper; and factory installation of the "new style" transition relay, MOV, capacitor and surge suppressor described in this bulletin.

d. "Version 4." Scheduled for initial production in March 1987, Version 4 of the SSOL will be known as the "AG-5". In addition to all of the modifications described for Version 3, the AG-5 includes a redesigned p.c. board. You will also notice that the terminal strip and acceleration time DIP switches are relocated to the outside of the SSOL module.

Since The Trane Company has a policy of continuous product improvement, it reserves the right to change specifications and design without notice. The installation and servicing of the equipment referred to in this booklet should be done by qualified, experienced technicians.

Discussion:

Testing and evaluation of "Versions 1 and 2" of the Cutler-Hammer solid-state overload module revealed areas where improvements can be made to increase reliability. The following sections discuss each of these areas in detail.

1. Intermittent Transition

The plug-in style transition relay originally provided in the overload module was an American Zettler Model AZ420-70-4HUS, while an AMF Potter-Brumfield Model R10-E1-X2 replacement relay was used for La Crosse service stock. Both of these relays have contacts made from a cadmium-oxide/silver-type material.

Cycle testing has shown that intermittent closures occasionally occur as a result of cadmium build-up between the surfaces of the relay contacts. A material specification change was made that requires the use of all-silver contacts in the transition relay.

2. Nuisance Tripping Due to Current Imbalance

The SSOL module senses the 3 current phases of the motor and converts them to a proportional DC voltage output at Terminals V1-V2. The resulting VDC signal is then used by the capacity control module to current-limit the chiller. When a significant amount of current imbalance exists in the system, the Cutler-Hammer SSOL may trip on the highest of the 3 current legs while the capacity control module is trying to current-limit based on the average. This type of nuisance trip only occurs when the unit's running load current is near 100%.

Installation of a capacitor wired in parallel with the current calibrator (Terminals B1-B2) in the SSOL will eliminate these nuisance trips.

3. Electrical Component Failures Due to Voltage Transients

High voltage spikes in the 120 VAC control circuit can cause SSOL module failure. This particular problem was discussed in Service Bulletin CVHE-SB-12A, which recommended field installation of a surge suppression device (metal oxide varistor, or "MOV") in the control circuit to protect the 120 VAC input portion of the overload module.

Further inspection of failed overload modules also verified that voltage transients can be introduced into the low voltage circuit (V1-V2) and cause the failure of operational amplifier Z1. This type of failure is usually the result of improper wiring in the V1-V2 circuit between the SSOL in the starter panel and the capacity control module in the chiller control panel. Remember that interconnecting wiring for V1-V2 must be 18 AWG, shielded wire. When properly installed, the shielding is only grounded at the starter panel.

Caution: Voltage from external sources may be induced into the V1-V2 circuit and damage the SSOL module if the wiring is improperly grounded.

Transient voltage suppression can be obtained with the addition of a bipolar surge suppressor---or "TRANS ZORB"---across the SSOL's V1-V2 terminals. The addition of this device is not only recommended for all installations without proper shielding, but can also be added to any installation with shielded wire for increased voltage-transient protection.

Note: Shielded cable was not used in some Trane-built, unit-mounted starters manufactured between January 1985 and January 1986. Be sure to review all succeeding installations of Model CVHE and CVHB units with free-standing starters to verify that the V1-V2 wiring conforms to the specifications outlined in this bulletin.

4. Electrostatic Discharge (ESD)

Because of the "metal oxide semiconductor" (MOS) component technology used in the construction of the SSOL module, the electronic components on the p.c. board are susceptible to damage caused by electrostatic---or "static" ---discharge. Static discharges are most often transmitted by a person touching the SSOL's electronic components or the p.c. board itself.

To prevent electrostatic discharges, always wear static control wrist straps (i.e., 3M Model 2071 wrist straps, or equivalent) whenever working inside the overload module.

Corrective Action:

When service is required on a unit with "Version 1" or "Version 2" of a Cutler-Hammer SSOL, be sure to complete the modifications described below.

1. Intermittent Transition. Install a new transition relay (RLY-849) in place of the existing relay.

After February 1st, 1986, all relays ordered from La Crosse service stock are the new style. The model number of the new-style transition relay is R10-E1-Y2 (Potter-Brumfield). ("Y2" indicates that the relay contact material is all silver, rather than cadmium-oxide/silver.) Be sure to check your office stock of RLY-849 to ensure that all relays are the new style.

2. Nuisance Tripping Due to Current Imbalance. Install an electrolytic capacitor (22 to 26 MFD, rated for 25 to 100 VDC) across SSOL Terminals B1-B2; Trane part no. CPT-335 is recommended for this application.

Wire this capacitor in parallel with the existing current calibrator in the SSOL module. Since CPT-335 is nonpolarized, it can be installed without regard to the polarity of Terminals B1-B2. However, if a locally-supplied capacitor is used, be sure to install it so that the positive (+) side is on Terminal B1 and the negative (-) side is on Terminal B2.

3. Electrical Component Failures Due to Voltage Transients. Install a metal oxide varistor---Trane part no. SPS-11---in the unit control panel if one is not already there; refer to Service Bulletin CVHE-SB-12A for installation details.

Then, wire a "TRANS ZORB"---Trane part no. SPS-14---between SSOL Terminals V1-V2 to protect the Z1 output operational amplifier in the low voltage circuit.

4. Electrostatic Discharge. Whenever the cover of the SSOL module is removed for service, static discharge must be avoided! Wear static-control wrist straps to eliminate any possibility of electrostatic discharge.

For further information on this product or other Trane products, refer to the "Trane Service Literature Catalog", ordering number IDX-IOM-1. This catalog contains listings and prices for all service literature sold by Trane. The catalog may be ordered by sending a $20.00 check to: The Trane Company, Service Literature Sales, 3600 Pammel Creek Road, La Crosse, WI 54601.

PRINTED BY PRODUCTION SERVICES — LA CROSSE

BB/LW

TRANE™

General Service Bulletin

CTV-SB-76

Library	Service Literature
Product Section	Refrigeration
Product	Centrifugal Liquid Chillers
Model	CTV
Literature Type	General Service Bulletin
Sequence	76
Date	10/14/86
File No.	SV-RF-CTV-CTV-SB-76-1086
Supersedes	

SUBJECT: NUISANCE "DISTRIBUTION FAULT" TRIPS FOLLOWING UNIT SHUTDOWN

INTRODUCTION:

Centrifugal units equipped with Cutler-Hammer solid-state overloads (SSOLs) may experience nuisance "distribution fault" trips when the starter de-energizes during the normal shutdown sequence. This service bulletin explains why these nuisance trips occur, and what can be done to prevent them.

DISCUSSION:

To better understand why nuisance "distribution fault" trips occur, let's first review what a distribution fault is. "Distribution fault" is defined as the total loss of line voltage for a period lasting less than 60 electrical cycles. In this situation, the compressor motor remains on-line and acts as a generator; often, the motor is capable of generating enough voltage to allow the control circuit to remain energized for up to 1 second (i.e., 60 electrical cycles).

By contrast, during a normal shutdown (i.e., when the ON/OFF switch is adjusted to the OFF position), the compressor motor is instantly disconnected from the line. This simultaneously de-energizes the control circuit, dropping out all of its relays and contactors--and effectively eliminating the likelihood of a distribution fault trip.

When a unit is protected by the Cutler-Hammer SSOL motor/starter protection system, existence of a distribution fault condition is detected within 1-1/2 electrical cycles; within 6 electrical cycles, the motor is off-line. SSOL recognition of a distribution fault is based on the status of the S1-S2 circuit (auxiliary on 1M) and motor amp draw: If the S1-S2 circuit remains closed while line current is less than 15% of RLA, a distribution fault exists.

In star-delta starter applications, this situation can occur if the 2M (K28) contactor opens, interrupting current to the motor, while a sluggish 1M (K27) contactor--or unresponsive auxiliary 1M contacts in the S1-S2 circuit--remains closed. As a result, the SSOL interprets what should be a normal, scheduled shutdown (i.e., one initiated with the unit ON/OFF switch) as a distribution fault, and trips the distribution fault indicator.

Since The Trane Company has a policy of continuous product improvement, it reserves the right to change specifications and design without notice. The installation and servicing of the equipment referred to in this booklet should be done by qualified, experienced technicians.

CORRECTIVE ACTION:

Starter vendors interface their auxiliary contacts with the main contactor in a variety of ways. Depending on the method used, some auxiliary contacts can be adjusted to improve their responsiveness, while others are more easily changed out. In all situations where nuisance distribution fault trips are a problem, however, be sure to determine whether the presence of debris or corrosion is responsible for the sluggish reaction of the 1M (K27) contactor (or auxiliary contacts).

In the event that the 1M (K27) contactor is found to be in good condition--and neither adjustment nor replacement of the auxiliary contactor contacts eliminates the nuisance trip problem, wire a single-pole, single-throw relay into the distribution fault circuit. The addition of this relay ensures that the S1-S2 circuit opens as soon as the coil of the 1M (K27) contactor is de-energized (even though the auxiliary 1M contacts may still respond slowly).

Examples A and B illustrate two alternative methods for adding the SPST relay to the distribution fault circuit.

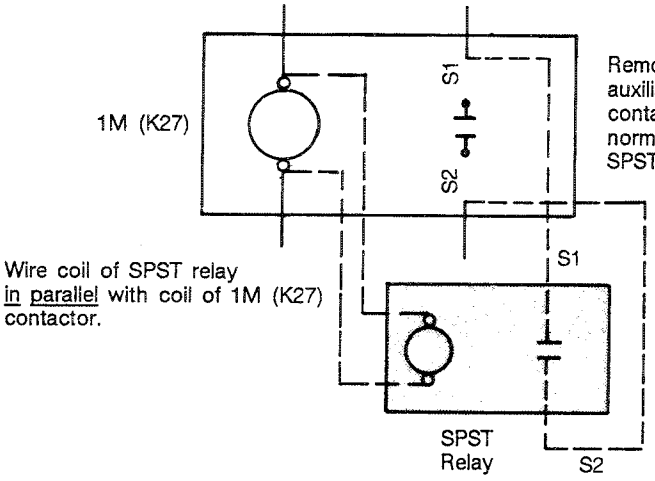

Example A

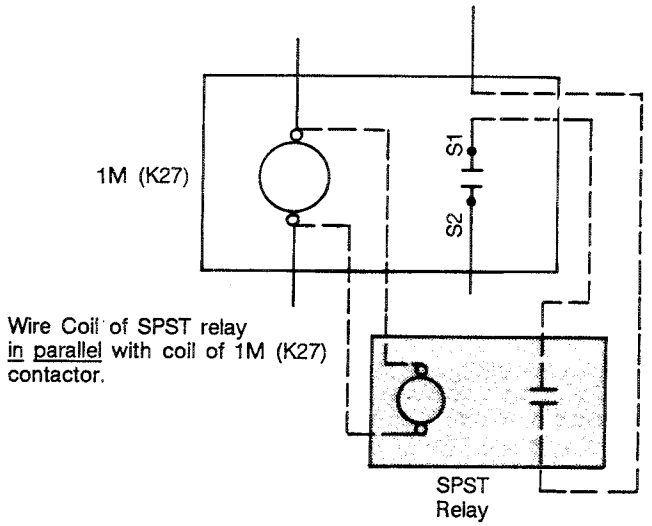

Example B

The Trane Company
La Crosse, Wisconsin 54601-7599
Printed in U.S.A.

©American Standard Inc. 1986

PRINTED BY PRODUCTION SERVICES — LA CROSSE

BB/LW

TRANE™

General Service Bulletin

CTV-SB-77

Library	**Service Literature**
Product Section	**Refrigeration**
Product	**Centrifugal Liquid Chillers**
Model	**CTV**
Literature Type	**General Service Bulletin**
Sequence	**77**
Date	**2/6/87**
File No.	**SV-RF-CTV-CTV-SB-77-287**
Supersedes	

Subject: CUTLER-HAMMER SOLID-STATE OVERLOAD (SSOL; "A1") OPERATION, CALIBRATION AND TROUBLESHOOTING

Introduction:

This service bulletin describes the operation of the Cutler-Hammer solid-state overload module (electrically designated as "A1"), as well as appropriate procedures for SSOL calibration and trouble analysis. This module is provided in all current-production starter panels built to Trane specifications for CVHE and CVHB CenTraVacs (excluding those designed for use with the microcomputer-based UCP695 chiller control system).

It is important to note that by March 1st, 1987 4 different versions of the Cutler-Hammer solid-state overload (electrically designated as "A1") will be available in the field. Identifying characteristics that will enable you to distinguish one version from another are described below.

[ ] **"Version 1".** The original---and most familiar---version of the Cutler-Hammer SSOL was introduced in 1981 and manufactured until September 1986.

[ ] **"Version 2."** Built from September 1986 through December 1986, this variation of the SSOL is most readily identified by the "REV A" that appears on the front cover of the module. It can also be distinguished from Version 1 by comparing the printed circuit (p.c.) board assemblies: Version 2 does not include the 50/60-Hertz frequency adjustment switch, and all of the IC chips are soldered into place.

[ ] **"Version 3."** Identified by a "REV B" on the module's front cover, this SSOL variation is scheduled for production from January 1987 until March 1987, and includes these factory modifications:

a. removal of the locked rotor potentiometer;
b. a different transformer;
c. removal of the J1-J2 jumper;
d. a transition relay (RLY-849) with all-silver contacts; and,
e. factory-installation a metal oxide varistor (SPS-11), an electrolytic capacitor (CPT-335), and a TRANS ZORB surge suppressor (SPS-14). (Because these components are now installed at the factory, service bulletin CTV-SB-75---which describes field installation of these components---is not applicable.)

[ ] **"Version 4."** Scheduled for initial production in March 1987, Version 4 of the SSOL will be known as the "AG-5". In addition to all of the modifications described for Version 3, the AG-5 also includes these changes:

a. a redesigned p.c. board; and,
b. relocation of the terminal strip and acceleration time DIP switch to the outside of the SSOL module.

Since The Trane Company has a policy of continuous product improvement, it reserves the right to change specifications and design without notice. The installation and servicing of the equipment referred to in this booklet should be done by qualified, experienced technicians.

Discussion:

Following is a list of the SSOL's operational functions and features:

1. provides precise compressor motor overload protection;
2. protects against excessive locked rotor (inrush) current draw;
3. limits the length of time that inrush current is drawn;
4. protects the chiller from damage that could be caused by an electrical distribution fault;
5. initiates starter transition when compressor motor current drops to 85% of RLA;
6. provides a DC voltage signal that is proportional to the load;
7. can be adjusted to compensate for high line voltage; and,
8. can be adjusted for either 50- or 60-Hertz operation.

SSOL Calibration Procedure

WARNING: To prevent injury or death due to electrical shock, lock unit disconnect switch open before servicing SSOL module (A1).

The adjustments and calibration procedures itemized below---and detailed on the following pages of this bulletin---must be completed before the chiller is started. Remember to use a grounding strap whenever working on a SSOL module!

1. Adjust line frequency (SSOL Version 1 only).
2. Calibrate the motor overload resistor.
3. Adjust locked rotor current (SSOL Versions 1 and 2 only).
4. Set the maximum motor acceleration time.
5. Adjust for high-voltage compensation.

If the unit is equipped with the distribution fault function, the small circuit board mounted in the center of the SSOL must be tilted outward to calibrate the module. To move this circuit board out of the way, gently pull on the 2 black tabs located at the top of the board, and tilt it down on its hinges.

Note: To verify that the existing---or new---SSOL is operational, use Trane service tool TOL-90 to perform a functional checkout of the module. TOL-90 is available from Trane ServiceFirst, and is provided with operating instructions (TOL-OM-1). If you are using TOL-90 to test the module's integrity while it is still mounted in the starter panel:

a. remove the high voltage power supply from the starter panel;
b. connect a separate 115 VAC source to power up the SSOL; and,
c. disconnect the fuses on the primary side of the transformer.

Line Frequency Adjustment (SSOL Version 1 Only)

"Version 1" of the Cutler-Hammer SSOL module can be adapted to operate in either 50- or 60-Hertz electrical systems. To select the appropriate line frequency for a specific application:

1. Determine the line frequency of the installation. (Remember that all U.S. installations are 60 Hz.)

2. Position the SSOL's frequency adjustment switch at the appropriate setting. Refer to Figure 1 for the location of this switch on the SSOL's p.c. board; Figure 2 indicates the appropriate switch position for both 50 Hz and 60 Hz settings.

3. Check the appropriate box on the SSOL's nameplate (Figure 3) to record the line frequency switch setting selected in Step 2.

Note: Versions 2, 3 and 4 of the SSOL can also be used in 50-cycle applications. Though a specific line frequency adjustment is not necessary for any of these SSOL versions, the maximum acceleration time setting must be readjusted by multiplying the 60 Hz maximum acceleration time setting by "5/6". (For instance, if the maximum acceleration time setting is 30 seconds for a 60 Hz application, the corresponding 50 Hz setting is "30 x 5/6", or 25 seconds.)

The Trane Company
La Crosse, Wisconsin 54601-7599
Printed in U.S.A.

©American Standard Inc. 1987

Figure 1
Solid-State Overload Module (SSOL)

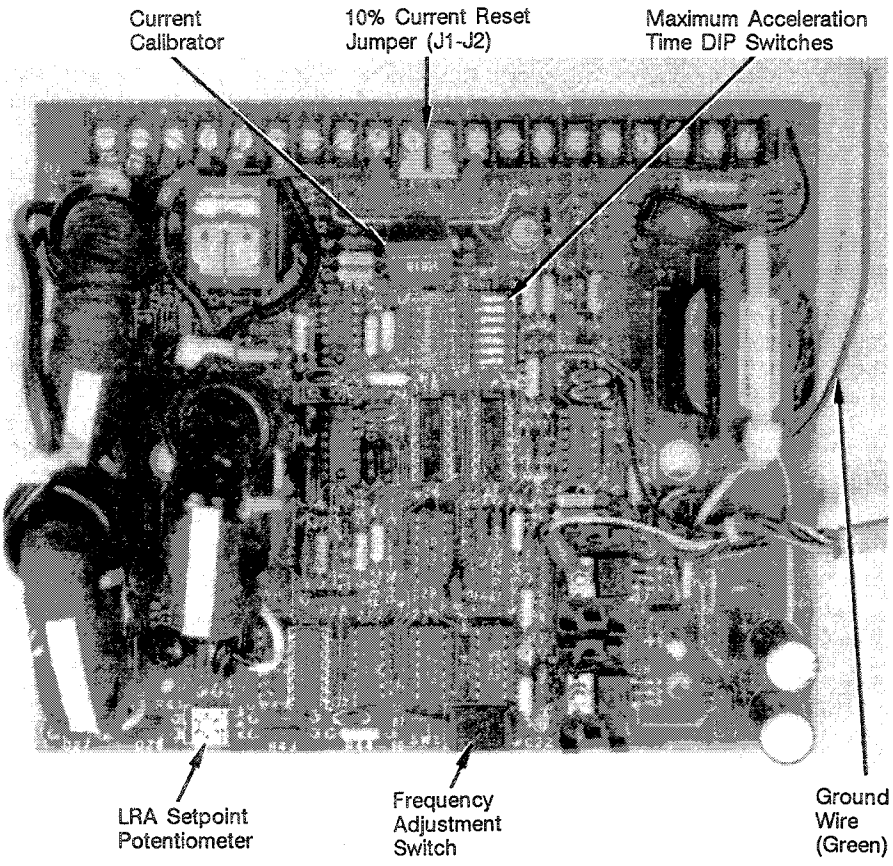

Figure 2
Line Frequency Adjustment Switch Positions



50-Hertz Setting

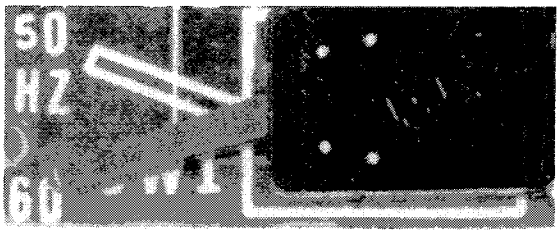

60-Hertz Setting

Figure 3
SSOL Nameplate

TRANE NO.	
CALIBRATOR NO.	
CALIBRATOR OHMS	C.T. RATIO /5
MOTOR LRA _____ RATIO ____ % MOTOR RLA _____	
L.R. TRIP TIME SEC.	50☐ 60☐ HZ

Compressor Motor Overload Setup (SSOL Verions 1, 2, 3 and 4)

Compressor motor overload calibration is accomplished by adjusting the resistance of the current calibrator (shown in Figure 1). When the current calibrator is adjusted properly, the SSOL will trip at 107% of the compressor motor's RLA value. (This particular "trip" point prevents nuisance full-load lockouts, while still protecting the compressor motor from potentially damaging overloads.)

Follow the instructions outlined below to correctly set the SSOL's current calibrator:

1. Determine the chiller's RLA value and current transformer ratio; be sure to consider the conditions described below when arriving at these values:

a. If the job site voltage is equal to---or lower than---the specified voltage rating stamped on the chiller nameplate, base the current calibrator setting on the nameplate RLA value. However, if the actual voltage is higher than the specified voltage, refer to the instructions provided under "High Voltage Compensation" later in this bulletin.

b. If the chiller is equipped with power factor correction capacitors (PFCCs) that are connected to the load side of the overload current transformers, the RLA value shown on the unit nameplate must be recalculated in order to correctly set the current calibrator.

This "adjusted" RLA value is already calculated for those units with factory-installed PFCCs, and it is marked on the cover of the solid-state overload (SSOL).

To determine the "adjusted" RLA value for other units, run the unit at full load; then take amperage readings on the load and line sides of the capacitor terminal points. Multiply the line-to-load-side ratio of these amp readings by the nameplate RLA to arrive at an "adjusted" RLA value.

Example

100 amps = Motor Rating (RLA Value) from Nameplate
84 amps = Line-Side Current Reading
92 amps = Load-Side Current Reading

$$\text{Nameplate RLA} \times \frac{\text{Line-Side Current}}{\text{Load-Side Current}} = \text{"Adjusted" RLA}$$

$$100 \text{ amps} \times \frac{84 \text{ amps}}{92 \text{ amps}} = 91.3, \text{ or } 91 \text{ amps}$$

If the PFCCs are connected on the line side of the SSOL current transformers---or if the capacitor leads are run through the current transformers with the motor leads (Figure 4), do not recalculate compressor RLA; use the RLA value stamped on the chiller nameplate to establish the current calibrator setting.

Note: For additional information and recommendations regarding field additions of power factor correction capacitors, refer to Trane Engineering Bulletin EB-CTV-44. Remember, too, that the PFCCs must be installed on Leads T1, T2 and T3---not on Leads T4, T5 and T6!

Figure 4
Current Transformers

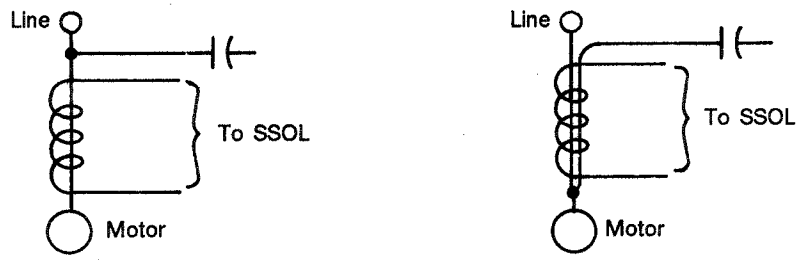

2. Once the appropriate RLA value is determined (Step 1), calculate the rated load secondary current ("Isec") using 1 of the two methods described below. Notice that the calculation method selected---and the resulting Isec value---are dependent on the location of the current transformers (CTs).

a. CTs Monitoring Line Current. If the CTs are located to monitor line current, determine the Isec value by dividing the appropriate RLA value by the CT ratio.

Example
RLA Value = 91 amps
CT Ratio = 100:5 (or 20)

$$\frac{\text{RLA}}{\text{CT Ratio}} = \text{Isec}$$

$$\frac{91 \text{ amps}}{20} = 4.55$$

b. CTs Monitoring Phase Current. If the CTs in a wye-delta starter are positioned to monitor phase current, the Isec value is calculated by dividing the appropriate RLA value by the CT ratio, and then multiplying the result by 0.58.

Example
RLA Value = 91 amps
CT Ratio = 100:5 (or 20)

$$\frac{\text{RLA}}{\text{CT Ratio}} \times 0.58 = \text{Isec}$$

$$\frac{91 \text{ amps}}{20} \times 0.58 = 2.639, \text{ or } 2.64$$

Note: Where donut-type CTs are used, the wires routed through them are sometimes wrapped around and passed through the CTs more than once; this alters the "actual" CT ratio. To determine the CT ratio in this situation, divide the CT ratio by the number of times that the wire passes through the CT; in other words, the "actual" ratio for a 200:5 CT with a wire passed through it twice is 100:5.

3. Using Table 1 and the rated load secondary current ("Isec") value calculated in Step 2, determine the appropriate current calibrator and its potentiometer setting.

For example, if the "Isec" value is 4.55, the correct current calibrator is H818 and the potentiometer should be adjusted to 82.6 ohms; this adjustment will result in an overload trip point that is 107% of the nameplate RLA.

4. To adjust the current calibrator to the setting determined in Step 3, remove it from the SSOL module. Use a digital ohmmeter with a minimum accuracy of 3-1/2 places to obtain the desired resistance setting.

5. Return the current calibrator to the SSOL module. Be sure to record the calibrator number and setting on the SSOL nameplate.

Locked Rotor Current Lockout Adjustment (SSOL Versions 1 and 2 Only)

The SSOL is designed to protect the compressor motor from excessive LRA current draw during start-up by tripping the motor overload circuit breaker any time the set LRA is exceeded. Remember that the LRA current trip point value depends on the type of starter used with the CenTraVac compressor motor. It is set with the "LRA Setpoint" potentiometer found near the lower right-hand corner of the SSOL p.c. board. (See Figure 1.)

To properly set the LRA setpoint potentiometer:

1. Insert a screwdriver in the potentiometer adjusting slot; then turn the pot to the fully-counterclockwise (CCW) stop to establish a reference point.

2. Refer to Figure 5; then rotate the pot clockwise (CW) to the position that corresponds to the type of compressor motor starter used.

Note: The LRA setpoint pot positions illustrated in Figure 5 represent approximate settings for various starter types. To calculate a specific potentiometer setting, see Step 5.

Figure 5
LRA Setpoint Potentiometer Settings for Various Starter Types

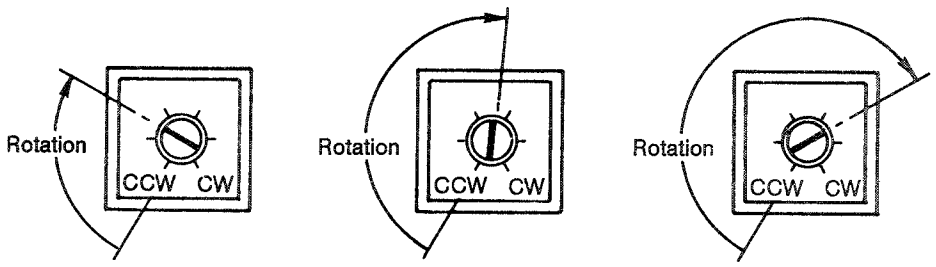

Table 1
Current Calibrator Settings

I.D. No. on Current Calibrator	Isec Ampere Rating		Current Calibrator "Pot" Setting (Resistance)	I.D. No. on Current Calibrator	Isec Ampere Rating		Current Calibrator "Pot" Setting (Resistance)
	Minimum	Maximum			Minimum	Maximum	
H816	2.01	2.05	185.0 ohms	H818	3.66	3.70	102.0 ohms
	2.06	2.10	180.0 ohms		3.71	3.75	101.0 ohms
	2.11	2.15	176.0 ohms		3.76	3.80	99.2 ohms
	2.16	2.20	172.0 ohms		3.81	3.85	97.9 ohms
	2.21	2.25	168.0 ohms		3.86	3.90	96.6 ohms
	2.26	2.30	165.0 ohms		3.91	3.95	95.4 ohms
	2.31	2.35	161.0 ohms		3.96	4.00	94.2 ohms
	2.36	2.40	158.0 ohms		4.01	4.05	93.0 ohms
	2.41	2.45	155.0 ohms		4.06	4.10	91.8 ohms
	2.46	2.50	151.0 ohms		4.11	4.15	90.7 ohms
H817	2.51	2.55	148.0 ohms		4.16	4.20	89.6 ohms
	2.56	2.60	146.0 ohms		4.21	4.25	88.5 ohms
	2.61	2.65	143.0 ohms		4.26	4.30	87.5 ohms
	2.66	2.70	140.0 ohms		4.31	4.35	86.5 ohms
	2.71	2.75	138.0 ohms		4.36	4.40	85.5 ohms
	2.76	2.80	135.0 ohms		4.41	4.45	84.5 ohms
	2.81	2.85	133.0 ohms		4.46	4.50	83.5 ohms
	2.86	2.90	130.0 ohms		4.51	4.55	82.6 ohms
	2.91	2.95	128.0 ohms		4.56	4.60	81.7 ohms
	2.96	3.00	126.0 ohms		4.61	4.65	80.8 ohms
	3.01	3.05	124.0 ohms		4.66	4.70	79.9 ohms
	3.06	3.10	122.0 ohms		4.71	4.75	79.1 ohms
	3.11	3.15	120.0 ohms		4.76	4.80	78.2 ohms
	3.16	3.20	118.0 ohms		4.81	4.85	77.4 ohms
	3.21	3.25	116.0 ohms		4.86	4.90	76.6 ohms
	3.26	3.30	114.0 ohms		4.91	4.95	75.8 ohms
	3.31	3.35	113.0 ohms		4.96	5.00	75.1 ohms
	3.36	3.40	111.0 ohms				
	3.41	3.45	109.0 ohms				
	3.46	3.50	108.0 ohms				
	3.51	3.55	106.0 ohms				
	3.56	3.60	105.0 ohms				
	3.61	3.65	103.0 ohms				

3. Initiate the chiller start sequence. If the motor overload circuit breaker trips as soon as (within 1 second) the starter energizes, the LRA current trip point may need to be set higher. (This will not harm the operation of the SSOL module or the compressor motor.)

4. Record the LRA and RLA values from the chiller nameplate on the SSOL's nameplate.

5. Use the following procedure to calculate the "RATIO _____%" value; then record this value on the SSOL nameplate.

$$\text{Ratio \%} = \frac{\text{Motor LRA*}}{\text{Motor RLA}} \times 100\% ,$$

*where LRA (locked rotor amperes) is the reduced value determined by starter type. See Table 2.

Example

Motor LRA = 200 amps
Motor RLA = 100 amps

$$\text{Ratio \%} = \frac{200 \text{ amps}}{100 \text{ amps}} \times 100\% = 200\%$$

Maximum Acceleration Time Setup (SSOL Versions 1, 2, 3 and 4)

Designed to limit the time allowed for transition to occur, the SSOL trips—and shuts down the unit—whenever the compressor motor fails to transition within the time period established with maximum acceleration time switches (Figure 1). This prevents the motor from drawing LRA for an excessive period of time which, in turn, prevents the motor from overheating.

To set the maximum acceleration time switches properly:

1. Determine the appropriate maximum acceleration time—between 1 and 63 seconds—for the unit; refer to Table 3 for typical settings by starter type.

Keep in mind that the type of unit and starter, as well as job site conditions, will determine how much the actual maximum acceleration time setting varies from the typical settings shown in Table 3.

2. Locate the maximum acceleration time DIP switches on the SSOL p.c. board; refer to Figures 1 and 6. Notice that each DIP switch represents a specific number of seconds (e.g., DIP switch no. 1 is 32 seconds, no. 2 is 16 seconds, etc.). Determine what DIP switch "seconds" values can be added to yield the maximum acceleration time found in Step 1; then flip these DIP switches to the ON position. (For instance, if the desired maximum acceleration time setting is 27 seconds, flip DIP switch nos. 2, 3, 5 and 6 to ON.)

Note: If none of the DIP switches is set at ON, the unit will not start. (The SSOL will not allow any time for motor acceleration in this situation, so the motor overload circuit breaker trips as soon as a start-up is attempted.)

3. Record the maximum acceleration time setting on the SSOL nameplate.

For 50 Hz Applications w/SSOL Versions 2, 3 or 4. When determining the appropriate maximum acceleration time, remember to compensate for the difference in line frequency. Multiply the appropriate 60 Hz maximum acceleration time by "5/6" to arrive at the proper setting for 50 Hz applications. (For instance, if the maximum acceleration time setting is 30 seconds for a 60 Hz application, the corresponding 50 Hz setting is "30 x 5/6", or 25 seconds.)

Table 2
Starting Characteristics of Various Types of Motor Starters

Starter Type	Starting Characteristics--- % of Rated Value			
	% Tap	Motor Voltage	Motor LRA	Motor Torque
Full-Voltage Type				
Magnetic, Across-the-Line	n/a	100%	100%	100%
Reduced Voltage Types				
Auto-Transformer	80%	80%	64%	64%
	65%	65%	42%	42%
	50%	50%	25%	25%
Primary Reactor	80%	80%	80%	64%
	65%	65%	65%	42%
	50%	50%	50%	25%
Reduced Inrush Types				
Wye-Delta	n/a	100%	33%	33%
Open- or Closed-Transition	n/a	100%	33%	33%

Table 3
Typical Maximum Acceleration Time Settings

Starter Type	Recommended Max. Acceleration Time Setting
Wye-Delta	27 seconds
Auto-Transformer	16 seconds
Across-the-Line	6 seconds

Figure 6
Maximum Acceleration Time DIP Switches

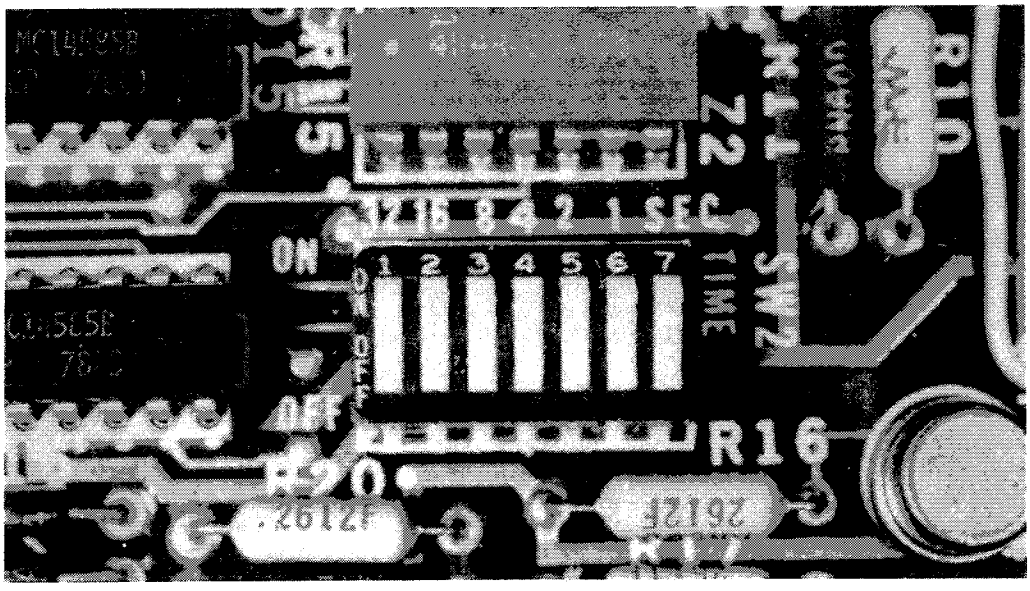

Example
12 seconds = 8 seconds + 4 seconds; therefore, flip DIP switch nos. 3 and 4 to ON.

High-Voltage Compensation Adjustment (SSOL Versions 1, 2, 3 and 4)

While the RLA value shown in the chiller nameplate represents the design nominal voltage, actual job-site voltage often varies from this value. Therefore, it is possible that a higher-than-nominal line voltage condition will cause the motor to generate excessive horsepower without exceeding the current draw shown on the nameplate.

To prevent motor overloading resulting from higher-than-rated voltage, recalibrate the SSOL module in 1 of 2 ways:

[ ] SSOL Versions 1 and 2 Only. Remove the 10% current reset jumper from Terminals J1-J2 in the SSOL (Figure 1); removal of this jumper automatically recalibrates the SSOL so that approximately 90% of the motor nameplate current rating is the new "rated" current for that application.

Note: SSOL setup does not change if the J1-J2 jumper is removed since all SSOL functions are automatically recalibrated.

[ ] SSOL Versions 1 thru 4. Reset the current calibrator. To arrive at a new current calibrator setting, multiply the Isec. value (calculated in "Compressor Motor Overload Setup") by the ratio of the rated line voltage to the actual line voltage.

$$\text{"New" Isec} = \text{Original Isec} \times \frac{\text{Rated Line Voltage}}{\text{Actual Line Voltage}}$$

Example

Original Isec = 4.55
Rated Line Voltage = 460V
Actual Line Voltage = 485V

$$\text{"New" Isec} = 4.55 \times \frac{460V}{485V} = 4.32$$

Using the "new" Isec value, the current calibrator number and Table 1, determine appropriate potentiometer setting; then readjust the pot to this value. (Remember that readjusting the current calibrator not only compensates for the high-voltage condition, but also recalibrates all other SSOL functions.)

* * * * * * *

Note: Whenever the SSOL is recalibrated for high voltage---whether by removing the J1-J2 jumper or by readusting the current calibrator, turn the LRA potentiometer 1 dial setting higher than that indicated in Figure 5 to prevent nuisance "trips" at start-up (since higher-than-nameplate LRA current draw will occur). Also, be sure to record the method---and reason for---high -voltage compensation on the cover of the SSOL module!

Dry-Running Starters w/SSOL Modules

Starter panels equipped with the SSOL module can be dry-run at start-up in the same manner as starters without the SSOL. However, 2 important differences must be noted:

1. The distribution-fault circuit breaker must be disconnected before the starter can be dry run. To disconnect the distribution-fault circuit breaker, simply remove a wire from it. If the breaker is not disconnected, the starter will not sequence, and the SSOL module will lock out on distribution fault as soon as the start sequence begins. (Lockout occurs because the distribution fault trip is initiated when motor current drops below 15% of the RLA with the M1 contactor energized; see "Distribution-Fault Circuit Breaker Operation". This situation will only occur during an actual distribution fault or during a starter dry-run.)

2. The starter will transition as soon as the dry-run is initiated. This immediate transition occurs because the SSOL initiates transition on the basis of motor current draw. During a normal start-up, motor current draw falls from the LRA value to one that is below the RLA because the inlet vanes are closed; when motor current draw falls to 85% of RLA during the start sequence, the SSOL initiates transition.

However, during a dry run, there is no current draw so the SSOL initiates transition immediately (within 1 second).

Note: The starter dry-run procedure is a good way to test the SSOL's distribution fault function; if it is working properly, the distribution-fault circuit breaker will trip as soon as the start sequence is initiated (provided that the breaker was not disconnected).

Operation of the Distribution-Fault Circuit Breaker

"Distribution fault" is defined as the total loss of line voltage for a period lasting less than 60 electrical cycles. This type of short-duration power interruption can be damaging to many types of induction-motor-driven equipment since an induction motor acts as a generator for several seconds after power is disconnected. The voltage generated by a water-cooled CenTraVac motor, for instance, is often sufficient to "hold in" control relays and starter contactors for approximately 60 electrical cycles---or 1 second---when a voltage-loss occurs.

If line voltage is re-established while the contactors are held in by motor-generated voltage---and the two voltages are out of phase, motor torques that are 6 to 10 times greater than the normal running torques can occur. These torques occur as the motor is pulled into phase and may be in either direction (forward or reverse). Such excessive torques severely overload the impeller hub area and may, in turn, upset the impeller keyway or---in severe cases---crack or destroy the impellers.

SSOL modules detect a distribution fault by monitoring current draw and the status of the M1 contactor. The distribution-fault circuit breaker is designed to trip when motor current draw is less than 15% of RLA while the M1 contactor is energized. The SSOL detects the existence of a distribution fault within 1-1/2 electrical cycles, and---within 6 cycles (1/10 of a second) ---trips the distribution-fault circuit breaker to take the compressor motor off line.

Normally, this situation will only occur during an actual distribution fault (or during a starter dry run) since: (a) an induction motor will typically draw more than 15% of RLA---even when completely unloaded, and (b) when the M1 contactor is energized, the motor is running.

Troubleshooting the SSOL

Note: The information presented in the following troubleshooting chart is only applicable for the SSOL; use of this chart alone will not verify the integrity of other starter panel components.

SSOL Troubleshooting Chart

Symptom	Recommended Action
Distribution-fault circuit breaker trips . . .	
1. while the chiller is running.	1. If this fault becomes a nuisance problem, use TOL-90 and the checkout procedures described in TOL-OM-1 to verify that the SSOL is functioning properly. If the results of this checkout indicate that the SSOL is defective, replace it.
2. during the start sequence, at the point when transition should occur.	2. Check for: a. installation of power-factor correction capacitors (PFCCs) on the start contactor (K27, or "1M"). If the PFCCs were incorrectly wired to the run contactor (K28, or "2M") instead of K27, the PFCCs will be placed in parallel at start-up, and the change in capacitance could drive the available current down to 15% of RLA. b. bouncing contacts---especially the auxiliary contacts on the starter contactors.
3. when the starter de-energizes during the normal chiller shutdown sequence.	3. This symptom is usually <u>not</u> the result of a SSOL problem; see service bulletin CTV-SB-76 for corrective action. However, if the suggestions described in CTV-SB-76 do not eliminate this problem, replace the SSOL.
Motor-current-overload circuit breaker trips . . .	
1. at start-up.	1. Check the: a. locked rotor setpoint potentiometer to make sure that it isn't turned too low. To properly set this pot, follow the instructions under "Locked Rotor Current Lockout Adjustment" in this bulletin. **Note:** The locked rotor setpoint pot is <u>only</u> found on Versions 1 and 2 of the SSOL. b. acceleration time setting. See "Maximum Acceleration Time Setup" in this bulletin. c. SSOL with TOL-90 and the instructions provided in TOL-OM-1. If this check indicates that the SSOL is defective, replace it.
2. at transition.	2. Check the SSOL module's terminal strip; <u>if Terminals 5 and 6 are labeled "F1" and "F2"</u>, complete the corrective action described in service bulletin CTV-SB-65.

(Continued on next page . . . . .)

SSOL Troubleshooting Chart (concluded)

Symptom	Recommended Action
Motor-current-overload circuit breaker trips . . . (continued)	
3. immediately after chiller loads up.	3. Check the: a. polarity of the V1-V2 wires connected to the capacity control module in the chiller control panel. b. voltage at V1-V2 in the SSOL. If the voltage measured at V1---with respect to V2---is positive, replace the SSOL.
4. at a value less than 100% of RLA.	4. Check: a. the balance of the 3-phase current. It may be necessary to add the electrolytic capacitor (CPT-335) described in CTV-SB-75. **Note:** The check just described in 4a is only applicable for SSOL Versions 1 and 2. b. for phase loss or phase reversal at the SSOL. To do this, connect the positive (+) lead of an oscilloscope to SSOL Terminal B1 and the negative (-) lead to Terminal B2. The oscilloscope should display a normal sine wave, as shown in Figure 7. If 1 phase is missing, the sine wave will appear as shown in Figure 8; Figure 9 shows the the type of sine wave produced if 1 phase is reversed.
Chiller does not transition.	1. Check for closure of the auxiliary K27 contacts in the SSOL's S1-S2 circuit. 2. Use TOL-90 to perform the "transition level" functional test described in TOL-OM-1. If test results verify that the transition relay on the SSOL is "pulling in", use an ohmmeter to check for closure of the transition relay contacts. If these contacts fail to close, replace the SSOL's transition relay (RLY-849).
Chiller transitions as soon as the start sequence is initiated.	1. Check the 3-phase current signals with an oscilloscope; see Item 4b under "Recommended Action" above. 2. Use TOL-90 and the checkout procedures described in TOL-OM-1 to check SSOL operation. If test results indicate that the SSOL is defective, replace it.

Figure 7
Normal Sine Wave

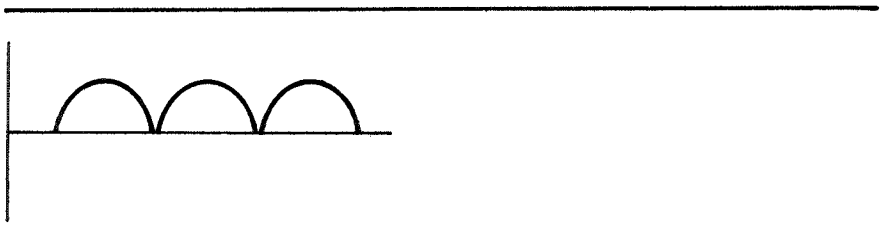

Figure 8
Abnormal Sine Wave:
Missing Phase

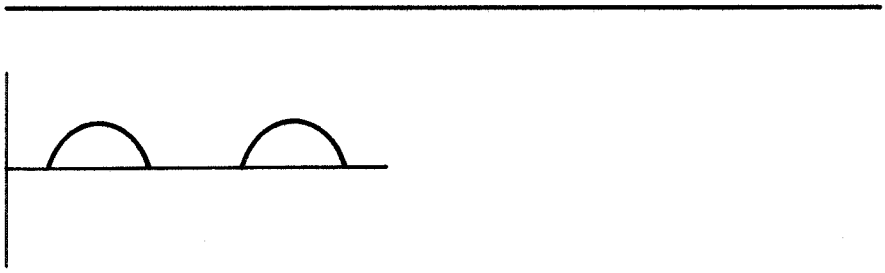

Figure 9
Abnormal Sine Wave:
Phase Reversal

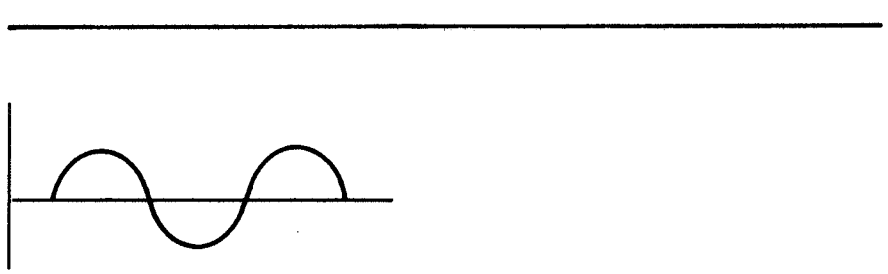

For further information on this product or other Trane products, refer to the "Trane Service Literature Catalog", ordering number IDX-IOM-1. This catalog contains listings and prices for all service literature sold by Trane. The catalog may be ordered by sending a $20.00 check to: The Trane Company, Service Literature Sales, 3600 Pammel Creek Road, La Crosse, WI 54601.

PRINTED BY PRODUCTION SERVICES — LA CROSSE BB/LW

TRANE

General Service Bulletin

CVHE-SB-12A

Library	Service Literature
Product Section	Refrigeration
Product	Centrifugal Liquid Chillers
Model	CVHE
Literature Type	General Service Bulletin
Sequence	12A
Date	4/19/85
File No.	SV-RF-CTV-CVHE-SB-12A-485
Supersedes	

Literature Changes:

Modified "Parts Ordering Information".

SUBJECT: CVHE/CVHB MOTOR OVERLOAD MODULE PROTECTION

INTRODUCTION:

This service bulletin discusses the addition of a surge suppressor across the power supply of CVHE and CVHB solid state motor overload modules. The addition of the suppressor is recommended to provide protection from high voltage spikes which can lead to module failures.

DISCUSSION:

A number of Cutler-Hammer overload modules (Trane part number RLY-765) that have been returned as failed, appear to have been exposed to a high voltage condition. This high voltage could have been caused by inadvertent application of 110 volts through the low voltage side of the module or through transient line voltage spikes which can enter the module through its power supply. The module can be protected from these voltage spikes by the addition of a surge suppression device that connects to the module power supply. These devices are generally referred to as MOV's (metal oxide varistors).

CORRECTIVE ACTION:

Surge suppressors should be installed on all CVHE and CVHB units with solid state overload modules at unit start-up. Units which are being retrofitted to add the new solid state motor protection module should also have the suppressor added. Units that are already started should have the surge suppressor added on an opportunity basis such as a service call or annual maintenance.

Since The Trane Company has a policy of continuous product improvement, it reserves the right to change specifications and design without notice. The installation and servicing of the equipment referred to in this booklet should be done by qualified, experienced technicians.

Install a surge suppressor in the unit control panel across terminals 2 and 3 as shown in Figure 1. The suppressor (MOV) should have the following values:

- Maximum RMS volts -150
- Maximum energy rating - 80 joules
- Average power dissipation - 1 watt
- Peak pulse amps - 6,500

A surge suppressor can only protect against high voltage surges that do not exceed its design rating. Voltage surges in excess of this rating will cause the suppressor to fail. A failed surge suppressor is evident due to its almost total physical destruction. Failure of the suppressor will not interfere with the operation of the unit control system. Periodic inspection of the suppressor should be included with other normal maintenance procedures.

PARTS ORDERING INFORMATION:

The part number for the surge suppressor is SPS-11.

Figure 1
Surge Suppressor
Mounting Location

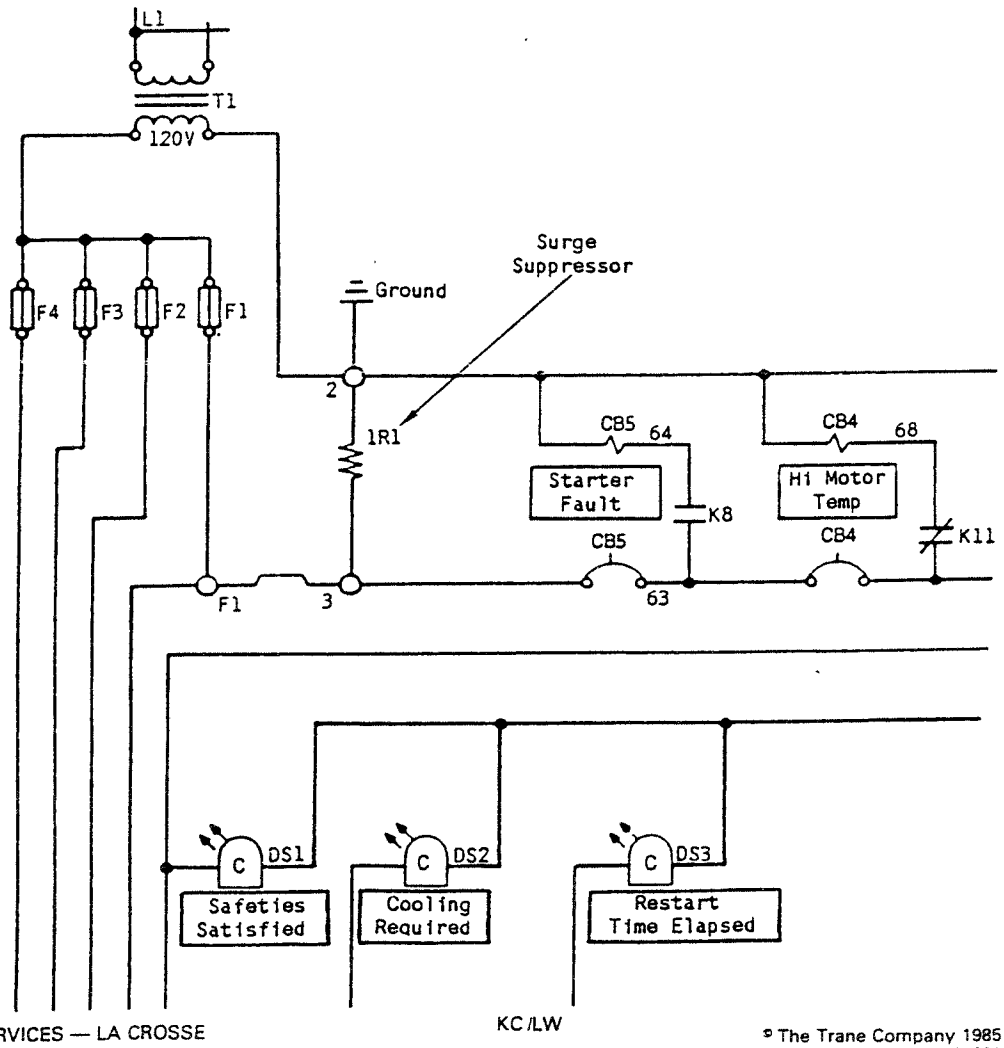

© The Trane Company 1985
La Crosse, Wisconsin 54601
Printed In U.S.A.

TRANE

General Service Bulletin

CVHE-SB-15

Library	Service Literature
Product Section	Refrigeration
Product	Centrifugal Liquid Chillers
Model	CVHE
Literature Type	General Service Bulletin
Sequence	15
Date	10/14/86
File No.	SV-RF-CTV-CVHE-SB-15-1086
Supersedes	

SUBJECT: "STARTER-FAULT" BREAKER/K10 RELAY RACE (CVHEs OF "A" THRU "J" DESIGNS)

INTRODUCTION:

Nuisance tripping of the unit control panel's "starter-fault" circuit breaker may occur in CVHEs of "A" through "J" design as a result of a "relay race" between the K10 relay and the auxiliary contacts on the 1M (K27) contactor. This service bulletin discusses why these nuisance trips occur, as well as what can be done to prevent them.

DISCUSSION:

Ordinarily, a normal "start" signal from Terminal 14 of the unit control panel energizes the 1M (K27) contactor which, in turn, closes 2 sets of normally-open auxiliary contacts. (Refer to the typical electrical schematic in Figure 1.) The auxiliary contacts located between Wires 13 and 14 (Lines 26 and 29) close first, followed by those located between Wires 19 and 20 (Line 33).

Notice that closure of the auxiliary contacts between Wires 13 and 14 establishes a "holding" circuit for the "start" signal before the contacts between Wires 19 and 20 can close. This sequence of events assures that the "start" signal is not interrupted when the K10 relay energizes and opens its normally-closed contacts between Wires 82 and 14 (Line 29).

Let's look at what would happen if the contact closure sequence were reversed. Once the inhibit circuit (Line 26) is satisfied (i.e., evaporator and condenser water flows are proven, and oil pressure is established), a "start" signal is sent to the starter panel through the normally-closed set of K10 contacts. If the K10 relay energizes (via closure of the auxiliary contacts between Wires 19 and 20) before the "holding" circuit is established, the starter energizes–but only momentarily. As soon as the normally-closed K10 contacts between Wires 82 and 14 open, the starter panel drops out of the circuit, and the unit control panel's "starter fault" circuit breaker trips 15 to 20 seconds later.

Since The Trane Company has a policy of continuous product improvement, it reserves the right to change specifications and design without notice. The installation and servicing of the equipment referred to in this booklet should be done by qualified, experienced technicians.

Figure 1
Typical Electrical Schematic
for CVHE Units w/Electronic
Capacity Control
("F" thru "J" Designs Shown)

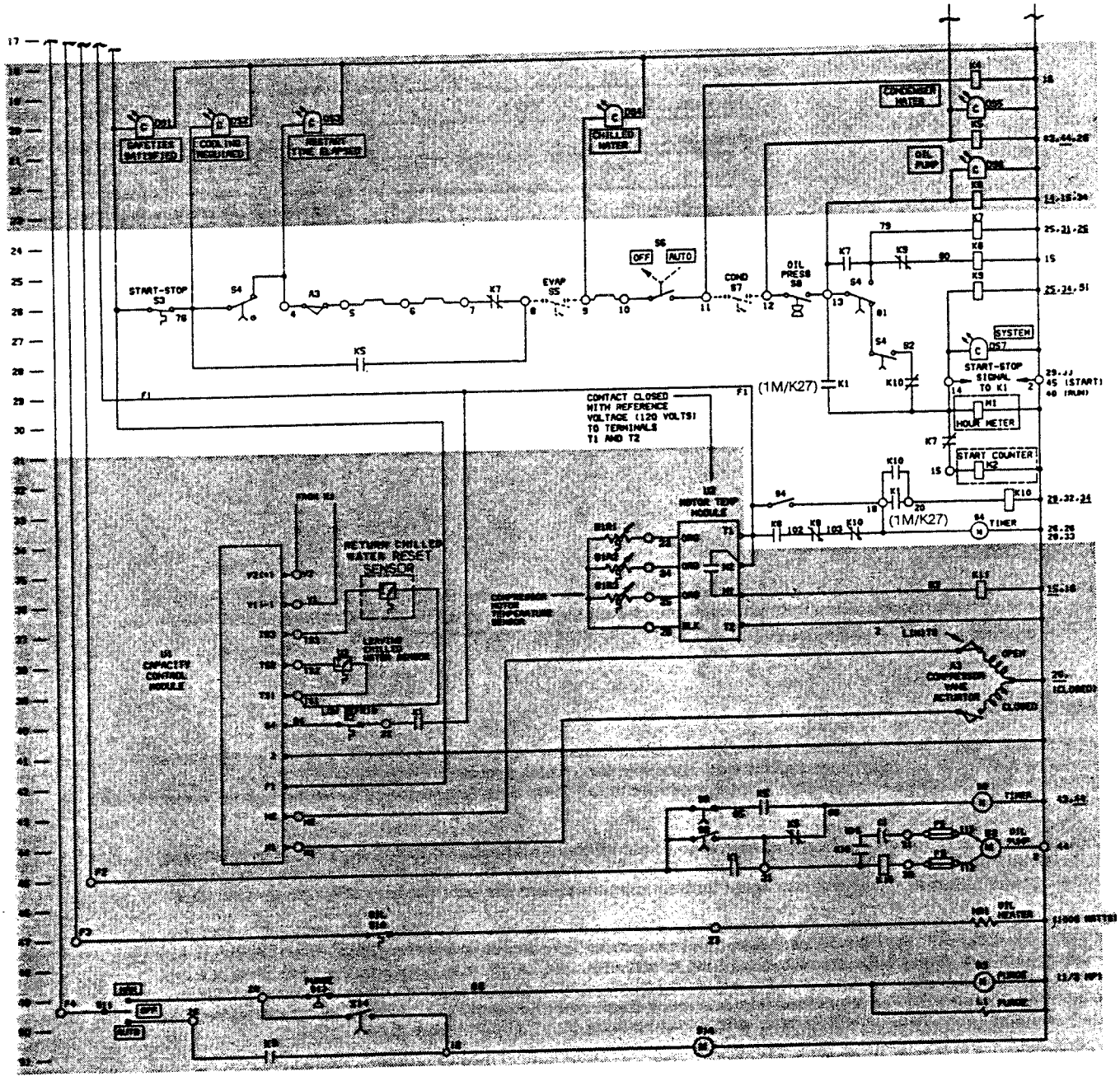

WARNING
DISCONNECT ELECTRICAL POWER SOURCE TO PREVENT INJURY OR DEATH FROM ELECTRICAL SHOCK

CAUTION
Use copper conductors only to prevent equipment damage

Drwg. X39470376

The Trane Company
La Crosse, Wisconsin 54601-7599
Printed in U.S.A.

©American Standard Inc. 1986

CORRECTIVE ACTION:

Following are 2 solutions designed to eliminate nuisance "starter fault" circuit breaker trips caused by a "relay race" between the K10 relay and the 1M (K27) contactor:

1. Establish the correct wiring sequence for Wires 13 and 14, and Wires 19 and 20.

Ensure that Wires 13 and 14 are connected to a set of normally-open, auxiliary contacts on the 1M (K27) contactor; contacts selected for this purpose should be located as close to the auxiliary-contact actuator as possible (i.e., the auxiliary switch located nearest the starter back panel). Then, connect Wires 19 and 20 to a set of normally-open auxiliary contacts located farther out on the auxiliary contact stack.

This wiring arrangement encourages establishment of the "holding" circuit before the normally-closed contacts of the K10 relay can open.

Note: The corrective action recommended above will successfully eliminate nuisance "starter fault" circuit breaker trips in most instances. However, if adjustments to the wiring sequence of Wires 13-14 and Wires 19-20 do not prevent this type of nuisance trip from recurring, it may be necessary to install a time delay relay. See Item 2 below for instructions.

2. Add a 0.3-second time delay relay to the K10 relay circuit.

Connect the normally-open contacts of 0.3-second time delay relay in series with the K10 relay; make sure that the contacts of the time delay relay are installed upstream of the K10 relay coil. Figure 2 illustrates this wiring arrangement.

The addition of this relay postpones the energizing of the K10 relay by 0.3 seconds, thereby assuring that the start signal "holding" circuit is established before the normally-closed K10 contacts open.

Figure 2
Addition of a 0.3-Second Time Delay Relay to the K10 Relay Circuit

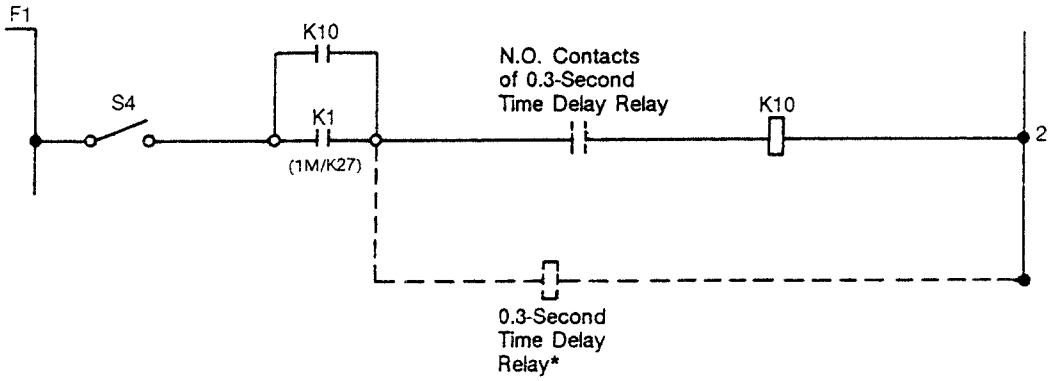

*The 0.3-second time delay relay typically used for this purpose is RLY-872.

For further information on this product or other Trane products, refer to the "Trane Service Literature Catalog", ordering number IDX-IOM-1. This catalog contains listings and prices for all service literature sold by Trane. The catalog may be ordered by sending a $20.00 check to: The Trane Company, Service Literature Sales, 3600 Pammel Creek Road, La Crosse, WI 54601.

PRINTED BY PRODUCTION SERVICES — LA CROSSE BB/LW

TRANE

Operation Maintenance

LIBRARY	Service Literature
PRODUCT SECTION	Service Products
PRODUCT	CenTraVac
MODEL	CTV Motor Starter Protection System
LITERATURE TYPE	Operation/Maintenance
SEQUENCE	2
DATE	September 1984
FILE NO.	SV-SP-CTV-TOL-OM-2-984
SUPERSEDES	

ORDERING NO. **TOL-OM-2**

Since the Trane Company has a policy of continuous product improvement, it reserves the right to change specifications and design without notice. The installation and servicing of the equipment referred to in this booklet should be done by qualified, experienced technicians.

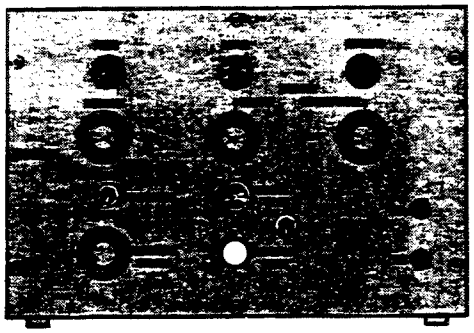

TOL-91

TRANE AGM AND HONEYWELL 901-D CAPACITY CONTROL MODULE TESTER

FOR USE WITH MODEL CVHE,CVHB AND CVAC CENTRIFUGAL CHILLERS

TABLE OF CONTENTS

Subject	Page
INTRODUCTION	2
SETUP FOR CAPACITY CONTROL MODULE CHECKOUT	3
TOL-91 Setup	4
Trane Capacity Control Module Setup	4
CAPACITY CONTROL MODULE CHECKOUT PROCEDURE	5

© THE TRANE COMPANY 1984
COMMERCIAL SYSTEMS GROUP
LA CROSSE, WISCONSIN 54601-7599
PRINTED IN U.S.A.

FOR FURTHER INFORMATION ON THIS PRODUCT OR OTHER TRANE PRODUCTS, REFER TO THE "TRANE SERVICE LITERATURE CATALOG", ORDERING NUMBER IDX-IOM-1. THIS CATALOG CONTAINS LISTINGS AND PRICES FOR ALL SERVICE LITERATURE SOLD BY TRANE. THE CATALOG MAY BE ORDERED BY SENDING A $15.00 CHECK TO: THE TRANE COMPANY, SERVICE LITERATURE SALES, 3600 PAMMEL CREEK ROAD, LA CROSSE, WI 54601.

TO HELP ENSURE OPTIMUM PERFORMANCE, BE SURE TO SPECIFY QUALITY TRANE PARTS.

INTRODUCTION

This manual explains how to properly use TOL-91 to check the operating condition of the Trane AGM or Honeywell 901-D capacity control module in the field or at the shop. Be sure to follow these instructions carefully to ensure an accurate diagnosis of the control module's condition, and to avoid damaging either the module or the tester. Illustrations of the AGM capacity control module and TOL-91 are provided in Figures 1 and 2.

NOTE: While the copy and illustrations in this manual relate specifically to the AGM capacity control module used on CVHE and CVHB units, the same test procedure can be used to test the Honeywell 901-D module used on CVAC units. Any differences between the test procedures for these two types of modules are explained in the instructions.

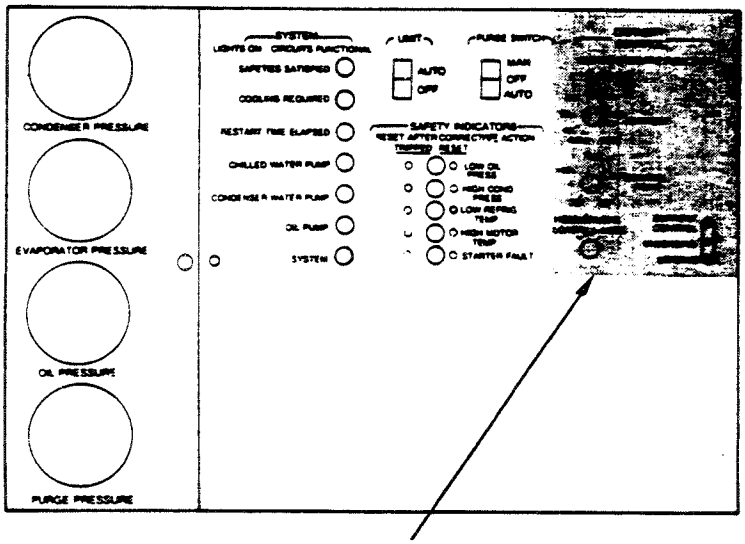

CONTROL PANEL SIDE

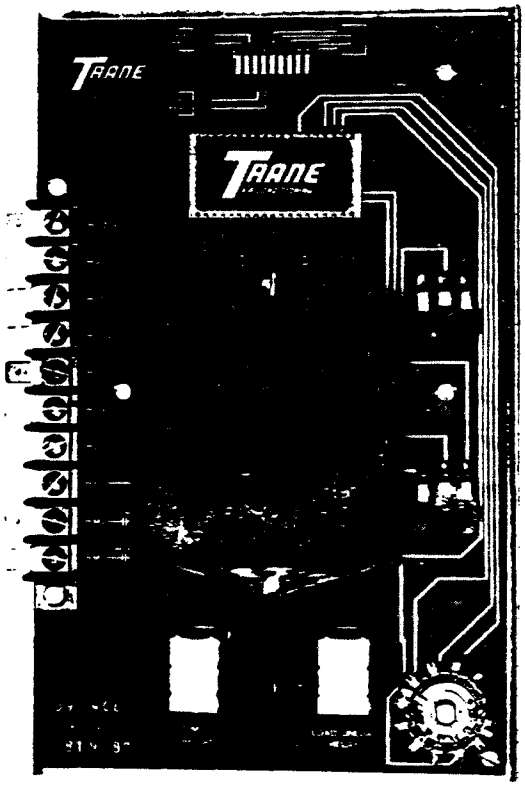

BACK OF CONTROL MODULE

FIGURE 1 - Trane AGM Electronic Capacity Control Module (CVHE/CVHB Units)

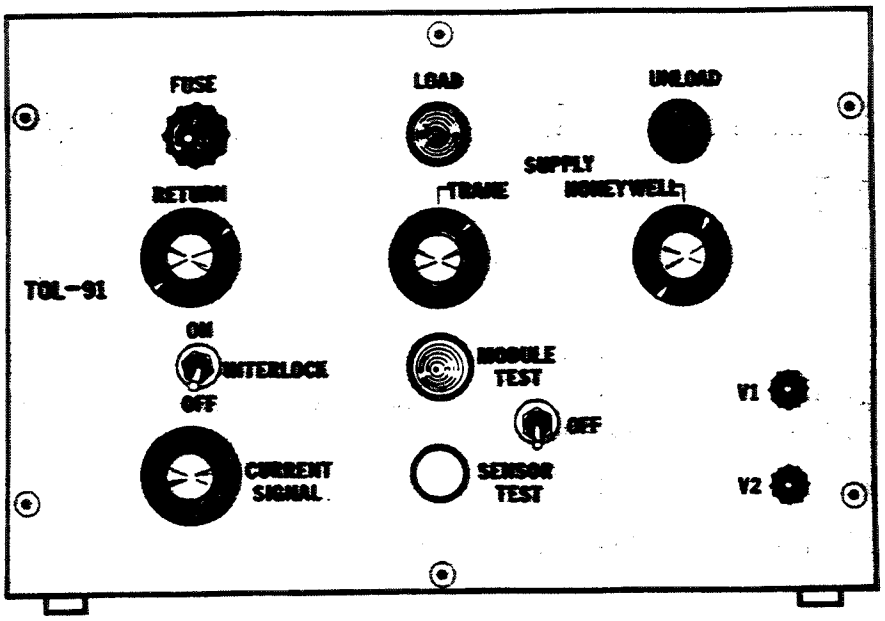

FIGURE 2 - TOL-91 (Capacity Control Module Tester)

SETUP FOR CAPACITY CONTROL MODULE CHECKOUT

WARNING: OPEN AND LOCK UNIT DISCONNECT TO PREVENT INJURY OR DEATH DUE TO ELECTRICAL SHOCK OR CONTACT WITH MOVING PARTS.

NOTE: Whenever TOL-91 is used to test capacity control modules in the field, be sure to disconnect all electrical wiring to the module before connecting the control module tester.

Connect the leads of the TOL-91 wiring harness to the proper terminals on the capacity control module. Notice that the terminal designations on the Trane AGM and Honeywell 901-D capacity control modules are different; the connection arrangement on each module is shown in Table 1.

TABLE 1 - Capacity Control Module Connection Arrangements

AGM CAPACITY CONTROL MODULE	HONEYWELL 901-D CAPACITY CONTROL MODULE
V2	R1
V1	R2
TS3	X2
TS2	XX1
TS1	M1
84	M2
2	V2
F1	V1
M2	TS1
M1	HTS2

To accomodate the differences in terminal designations, each of the TOL-91 wiring harness leads is marked with dual terminal identification numbers. These numbers represent the corresponding terminals on the AGM and Honeywell 901-D control modules. Once the harness is attached to the control module, **doublecheck each connection to ensure that TOL-91 is properly wired.**

NOTE: The TOL-91 wiring harness does not contain a wire for Terminal R2 of the Honeywell 901-D capacity control module since Terminals R2 and X2 are jumpered together.

TOL-91 Setup

Adjust the TOL-91 controls to the positions described below; refer to Figure 2 for the locations of these controls.

1. Current Signal Knob = Twelve O'Clock Position
2. Supply Knobs = Twelve O'Clock Position
3. Return Knob = Twelve O'Clock Position
4. Interlock Switch = ON Position
5. Module/Sensor Test = OFF Position

To read DC voltage signals for each of the test positions in this checkout procedure, adjust a digital voltmeter to the low DC voltage scale and attach the meter leads to Terminal Posts V1 and V2 on TOL-91.

Trane Capacity Control Module Setup (AGM)

1. Check the position of the dip switches located on the back of the control module. At least one of the dip switches of each component program (i.e., reset ratio, deadband, and load delay) should be positioned at ON. (The back of the control module is illustrated in Figure 3.)

   Use of these dip switches will enable the operator to check deadband, reset and load delay time. (Additional selections may be made, provided that all three of these functions--deadband, reset and load delay--are in the test circuit. Dip switch positions for alternate functions may be found in the CVHE Service Guide (HCTV-SG-2), Section 7.12.)

2. Before beginning any of the test procedures described in the following section, set the current limit control (labelled % CURRENT) on the Trane capacity control module to 100 percent. Then, adjust the module/sensor test switch on the TOL-91 to the MODULE TEST position.

3. Increase the current signal from TOL-91 until the amber current control light on the unit control panel illuminates. At this point, the digital voltmeter should register 8.25 VDC.

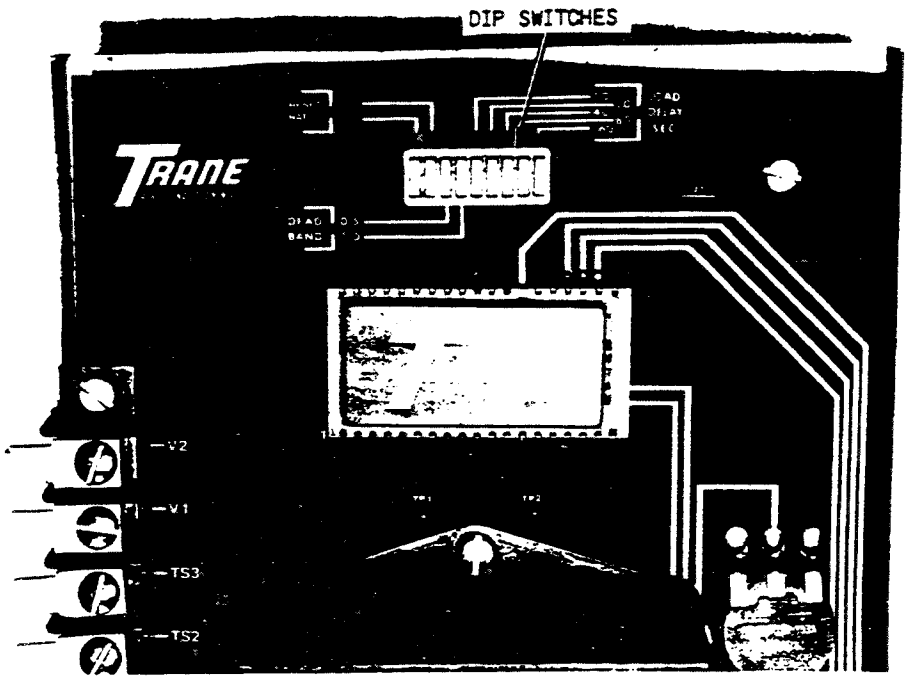

FIGURE 3 - Dip Switches (Back of Trane AGM Capacity Control Module)

CAPACITY CONTROL MODULE CHECKOUT PROCEDURE

To initiate the control module checkout procedure, a load signal must be sent to the capacity control module. To accomplish this on either a Trane AGM or Honeywell 901-D module, adjust the module/sensor test switch (on the TOL-91) to the MODULE TEST position. Then, rotate the load supply knob to the right of the twelve o'clock position.

NOTE: When testing the Trane AGM capacity control module, any of the adjustments made with the supply or return knobs of TOL-91 will be followed by a four to six-second pause to allow for the simulated temperature signal change.

NOTE: Be sure to adjust the Honeywell 901-D capacity control module to current limit at 8.25 VDC when functioning at full load. In addition, the temperature control knob must be positioned at 45 degrees.

1. Load Limit

Adjust the % CURRENT knob on the control module to 80 percent; then increase the current signal on TOL-91 until the amber current control light on the control panel illuminates. This light indicates that the current limit has been reached.

NOTE: On Honeywell 901-D control modules only, any increase in current beyond the current limit setpoint will result in a continuous unload signal.

2. **Load Limit and Unload 103 Percent (Trane AGM Control Modules Only)**

   Once the load limit is established (Step 1), slowly rotate the TOL-91 current signal knob until the pulsing, red UNLOAD light (on TOL-91) illuminates; this indicates an "over current" of 103 percent. (At this time, a constant red UNLOAD light also illuminates on the control module.)

   If functioning properly, the capacity control module should emit unload pulses at 0.25-second intervals until the chiller load is reduced to 100 percent.

3. **Load Limit and Unload 105 Percent (Trane AGM Control Modules Only)**

   Continue to rotate the TOL-91 signal knob until the UNLOAD lights on the TOL-91 and the control module indicate a continuous unload signal to a current level of 95 percent.

4. **Temperature Control**

   a. Readjust the current signal knob on TOL-91 to produce a load (i.e., green) signal on the capacity control module.

   b. Position the temperature control knob on the control module to the 45-degree setting.

   c. Slowly rotate the TOL-91 supply knob (i.e., "Trane" when testing the Trane AGM capacity control module, or "Honeywell" when testing the Honeywell 901-D capacity control module) to the left until an unload (i.e., red) signal is displayed both on the capacity control module and the TOL-91.

      With finer adjustment of the TOL-91 supply knob, a deadband or null condition can be obtained.

5. **Interlock**

   Turn the TOL-91 interlock from ON to OFF. Notice that an immediate and continuous unload (i.e., red) signal appears on the Trane AGM capacity control module, while a current limit with a continuous unload (i.e., red) signal appears on the Honeywell 901-D capacity control module.

   This signal indicates either that the inlet vanes are closing because of a low refrigerant temperature, or that the starter is being de-energized.

   Return the interlock switch to the ON position before proceeding to Step 6.

6. **Function Switch**

   Rotate the function switch on the capacity control module and note the action of the mode indicator lights. When the function switch is positioned at:

   a. LOAD, the green indicator light should illuminate.

   b. HOLD, none of the indicator lights should illuminate.

c. UNLOAD, the red indicator light should illuminate.

d. AUTO, the mode signal will respond to the simulated chilled water or current input signal.

7. **Load Limit in Any Function**

With the % CURRENT knob on the control module still set at 80 percent, adjust the control module function switch to any function position. Then, increase the current signal from TOL-91 and verify that the current limit and unload (i.e., red) indicator lights illuminate.

8. **Reset (Trane AGM Capacity Control Module Only)**

Set the temperature control knob on the capacity control module at 45 degrees, and adjust the TOL-91 "Trane" supply knob until a deadband or null condition exists. Then, simulate a decrease in return water temperature by turning the TOL-91 return signal knob to the left; the UNLOAD (i.e., red) light should illuminate.

Illumination of the UNLOAD light indicates automatic reset when the return water falls within the prescribed range of the reset sensor (i.e., as determined by the setting of the control point knob on the capacity control module).

Readjust the TOL-91 return knob to its original position before proceeding to Step 9.

9. **Sensor Test (Trane AGM Capacity Control Module Only)**

NOTE: A digital volt-ohmmeter (VOM) and jumper wire are required to conduct this test.

a. Adjust TOL-91 to the sensor test mode.

b. Connect the sensor and VOM in series using the two leads (with alligator clips) provided on TOL-91. See Figure 4.

c. Set the VOM for DC voltage and the low microamp (2 ma) range.

d. Convert the reading obtained from the VOM to water temperature using the data provided in Table 2.

NOTE: Readings from the VOM are equivalent to the Kelvin temperature scale.

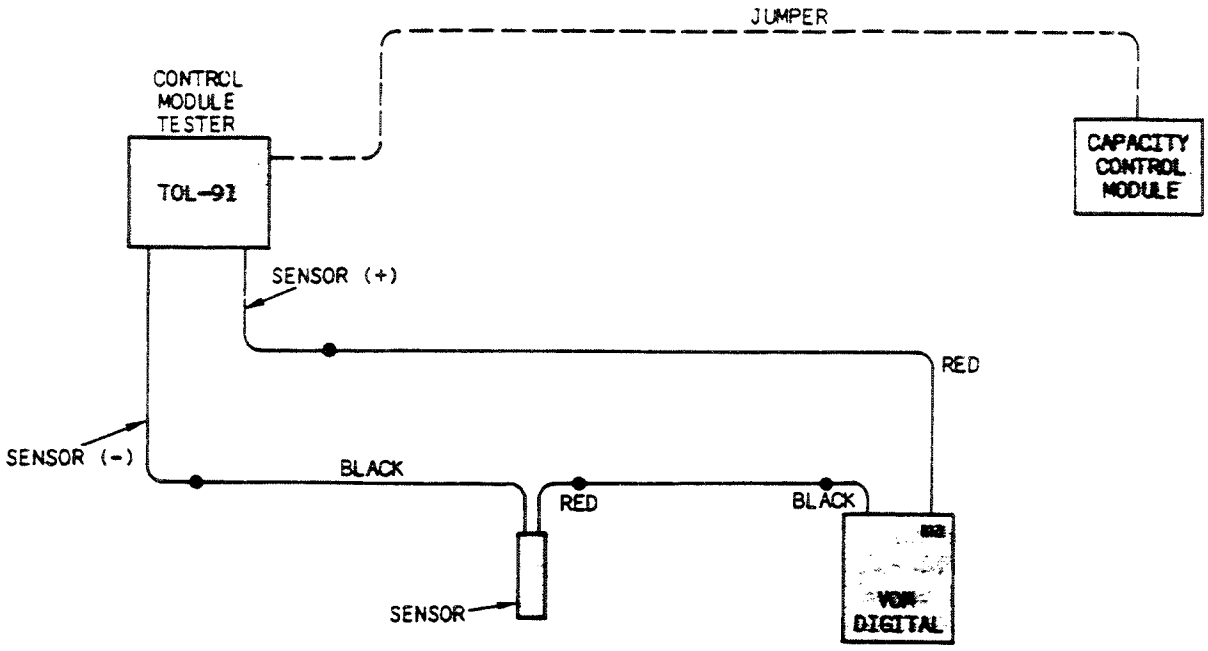

FIGURE 4 - Hookup Schematic for Sensor Test (AGM Capacity Control Module)

TABLE 2 - Temperature Conversion Chart

DEGREES FAHRENHEIT (°F)	DEGREES CELSIUS (°C)	DEGREES KELVIN (°K)*	DEGREES FAHRENHEIT (°F)	DEGREES CELSIUS (°C)	DEGREES KELVIN (°K)*
32	0.00	273.20	57	13.87	287.07
33	0.55	273.57	58	14.43	287.63
34	1.11	274.31	59	14.98	288.18
35	1.66	274.86	60	15.54	288.74
36	2.22	275.42	61	16.00	289.29
37	2.77	275.97	62	16.65	289.85
38	3.23	276.53	63	17.20	290.40
39	3.88	277.08	64	17.76	290.96
40	4.44	277.64	65	18.31	291.51
41	5.00	278.20	66	18.87	292.07
42	5.56	278.75	67	19.42	292.62
43	6.11	279.31	68	19.98	293.18
44	6.67	279.86	69	20.53	293.73
45	7.22	280.42	70	21.09	294.29
46	7.78	280.97	71	21.64	294.84
47	8.33	281.53	72	22.20	295.40
48	8.89	282.08	73	22.75	295.95
49	9.44	282.64	74	23.31	296.51
50	10.00	283.20	75	23.86	297.06
51	10.56	283.75	76	24.42	297.62
52	11.11	284.31	77	24.97	298.17
53	11.67	284.60	78	25.53	298.73
54	12.22	285.42	79	26.08	299.28
55	12.78	285.97	80	26.64	299.84
56	13.32	286.52			

*Degrees Kelvin = Microamps

PRINTED BY PRODUCTION SERVICES — LA CROSSE

BLB/LLW

CAPACITY CONTROL MODULE MOD0182 INSTALLATION INSTRUCTIONS

General

The Trane MOD0182 Capacity Control Module (CCM), has been designed to replace the pre-micro CVHE/CVHB/CVAC modules CNT0852, CNT0875 and CNT0876.

Some applications require different control algorithms to provide accurate and stable temperature control at system start-up. To accommodate these system differences, the MOD0182 Capacity Control Module can be configured for two different control sequences.

Installation/Wiring

The mounting and wiring terminal locations for the new module are very similar to the previous modules. However, there are additional terminals associated with a start-stop function, chilled water reset, remote demand limit and % RLA output that were not originally provided on the previous modules. Use of these and the necessary wiring instructions are explained in the **Added Features** section. The information below provides installation and mounting instructions that must be followed closely.

A plastic parts bag is provided with each new module. This bag contains the following parts:

- This manual, 2764-0009-05-00
- Three #8-32 x .375 SEM machine screws
- An options label, 6400-0661-01
- A short ground strap assembly
- A long ground strap assembly
- Two #10-32 x .500 machine screw
- Four #10 star washers
- Two #10 nut
- Two 2000 Ohm 20 watt resistors
- Three knobs
- A mounting template, 6400-0670-01

1. Mounting

a. The new module requires three mounting holes, two of the existing ones used for the original control and a third one to be added. Align the two large holes on the provided mounting template, 6400-0670-01 with the two existing holes used to mount the original control. The holes in the template are large enough to secure them with screws. A hole with a black circle around it is provided where the third mounting hole is to be located. Use a 1/4 inch drill bit.

b. Secure the new module to the door with the three provided #8-32 X .375 SEM machine screws. Do not use the existing thread forming screws used to mount the original control. They will damage the new module. The screws should not be over .375 inches long so as to not damage internal components. Also the star washer SEM is provided to insure electrical continuity through the paint.

c. On the provided Options label, 6400-0661-01, peel off the "40 to 100" label and place over the "% Current" area. Align using the top and side notches.

d. On the provided Options label, peel off the appropriate label to be applied over the "Control Point" area. Labels differ depending on whether the chiller is standard or extended temperature range and whether english or metric units are desired. Align using the bottom and side notches.

e. Install the three provided knobs. The knobs on the existing control will not work.

2. Connection Of The Ground Straps

a. Strip the insulation off the short ground strap and install on TB11-8.

Form 1-15.140(894)
Supercedes 1-15.140(693)

©American Standard Inc. 1994

2. Connection Of The Ground Straps (continued)

b. Route the short ground strap over to the #10-32 machine screw used to secure the front panel graphics to the door. This screw is located next to the door hinge midway between the top and bottom edges. If this screw is not in place, use one of the provided #10-32 screw sets and drill a hole. The two star washers are to be placed in contact with the door surface to allow conduction through the paint.

c. Remove the nut on this #10-32 screw leaving the star washer in place.

d. Install the ring quick connect terminal from both the short and long ground straps. Secure with the existing nut.

e. Run the long ground strap along the existing wiring harness into the panel.

f. Secure the ring terminal on this side of the long ground strap to the panel wall via the supplied #10 machine screw, star washers and nut. The two star washers are to be placed in contact with the panel wall to allow conduction through the paint.

g. Secure both the long and short ground straps to the existing wiring harness to prevent binding when the panel door is closed.

3. CCM Temperature Sensors

The leaving and/or return chilled water sensors presently used on the pre-micro CVHE/CVAC modules CNT0852, CNT0875 and CNT0876 will not work with the new module. New sensors must be ordered when ordering the new module.

There are different sensors required depending on the desired options.

a. If neither the chilled water reset feature or the added feature of start differential (explained later) is desired, then only the CCM leaving chilled water sensor, SEN0132 needs to be ordered.

b. If either or both the chilled water reset feature and/or the added feature of start differential is desired, then a matched pair of the leaving chilled water sensor and return chilled water sensor needs to be ordered. Quantity one SEN0205 consists of this matched pair. Notice that since both sensors come with the matched pair, the SEN0132 sensor need not be ordered.

Both the SEN0132 and SEN0205 sensors fit in the existing wells. They, however, do fit loosely so a suitable quantity of thermal mastic heat paste is needed to secure the sensor.

4. Use on Air-Cooled Chillers

The actuators on air-cooled chillers are operated by 24 VAC relays. The triacs in the CCM module output 115 VAC. For this reason, 115 volt relays must be installed in the actuator circuit. To provide sufficient load on the module triacs when using the relays, a 2000 ohm, 20 watt resistor (included) **must** be installed in parallel with the coils of each relay. Because the resistors run warm, they should be mounted at least 4" from other components.

Figure 1

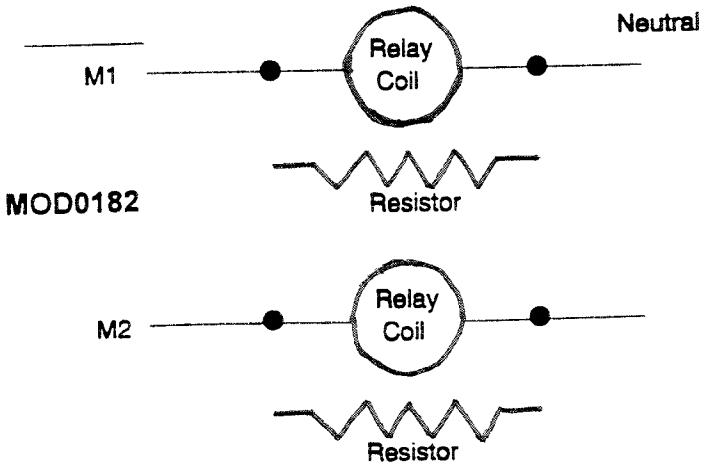

Control Set-Up

A. Control Range Adjustment

The modules normal control range is 35° F - 55° F. Extended range from 20° F - 70° F is available by setting the dip switch SW2-7 to the on position. For normal range switch, SW2-7 should be in the off position.

B. Dead Band

The module dead band can be set as follows:

Switch Position SW2-5	Switch Position SW2-6	Dead Band
Off	Off	±0.25° F
On	Off	±0.50° F
Off	On	±1.00° F
On	On	±1.50° F

C. Reset Ratio Schedule

The reset control process provided in the CCM uses the active control point, design delta temperature setting and the return chilled water temperature to determine the absolute amount of reset required. A return (entering) chilled water sensor must be installed in the system in order to use this feature. See the section on Installation/Wiring.

Switch Position SW2-3	Switch Position SW2-4	Reset Ratio	Deg. of Control Point Reset for Every 1° F Drop in Return Chilled Water Temp.
Off	Off	Infinite	0.0° F
On	Off	2.0	0.5° F
Off	On	1.0	1.0° F
On	On	0.5	2.0° F

The reset ratio is the Degs. F drop in the return chilled water temperature needed to cause a 1° F reset upward of the leaving chiller water temperature. See section D to determine how to set the design delta temperature when using the modules chilled water reset capabilities. If a remote analog input signal is to be used to control chilled water reset see Paragraph C in Added Features Section.

D. System Design Delta Temperature

When using a chilled water reset sensor, you must indicate to the module the system design chilled water temperature differential. Example: Unit design specification calls for 55° F entering chilled water and 45° F leaving chilled water. In this example, the design delta temperature is 10° F. Choose the setting closest to your system design specifications.

Switch Position SW3-7	Switch Position SW3-8	Design Delta Temperature
Off	Off	5° F
On	Off	10° F
Off	On	15° F
On	On	20° F

E. Load Delay

These switches control the off delay time between load and unload pulses.

E. Load Delay (continued)

Switch Position SW3-4	Switch Position SW3-5	Switch Position SW3-6	Load Delay
Off	Off	Off	10 Secs.
On	Off	Off	20 Secs.
Off	On	Off	30 Secs.
On	On	Off	40 Secs.
Off	Off	On	50 Secs.
On	Off	On	60 Secs.
Off	On	On	70 Secs.
On	On	On	80 Secs.

F. Current Control Setting

When using this module to replace CNT0852, CNT0875 or CNT0876 which obtain a chiller current level input signal from the Cutler-Hammer solid state overload (0 to -10 VDC), the switches SW1-1 through SW1-6 must be configured as follows. This corresponds to 8.25 VDC at full load.

SW1 Position					
1	2	3	4	5	6
On	On	Off	On	Off	On

G. System Start-Up Temperature Control

For operation in a typical comfort cooling, single chiller application, SW3-9 should be placed in the "On" position. The control will limit loading and control the leaving chilled water temperature to 5 degrees above the active setpoint for the first 15 minutes of operation to avoid overshoot during system pull down. After 15 minutes the control will allow further loading to bring the leaving chilled water to the active setpoint. Note: The 15 minute timing sequence begins when power is applied to pin 84.

With SW3-9 in the "Off" position, the unit will immediately control to the active setpoint upon start-up.

SW3-9	Operation
ON	Controls to 5° F above active setpoint for first 15 min. of operation.
OFF	Controls immediately to active setpoint.

Added Features

A. Start Differential

This module has a start/stop differential feature that will open and close a circuit between terminals TB11-6 and TB11-7 on the module, and that can be wired into the existing control scheme. In order to use the start-up/stop differential feature a return (entering) chilled water sensor must be used. See the section on Installation/Wiring. This feature allows you to set the chiller starting point based on the chilled water setpoint. Example: You may choose to set the chiller to start when the actual chilled water temperature gets to 7° F above the current module setpoint of 45° F. In this case, the chiller will start when the entering chilled water temperature rises to 52° F. The chiller offpoint is fixed at 1° below setpoint. Once the leaving chiller water temperature in the example above drops to 44° (1° F below setpoint), the chiller will stop after a time delay period. This period of delay will vary and shorten if the return chilled water temperature continues to drop below the 1° F off setting. The differential to start and the chiller off point will vary as the setpoint is changed. To select the differential to start, set switches SW3-1 through SW3-3 as follows:

A. Start Differential (continued)

Switch Position SW3-1	Switch Position SW3-2	Switch Position SW3-3	Differential To Start
Off	Off	Off	2 ° F
On	Off	Off	3 ° F
Off	On	Off	4 ° F
On	On	Off	5 ° F
Off	Off	On	6 ° F
On	Off	On	7 ° F
Off	On	On	8 ° F
On	On	On	10 ° F

B. Remote Demand Limit

The original CNT0852, CNT0875 and CNT0876 required an interface module to accept a remote 0-10 VDC or 4-20 mA input signal for current demand limiting. The new module will accept these signals directly at terminals TB12-1 and TB12-2 (See Figure 1). To select a voltage or current input, set the dip switch SW2-1 as follows:

SW2-1	Remote Signal
Off	Voltage Source
On	Current Source

When using a voltage source signal, the relationship to demand limit is shown below.

VDC	Load
0.0- 2.0	100%
2.0-10.0	115-(7.5 X VDC)
0.0-12.0	40%

Example: 5.0 VDC = 115-(7.5 X 5.0) or 77.5% maximum current

When using a current source signal, the relationship to demand limit is shown below.

mA	Load
0.0- 4.0	100%
4.0-20.0	115-(3.75 X mA)
20.0-24.0	40%

Example: 10mA = 115-(3.75 X 10.0) or 77.5% maximum current

The maximum voltage allowed from the remote device is 18 VDC. The maximum current allowed is 36 mA DC.

IMPORTANT: When no remote device is connected, the switch SW2-1 should be **ON**.

CAUTION: The 4-20mA input of this module conforms to ANSI standard for 4-20mA transmitters #ANSI-MC12.1-1975. TB12 PIN2 marked "input-" for both the 0-10 and 4-20mA transmitters is at ground potential. Review of individual 4-20mA transmitters attached to this input is strongly recommended to prevent damage to this module or the 4-20mA transmitter driving this module. When the CCM is used with a non-isolated transmitter, an isolating transmitter may be required such as Trane PLU0172 and TDR0271. Contact Trane customer service for further clarification.

C. Remote Chilled Water Reset

The original CNT0852, CNT0875 and CNT0876 modules required an interface module CNT0902 to accept a remote 0-10 VDC or 4-20 mA input signal for chilled water reset. To allow a remote input signal to take priority for control of chilled water reset switches SW2-3 and SW2-4 must both be in the OFF position. The new module will then accept these inputs directly at terminals TB12-3 and TB12-4 (see Figure 2). To select a voltage or current input set the dip switch SW2-2 as follows:

SW2-2	Remote Signal
Off	Voltage Source
On	Current Source

When using a **voltage source**, the relationship to chilled water reset is shown below.

VDC	Reset
0.0- 2.0	0° F Reset
2.0-10.0	(4 X VDC)-8
10.0-12.0	32° F Reset

Example: 3.0 VDC = (4 X 3)-8 = 4°. F of reset

When using a **current source signal**, the relationship to chilled water reset is shown below.

mA	Reset
0.0- 4.0	0 ° F Reset
4.0-20.0	(2 X mA)-8
20.0-24.0	32° F Reset

Example: 6.0mA = (2 X 6)-8 = 4° F of reset

The maximum voltage allowed from the remote device is ± 18 VDC. The maximum current allowed is ±36 mA DC.

IMPORTANT: When no remote device is connected, the switch SW2-2 should be **ON**.

CAUTION: The 4-20mA input of this module conforms to ANSI standard for 4-20mA transmitters #ANSI-MC12.1-1975. TB12 PJN4 marked "input-" for both the 0-10 and 4-20mA transmitters is at ground potential. Review of individual 4-20mA transmitters attached to this input is strongly recommended to prevent damage to this module or the 4-20mA transmitter driving this module. When the CCM is used with a non-isolated transmitter, an isolating transmitter may be required such as Trane PLU0172 and TDR0271. Contact Trane customer service for further clarification.

D. % RLA Output, TB12-5 to TB12-6

An additional output is provided which indicates the present % RLA current draw of the compressor motor. It basically is a 0 to 20 mAmp output to be monitored by an upstream device like the Tracer.

The relationship between motor % RLA and output current is:

%RLA = Current Output (mA) x 5.35
Example: Output 10 mA x 5.35 = 53.5% RLA.

Output currents greater than 20.0 mA are out of range. The allowed impedance of the monitoring device is 0.0 to 250 ohms.

Figure 2

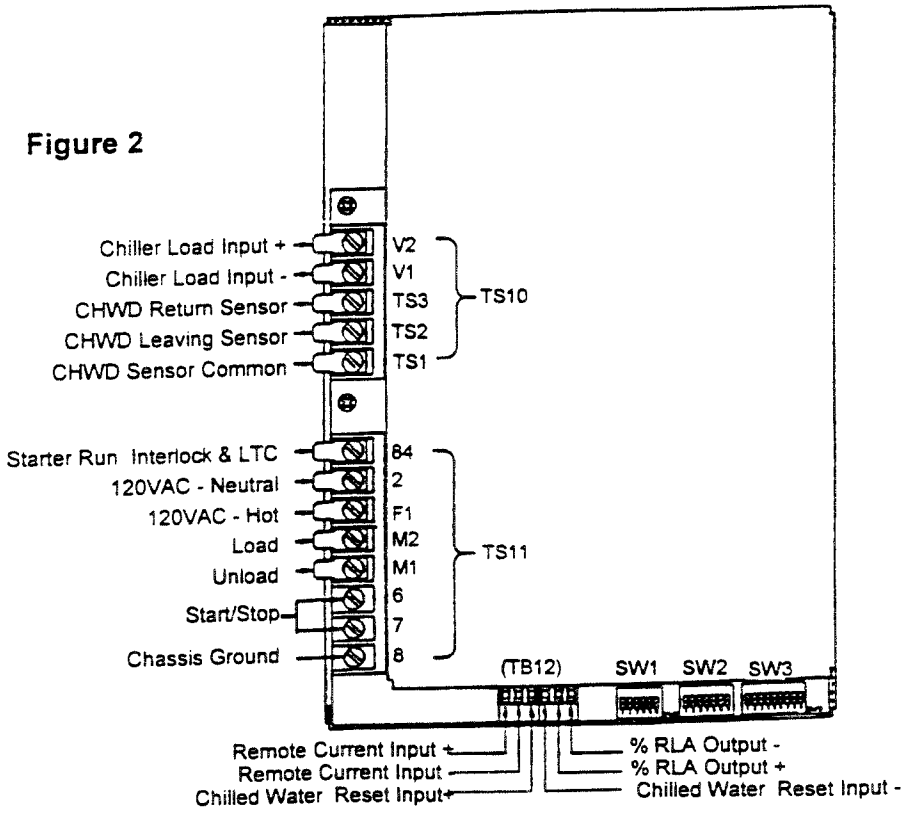

LEGEND

A1	Electronic Overload(In Starter)
A3	Compressor Vane Actuator
A8	Chilled Water Pump Overload
A9	Condenser Water Pump Overload
A12	Free Cooling Liquid Line Valve Actuator
A13	Free Cooling Gas Line Valve Actuator
A14	Hot Gas Bypass Valve Actuator
B1	Compressor Motor
B2	Oil Pump Motor
B3	Purge Compressor Motor
B1R1	Motor Temperature Sensors
B1R2	Motor Temperature Sensors
B1R3	Motor Temperature Sensors
C1	Oil Pump Start Capacitor
CB1	Low Oil Pressure Fault Indicator
CB2	High Condenser Pressure Fault Indicator
CB3	Low Refrigerant Temperature Fault Indicator
CB4	Hi Motor Temperature Fault Indicator
CB5	Starter Fault Indicator
CB10	Starter Main Circuit Breaker
DS1	"Safeties Satisfied" Indicator Light
DS2	"Cooling Required" Indicator Light
DS3	"Restart Time Elapsed" Indicator Light
DS4	"Chilled Water" Flow Indicator Light
DS5	"Condenser Water" Flow Indicator Light
DS6	"Oil Pump" Indicator Light

DS7	"System" Operating Indicator Light
F1	Control Power Fuse
F2	Oil Pump Fuse
F3	Oil Heater Fuse
F4	Purge Unit Fuse
HR1	Oil Sump Heater
HR2	Purge Oil Separator Heater
K1	Unit Compressor Motor Starter
K3	Low Oil Pressure Arming Circuit
K4	Condenser Pump Control Relay
K5	Start Oil Pump Timer/Jump out Start Inhibit Circuit
K6	How Oil Pressure Arming Circuit/Start S4 Timer Motor
K7	Prevent Voltage Feedback/Deenergize Start Counter/Starter Fault Arming Circuit
K8	Starter Fault Tripping Circuit
K9	Starter Fault Arming Circuit?S4 Timer Deenergized Circuit Automatic Purge Operation
K10	Start Pulse Signal/S4 Timer Deenergized Circuit
K11	Hi Motor Temp. Tripping Circuit
K12	Chilled Water Pump Starter
K13	Condenser Water Pump Starter
K14	Oil Pump Run on Manual Purge Circuit
K15	Oil Pump Starter Relay
K16	CVHE Electric Hot Gas Bypass Control Relay
L1	Purge Solenoid
M1	Hour Meter
M2	Start Counter

S1	High Cond. Press Switch
S2	Low Refrigerant Temp. Switch
S3	Start-Stop Chilled Water Demand Switch
S4	Antirecyle Timer
S5	Evap Flow Switch
S6	On-Off Switch
S7	Condenser Flow Swtich(Heat Recovery Cond. on CVAC)
S8	Oil Pressure Switch
S9	Oil Pump Post Lube Timer
S10	Oil Temp.(Heater) Switch
S11	Purge On-Off-Auto Switch
S13	Purge High Pressure Switch
S14	Purge Temp(Heater) Switch
S15	PE on CVHE Pneumatic Option
T1	Control Power Transformer
U1	Electronic Capacity Control Module
U2	High Motor Temperature Control
U3	Leaving Chilled Water Temp. Sensor
ZU3	Return Chilled Water Temp. Sensor

Control Settings

High Pressure Control(S1)	15 PSIG Cut Out 5 PSIG Differential
Low Refrigerant Control(S2)	Open on fall in refrigerant temp. First Stage 33°F Second Stage 31°F
Chilled Water Demand Control(S3)	As required
Oil Pressure Control(S8)	Cut in - 15 PSIG Cut out - 8 PSIG
Oil Temp. Control(S10)	Set Point 135°F Differential 5°F
Purge High Pressure Control(S13)	Cut out 30 PSIG Differential 10 PSIG
Purge Oil Separator Heater Control(S14)	Set Point 135°F Differential 8°F

Sequence of Operation for Typical Startup

Energize the chilled water pump starter K12(line 13).

Set switch S6(line 26) in the "auto" position.

Control power flows through the string of safety controls and safety lock-out contacts(line 16). If all safeties are satisfied, light DS1(line 20) will light. Power flows to the chilled water demand switch(line 26) whose temperature sensing element is located in the return water entering the chiller. Upon a rise in return water temperature, S3 closes energizing light DS2(line 20) and feeding power to timer contact S4. If 30 minutes or more have elapsed since the previous compressor start, timer contact S4(line 26) feeds power to light DS3(line 20). Power also flows through compressor inlet vane end switch A3(if vanes are closed), through relay K7 contacts(if compressor is off) to terminal 8. If chilled water flow is proven,power feeds through flow switch S5 to light DS4(line 20). Power also feeds through switch S6 energizing relay K4(line 19). K4 contacts (line 16) close to energize the condenser water pump starter, K13. If condenser water flow is proven,power feeds through flow switch S7(line 26) to light DS5(line 20) and also energizes relay K5(line 21). One set of K5 contacts(line 43) close energizing the oil pump timer S9. In 40 seconds, timer S9 contacts(line 44) close energizing the oil pump motor B2(line 45).

The oil pump has a capacitor start-induction run single phase motor. It utilizes a current sensitive relay K15(line 45)wired in series with the run winding to switch from start to run. When the oil pump motor is first started, it draws locked rotor current, this high current draw causes K15 to close its contact(line 45) energizing the start capacitor and start

winding of the motor to begin its rotation. When the motor is fully accelerated, the current draw drops causing K15(line 45) to open its contact(line 45) and drop out the start winding putting the motor in its run configuration.

When oil pressure is established, oil pressure switch S8(line 26) closes, lighting DS6(line 22) and energizing relay K6(line 23). One set of K6 SPDT contacts(lines 14 and 15) switch to energize K3(line 14). In turn K3 contacts(line 16) close arming the Low Oil Pressure circuit interrupter CB1 (line 14). A second K6 contact(line 35) closes energizing timer S4. In 25 seconds S4 contacts(line 34) close. Twenty five seconds later S4 contacts (line 28) close lighting DS7(line 28), energizing K9(line 26) and initiating a compressor start by energizing K1(line 29). One set of K1 "start" contacts (line 29), close to maintain power to the compressor starter. Simultaneously, a second K1 "start" contact(line 34) closes energizing K10. K10 contacts(line 32) close to maintain K10 energized for the duration of anti-recycle timer S4.

A third K10 contact(line 29) opens to interrupt the "start" signal through S4 contacts(line 26). Thus to original "start" signal through S4(line 26) is maintained only long enough to energize the "start" contactor of K1.

If K1 drops out for any reason, K1 stays de-energized until anti-recyle timer S4 competes its cycle. A third K1 'start" contact(line 45) closes to keep the oil pump energized as long as K1 contacts are closed.

When K1 connects the compressor in the run configuration, K1 "run" contacts (line 40) close feeding power to terminal 84 of the capacity control module U1(line 40) (if refrigerant temperature switch S2 is closed) thus allowing U1 to open the compressor inlet vanes as necessary.

When K1 is initially energized, relay K9(line 26) is also energized K9 contacts (line 25) open keeping relay K8 de-energized. This arms the Starter Fault safety circuit 15 seconds after the initial start pulse is sent to K1. S4 contacts(line 26) switch from 13-81 to 13-79, energizing relay K7(line 24). K7 contacts(line 25) close keeping K7 energized and completing the arming of the Starter Fault circuit. If K1 opens for any reason, contacts K1(line 29) open de-energizing relay K9. K9 contacts (line 25) close energizing relay K8. K8 contacts(line 15) close tripping safety lockout CB5 and locking the unit off. When there is no longer a call for cooling or if a safety opens, compressor starter K1 and relay K5 will be de-energized. A contact of timer S9(line 44) will keep timer S9 and oil pump motor B2 energized for 7 minutes to provide lubrication during compressor coast-down.

If there is a loss of oil pressure while the compressor is running, oil pressure switch S8(line 26) opens, stopping the compressor and de-energizing relay K6(line 23). Power then feeds from terminal 12(line 26) through contacts of K2(line 16) and NC contacts of K6(line 14) to trip safety lockout CB1, locking the compressor off.

Alarm contacts(line 56) are factory wired using NC contacts of the control safety lockouts. NO alarm contacts may be used by moving one wire on each safety lockout.

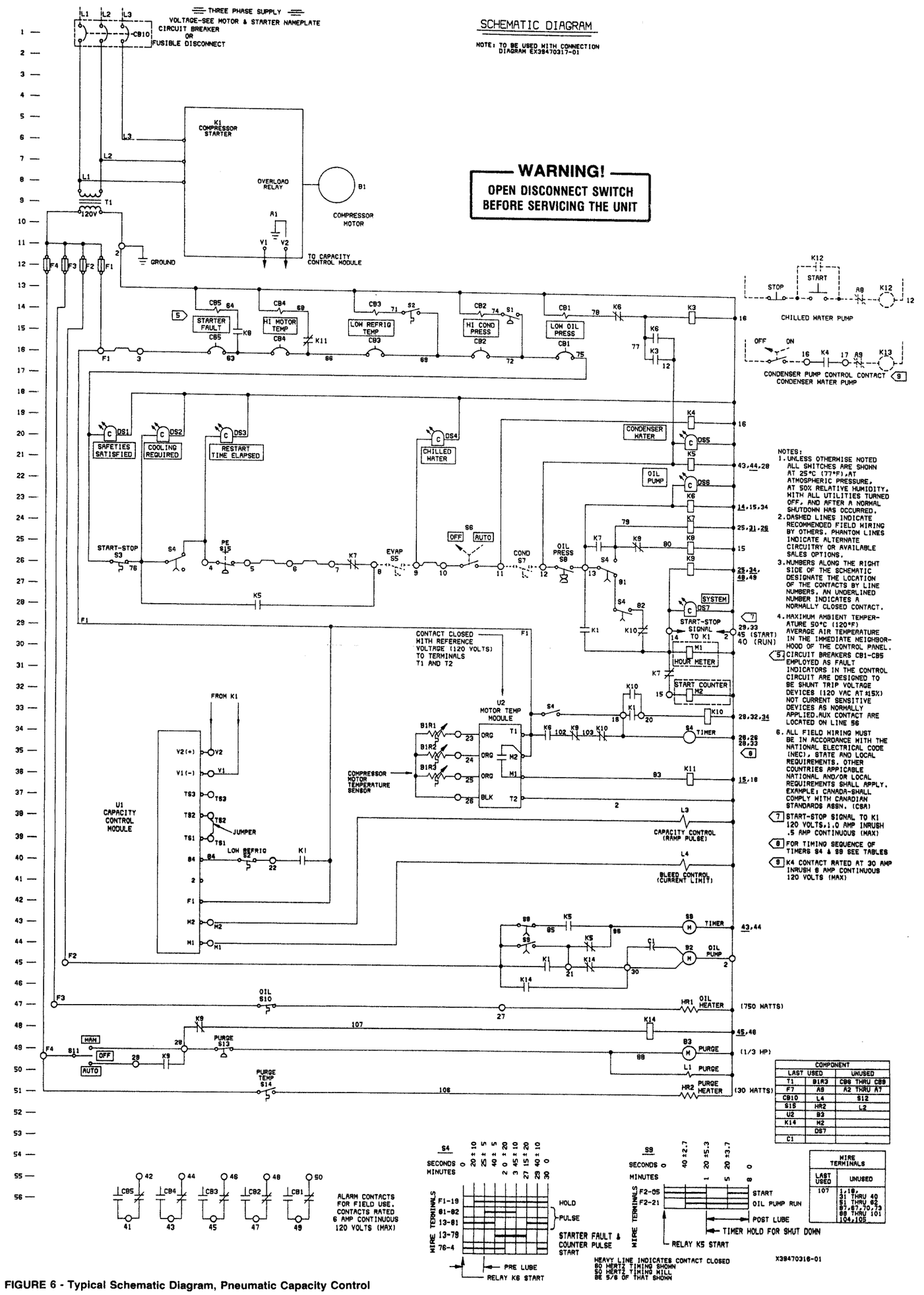

NOTES:
1. UNLESS OTHERWISE NOTED ALL SWITCHES ARE SHOWN AT 25°C (77°F), AT ATMOSPHERIC PRESSURE, AT 50% RELATIVE HUMIDITY, WITH ALL UTILITIES TURNED OFF, AND AFTER A NORMAL SHUTDOWN HAS OCCURRED.
2. DASHED LINES INDICATE RECOMMENDED FIELD WIRING BY OTHERS. PHANTOM LINES INDICATE ALTERNATE CIRCUITRY OR AVAILABLE SALES OPTIONS.
3. NUMBERS ALONG THE RIGHT SIDE OF THE SCHEMATIC DESIGNATE THE LOCATION OF THE CONTACTS BY LINE NUMBERS. AN UNDERLINED NUMBER INDICATES A NORMALLY CLOSED CONTACT.
4. MAXIMUM AMBIENT TEMPERATURE 50°C (120°F) AVERAGE AIR TEMPERATURE IN THE IMMEDIATE NEIGHBORHOOD OF THE CONTROL PANEL.
5. CIRCUIT BREAKERS CB1-CB5 EMPLOYED AS FAULT INDICATORS IN THE CONTROL CIRCUIT ARE DESIGNED TO BE SHUNT TRIP VOLTAGE DEVICES (120 VAC AT ±15%) NOT CURRENT SENSITIVE DEVICES AS NORMALLY APPLIED. AUX CONTACT ARE LOCATED ON LINE 96
6. ALL FIELD WIRING MUST BE IN ACCORDANCE WITH THE NATIONAL ELECTRICAL CODE (NEC), STATE AND LOCAL REQUIREMENTS. OTHER COUNTRIES APPICABLE NATIONAL AND/OR LOCAL REQUIREMENTS SHALL APPLY. EXAMPLE: CANADA-SHALL COMPLY WITH CANADIAN STANDARDS ASSN. (CSA)
7. START-STOP SIGNAL TO K1 120 VOLTS, 1.0 AMP INRUSH .5 AMP CONTINUOUS (MAX)
8. FOR TIMING SEQUENCE OF TIMERS S4 & S9 SEE TABLES
9. K4 CONTACT RATED AT 30 AMP INRUSH 6 AMP CONTINUOUS 120 VOLTS (MAX)

COMPONENT	
LAST USED	UNUSED
T1	B1R3
F7	A8
CB10	L4
S15	HR2
U2	B3
K14	M2
	DS7
C1	

WIRE TERMINALS	
LAST USED	UNUSED
107	1,10, 31 THRU 40 51 THRU 62 67,67,70,73 88 THRU 101 104,105

FIGURE 6 - Typical Schematic Diagram, Pneumatic Capacity Control

CVHE ELECTRIC VANE MOTOR

The electric vane actuator used on the CVHB and CVHE Model CenTraVacs is a worm gear type linear actuator. It is driven by a reversable electric motor and requires approximately 60 seconds to go full stroke when given constant power.

The vane actuator utilizes a limit switch mechanism to limit the travel of the actuator and provide a signal to the control panel that the vanes are completely closed. Figure 1 is a picture of the vane motor terminal box showing the terminal strip, capacitor and limit switch mechanism.

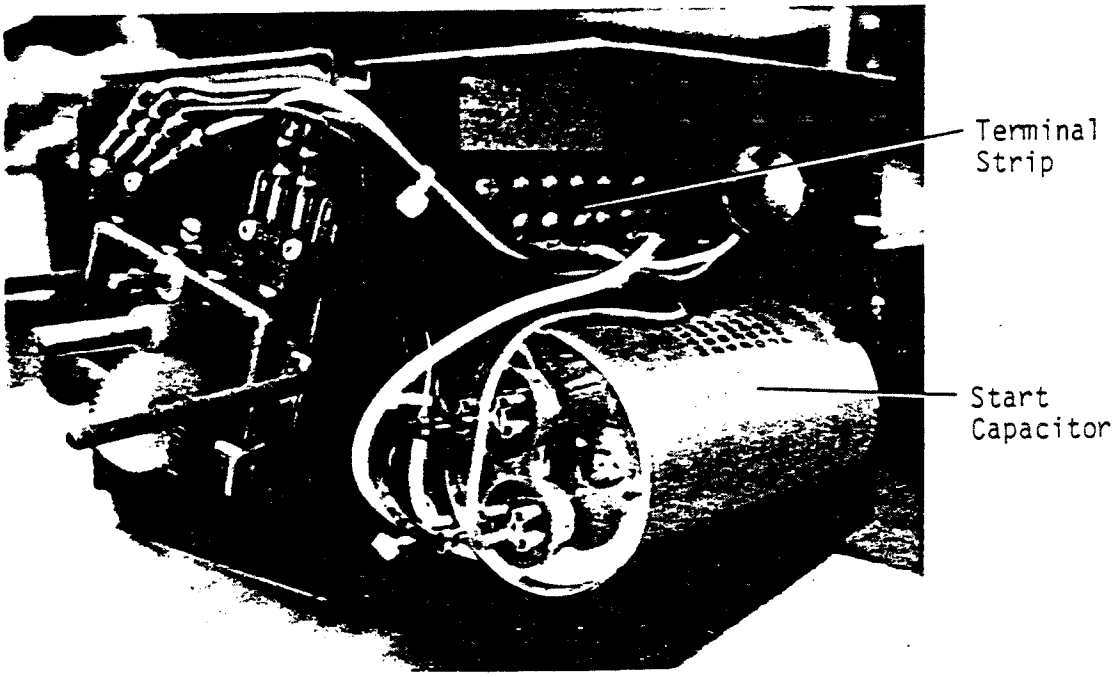

Figure 1: Electric Vane Motor Terminal Box

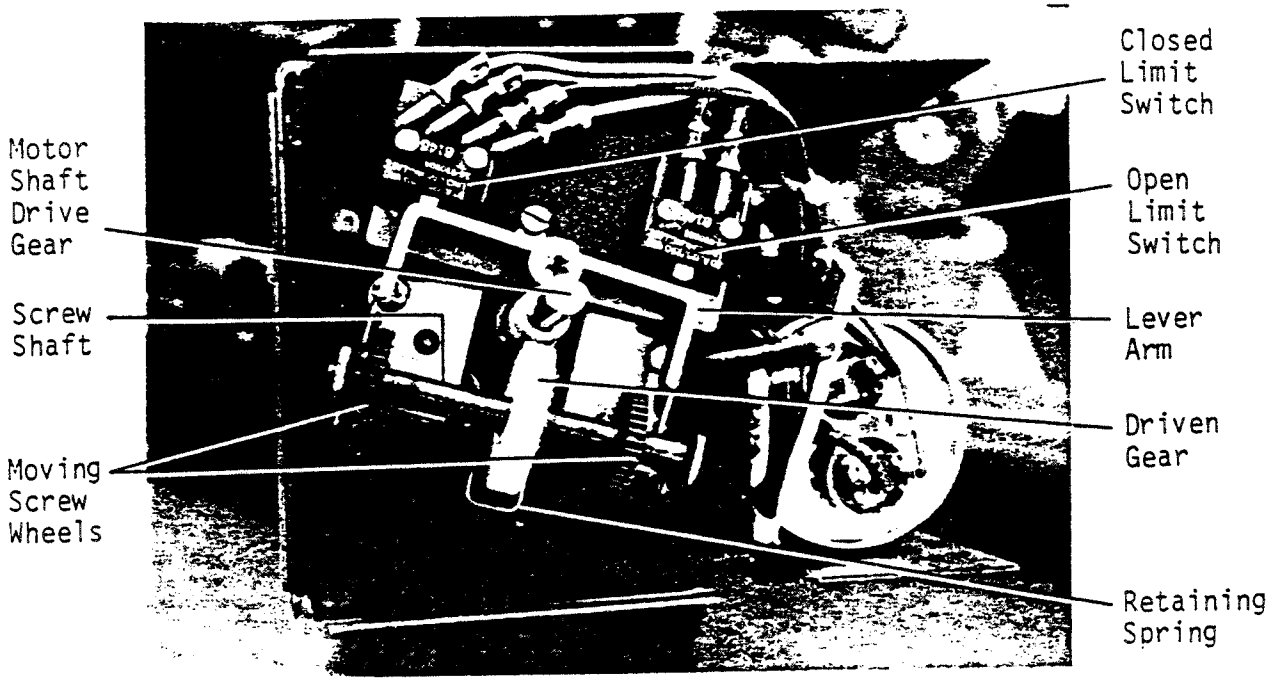

Figure 2: Limit Switch Mechanism

Limit Switch Operation

The limit switch mechanism operates as follows:

A worm drive gear is mounted on the end of the motor shaft(See Figure 2). As the motor turns the worm gear drives a screw shaft through another gear. As the screw shaft turns two moving screw wheels move back and forth on the shaft(See Figure 3). These screw wheels do not turn, they are kept from turning by a retaining spring. Their internal threading to the screw shaft is what causes them to move back and forth on the shaft. The moving screw wheels push a lever arm which in trun actuates a "full open" limit switch or "full closed" limit switch depending on the position of the actuator. (See Figure 2).

The full open limit switch breaks the open signal to the vane motor preventing it from over driving and jamming the van actuator.

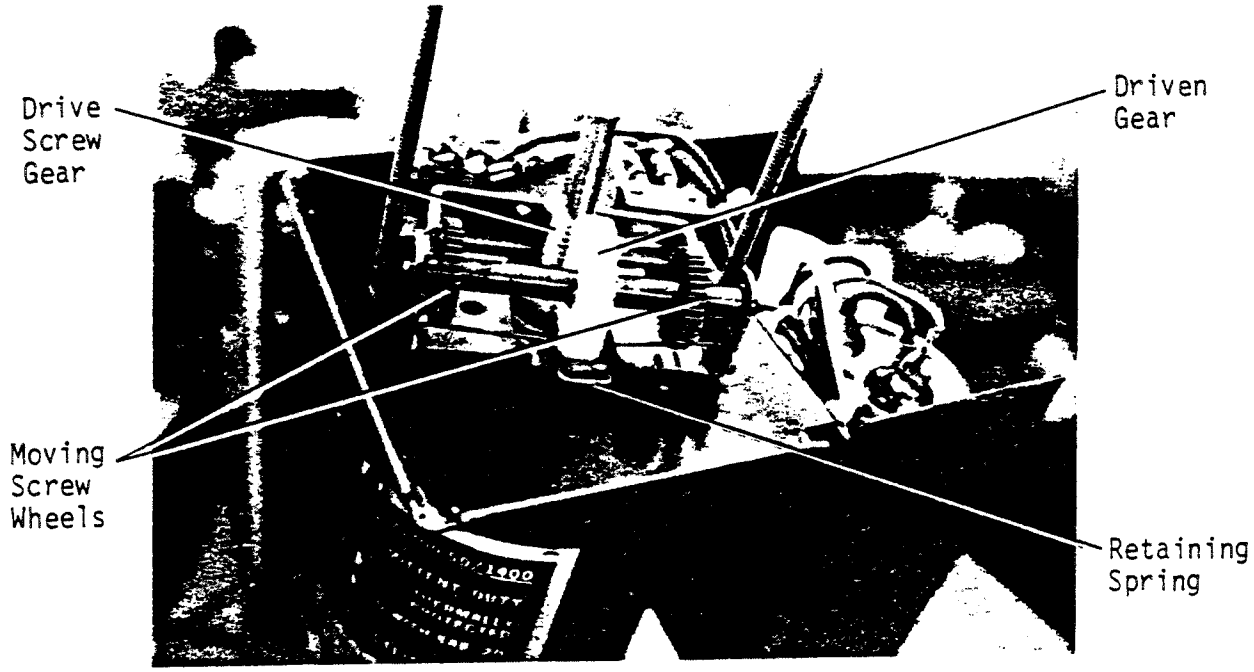

Figure 3: Limit Switch Mechanism

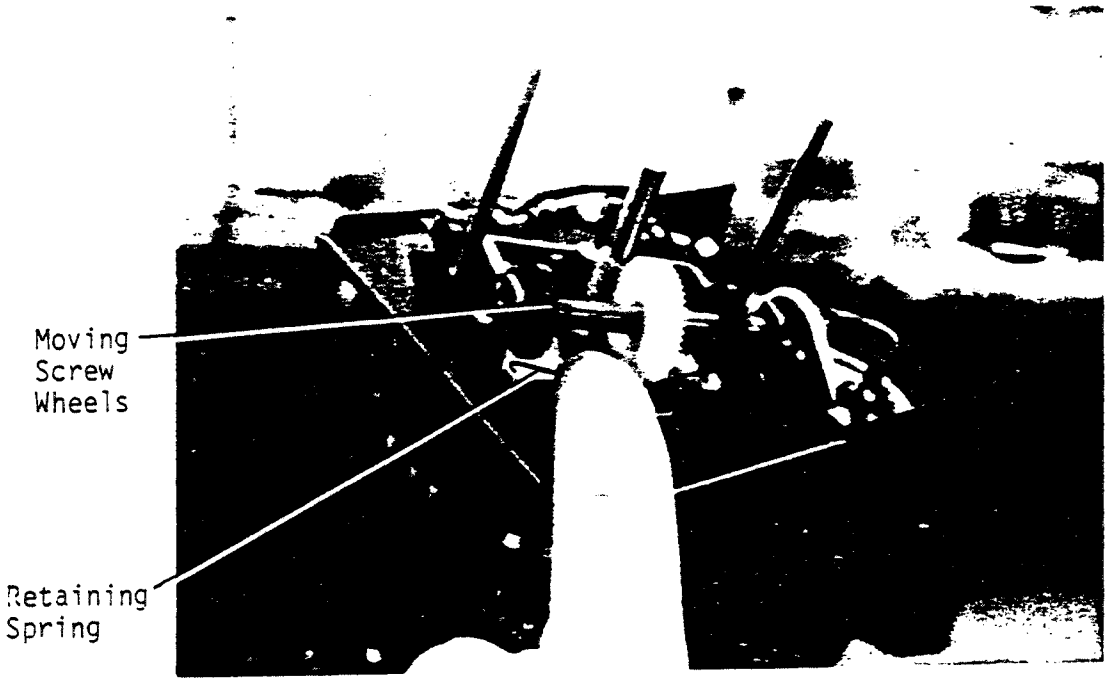

Figure 4: Limit Switch Mechanism Retaining Spring

The full closed limit switch breaks the close signal to the vane motor preventing it from overdriving and jamming the vane actuator shut. It also makes

a set of contacts which complete the control circuit allowing a start to occur(See Figure 5).

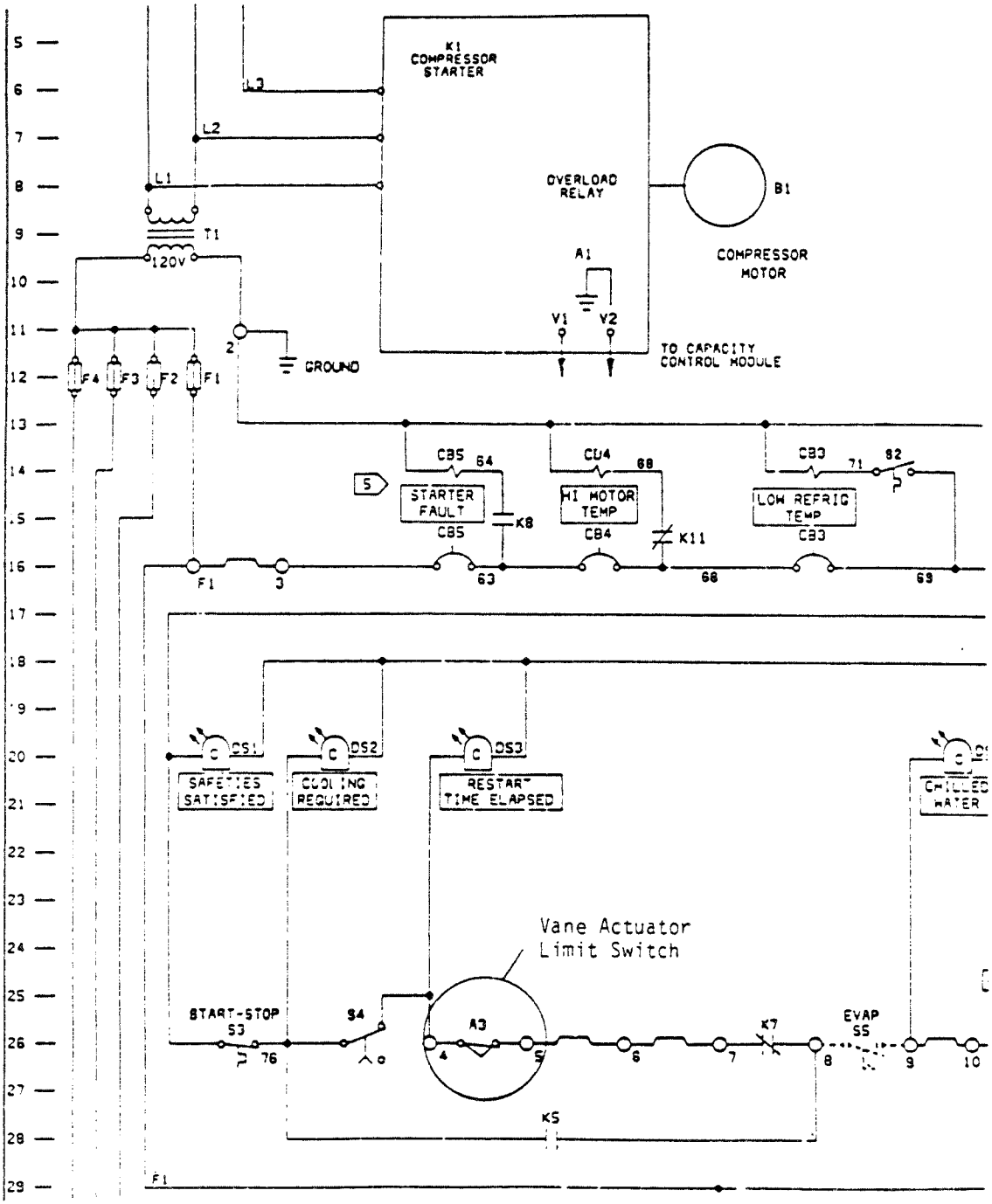

Figure 5: CVHE Schematic Diagram

Limit Switch Adjustment

To adjust the limit switch make and break points the retaining spring must be pushed down so that it disengages the moving screw wheel.(See Figure 4). The screw wheel may then be rotated as required to adjust the limit switches. These switches should be set so that the power to the motor is broken approximately 1/8 to 1/4 inch before the actuator is completely retracted or extended. If the limit switches are not properly adjusted, the vane motor may continue to be powered in the fully retracted or extended position causing the motor to heat up and cycle on its thermal overload and ultimately fail.

Maintenance

Every six months a few drops of light machine oil(SAE-20) should be applied to the vane operator shaft and spread into a light film. This will protect the shaft from moisture and rust.

The actuator motor bearings must also be lubricated by inserting a long nozzle into the lubrication points on the actuator as shown in Figure 6. Several drops of SAE-20 oil is sufficient.

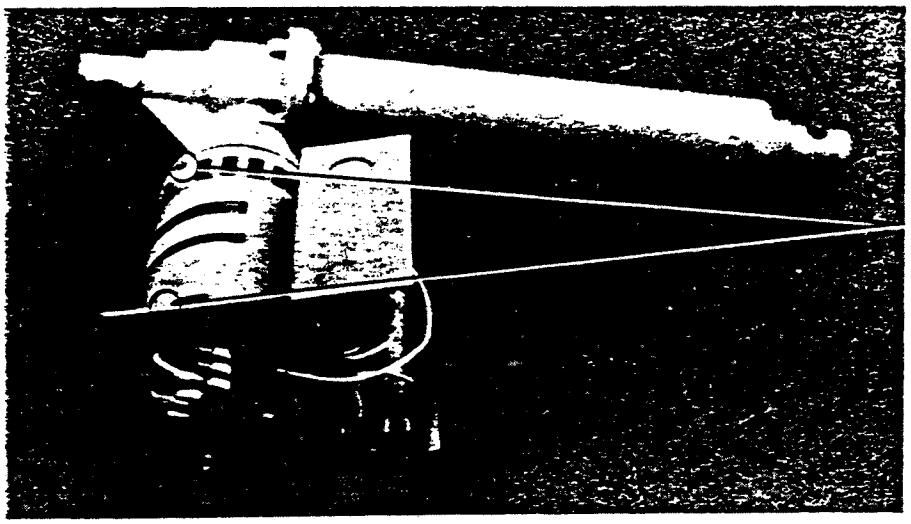

Figure 6: Compressor Inland Vane Actuator Motor

4

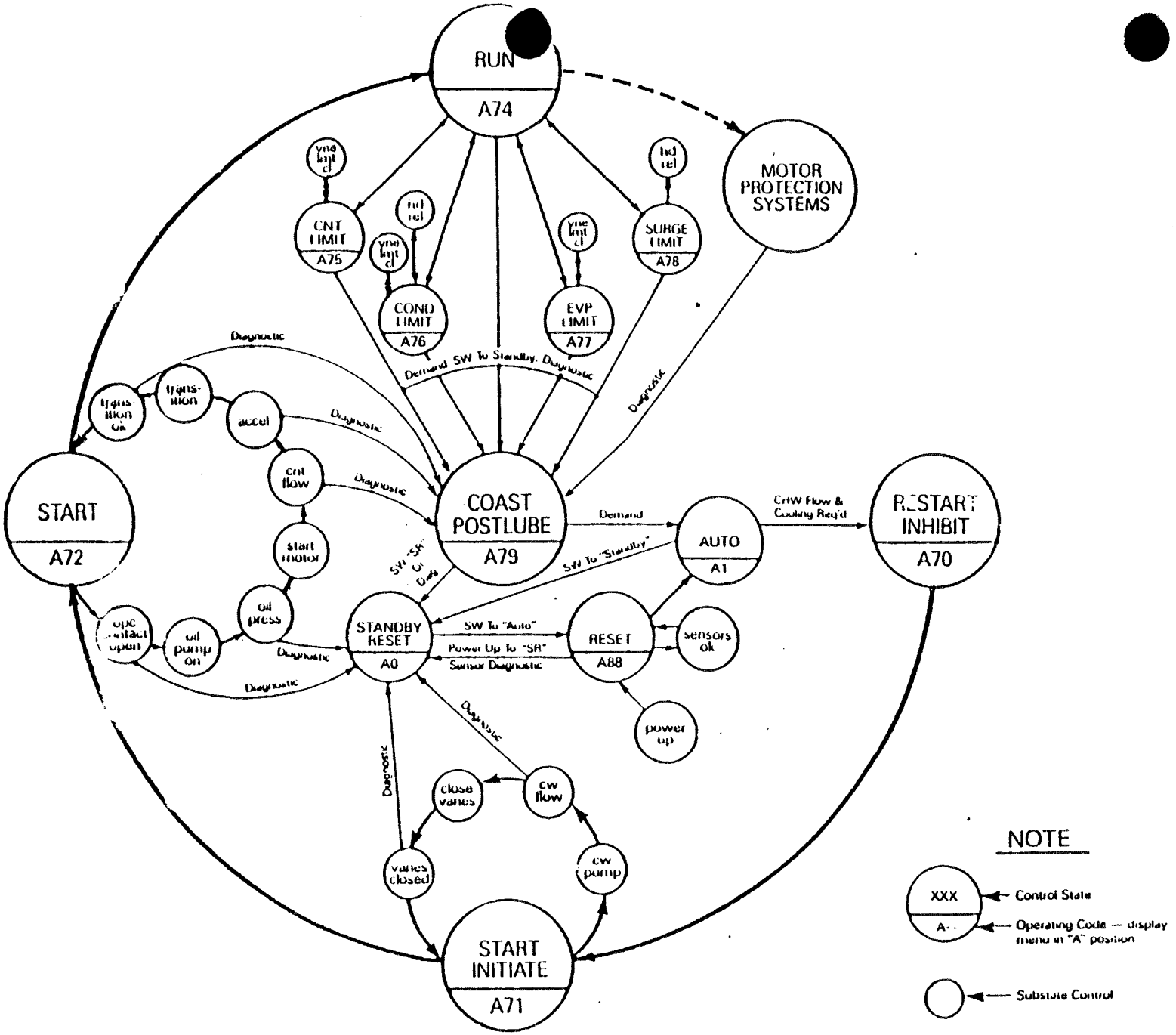
RUN
A74
MOTOR PROTECTION SYSTEMS
CNT LIMIT
A75
COND LIMIT
A76
EVP LIMIT
A77
SURGE LIMIT
A78
yne lmt cl
hd rel
Demand SW To Standby, Diagnostic
Diagnostic
START
A72
trans-ition ok
trans-ition
accel
cnt flow
start motor
oil press
oil pump on
opc contact open
COAST POSTLUBE
A79
Demand
AUTO
A1
CHW Flow & Cooling Req'd
RESTART INHIBIT
A70
SW To "Standby"
SW "SR" Or Diag
STANDBY RESET
A0
SW To "Auto"
Power Up To "SR"
Sensor Diagnostic
RESET
A88
sensors ok
power up
cw flow
close vanes
vanes closed
cw pump
START INITIATE
A71
NOTE
XXX
A--
Control State
Operating Code — display menu in "A" position
Substate Control

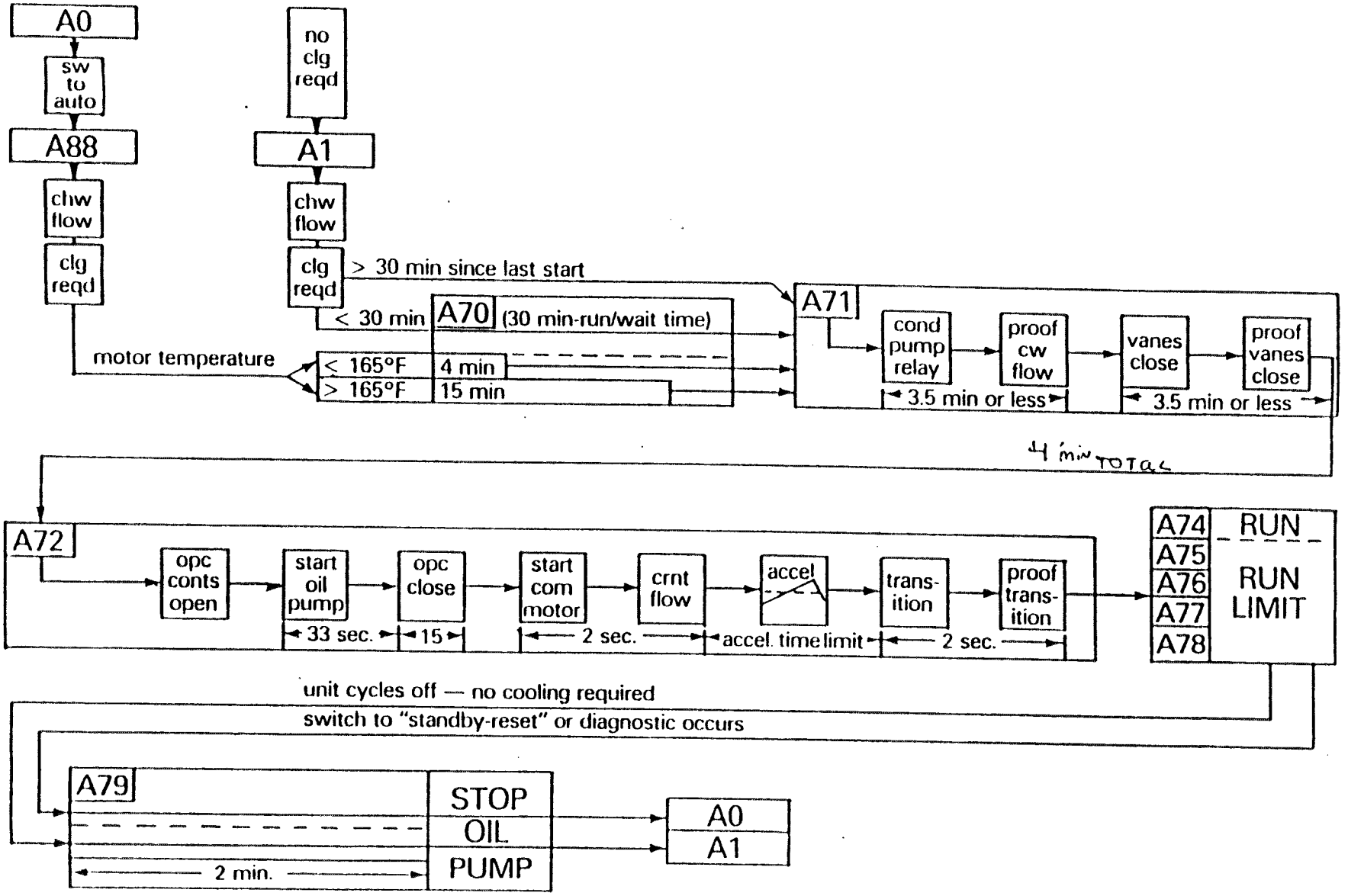
A0
sw to auto
A88
chw flow
clg reqd
no clg reqd
A1
chw flow
clg reqd
> 30 min since last start
< 30 min
A70
(30 min-run/wait time)
motor temperature
< 165°F
4 min
> 165°F
15 min
A71
cond pump relay
proof cw flow
3.5 min or less
vanes close
3.5 min or less
proof vanes close
4 min TOTAL
A72
opc conts open
start oil pump
33 sec.
opc close
15
start com motor
2 sec.
crnt flow
accel
accel. time limit
trans-ition
2 sec.
proof trans-ition
A74
A75
A76
A77
A78
RUN
RUN LIMIT
unit cycles off — no cooling required
switch to "standby-reset" or diagnostic occurs
A79
STOP
OIL
PUMP
2 min.
A0
A1

TRANE UCP 695 TEST POINTS

RIBBON CONNECTOR 1P4 FOR 102 MODULE		
Terminal 1	Transition Off Transition On	0.0 TO 0.1 VDC 0.85 TO 1.6 VDC
Terminal 2	Oil Heater Off Oil Heater On	0.0 TO 0.1 VDC 0.85 TO 1.6 VDC
Terminal 3	Start Off Start On	0.0 TO 0.1 VDC 0.85 TO 1.6 VDC
Terminal 4	Oil Pump Off Oil Pump On	0.0 TO 0.1 VDC 0.85 TO 1.6 VDC
Terminal 5	Overload Off Overload On	0.0 TO 0.1 VDC 0.85 TO 1.6 VDC
Terminal 6	HPC Normal HPC Tripped	0.0 TO 0.7 VDC 6.0 TO 22.5 VDC
Terminal 7	Stop Relay Off Stop Relay On	0.0 TO 0.1 VDC 0.85 TO 1.6 VDC
Terminal 8	Reset Relay Off Reset Relay On	0.0 TO 0.1 VDC 1.0 TO 1.8 VDC
Terminal 9	Not Used	
Terminal 10	Filament Voltage	-23.0 TO -11.9 VDC 3.3 TO 4.1 VAC *
Terminal 11	Ref. for 1P4-10	
Terminal 12	-23 Volt Supply	-28.0 TO -18.9 VDC
Terminal 13	+12 Volt Supply	13.7 TO 22.5 VDC
Terminal 14	+12 Volt Ground	
Terminal 15	Not Used	
Terminal 16	+12 V Unfiltered	6.9 TO 16.8 VDC
Terminal 17	+8 Volt Ground	
Terminal 18	+8 Volt Supply	8.5 TO 13.0 VDC
Terminal 19	-8 Volt Supply	-13.5 TO -8.5 VDC
Terminal 20	+5 Volt Supply	5.34 TO 5.66 VDC
Terminal 21	+5 Volt Ground	

NOTE: 1) UNLESS OTHERWISE INDICATED ALL VOLTAGES ARE MEASURED TO 1P4-14
2) " * " INDICATES THIS VALUE IS MEASURED WITH RESPECT TO 1P4-11

TRANE UCP 695 TEST POINTS

RIBBON CONNECTOR 1P3 FOR 1U1 MODULE		
Terminal 1	Close Vanes Off Close Vanes On	0.0 TO 0.06 VDC 5.1 TO 5.6 VDC
Terminal 2	Open Vanes Off Open Vanes On	0.0 TO 0.06 VDC 5.1 TO 5.6 VDC
Terminal 3	Condenser Pump Off Condenser Pump On	0.0 TO 0.1 VDC 0.85 TO 1.6 VDC
Terminal 4	Purge Off Purge On	0.0 TO 0.1 VDC 0.85 TO 1.6 VDC
Terminal 5	Not Used	
Terminal 6	Alarm Off Alarm On	0.0 TO 0.1 VDC 0.85 TO 1.6 VDC
Terminal 7	Head Relief Off Head Relief On	0.0 TO 0.1 VDC 0.85 TO 1.6 VDC
Terminal 8	Free Cool Aux Off Free Cool Aux On	0.0 TO 0.1 VDC 0.85 TO 1.6 VDC
Terminal 9	Free Cool Valve Off Free Cool valve On	0.0 TO 0.1 VDC 0.85 TO 1.6 VDC
Terminal 10	Relay Supply	13.7 TO 22.5 VDC
Terminal 11	Ground	

NOTE: 1) ALL VOLTAGES ARE MEASURED WITH RESPECT TO 1P3-11
2) VANE CONTROL OUTPUTS ARE TRIAC CONTROLLED AND MUST BE "LOADED" TO TO ATTAIN PROPER MEASUREMENT

TRANE UCP 695 TEST POINTS

DC VOLTS FOR CONNECTOR 1P1 FROM TRANSFORMER		
Terminal 1	Chassis Ground	
Terminal 3	FIL 2 (DC Offset)	-23.0 TO -11.9 VDC
Terminal 4	FIL 1 (DC Offset)	-23.0 TO -11.9 VDC
Terminal 5	XFMR FIL (DC Offset)	-23.0 TO -11.9 VDC

NOTE: ALL VOLTAGES ARE MEASURED WITH RESPECT TO 1P1-1

AC VOLTAGES FOR 1P1 FROM TRANSFORMER		
Terminal 1	Chassis Ground	
Terminal 2	XFMR (Chassis Common)	0.0
Terminal 3	FIL 2 (AC Component)	1.46 TO 2.04 VAC
Terminal 4	FIL 1 (AC Component)	1.46 TO 2.04 VAC
Terminal 6	XFMR -24 Output	14.2 TO 19.95 VAC
Terminal 7	Ref for 1P1-9 & 10	
Terminal 8	XFMR +12 Output	11.6 TO 16.9 VAC *
Terminal 9	Not Used	
Terminal 10	XFMR +5 Output	7.1 TO 10.5 VAC *

NOTE: 1) UNLESS OTHERWISE INDICATED ALL VOLTAGES ARE MEASURED TO 1P1-1
2) " * " INDICATES THIS VALUE IS MEASURED WITH RESPECT TO 1P1-7

TRANE UCP 695

ECWT & LCWT Sensors

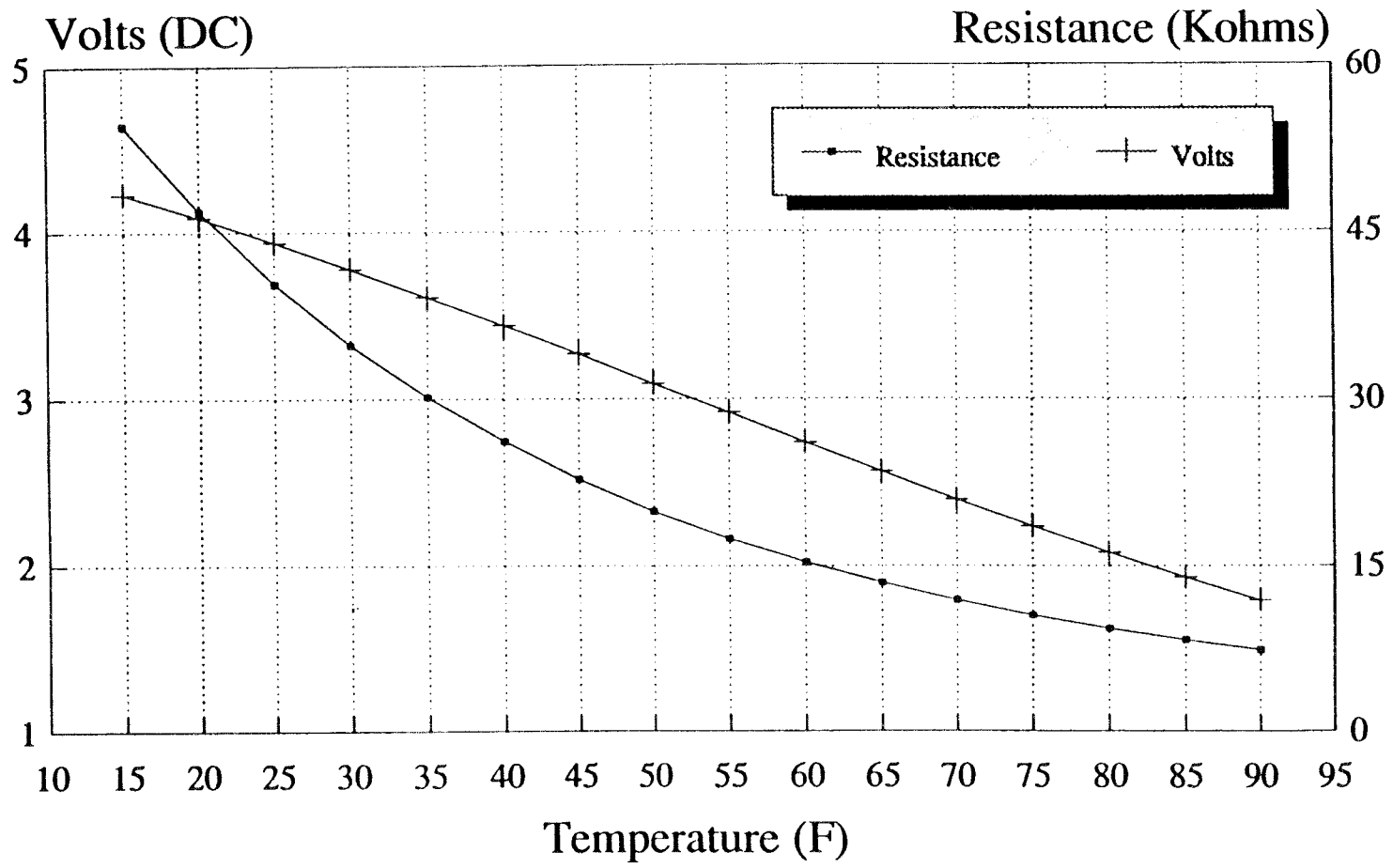

ECWT = 4RT1 ... LCWT = 4RT2

TRANE UCP 695

ECDWT & LCDWT Sensors

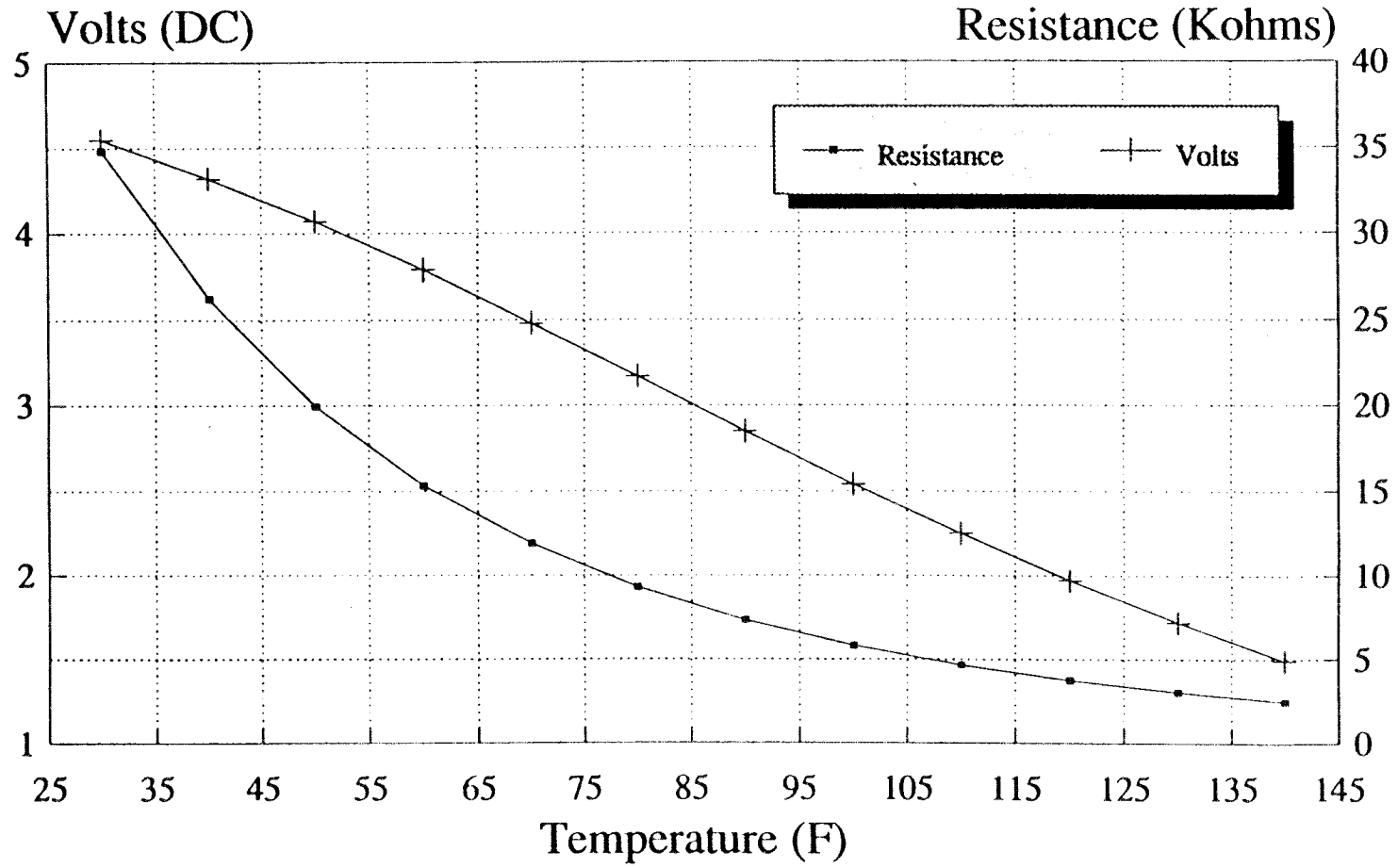

ECDWT = 4RT3 ... LCDWT = 4RT4

TRANE UCP 695

Evap Refrig Sensor

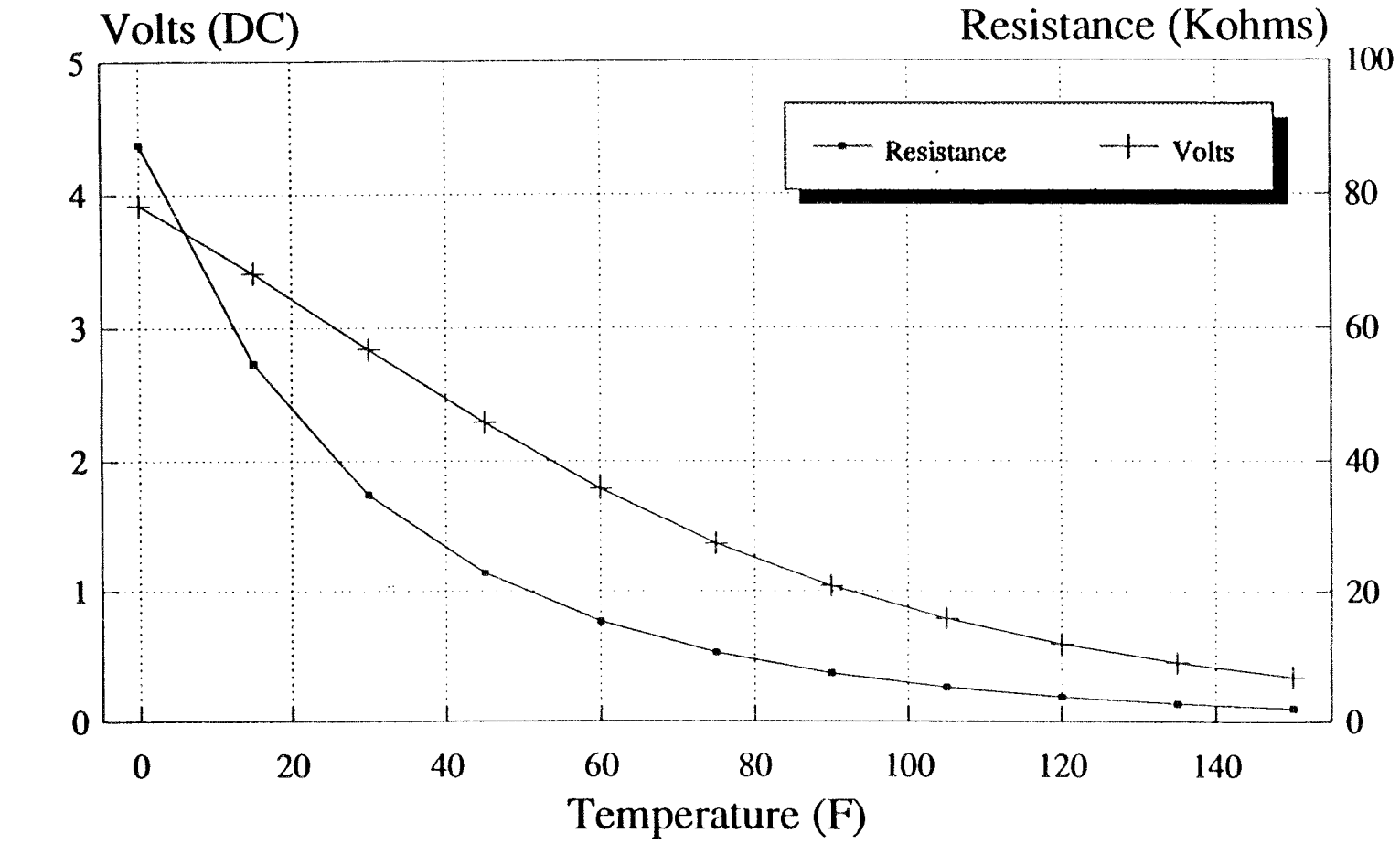

4RT5

TRANE UCP 695

Ambient Sensor

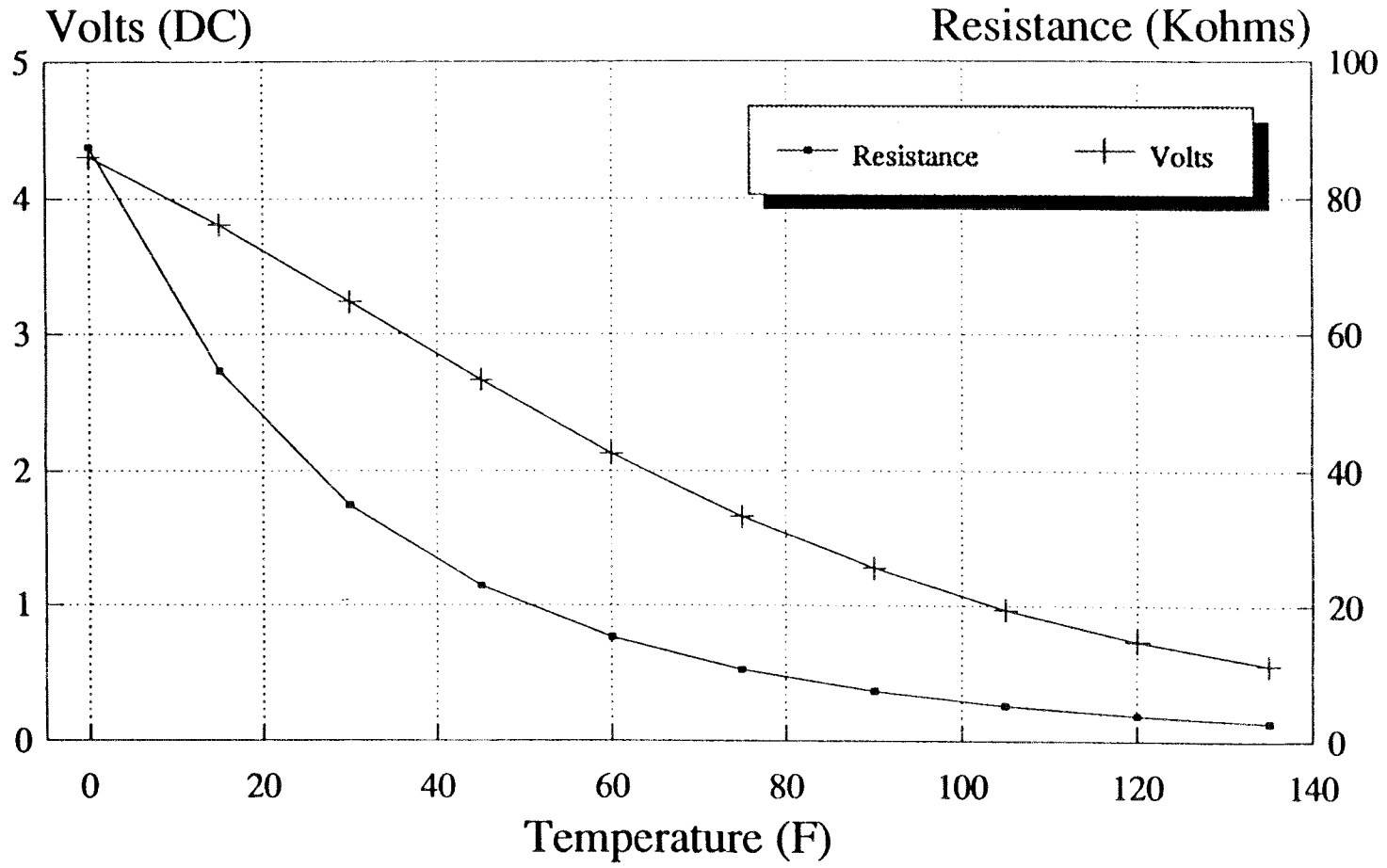

4RT6

TRANE UCP 695

Discharge, Oil & Bearing Sensors

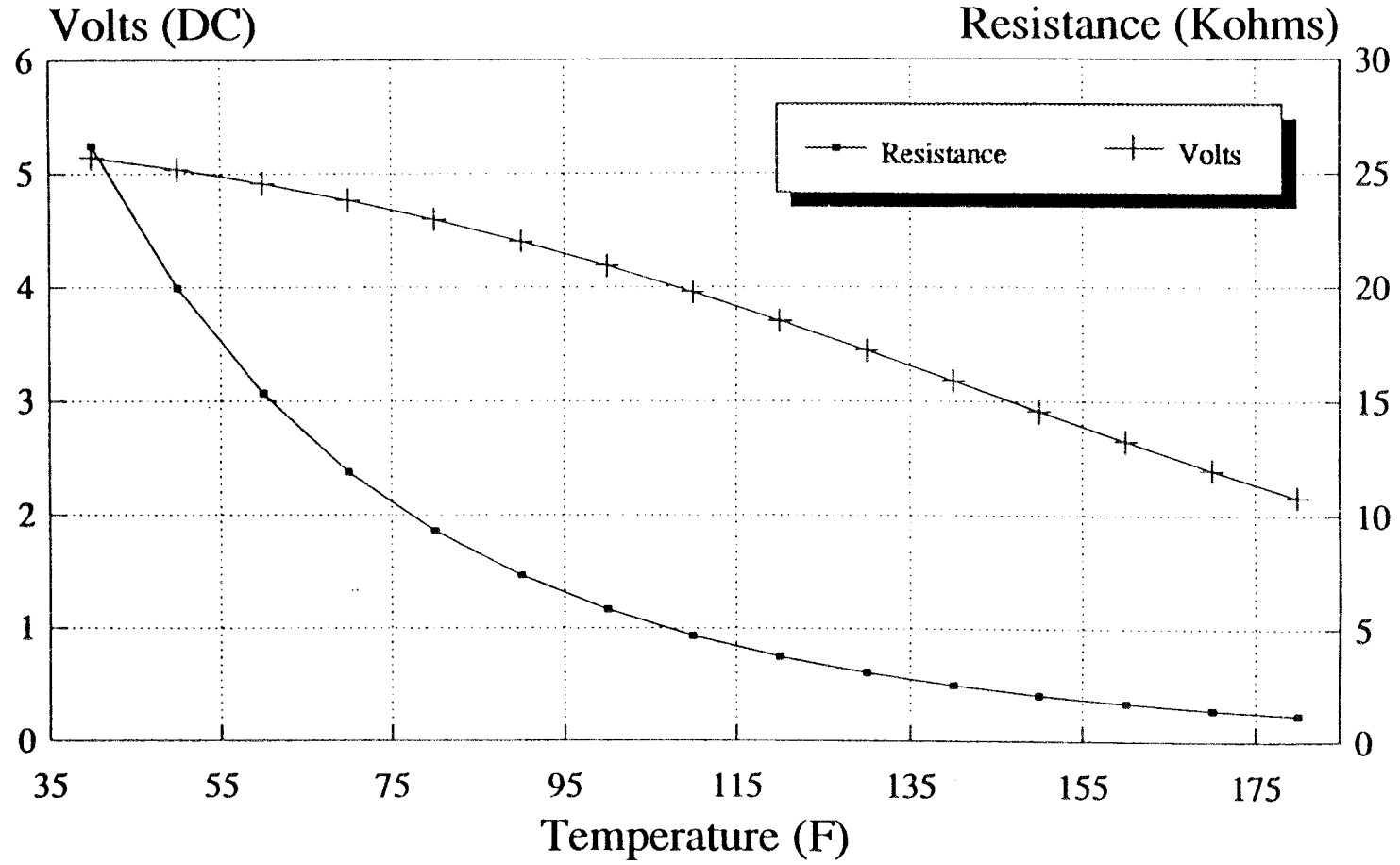

Oil=4RT7 .. Disch=4RT8 .. Bearing=4RT8/9

TRANE UCP 695

Motor Winding Sensors

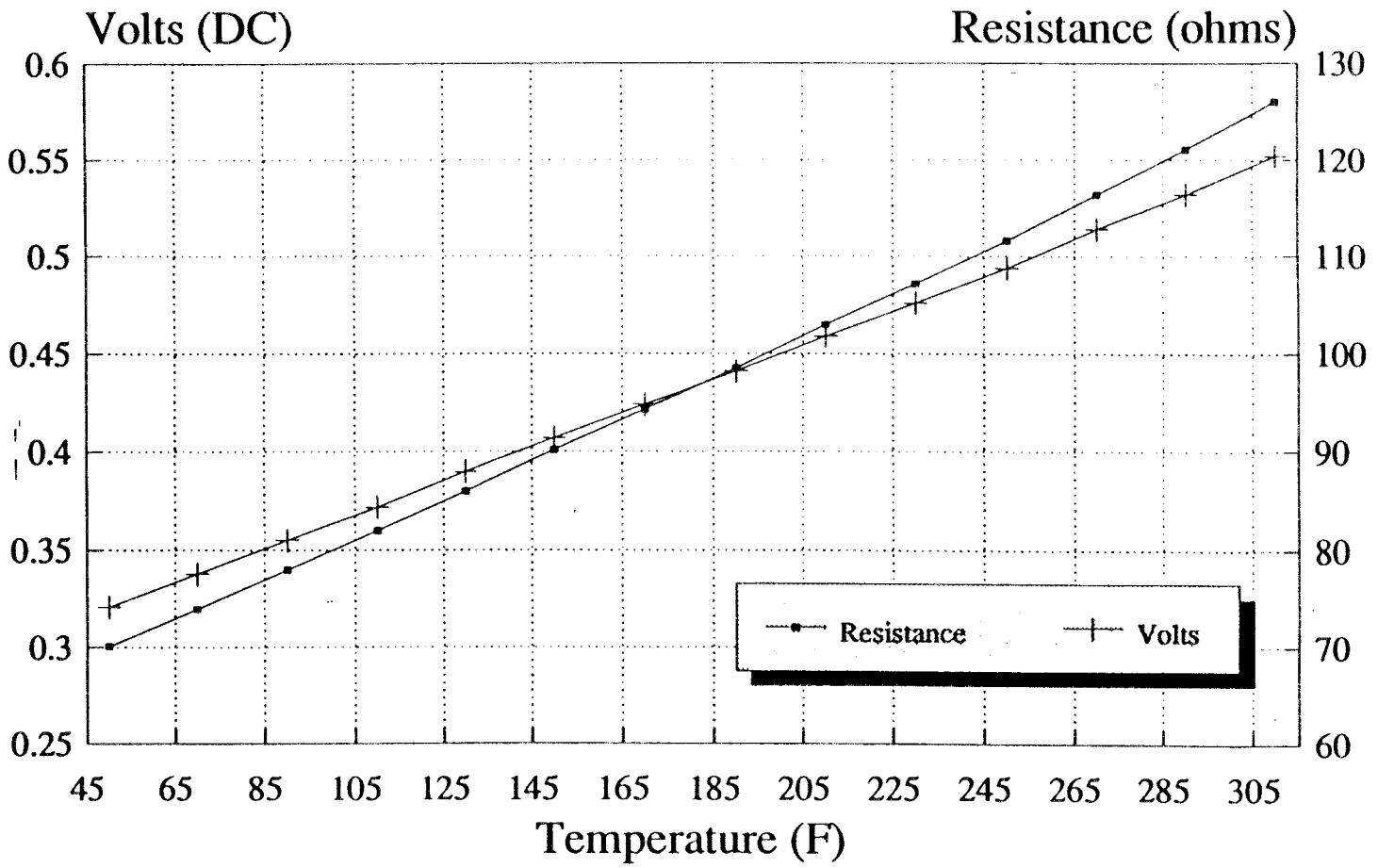

4B1R2, 4B1R3, 4B1R4

TRANE SCP 699

Sensor Characteristics

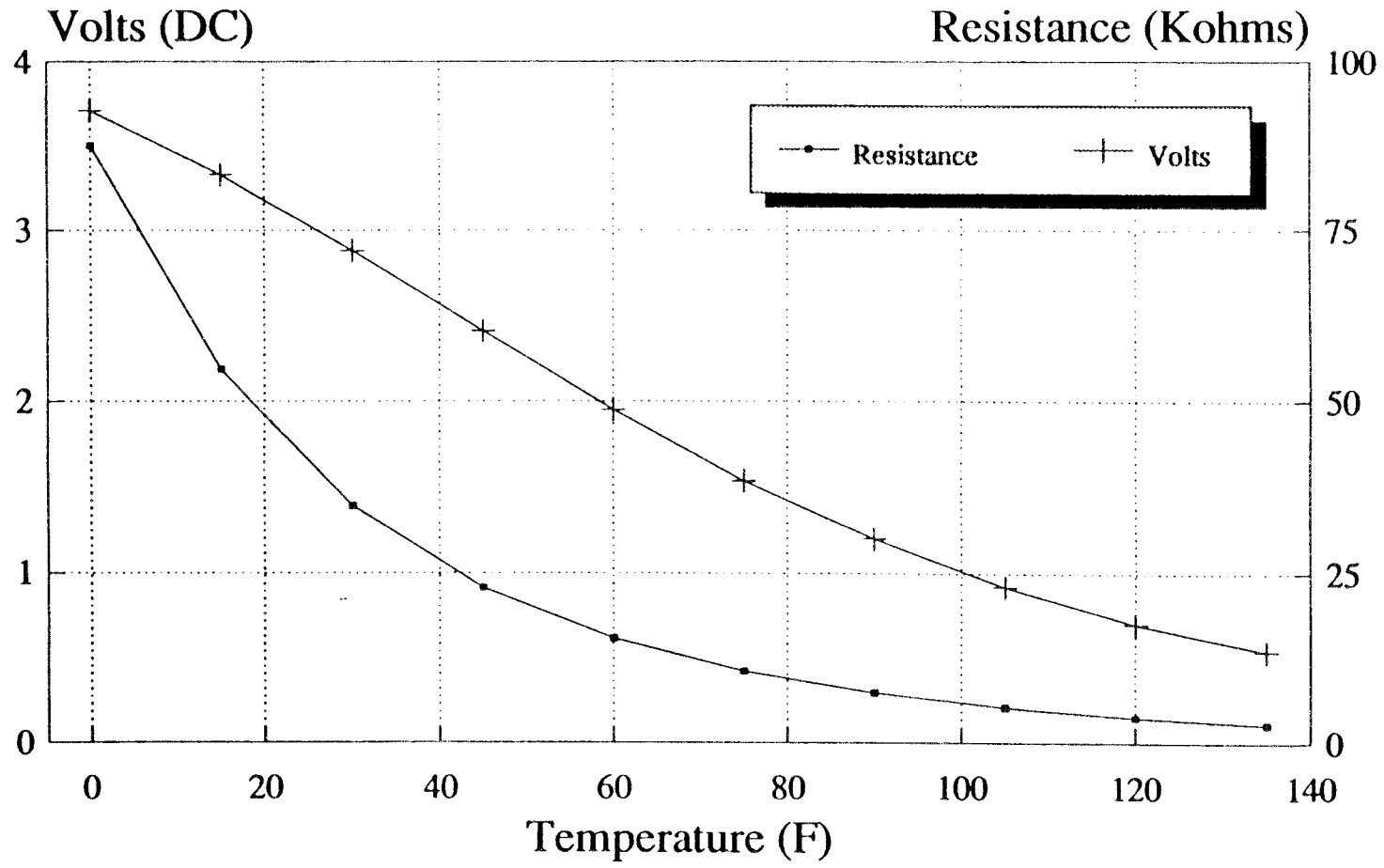

SCP

TRANE®

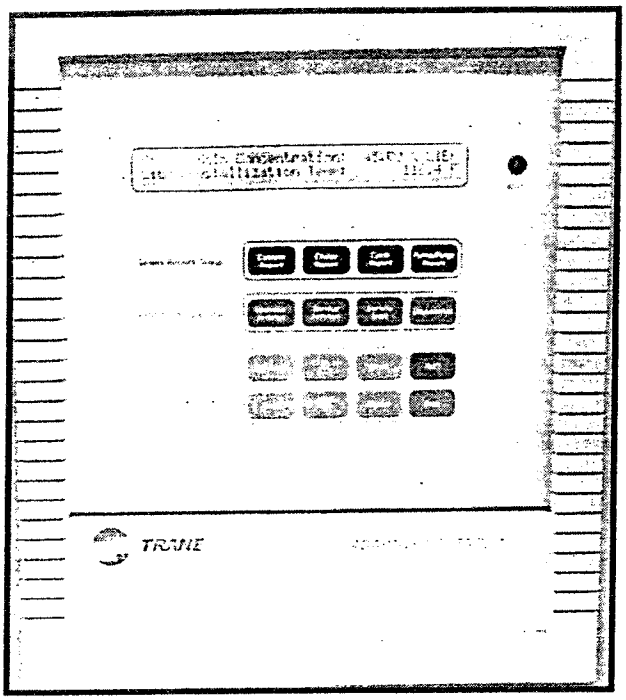

CenTraVac

Controls

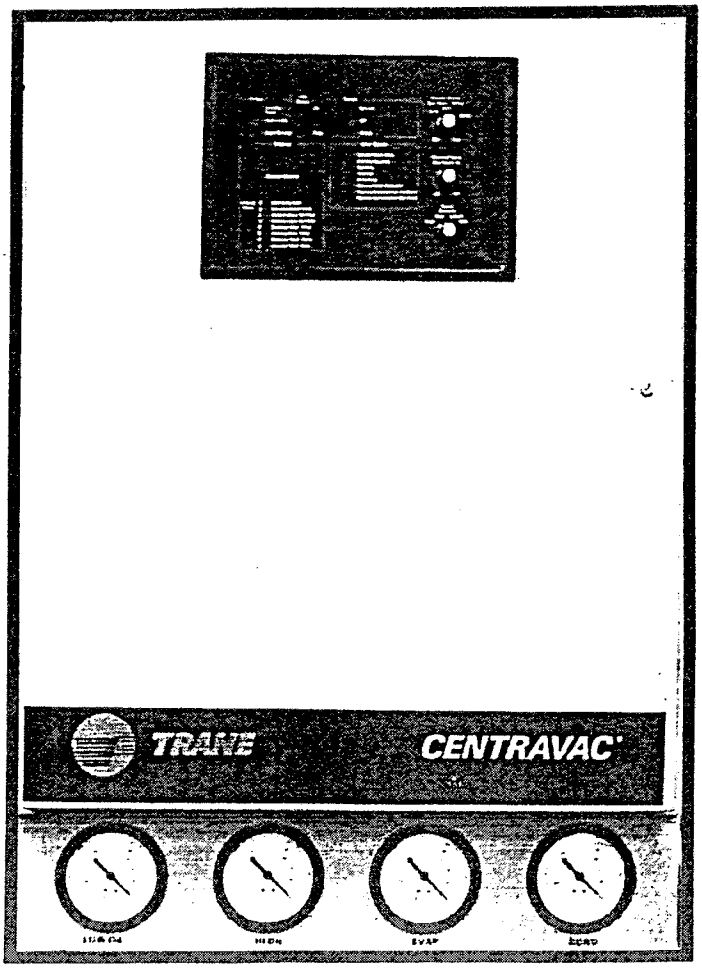

CVHE - UCP-1

UCP - 695

CVHE - UCP-1

- Up to 4 Modules
  - Relay Output Module (1U1)
  - Power Supply Output Module (1U2)
  - Micro Module (1U3)
  - Remote Generic BAS CWR Interface Module (1U4) (Optional)

CVHE - UCP-1

- Micro Module (1U3)
- "Brains" of the System
- Accepts Inputs from:
  - Power Supply Output Module (1U2) via 1TB2/1P4
  - 1TB3 & 1TB4 (Analog and Binary)
  - System Control Panel (SCP) (Optional) via 1TB6
- Provides Outputs to:
  - Control Chilled Water Temperature
  - Monitor Key Chiller Operating Parameters
  - Provide Compressor/Motor Protection
  - Execute the Start Sequence
- 3 Types of Panels Available
  - Standard (No External Comm Link)
  - Standard with Chilled Water Reset (Link to 1U4 for Generic BAS)
  - Standard with External Comm Link

Main Control Panel

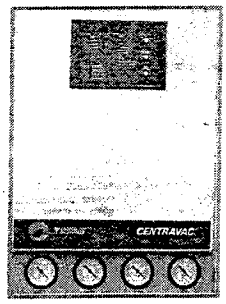

Standard Micro Module 1U3

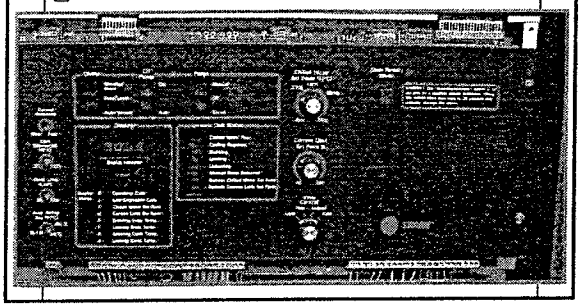

Panel Gauges

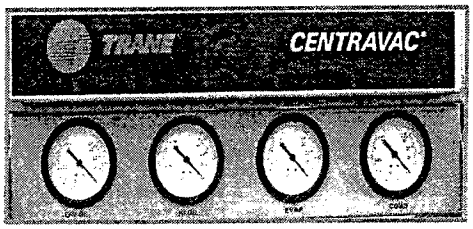

Pressure Gauges

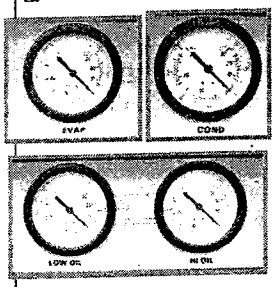

- *Evaporator*
- *Condenser*
- *Oil Pressure*
  - *Net Oil Pressure Is Determined by Subtracting Low From High*
  - *Low Oil & Evaporator Pressures Should be Within 4" of Each Other*

Start Counter & Hour Meter

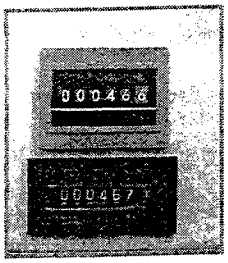

- *Should be Included on Log Sheet*
- *Can Help Determine Short Cycling*

Discharge Pressure Transducer

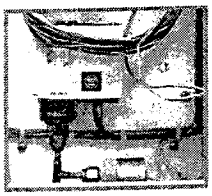

- *Inputs to Micro*
- *Pressure Converted To Resistance/Voltage*

Relay Output Module 1U1

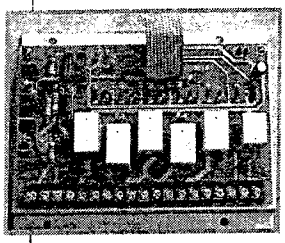

- *Provides Contact Closure for UCM (1U3) Control Of:*
  - *Free Cooling & Auxiliary Free Cooling Relays*
  - *Head Relief Request*
  - *Alarm*
  - *Condenser Water Pump Relay*
  - *IGV Open*
  - *IGV Close*

Power Supply Input/Output Module 1U2

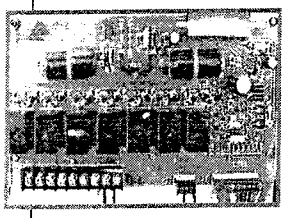

- *Provides Power to Enable UCM (1U3) Contact Closure Control of:*
  - *Reset Relay*
  - *Stop Relay*
  - *Overload Relay*
  - *Compressor Start Relay*
  - *Compressor Transition Relay*
  - *Oil Heater Relay*
  - *Oil Pump Relay*

Remote Generic BAS CWR Interface Module (1U4)

- *Used with Generic BAS Interface*
- *Accepts 0-10 VDC or 4-20mA inputs*
- *Allows Chilled Water Reset from a "Non-Trane" BAS*

Voltage Concerns

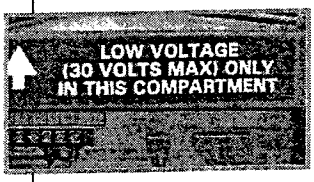

- *Do Not Exceed 30 Volts for 1TB3, 1TB4 or 1TB6 Inputs or Micro (1U3) Will Be Destroyed*

Oil Pump Components

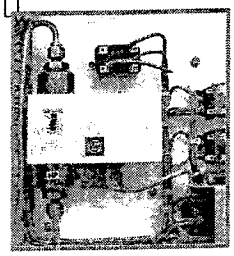

- *Oil Pressure Control*
  - *Closes @ 15# Net*
  - *Opens @ 9# Net*
- *Oil Pump Motor Capacitor*
- *Potential Relay*

Control Fuses

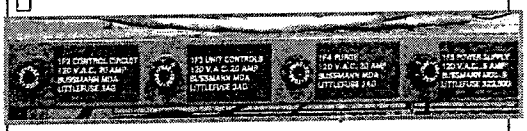

- *1F2 - Controls Power To; 1U3, Starter Control,Oil Heater, Power Supply Transformer (Through 1F5)*
- *1F3 - Controls Power To; Oil Pump, Inlet Vane Actuator*
- *1F4 - Controls Power To; Purge Control System*

Micro Module (1U3)

Operation and Interface

CONTROL RESPONSE

- *Controls Vane Actuator Response To Load and Unload Commands*
- *Range = 1 - 237*
- *Lower Setting = Slower Response*
- *To Display- Set Vane Control Switch To "Hold"*
- *Display Advance Until "L" Appears*
- *Use Equation to Calculate Setting*

$$\frac{250}{\text{Design } \Delta T} \times \frac{\text{Actual Flow}}{\text{Design Flow}}$$



START DIFFERENTIAL

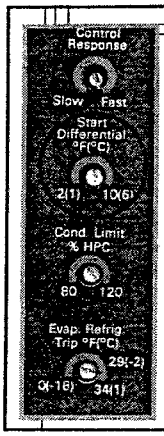

- *# Of Degrees Leaving Water Must Rise Above Setpoint For Unit To Start*
- *Controls Compressor Stop Point*
- *Range Of 2 to 10 Degrees F*
- *To Display*
  - *Control Switch to Hold*
  - *Display Advance Until "O" Appears*
- *See Table 4 on Page 14 CVHE SB-22A*

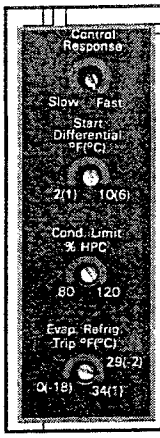

CONDENSER LIMIT (%HPC)

- *Prevents High Pressure Trips*
  - *Range 80 to 120% of HPC (15 or 25 Psig)*
  - *During Critical Chiller Operation*
    - *Slows Loading (90 -96% of Setpoint)*
    - *Holds (96 - 100% of Setpoint)*
    - *Regulated Unloading (100% of Setpoint)*
  - *Recommended Setting = 93%*
  - *Display Advance Until "P" Appears*
- *Condenser Limit - See Page 15 CVHE SB-22A*

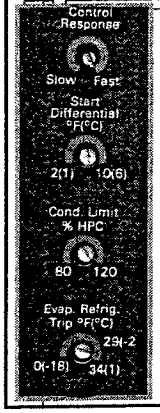

Evaporator Refrigerant Temperature Trip

- *Set to 32 °F*
- *Display Advance Until "U" Appears*
- *Limits Loading at 5 to 6 °F > Trip Point*
- *Control Point is 2 Degrees Above Trip Setpoint*
- *Hold - ~ 2 °F > Trip Point*
- *Regulated Unload ~ 1 °F > Trip Point*
- *Hard Unload @ Trip Point*
- *Machine Shutdown After Hard Unload & Temperature Violation < 30 °F/Secs*

Chiller Control Switch

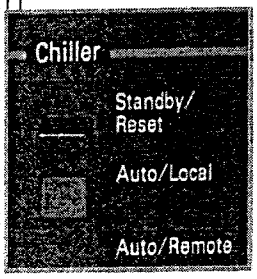

- *Standby/Reset*
  - *When Powered UCP Is Activated But Unit Operation Is Prohibited*
  - *Operating Code "AO" Is Displayed*
  - *Clears "Latching" Diagnostics*

Chiller Control Switch

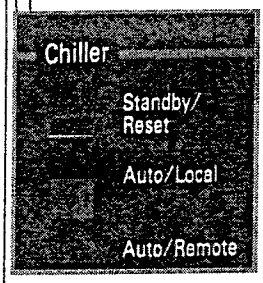

- *Auto/Local*
  - *Chiller Runs Normally Using Setpoints Set At UCM in Serviceman's Menu*

Chiller Control Switch

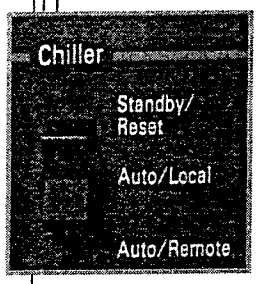

- *Auto/Remote*
  - *Unit Runs Automatically Using Remote Setpoints*
  - *Communicates Via Bi-directional Communication Link*
- *Factory Installed Chilled Water Reset Module is a "Remote Setpoint"*

Oil Pump Switch

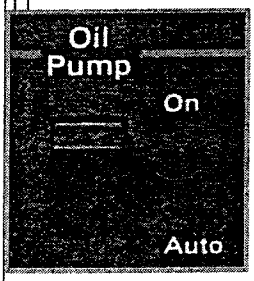

- *On = Continuous Oil Pump Operation*
  - *Service Personnel Only*
  - *Compressor Will NOT Start When Oil Pump Switch is "ON"*
- *Auto = Oil Pump Controlled By Micro*
  - *Normal Position*
  - *15 to 48 Second Pre-Lube*
  - *2 Minute Post Lube*

Purge Switch

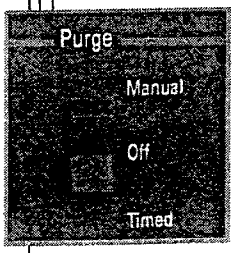

- *Manual = Continuous Operation*
  - *Even in Standby/Reset*
- *Off = Off Unless Purge Timer Activated*
- *Timed = Normal Position*
  - *5 Mins/2Hrs*
  - *Auto Extend if Unit Has Purged Within Last 4 Minutes*

Chilled Water Setpoint

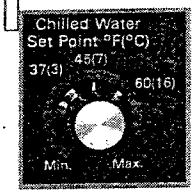

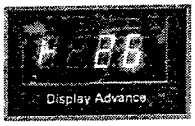

- *Vane Control Switch Set to "Hold"*
- *Display Advance Until "Ø Appears*
- *Deadband +/- 1°*

Active Chilled Water Setpoint

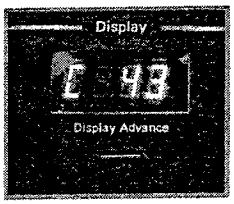

- *Toggle Between Hold (Serviceman's Menu) & Auto (Operator's Menu) to View Active or Local Setpoint*

Current Limit

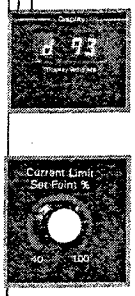

- 40%-100% of Compressor RLA
- Serviceman's Menu - Display Advance Until "" Appears
- Operator's Menu - Display Advance Until "d" Appears (For Active Setpoint)
- 1% Increments
- As Current Approaches Setpoint-
  - 1. UCM Limits Loading
  - 2. UCM Initiates "Modulated" Unloading
- At Setpoint-
  - Trips

VANE CONTROL SWITCH

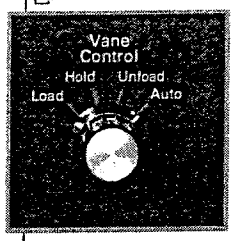

- Load - Manually Loads Compressor
  - Unless In A Limit Mode
- Unload - Manually Unloads Compressor
- Auto - UCM Controls Vane Actuator
- Hold - Vane Actuator Maintains Position
  - Unless In A Limit Mode
  - Changes Display To "Serviceman's Menu"

Clear Restart Inhibit

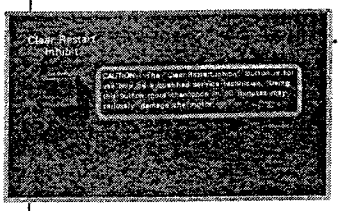

- CAUTION!
  - Service Personnel Only
  - Push Once Per 30 Minutes
    - Serious Motor Damage Possible

Operator's Menu

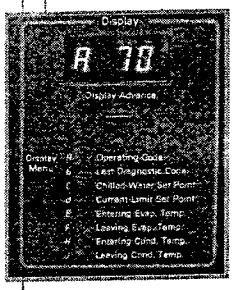

- *4 Digit Display*
- *1st Digit Is Code Prefix*
- *2nd Digit Is Blank*
- *3rd & 4th Digits Are:*
  - *Operating Mode*
  - *Diagnostics*
  - *Setpoints*
  - *Actual Temperatures*

Serviceman's Menu

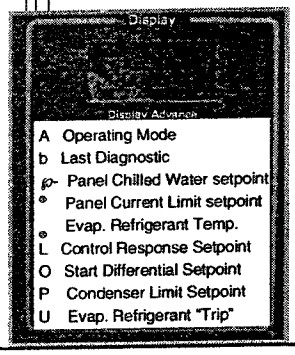

- *Turn Slide Valve Control Switch To "HOLD"*

Unit Status

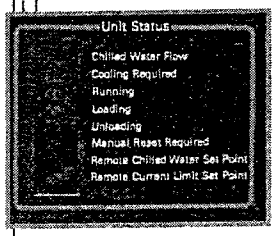

- *1. Indicates Chilled Water Flow Switch 5S2 Is Closed*
- *2. UCM Proves CW Flow and Detects a Cooling Call*
- *3. a. Unit is Running*
  b. Chiller Switch Is Set At Auto/Local or Auto/Remote
  c. Transition is Complete
- *4. UCM is Loading Compressor and Relay 1U1Q7 is Energized*
- *5. UCM is Unloading Compressor and Relay 1U1Q8 is Energized*
- *6. UCM Detects a Latching Diagnostic Condition*
- *7. & 8. Setpoint Entered From a Remote Source and Overrides Local Setting (Defaults to Local if Remote Comm. is Lost)*

IU-3 WITH CHILLED WATER RESET

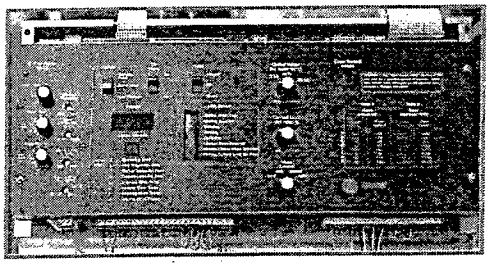

RESET SWITCHES

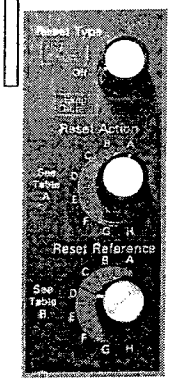

- *Reset Type*
- *Reset Action*
- *Reset Reference*

Reset Type

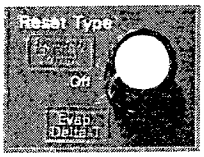

- *Select Chilled Water Reset Based On;*
  - *Remote Temp (Outdoor Air)*
  - *Evap Delta T*

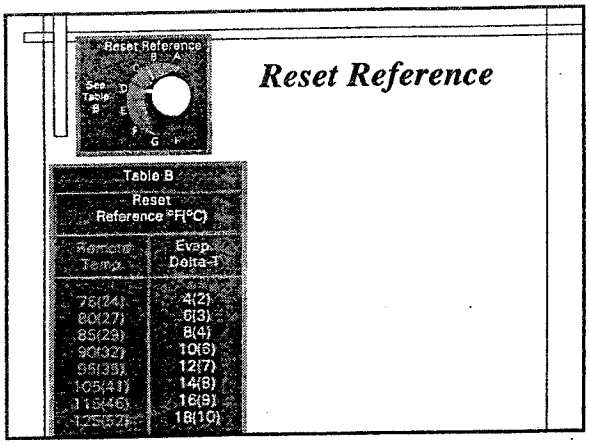

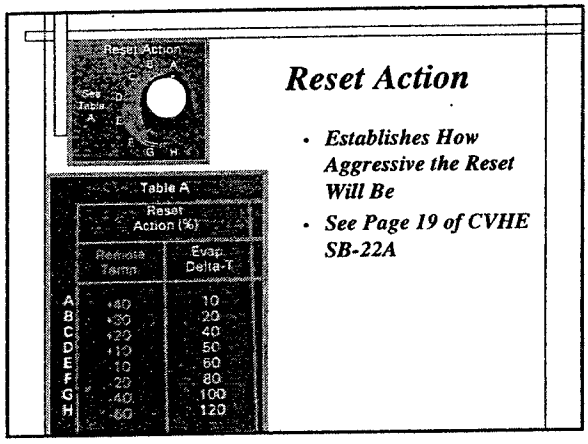

- *Establishes How Aggressive the Reset Will Be*
- *See Page 19 of CVHE SB-22A*

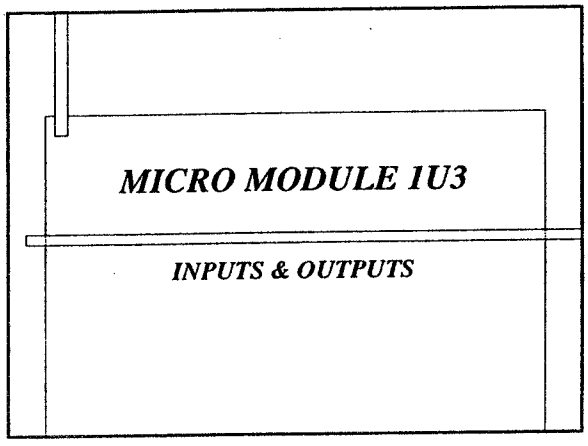

ANALOG/BINARY INPUT CONNECTIONS

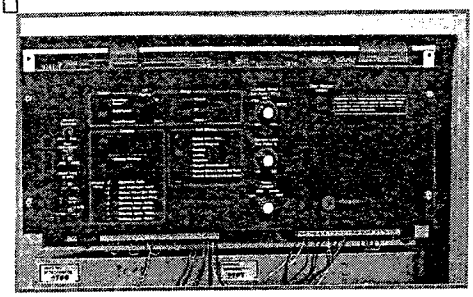

1TB6-Terminals 1 & 2

- Bidirectional Communications Link
  - Twisted Wire Pair
  - No Polarity Requirements

TERMINAL STRIP 1TB3

Terminal	Input Connections
1 & 2	Leaving Evap. Water Temp. Sensor
3 & 4	Entering Evap. Water Temp. Sensor
5,6 & 7,8	Spare Temperature Sensors
9,10,11	Condenser Refrigerant Pressure Transducer
12 & 13	Evaporator Refrigerant Temp. Sensor
14 & 15	Condenser Refrigerant Temp Sensor, Ambient Temp Sensor, GBAS Analog Input
16 & 17	External Interlock, External Inhibit
18 & 19	Free Cooling Valve Proof of Closure
20 & 21	Proof of Chilled Water Flow
22 & 23	Proof of Condenser Water Flow
24 & 25	Proof of Inlet Guide Vane Closure

TERMINAL STRIP 1TB4

Terminal	*Input Connections*
1 & 2	*Differential Oil Pressure Switch*
3 & 4	*Running External Interlock*
5 & 6	*"Transition Complete" Contacts*
7 thru 12	*3 Phase-Sensing Input (CT's)*
13 & 14	*Oil Temperature Sensor*
15 thru 18	*Motor Winding Temp. Sensors*
19 thru 22	*Bearing Temp. Sensors*

Troubleshooting

Factory Setup for UCM DIP Switches

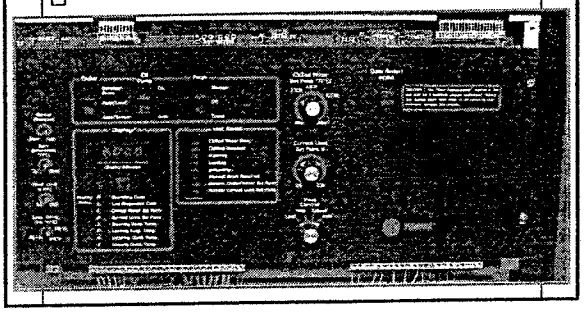

UCP DIP Switches - S11

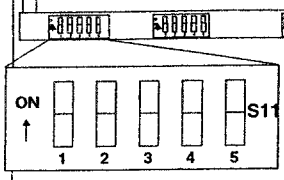

- Address DIP Switch Settings



- Used With System Control Panel (SCP)

UCP DIP Switches - S9

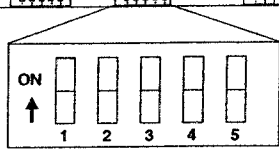

- 1 Purge Type
- 2, 3 Unit Identification
- 4 Set Point Range
- 5 Unit of Measure



UCP DIP Switches - S3

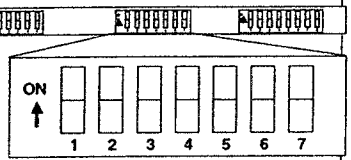

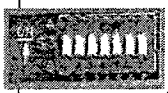

- 1st 5 Switches = Acceleration Time
- #6 = Frequency Adjustment
- #7 = Enables Phase Imbalance/Surge Protection

UCP DIP Switches - S1

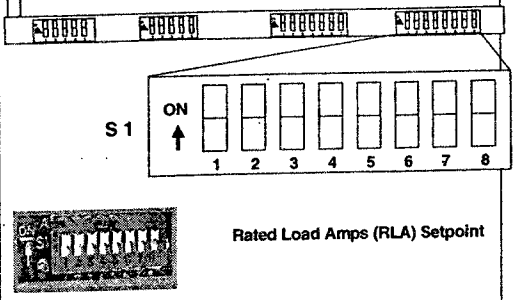

Temperature Sensor Checkout Procedure

- *Resistance*
- *Voltage*
- *Temperature*

Control Panel Diagnostics

- *b A3 - Evap. Refrigerant Temperature Range*
- *b A4, A7, A8 - Motor Temperature Sensors*
- *b A5 - Maximum Acceleration Time Range*
- *b A9 - Oil Temperature Sensor*
- *b Ab - Leaving Evap. Water Temp. Sensor*
- *b Ad - Evaporator Refrigerant Temperature Sensor*
- *b AE - Ambient Temperature Sensor*
- *b E4 - Phase Loss*
- *b Af - Bearing Sensor #1 (Inboard)*
- *b bO - Bearing Sensor #2 (Outboard)*
- *b d9 - Extended Power Loss*
- *b dA - Surge*
- *b dc - Condenser Water Flow Overdue*
- *b E2 - Momentary Power Loss*
- *b E3 - Phase Imbalance*
- *b E4 - Phase Loss*
- *b E5 - Phase Reversal*
- *b E7 - High Motor Temperature*

Control Panel Diagnostics

- b E8 - Differential Oil Pressure
- b E9 - Stop Relay
- b EA - High Inboard Bearing Temp
- b Eb - High Outboard Bearing Temp
- b EC - Running Overload
- b Ed - Chilled Water Flow
- b EE - Max Acceleration Time Exceeded
- b FO - Transition
- b F1 - Running External Interlock
- b F2 - Low Oil Pressure
- b F3 - Low Oil Temperature
- b F4 - High Oil Temperature
- b F5 - High Condenser Refrigerant Pressure
- b F7 - Condenser Water Flow
- b F8 - Improper Unit Identification
- b F9 - Free Cooling Valves
- b FA - Actuator
- b Fb - Low Evap Refrigerant Temp
- b Fd - External Interlock
- b FF - Unit Control Module

Power Supply Checkout

- Power Supply Output Module (1U2)
- Power Transformer (1T1)

Power Transformer (1T1)

- Check Fuse
- Check Power Source
- Check DC Pin Voltages
- Check AC Pin Voltages

Power Supply Output Module (1U2)

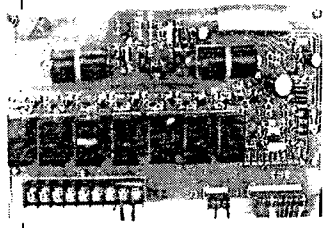

- *Check DC Pin Voltages*
- *Check AC Pin Voltages*
- *If Voltages Are Out of Range & Power Transformer Checks O.K. - Then 1U2 Is Bad*

Compressor Transition Relay (1U2K5)

- *Faulty Current-Sensing Inputs (1TB4-7 Thru 12)*
- *Defective Micro Module (1U3)*
- *Defective Power Supply Output Module (1U2)*
- *Faulty Starter Component(s) or Wiring*
- *Faulty "Proof of Transition" Circuit*

Relay Output Module 1U1

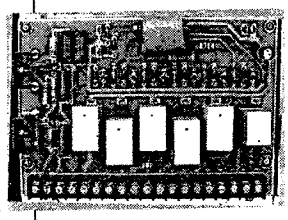

- *Check AC Pin Voltages*
- *Check DC Pin Voltages*
- *Check Voltages with Ribbon Cable Connected (Pins Loaded)*

Current Transformer Checkout

- Primary CT's
  - Proper Polarity
  - Properly Sized
  - # of Turns
  - DIP Switches Properly Positioned
  - Monitor Output
- Auxiliary CT's
  - Check Voltages

Vane Control Diagnosis

- Inlet Vane Faults
  - Blown Branch Circuit Fuse (1F3)
  - Faulty Actuator Wiring
  - Defective Actuator
  - Triac Switch Failure In 1U1
  - Micro Module (1U3) Malfunction

Condenser Water Pump Relay Checkout

- Measure DC Pin Voltages
- Continuity Checks
- Blown Fuses
- Water Valves Open
- Condenser Water Flow Switch
- Auxiliary Contacts Closing

Remote Generic BAS CWR Interface Module (1U4)

- *Used with Generic BAS Interface*
- *Accepts 0-10 VDC or 4-20mA inputs*
- *Allows Chilled Water Reset from a "Non-Trane" BAS*

System Control Panel

5

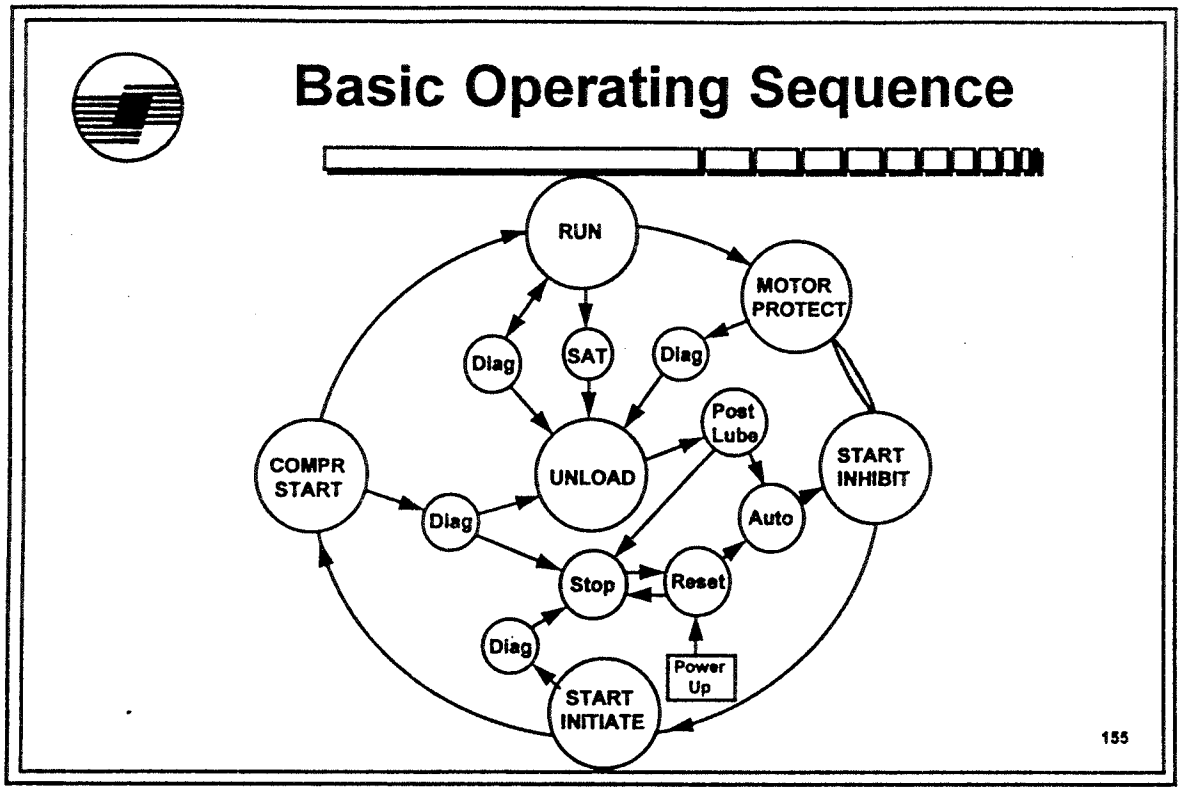

•This diagram is an all inclusive view that shows the full operation of the system.

•As you notice, a series of bubbles make up the schematic drawing.

•Follow the bubbles.

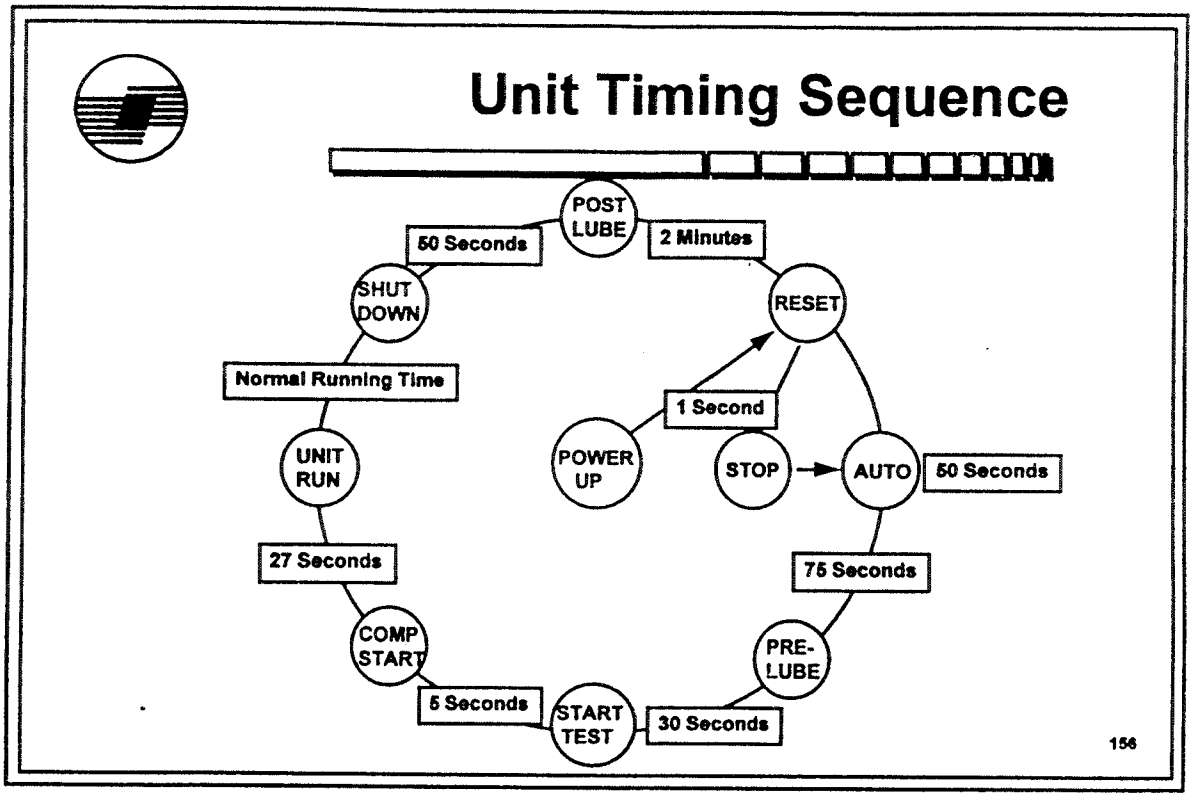

•This chart shows timing from startup to shutdown.

•Notice that it takes about 2 to 3 minutes to start and stop a Centravac.

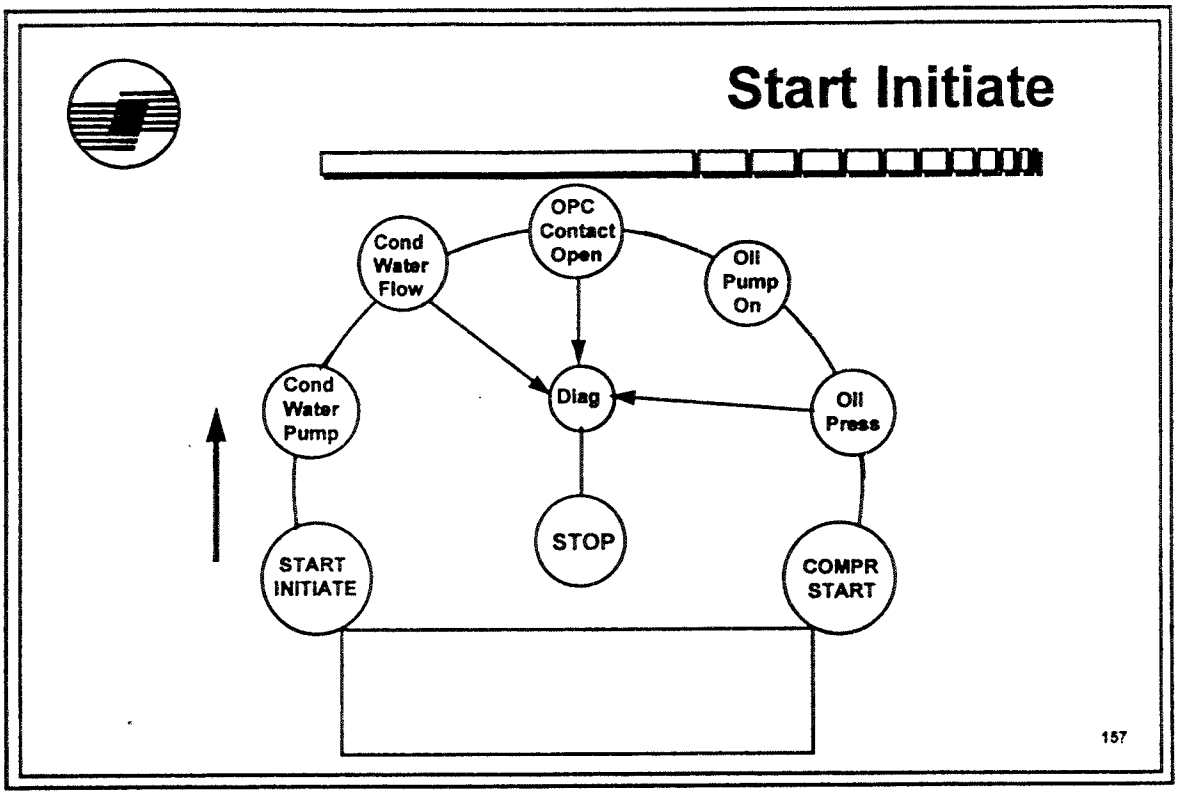

•From start initiate to compressor start many commands must occur.

•Describe the operation as presented.

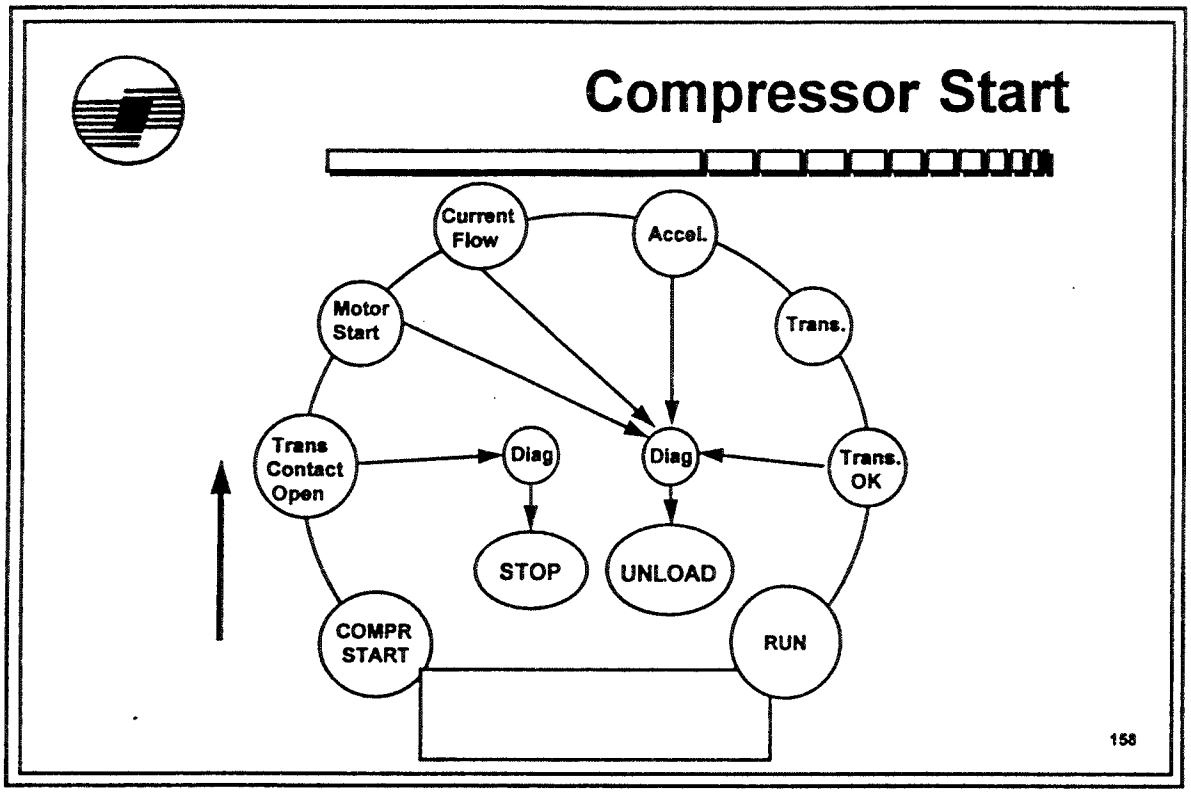

•Follow the compressor start circuit to compressor run.

•Describe what you see.

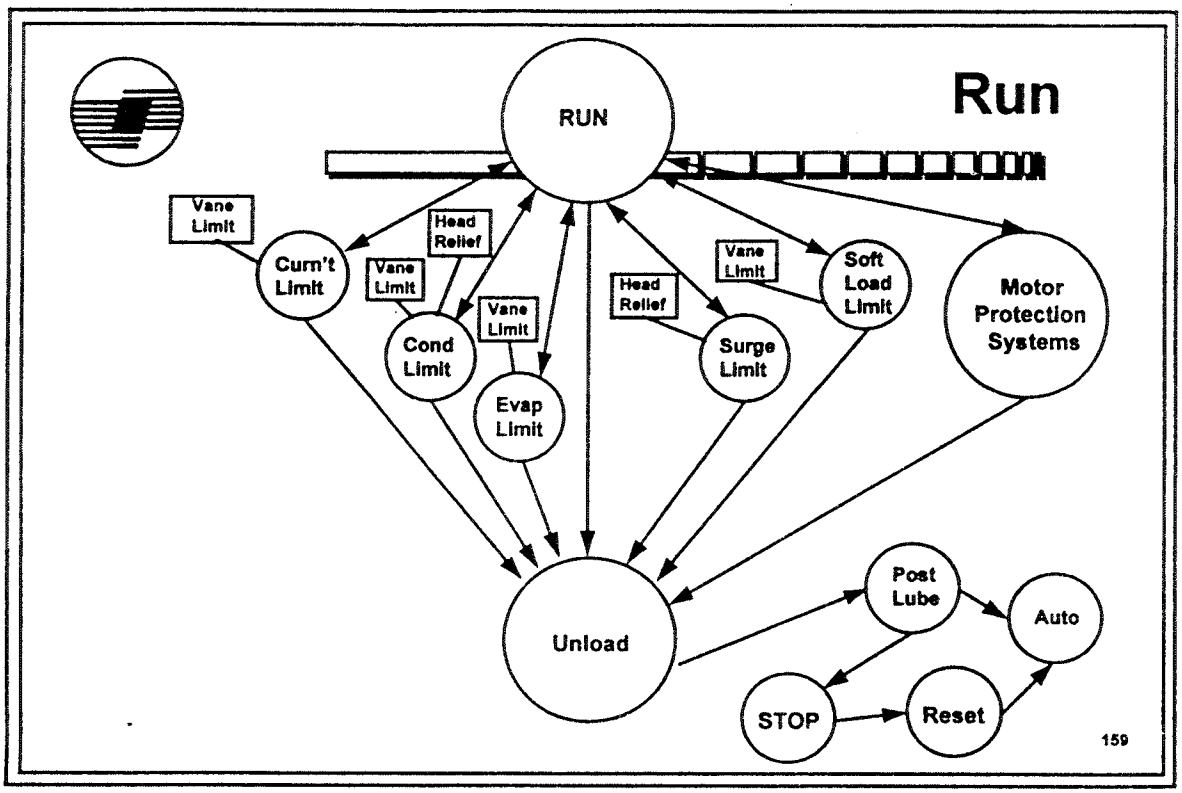

•This is the run mode.

•All run functions have safeties.

•As you notice, most problem areas utilize a vane limit function that closes the vanes as trouble increases. The main objective is to keep the chiller on line, not shut down.

•Example:

Current Limit

Current Limit must hold at 102% RLA
Current Limit must trip in 20 Sec. at 112% RLA
Current Limit must trip in 1.5 Sec. at 140% RLA

During this time the vanes will be unloading at a faster rate based on the increase of amperage.ie: 1 Sec. drive/5 Sec. off
2 Sec. drive/5 Sec. off
3 Sec. drive/5 Sec. off
4 Sec. drive/5 Sec. off
5 Sec. drive/5 Sec. off
Full Drive Closed/System off

PSIA to PSIG
HG to PSIG

PSIA	PSIG
44.7	30.0
43.7	29.0
42.7	28.0
41.7	27.0
40.7	26.0
39.7	25.0
38.7	24.0
37.7	23.0
36.7	22.0
35.7	21.0
34.7	20.0
33.7	19.0
32.7	18.0
31.7	17.0
30.7	16.0
29.7	15.0
28.7	14.0
27.7	13.0
26.7	12.0
25.7	11.0
24.7	10.0
23.7	9.0
22.7	8.0
21.7	7.0
20.7	6.0
19.7	5.0
18.7	4.0
17.7	3.0
16.7	2.0
15.7	1.0
14.7	0.0

PSIA	"HG	PSIG
14.7	0"	0.00
14.2	1"	-0.48
13.7	2"	-0.98
13.3	3"	-1.47
12.8	4"	-1.96
12.3	5"	-2.45
11.8	6"	-2.94
11.3	7"	-3.43
10.8	8"	-3.92
10.3	9"	-4.42
9.8	10"	-4.91
9.3	11"	-5.40
8.8	12"	-5.89
8.3	13"	-6.38
7.9	14"	-6.87
7.4	15"	-7.36
6.8	16"	-7.85
6.4	17"	-8.34
5.9	18"	-8.84
5.4	19"	-9.33
4.9	20"	-9.82
4.4	21"	-10.31
3.9	22"	-10.80
3.4	23"	-11.29
2.9	24"	-11.78
2.5	25"	-12.27
2.0	26"	-12.77
1.5	27"	-13.26
1.0	28"	-13.75
0.5	29"	-14.24
0.0	29.92"	-14.69

TRANE®

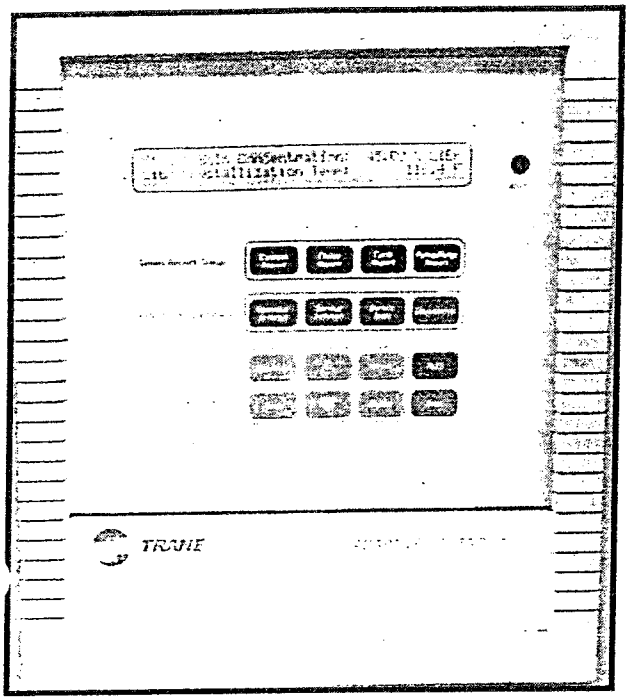

CenTraVac

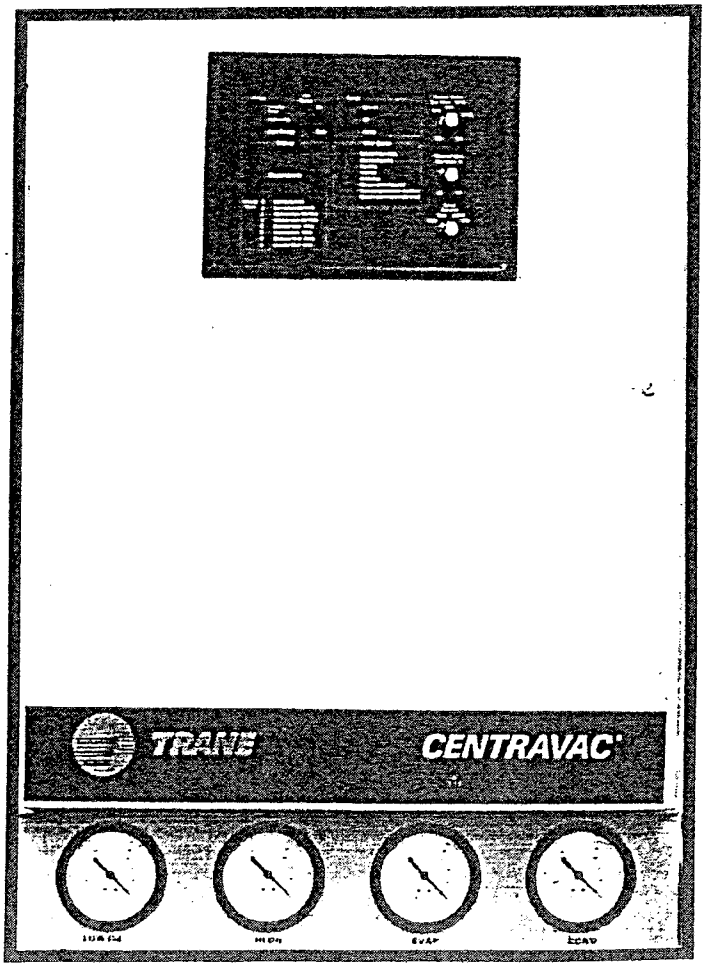

Controls

UCPII Sensor Location

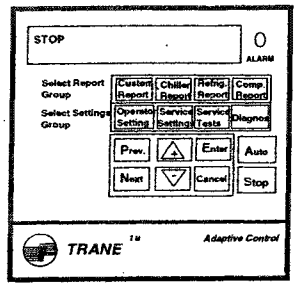

Saturated Evaporator Sensor



Chilled Water Entering and Leaving

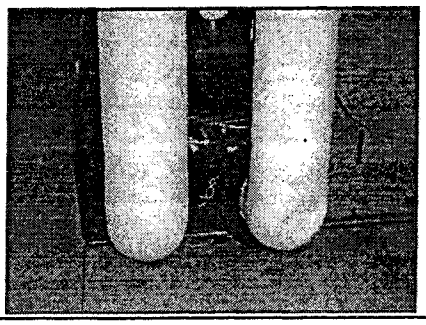

Oil Sump Temperature

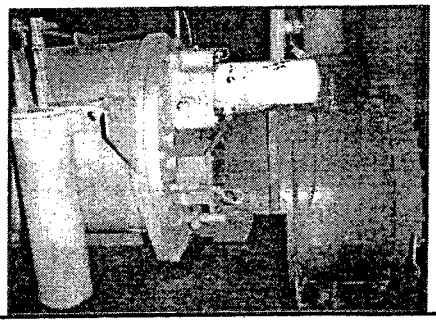

Bearing #1 Temperature
(Journal Bearing)

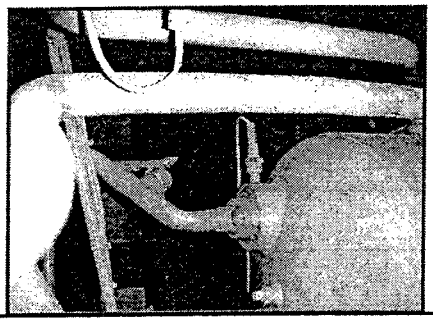

Bearing #2 Temperature
(Thrust Bearings)

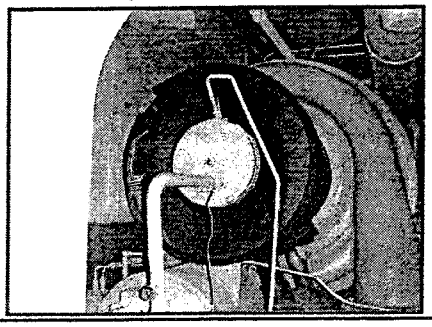

Discharge Gas Temperature Sensor

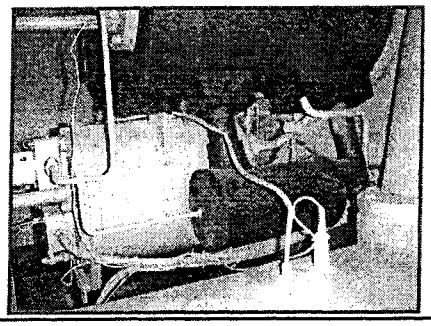

Condenser Water Entering and Leaving

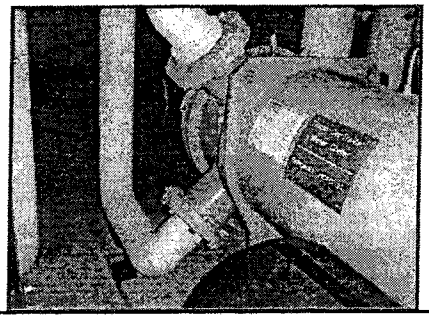

Saturated Condenser Temperature Sensor

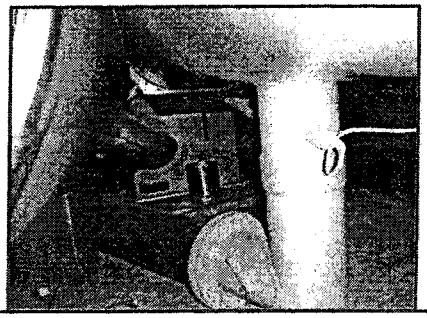

Purge Suction Temperature Sensor

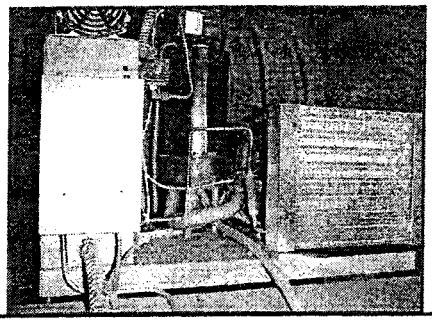

IGV Actuator BPI Switch

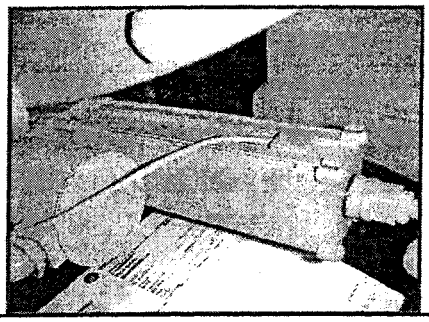

Oil Pressure Tranducers

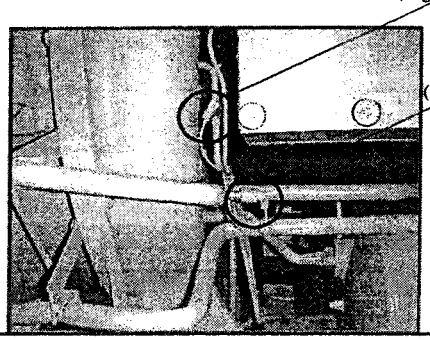

High Pressure Cutout (HPC)

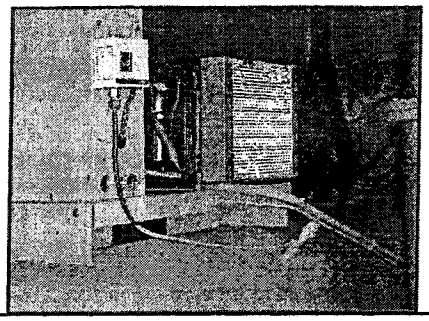

Optional Condenser Transducer

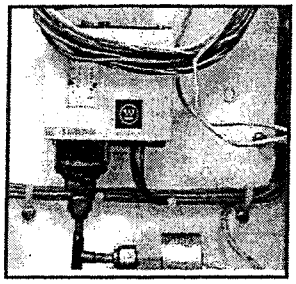

UCP 2 Adaptive Control

System CVHE - CVHF

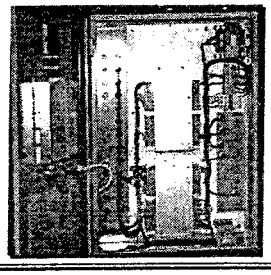

1

Why Use Adaptive Control?

* What Do You Expect From A Chiller?
  - To Make the Tons When You *Need* the Tons
* Enhanced Adaptive Control Increases System Reliability
  - Centrifugal Control Strategies For:
    - Low Evaporator Refrigerant Temperature
    - Current Limit
    - Low Leaving Chilled Water Temperature
    - High Condenser Pressure
* Multi-phase Control Strategy Keeps Chiller On-line As Long As Possible, With As Much Load As Possible, *Safely*
* Limit Warning Relay - Contact Closure Notifies Operator

2

Adaptive Control

*Adaptive Control
- Keeps Chilled Water Flowing Reliably
- Provides Maximum Flexibility to Safely Meet Chilled Water Requirements
- Prevents Chiller Shut-Down When an Abnormal Condition is Encountered

*Multi-Phase Control Strategy
- Limit Loading
- Hold Loading
- Reduce Loading
- Machine Shutdown for Protection

3

Adaptive Control (Example)

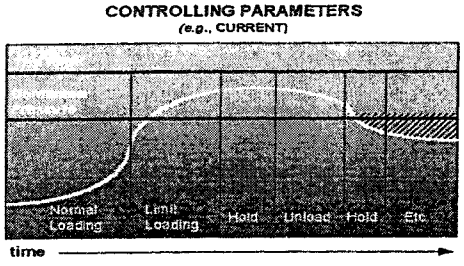

4

Introduction

* Control System Overview
* Cruising the Menu - Reports Cruising the Menu - Factory Operational Settings Operator Settings Group
  - Machine Configuration Group
  - Field Startup Group
  - Service Settings Group
* Tests, Diagnostics, Logging and Bubble Chart
* Module Input / Output Values and Component Description

5

UCP 2 Architecture

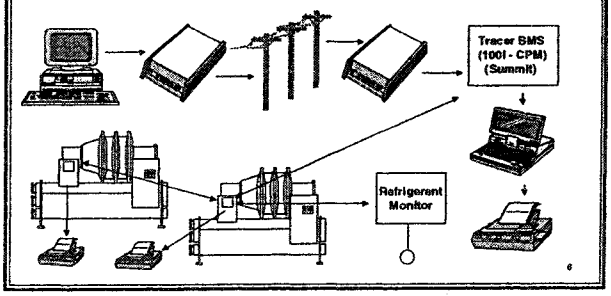

6

What Is UCP2?

* **UCP2 Is A Modular Unit Control Panel**
  - Flexibility Of Modularity
  - Changing Applications
  - Enhanced Serviceability
  - Commonality of Boards Reduces Downtime and Service Expense

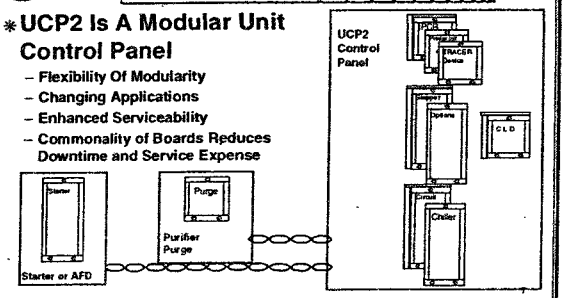

UCP2 Is Not ...

* A BAS Panel
* A Sequencing Panel
* A Cooling Tower Controller
* A System Level Controller

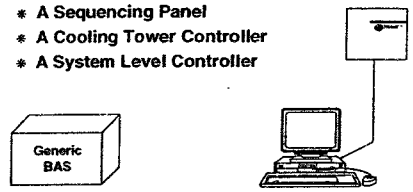

UCP 2 Innovations

* Modular Design
* Clear Language Display (CLD)
* More Input / Output Options Included
* Starter Module (Unit-Mounted or Remote)
* Stepper Drive Motor / Inlet Guide Vanes
* Variable Speed Drive Compressor Motor

Clear Language Display

* Password Protection
  - Enable/Disable Capability
  - Multiple Passwords
* Over 200 Diagnostics w/Time and Date Stamp
  - Dedicated Diagnostic Summary Report
* Remote Clear Language Display Panel
  - Communicates With 1 - 4 UCP2 Chillers
  - Duplicates Chiller Mounted Panel Functions



10

UCP2...World's Best Early Warning Leak Detector

* Microprocessor-based Purifier Purge Plus
  - Pumpout Rate (Minutes/24 Hours)
  - Total Pumput Time
  - Total Run Time
  - Adaptive Cycle + Time to Next Purge Operation
  - Comprehensive Purge Diagnostics

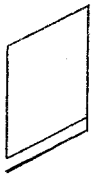

11

UCP2... The World's Best Early Warning Leak Detector

* Refrigerant Monitor Integration PPM Display
  Assists in ASHRAE Standard 15 Compliance

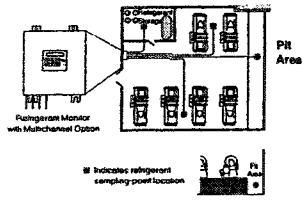

12

MODULES

13

Module Designations

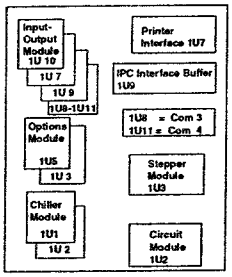

* Chiller Module (1U1)
* Circuit Module (1U2)
* Stepper Module (1U3)
* Clear Language Display (1U4)
* Options Module (1U5)
* 4 Interface Modules (1U6 - 9)
* I.O. Module (1U10)
* Duplex Control Module (1U12)
* Starter Module (2U1)
* Purge Module (3U1)

14

Module Arrangement

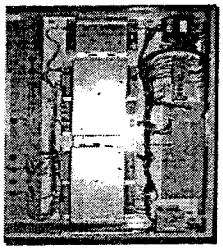

* Modules are Stacked
* Identification is on Side of Module

15

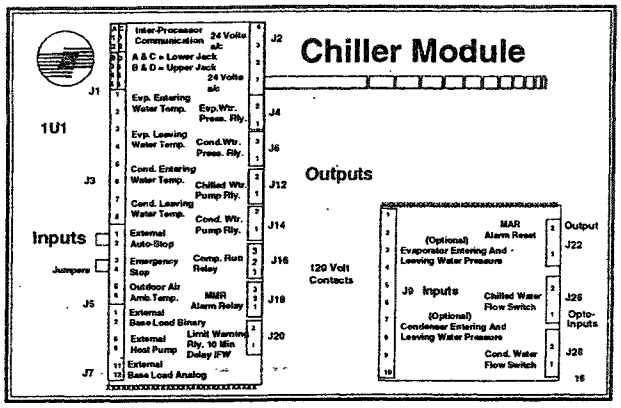
Chiller Module
1U1
Inputs
Jumpers
Outputs
Inter-Processor Communication
24 Volts a/c
A & C = Lower Jack
B & D = Upper Jack
24 Volts a/c
Evp. Entering Water Temp.
Evp.Wtr. Press. Rly.
Evp. Leaving Water Temp.
Cond.Wtr. Press. Rly.
Cond. Entering Water Temp.
Chilled Wtr. Pump Rly.
Cond. Leaving Water Temp.
Cond. Wtr. Pump Rly.
External Auto-Stop
Emergency Stop
Comp. Run Relay
Outdoor Air Amb.Temp.
MMR Alarm Relay
External Base-Load Binary
External Heat Pump
Limit Warning Rly, 10 Min Delay IFW
External Base Load Analog
120 Volt Contacts
(Optional) Evaporator Entering And Leaving Water Pressure
MAR Alarm Reset
J9 Inputs
Chilled Water Flow Switch
(Optional) Condenser Entering And Leaving Water Pressure
Cond. Water Flow Switch
Output
Opto-Inputs
J1
J2
J3
J4
J5
J6
J7
J12
J14
J16
J18
J20
J22
J26
J28
16

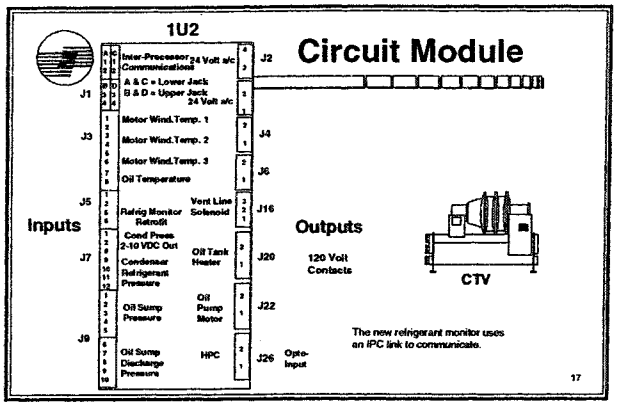
1U2
Circuit Module
Inputs
Outputs
Inter-Processor Communications
24 Volt a/c
A & C = Lower Jack
B & D = Upper Jack
24 Volt a/c
Motor Wind.Temp. 1
Motor Wind.Temp. 2
Motor Wind.Temp. 3
Oil Temperature
Refrig Monitor Retrofit
Vent Line Solenoid
Cond Press 2-10 VDC Out
Condenser Refrigerant Pressure
Oil Tank Heater
Oil Sump Pressure
Oil Pump Motor
Oil Sump Discharge Pressure
HPC
120 Volt Contacts
Opto-Input
CTV
The new refrigerant monitor uses an IPC link to communicate.
J1
J2
J3
J4
J5
J6
J7
J9
J16
J20
J22
J26
17

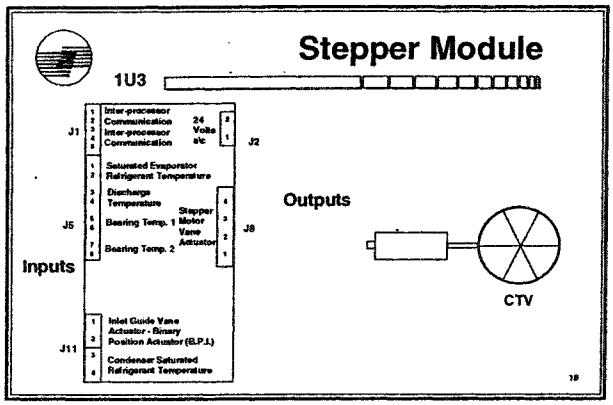
Stepper Module
1U3
Inputs
Outputs
Inter-processor Communication
Inter-processor Communication
24 Volts a/c
Saturated Evaporator Refrigerant Temperature
Discharge Temperature
Bearing Temp. 1
Bearing Temp. 2
Stepper Motor Vane Actuator
Inlet Guide Vane Actuator - Binary Position Actuator (B.P.I.)
Condenser Saturated Refrigerant Temperature
CTV
J1
J2
J5
J8
J11
19

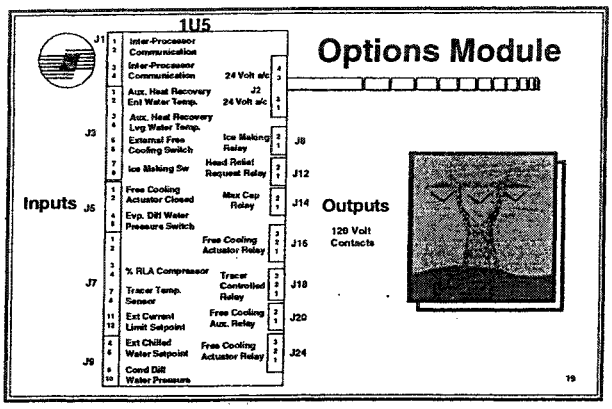
1U5
Options Module
Inputs
Outputs
120 Volt Contacts
Inter-Processor Communication
Inter-Processor Communication
24 Volt a/c
Aux. Heat Recovery Ent Water Temp.
Aux. Heat Recovery Lvg Water Temp.
External Free Cooling Switch
Ice Making Sw
Ice Making Relay
Head Relief Request Relay
Free Cooling Actuator Closed
Evp. Diff Water Pressure Switch
Max Cap Relay
Free Cooling Actuator Relay
% RLA Compressor
Tracer Temp. Sensor
Tracer Controlled Relay
Ext Current Limit Setpoint
Free Cooling Aux. Relay
Ext Chilled Water Setpoint
Cond Diff Water Pressure
J1
J2
J3
J5
J7
J9
J8
J12
J14
J16
J18
J20
J24
19

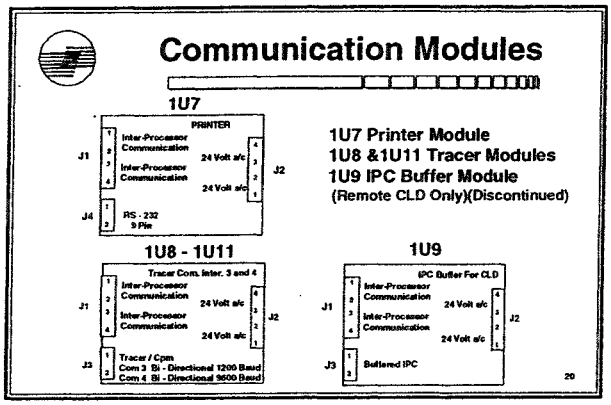
Communication Modules
1U7
PRINTER
Inter-Processor Communication
24 Volt a/c
RS - 232 9 Pin
1U7 Printer Module
1U8 &1U11 Tracer Modules
1U9 IPC Buffer Module
(Remote CLD Only)(Discontinued)
1U8 - 1U11
Tracer Com. Inter. 3 and 4
Tracer / Cpm
Com 3 Bi - Directional 1200 Baud
Com 4 Bi - Directional 9600 Baud
1U9
IPC Buffer For CLD
Buffered IPC
J1
J2
J3
J4
20

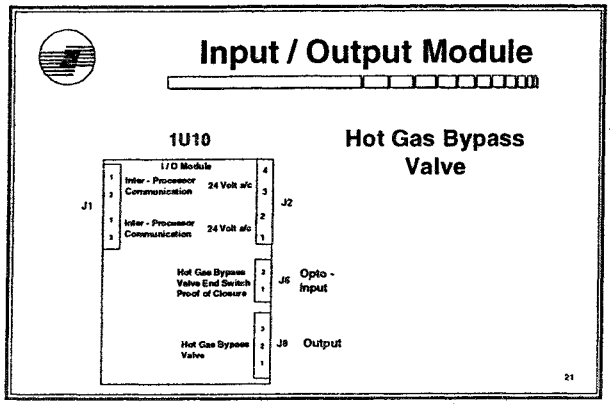
Input / Output Module
1U10
Hot Gas Bypass Valve
I / O Module
Inter - Processor Communication
24 Volt a/c
Hot Gas Bypass Valve End Switch Proof of Closure
Opto - Input
Hot Gas Bypass Valve
Output
J1
J2
J5
J8
21

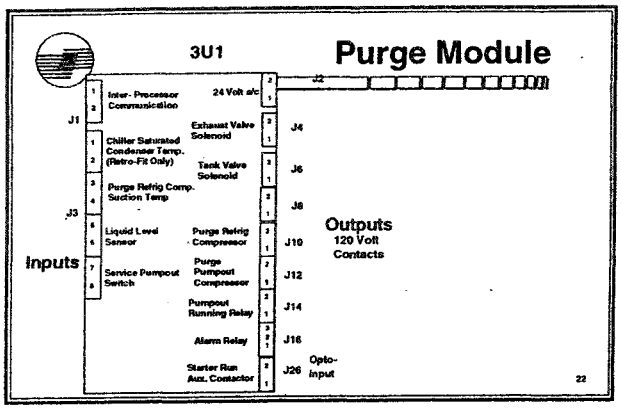
3U1
Purge Module
J1
Inter- Processor Communication
24 Volt a/c
J2
Exhaust Valve Solenoid
J4
Chiller Saturated Condenser Temp. (Retro-Fit Only)
Tank Valve Solenoid
J6
Purge Refrig Comp. Suction Temp
J8
J3
Liquid Level Sensor
Purge Refrig Compressor
J10
Outputs
120 Volt Contacts
Inputs
Service Pumpout Switch
Purge Pumpout Compressor
J12
Pumpout Running Relay
J14
Alarm Relay
J16
Starter Run Aux. Contactor
J26
Opto-Input
22

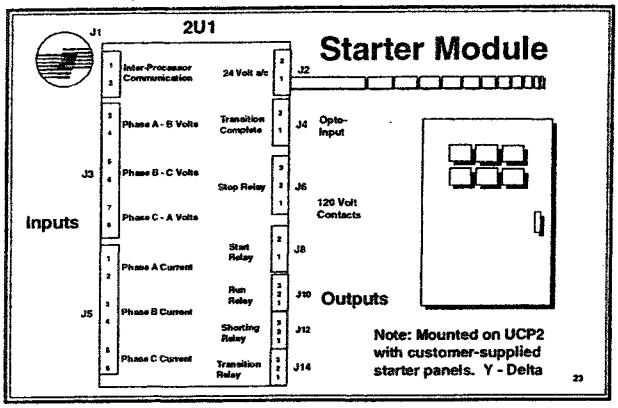
J1
2U1
Starter Module
Inter-Processor Communication
24 Volt a/c
J2
Phase A - B Volts
Transition Complete
J4
Opto-Input
J3
Phase B - C Volts
Stop Relay
J6
120 Volt Contacts
Inputs
Phase C - A Volts
Start Relay
J8
Phase A Current
Run Relay
J10
Outputs
J5
Phase B Current
Shorting Relay
J12
Note: Mounted on UCP2 with customer-supplied starter panels. Y - Delta
Phase C Current
Transition Relay
J14
23

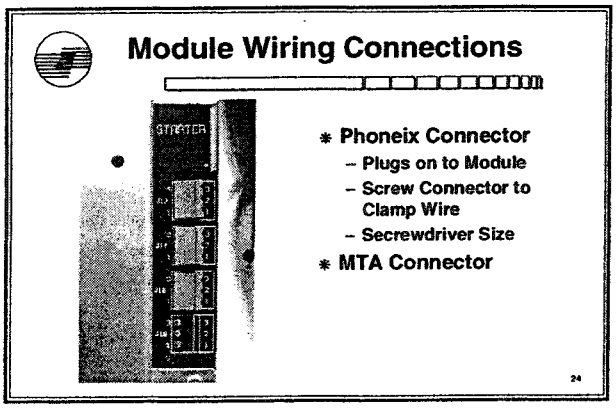
Module Wiring Connections
STARTER
* Phoneix Connector
– Plugs on to Module
– Screw Connector to Clamp Wire
– Secrewdriver Size
* MTA Connector
24

Module Identification

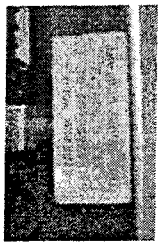

* Identification Tag on Side of Module
* Rev Number is Necessary When Troubleshooting
* X Number is Used for Parts Identification

25

TEST POINTS

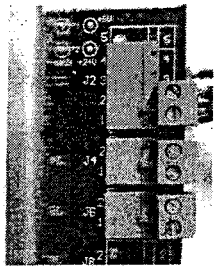

* Used to Determine Module's Capacity to Process Data
* VOM Probe to Test Point & Other Probe to Grounding Plane on Side of Board

26

Remote Mounted Starter with P.F. Correction Capacitors

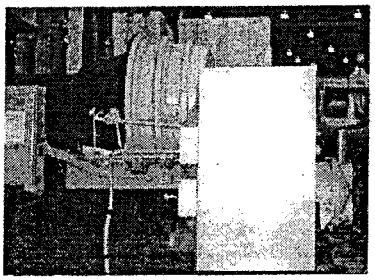

27

Clear Language Display Module

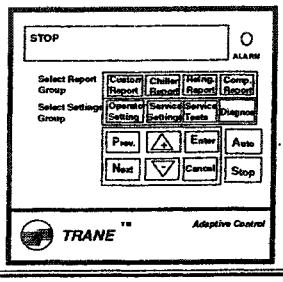

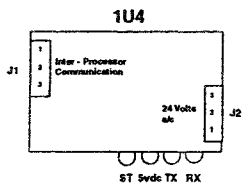

28

CHILLER MODULE

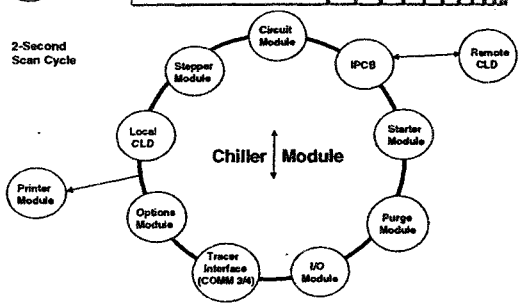

29

Cruising The Menu



30

Clear Language Display

(Continued)

Keypad Layout

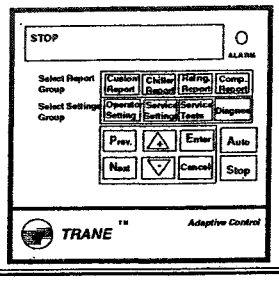

* 4 Report Groups
  - Custom Reports
  - Chiller Reports
  - Refrigerant Reports
  - Compressor Reports
* 4 Settings Groups
  - Operator Settings
  - Service Settings
  - Service Tests
  - Diagnostics

31

Service Settings

(Machine Configuration Group)

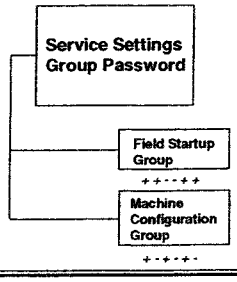

* Password required to access the Machine Configuration Group
* Password is: + - + - + -
* Access time expires if keyboard is not used within 10 minutes of entering password

32

Service Settings Group

(Machine Configuration Group)

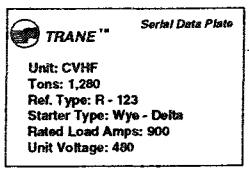

* Machine Configuration Group Settings
  - You Provide Data Describing the Chiller and How It Should Respond
  - This Is the Serial Data Plate of the Unit

33

Machine Configuration Group

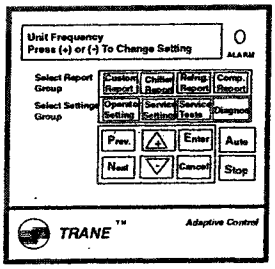

* 60 Hz
* 50 Hz

Machine Configuration Group

(Continued)

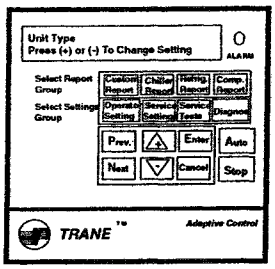

* Unit Type
  - Values CVHE, CVHF, CVHG, CVHB, CVHD,
  - CVGE, CVGG
  - FastPak - Water Cooled or FastPak - Air Cooled
  - Factory ROM default is CVHE

Machine Configuration Group

(Continued)

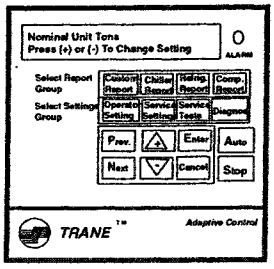

* Unit Tons
  - Values are 100 thru 1,800 Tons (10-Ton increments)
  - Factory default is 500 Tons

Machine Configuration Group

(Continued)

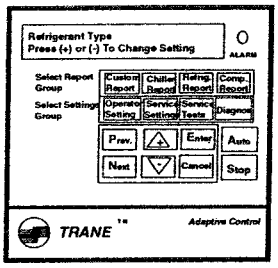

* Refrigerant Type
  - R-11
  - R-12
  - R-22
  - R-113
  - R-123
  - R-134a
* Default R-123

Machine Configuration Group

(Continued)

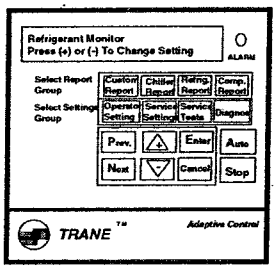

* Refrigerant Monitor
  - None
  - Analog Interface (Not Available on FastPak)
  - IPC Interface
* Default = None

Machine Configuration Group

(Continued)

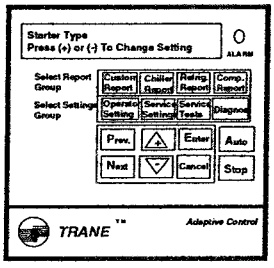

* Starter Type
  - Undefined
  - AFD
  - Y-Delta
  - X Line
  - Solid State C515
  - Solid State SMCDP
  - Auto Transformer
  - Primary Reactor
  - Stand Alone no Starter Module
* Default = Y-Delta

Machine Configuration Group

(Continued)

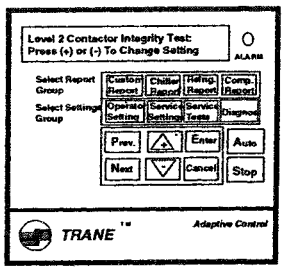

* Start Up Contactor Test
  - Disable
  - Enable
* Default = Disable

40

Machine Configuration Group

* Level 2 Contactor Integrity Test
  - Wye Contactor *2K1* Is Energized and Circuit Current Is Looked for.
  - If None Is Found, *2K1* Is Released and *2K3* Is Energized and Current Is Looked for.
  - If None Is Found the Unit Starts. *2K1* Is Re-energized If Current Is Found (Showing a Welded, Closed Contactor) the Unit Goes Into a Diagnostic and Locks Out.
* Used On Wye-delta Starters Only

41

Machine Configuration Group

(Continued)

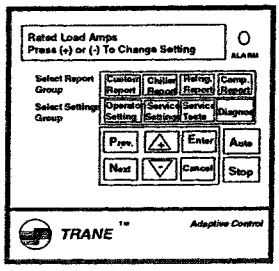

* Rated Load Amps
  - Range 0 to 2500 in One Amp Increments
* ROM Default - 500

42

Machine Configuration Group

(Continued)

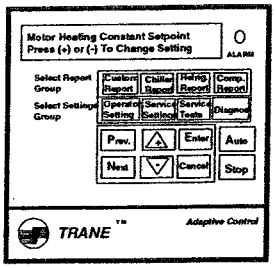

* Motor Heating Constant
  - Range 0 to 100 Minutes
* ROM Default = 25 Minutes
* Background Timer is Incremented by Motor Heating Constant Value Each Time Compressor Starts
* Value is Determined by How Long it Will Take Motor to Dissipate Heat
* See Page 59 CVHE OM-8A

43

Motor Heating Constant

60 Cycle

* CVHE/F 230 - 320 Ton = 30 Min
* CVHE/F 360 - 500 Ton = 35 Min
* CVHE/F 560 - 800 Ton = 40 Min
* CVHE/F 890 - 1280 Ton = 50Min

50 Cycle

* CVHE/F 190 - 270 Ton = 30 Min
* CVHE/F 300 - 420 Ton = 35 Min
* CVHE/F 470 - 660 Ton = 40 Min
* CVHE/F 740 - 1040 Ton = 45 Min

* RI = BT - 50 Which Is Recalculated After Each Start
* Background Timer Decrements 1 Second for Each Second of Motor Operation
* Background Timer Decrements 1 Second for Every 5 Seconds of "Off" Time

44

Restart Inhibit Time Calculation

* RI = BT - 50
* Motor Constant = 30
* Machine Runs 10 Minutes @ Start
* Background Timer is Recalculated After Each Start
* RI = (30 - 10 = 20) - 50 = -30 = No Delay @ Next Start
* RI = (20 + 30 - 10 = 40) - 50 = - 10 No Delay
* RI = (40 + 30 - 10 = 60) - 50 = + 10 Delay @ Start

45

Timer Performance

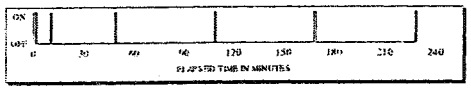

1 min

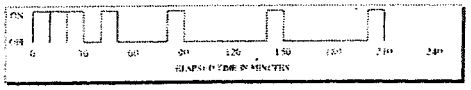

10 min

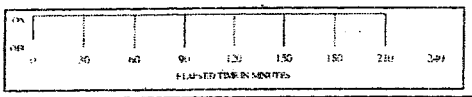

30 min

Machine Configuration Group

(Continued)

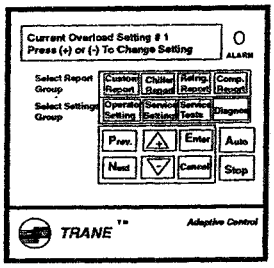

- Current Overload Setting # 1
  - Range 0 thru 31
- CT Factor = Actual RLA Divided by CT Meter Scale times 139
- CT Meter Scale = Primary Current of CT Divided by Number of Turns
- See Table in Appropriate IOM or CVHE - CLD - 1A
- Screen Supressed in FastPak w/o Starter Module

Machine Configuration Group

(Continued)

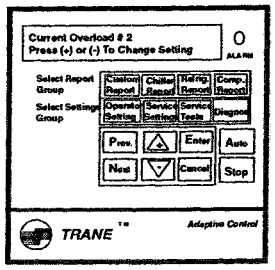

- Current Overload # 2
  - Range of Values 224 thru 255
- For Security Reasons, The Second Setting is the 8 Bit One's Complement of the First Setting
- Select Value From Table in Appropriate IOM
- Cannot be Changed From Remote CLD or Tracer

Setting Overload

RLA (900) / CT (1000) Scale X 100 = A Number

900 / 1000 = .90 X 100 = 90

Table 3 Scale - 90
Current Overload Setting #1 - 24
Current Overload Setting #2 - 231
Warning, These two numbers must always add up to 255: This is a computer binary code.

See Page 64,65 - CVHE - M-7

Binary Numbering Code

* 1 (2^0)
* 2 (2^1)
* 4 (2^2) 2 x 2
* 8 (2^3) 2 x 2 x 2
* 16 (2^4) 2 x 2 x 2 x 2
* 32 (2^5) 2 x 2 x 2 x 2 x 2
* 64 (2^6) 2 x 2 x 2 x 2 x 2 x 2
* 128 (2^7) 2 x 2 x 2 x 2 x 2 x 2 x 2
* 255

8-Bits

Binary #	1	2	4	8	16	32	64	128	=	255
24	0	0	0	1	1	0	0	0		
231	1	1	1	0	0	1	1	1		
	1	1	1	1	1	1	1	1		

Machine Configuration Group

(Continued)

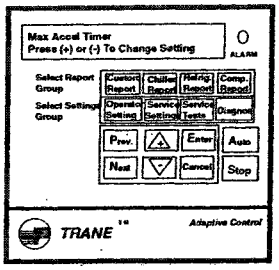

* Maximum Acceleration Timer # 1
  - Range of Values 224 thru 255
* For Security Reasons, The Second Setting is the 8 Bit One's Complement of the First Setting
* Select Value From Table in Appropriate IOM
* Cannot be Changed From Remote CLD or Tracer

52

Machine Configuration Group

(Continued)

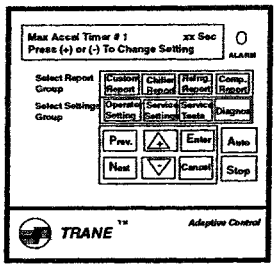

* Maximum Acceleration Timer # 1 Values
  - Variable Speed = 20
  - Y-Delta = 27
  - X Line = 6
  - Solid State = 20
  - Auto Transformer = 16
  - Primary Reactor = 11

53

Machine Configuration Group

(Continued)

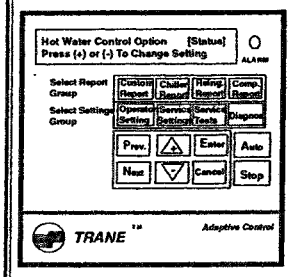

* Hot Water Control Option
  - Installed
  - Not Installed
* Control is Transferred to Hot Water Control
  - Controls From Leaving Condenser Water Temp
  - Evaporator Temperature is Allowed to Float
  - Typically Used When Evaporator Water is Taken From and Returned to a Lake, River etc.
* Does Not Appear if Compressor Power is "Engine Generator"

54

Machine Configuration Group

(Continued)

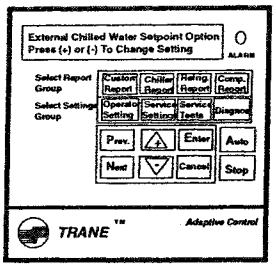

- External Chilled Water Setpoint Option
  - Installed
  - Not Installed
- Requires Options Module

Machine Configuration Group

(Continued)

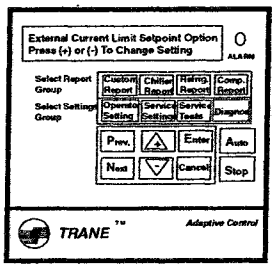

- External Current Limit Setpoint Option
  - Installed
  - Not Installed

Machine Configuration Group

(Continued)

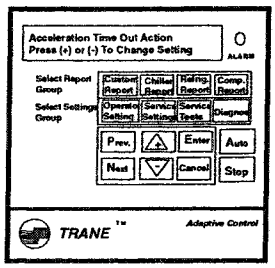

- Acceleration Time Out Action
  - Possible Values are Transition & Shutdown
  - If Shut Down is Selected, a MMR is issued if a Shutdown Occurs
  - If Transition is Selected an IFW Will Be Issued When Appropriate
- Not Available for FastPak w/o Starter Module

Machine Configuration Group

(Continued)

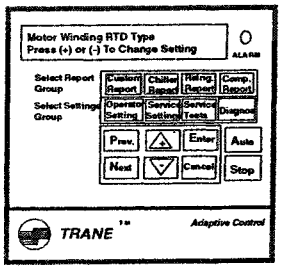

- Motor Winding RTD. Type (Resistive Temperature Device - linear Sensor)
  - Possible Values
  - 100 Ohm @ 0 C
  - 75 Ohm at 75 F
- Factory default is 75 Ohm at 75 F

58

Machine Configuration Group

(Continued)

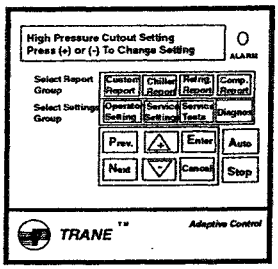

- High Pressure Cutout Setting (Vessel)
  - Range is -5 to 500 PSIG
  - Increments of 1 PSIG From -5 to +5
  - Increments of 5 PSIG From 5 to 500 PSIG
  - Factory default is 15 PSIG - Standard 25 PSIG - ASME

59

Machine Configuration Group

(Continued)

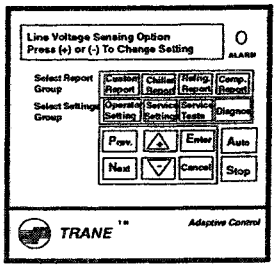

- Line Voltage Sensing Option
  - Values are Installed; Not Installed
  - Factory default is Not Installed
- Not Available On FastPak Units w/o Starter Module

60

Machine Configuration Group

(Continued)

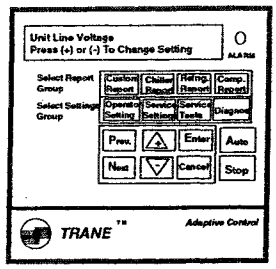

* Unit Line Voltage
  - Values = 180 through 6600 Volts in 5 Volt Increments
* ROM Default is 460 V
* Screen is Suppressed if Line Volt Sensing Option is Not Installed

61

Machine Configuration Group

(Continued)

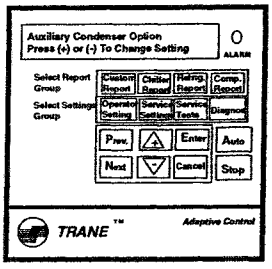

* Auxiliary Condenser Option
  - Possible Values are Installed & Not Installed
* Not Available for FastPak & Duplex Units

62

Machine Configuration Group

(Continued)

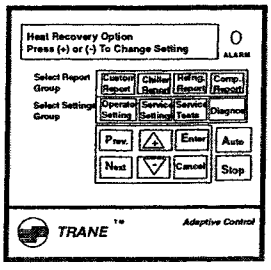

* Heat Recovery Option
  - Possible Values are Installed & Not Installed
* Not Available for FastPak & Duplex Units

63

Machine Configuration Group

(Continued)

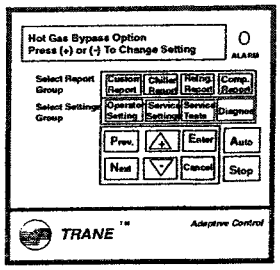

* Hot Gas Bypass Option
  - Possible Values are Installed & Not Installed
* Not Available for Duplex Units
* Inlet Guide Vane Output Must Be Set For: "Stepper Motor", If Not UCP-2 will Change it & Issue a Message

64

Machine Configuration Group

(Continued)

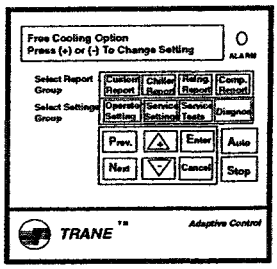

* Free Cooling Option
  - Possible Values are Installed & Not Installed
* Not Available for FastPak & Duplex Units

65

Machine Configuration Group

(Continued)

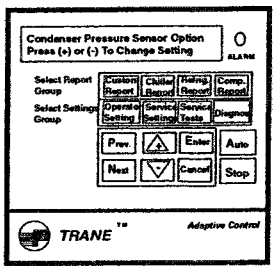

* Condenser Pressure Sensor Option
  - Possible Values are Installed & Not Installed
* Must Have Optional Condenser Pressure Transducer

66

Machine Configuration Group

(Continued)

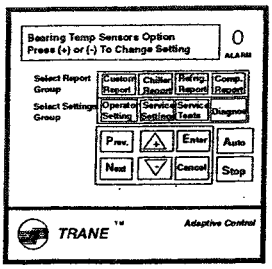

* Bearing Temperature Sensor Option
  - Value - Installed or Not Installed
* Two Temperature Sensors Installed In Oil Return Lines
* Trip Value = 180°
* Default Value = Not Installed

67

Machine Configuration Group

(Continued)

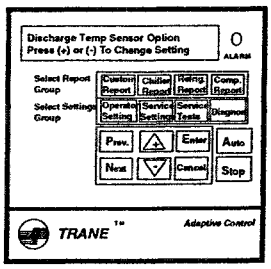

* Discharge Temperature Sensor Option
  - Values - Installed or Not Installed
* Sensor is Recommended if Hot Gas Bypass is Used to Prevent Stressing "O" Rings
* Diagnostic @ 200°

68

Machine Configuration Group

(Continued)

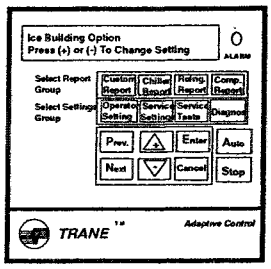

* Ice Building Option
  - Values are Installed or Not Installed
* Not Available on Duplex Units
* Unit Operates @ 100% Load During Ice Making

69

Machine Configuration Group

(Continued)

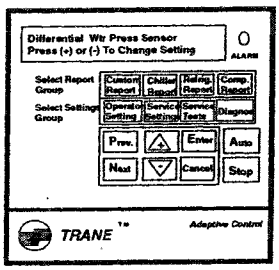

- Differential Water Pressure Sensing Option
  - Value - < 150 Psig, Installed or Not Installed
- Water Pressure is Measured on Incoming Water Line & Exiting Line
- UCP Processes Signals thru 2 Relays
- Entering Water is Measured @ De-energized

70

Machine Configuration Group

(Continued)

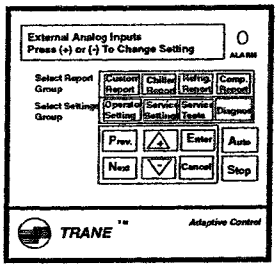

- External Inputs
  - Values 4-20 mA or 2 - 10 VDC
- Default Setting is 4-20 mA

71

Machine Configuration Group

(Continued)

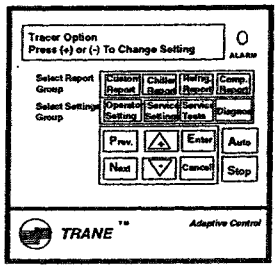

- Tracer Option
  - Values Installed or Not Installed
- If Communication is Established With a Tracer, It will Automatically be Installed

72

Machine Configuration Group

(Continued)

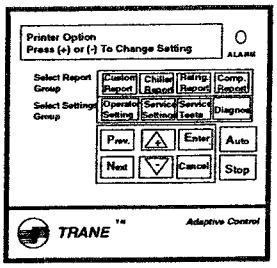

- Printer Option
  - Value - Installed or Not Installed
- Printer within 50 Feet of the UCP
- Can be Utilized for Diagnostic Purposes

73

Machine Configuration Group

(Continued)

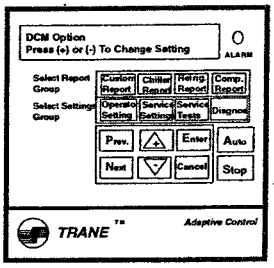

- Duplex Control Module (DCM) Option
  - Value = Installed or Not Installed
- Duplex Chiller Requires an Additional Module to Coordinate Control of Two Compressors
- Will Automatically Install When Communication is Established

74

Duplex Chiller

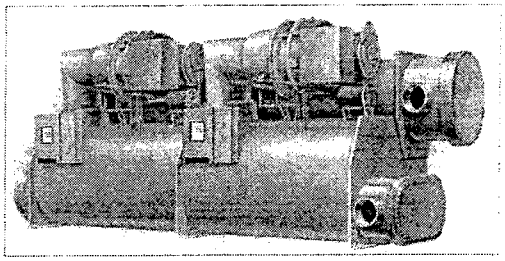

75

Duplex Chiller Control

The Duplex Chiller Contains Two Full UCP2 Panels for the Control of Each Compressor

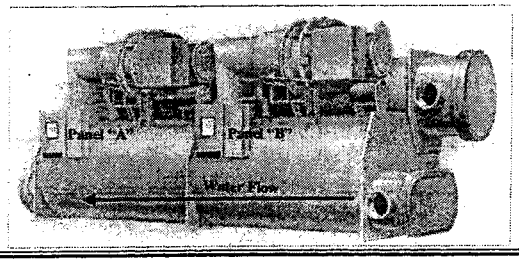

76

Features Not Supported on Duplex

* Ice Making
* Hot Water Control
* Hot Gas Bypass
* Free Cooling
* Base Loading
* Chilled Water Reset

77

Duplex Staging

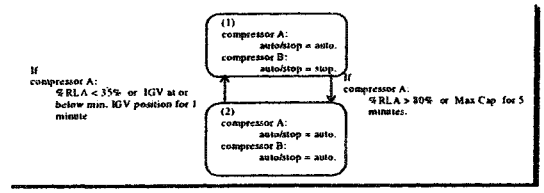

78

Control Strategy

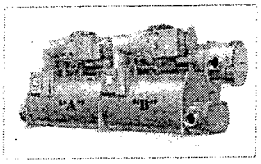

* Compressor "A" Starts & is Allowed to Load
* When Compressor "A" is at 80% of RLA for five Minutes, Compressor "B" Starts
* Compressor "A" Unloads & Both Compressors Share Load Equally
* When Compressor "A" is Operating at 35% RLA, Compressor "B" is Shut Down

79

Example

* 16° ▲T Chiller (42° / 58°)
* 8° ▲T Each Circuit
* 600 RLA Each Compressor

* CWSPB = RA (EEWT - CWSP) + CWSP
* RA = 8/16 or RA = .5
* CWSPB = .5 x (58 - 42) + 42 = 50°

* Same Chiller Operating @ 10° ▲T (42 / 52)

* CWSPB = .5 x (52 - 42) + 42 = 47°

80

Example

* 16° ▲T Chiller (42° / 58°)
* 8° ▲T Each Circuit
* 600 RLA Each Compressor

* $VELWTB = \frac{(\%RLA_A \times RLA_A)}{\%\ RLA_A \times RLA_A + \%\ RLA_B \times RLA_B} (EEWT - ELWT) + ELWT$

* $VELWTB = \frac{100\% \times 600}{100\% \times 600 + 100\% \times 600} (58 - 42) + 42$

* VELWTB = .5 x (58 - 42) + 42 = 50°

81

Same Chiller Operating @ 10° ▲T (42 / 52)

Compressor A = 450 Amps (75% of RLA)
Compressor B = 300 Amps (51% of RLA)

* $VELWTB = \frac{(\%RLA_A \times RLA_A)}{\%\ RLA_A \times RLA_A + \%\ RLA_B \times RLA_B} (EEWT - ELWT) + ELWT$

* $VELWTB = \frac{75\% \times 600}{75\% \times 600 + 51\% \times 600} (52 - 42) + 42$

* VELWTB = .6 x (52 - 42) + 42 = 48°

82

Virtual Leaving Water Temperature - Compr "B"

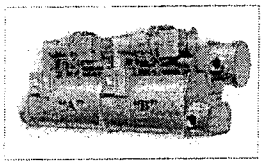

* Circuit "B" Does Not Have a Leaving Water Temperature Sensor
* DCM Must Calculate a Virtual Leaving Water Temperature (VELWTB)

$VELWTB = \frac{(\%RLA_A \times RLA_A)}{\%\ RLA_A \times RLA_A + \%\ RLA_B \times RLA_B} (EEWT - ELWT) + ELWT$

83

Machine Configuration Group

(Continued)

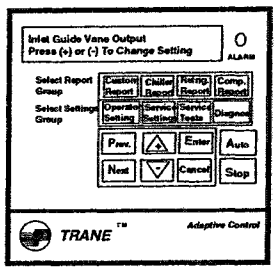

* Inlet Guide Vane Output
  - Possible Values are:
  - Stepper Motor
  - Pulsed (Induction Motor)
* If Machine is Equipped with Hot Gas Bypass, and IGV Output is Changed to "Pulsed", the Micro Will Un-Install HGB

84

Machine Configuration Group

(Continued)

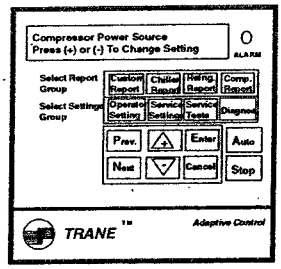

* Compressor Power Source for CVHE/F/G/B ONLY
  - Choices:
  - Utility
  - Engine/Generator

85

Service Settings

(Basic Setups)

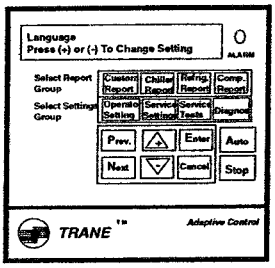

* Language Settings
  - English (Factory ROM Default)
  - Francais (French)
  - Deutch (German)
  - Espanol (Spanish)
  - Nippon (Japanese)
  - Italiano (Italian)
  - Nederlands (Dutch)
  - Portuguese

86

Service Settings

(Basic Setups)

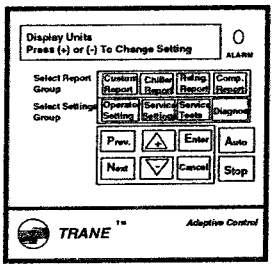

* Display Units
  - English (Factory ROM Default)
  - SI

87

Service Settings

(Basic Setups)

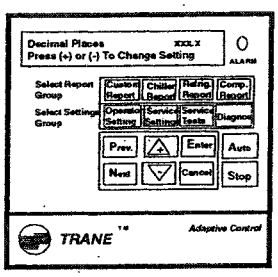

* **Decimal Places**
  - **XXX.X (Factory ROM Default)**
  - **XXX.**

Service Settings

(Basic Setups)

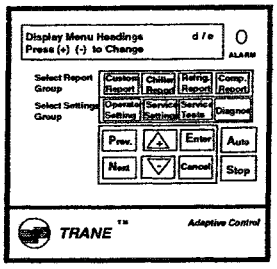

* **Display Menu Headings**
  - **Enable**
  - **Disable**
* **If Disabled, the Menu Headings in Each Menu or Group Will be Suppressed**

Service Settings

(Basic Setups)

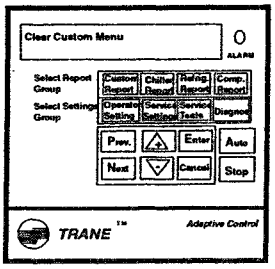

* **Clear Custom Menu**
  - **When "Enter" Is Pushed, "Custom Menu Has Been Cleared" Appears for Two Seconds**

Service Settings

(Basic Setups)

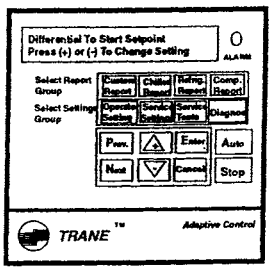

* **Differential To Start Setpoint**
  - Range is 0 TO 10 F
  - Factory Preset = 5
* **Differential To Stop Setpoint**
  - Range is 0 To 10 F
  - Factory Preset = 5

Warning: This Setting Will Control With Low Water and Refrigerant Temperature Limits.

91

Service Settings

(Basic Setups)

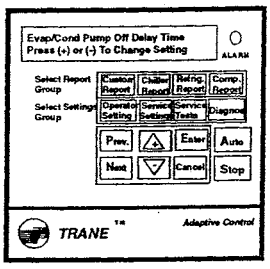

* **Pump Off Delay**
  - Range = 1 - 30 Minutes
* **If Mode is "Hot Water Control" Then Item is Condenser Pump Off Delay**

92

Service Settings

(Basic Setups)

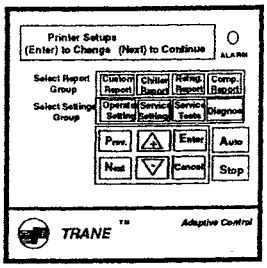

* **Printer Setups**
  - Print on Time Interval-enable
  - Print Interval Time-hours
  - Print on Diagnostic-enable
    OR
  - Number of Pre-diag.-Reports
  - Pre-diagnostic Reports-interval
  - Printer Baud Rate-300
  - Printer Parity-none
  - Printer Data Bits-8
  - Printer Stop Bits-1
  - Printer Hand Shaking-xon/xoff

93

Service Settings

DEFAULT:
No. of Reports = 5
Interval = 5 Sec

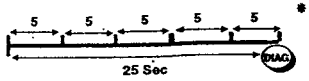

Benefit: This feature freezes "pictures" of system conditions at preset time intervals leading up to a diagnostic shutdown.

- Print on Diagnostic
  - Enable (Default) /Disable
- Number of Pre-Diagnostic Reports
  - Range: 1 – 5
  - Default: 5
- Diagnostic Report Interval
  - Range: 2 – 120 Seconds
  - Default: 5 Seconds

Service Settings

Printing On A Diagnostic (Cont'd.)

MAXIMUM WINDOW:
No. of Reports = 5
Print Interval = 120 Sec

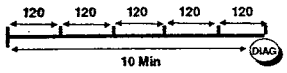

SMALL WINDOW:
No. of Reports = 5
Print Interval = 2 Sec

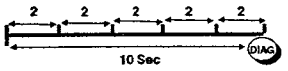

Printed Report

- Operating Mode
- Current Diagnostic
- Primary Control Mode
- Active Chilled Water S.P.
- Setpoint Source
- Current Limit Setpoint
- Setpoint Source
- Compressor Motor Status
- Run Hours
- Starts
- Current Draw
- Discharge Refrig Temp
- Voltage AB, BC & AC
- Avg Voltage
- Voltage Unbalance
- Amperage L1, L2 L3
- Average Amperage
- Amperage Unbalance
- Bearing Temp # 1
- Bearing Temp # 2
- Oil Tank Temperature
- Oil Tank Pressure
- Discharge Oil Pressure
- Differential Oil Pressure

Printed Report

(Continued)

- Motor Winding Temp
  - W-1, W-2, W-3
- Leaving Evap Water Temp
- Entering Evap Water Temp
- Delta Water Temperature
- Differential Water Pressure
- Approx Evap Water Flow
- Evap Refrigerant Temp
- Evap Approach Temp
- Evap Refrigerant Pressure
- Evap Approx Capacity
- Cond Leaving Water Temp
- Cond Entering Water Temp
- Cond Water Delta Temp
- Cond Diff Water Pressure
- Approx Cond Water Flow
- Cond Refrigerant Temp
- Cond Approach Temp
- Cond Refrigerant Pressure
- Purge Status
- Purge Suction Temp
- Purge Liquid Temp
- Last 24 Hr Pumpout Duration

97

Service Settings

(Basic Setups)

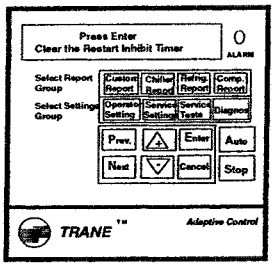

- **Clear Restart Inhibit Time**
  - For Service Engineers Only
  - Very Dangerous To The Equipment
    - Eliminates The 30 Minute Anti-Recycle Timer
    - A Second Screen Line Appears For 2 Seconds, Stating Restart Inhibit Timer Has Been Cleared

98

Service Settings

(Field Start Up)

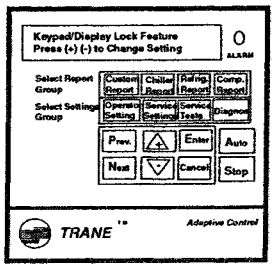

- **Keypad Lock**
  - Disables Keypad Including "Stop" Button
  - Selections: Enable or Disable
- **Press Previous & Enter to Unlock**

99

Service Settings

(Field Start Up)

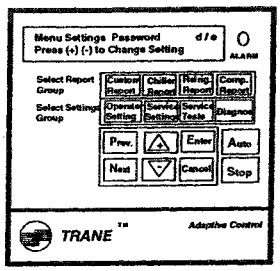

* Menu Settings Password Feature
  - Permits the "Settings" in Each Menu to Be Password Protected
  - Menus can Still be Viewed but Changes Cannot be Made

100

Service Settings

(Field Start Up)

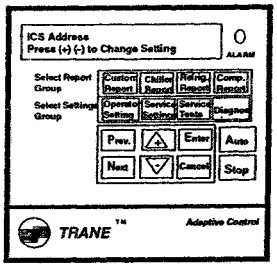

* ICS Address = Integrated Comfort System
  - 6 - Ctv's to 1 Tracer, Summit, Chiller Plant Manager
  - ICS "DIP switch" settings are in UCP2 software
  - Point Type 42

101

Service Settings

(Field Start Up)

Tracer Address List

Name	Point Type	Address
Rooftop	09	1
VAV	25	35
CTV	42	65

* Tracer 100 Address Assignment 01 - 127 (65 is the default)
* Warning Refer to Current Tracer Programming Guide

102

Service Settings

(Field Start Up)

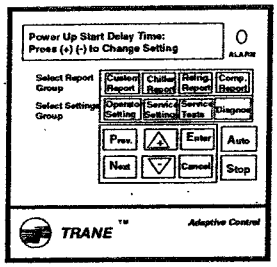

* **Power Up Time Delay**
  - Delays Start Up Of Chiller by Programmed Amount After a Power Outage
* **Range:**
  - 0 to 600 Seconds in Increments of 1 Minute
  - Multiple Chiller Delay Time

103

Service Settings

(Field Start Up)

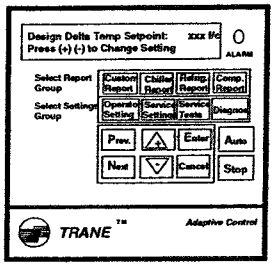

* **Design Temperature Delta "T"**
  - See Chiller Order Specs. (4 to 30 F)
  - Factory Preset is 10 F

104

Service Settings

(Field Start Up)

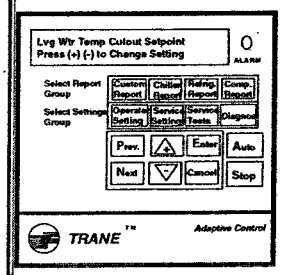

* **Leaving (Low) Water Temperature Cutout Setpoint (-10 to 36 F)**
  - A 1.7 F. Null Zone exists between the Chilled Water Setpoint and the Low Water Temperature cutout setpoint :

Chilled Water Setpoint	37.0	F
Low Water Temp. Setpoint	35.3	F
Differential is	1.7	F

* **If Setpoint is Adjusted Below 35.3°, "Warning: Adequate Antifreeze Required"**

105

Service Settings

(Field Start Up)

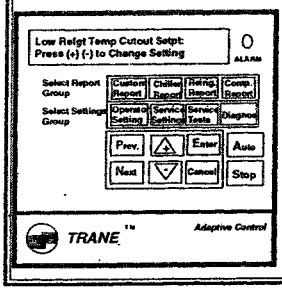

- Low Refrigerant Temperature Cutout Setpoint (-35 to 36 F)
  - A 6 F. Null Zone exists between the Chilled Water Setpoint and the Low Refrigerant Temperature cutout setpoint.

    Chilled Water Setpoint. 37 F
    Low Refrigerant Temp. Setpoint 31 F
    Differential is 6 F
- If Setpoint is Adjusted Below 28.5°, "Warning: Adequate Anti-freeze Required"

106

Freeze Protection

Evaporator Refrigerant Temperature Cutout

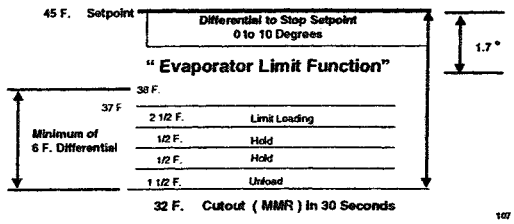

107

Service Settings

(Field Start Up)

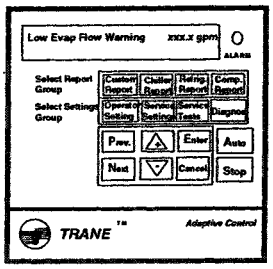

- Low Flow Warning
- Must Have Differential Water Sensing Option Installed
  - Range: 0.0 to 4.0 GMP/Ton in Increments of 0.1 GPM

108

Service Settings

(Field Startup Group)

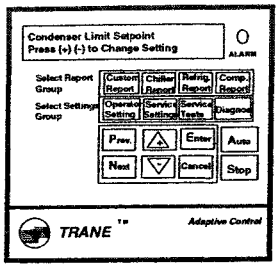

* **Condenser Limit Setpoint**
  - High Pressure Cutout
  - 80 to 120%
  - Factory default is 93%
    120% of 15 = 17 PSIG

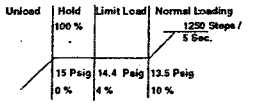

109

Service Settings

(Field Startup Group)

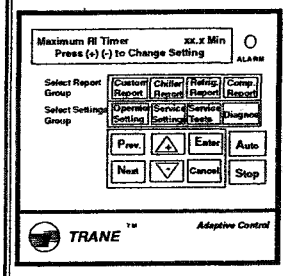

* **Maximum Restart Inhibit Setting**
  - 30 to 60 Minutes
  - Factory Default Is 60 Minutes
  - Used to Prevent Motor Overheating
  - The BI Timer Is Based on the Size of the Unit. The Minimum Time Is 30 Seconds to 60 Minute Depending on the Motor Heat (165 F.)
  - Turn to Page 63 of CVHE-M-7B and Page 78
* **Purge Control Type**
  - Micro Purge / Stand Alone Purge

110

SERVICE SETTINGS

(Field Startup Group)

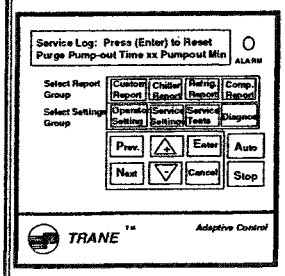

* **Service Log - Press Enter to reset**
  - Purge pumpout time 9999.9 min.
* **Service Log - Press Enter to reset**
  - Time since last reset 9999.9 days
* **Purge Maximum Pumpout Rate**
  - 1 to 100 min / 24 hrs.
  - Factory default is 20 min. / 24 hrs.
* **Purge Disable Pumpout Alarm**
  - Is a service tool.Can be set up to 72 hours in 1 hr. increments

111

SERVICE SETTINGS

(Field Startup Group)

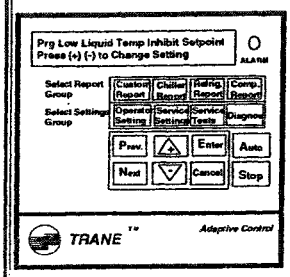

- Purge Low Liquid Temp. Inhibit
  - Factory default is enable
- Purge Low Liquid Temp Inhibit Setpoint
  - Range of Value is 32 to 50° F
  - ROM Default is 40 ° F
  - Not Available on Stand Alone Purge Unit

SERVICE SETTINGS

(Field Startup Group)

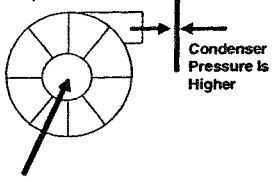

- Surge Protection
  - Looks at current fluctuations (2 [Was 5] in 60 seconds)
  - Measures the current change intensity (RMS current change of 1.3/1 [Was 1.4/1] within .8 second)
  - Measures the intensity for 15 minutes and Energizes the Head Relief Relay
  - After 15 Minutes - shuts the machine down
  - Factory ROM default is enabled

SERVICE SETTINGS

(Field Startup Group)

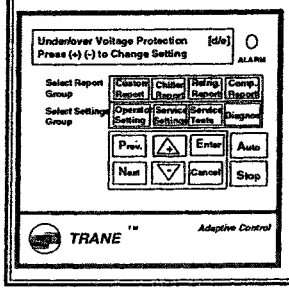

- Under / Over Voltage Protection
- Only Active if The Line Voltage Sensing Option Has Been Installed
  - Selection Options: Enable or Disabled
  - ROM Default = Disable

SERVICE SETTINGS

(Field Startup Group)

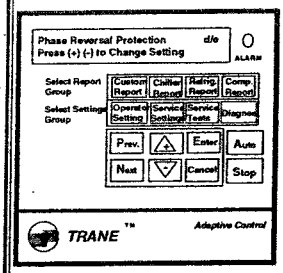

* **Phase Reversal Protection**
  - Clockwise Rotation Only
  - Will trip in 0.3 second after the compressor starts
  - Factory ROM default is Enable

115

SERVICE SETTINGS

(Field Startup Group)

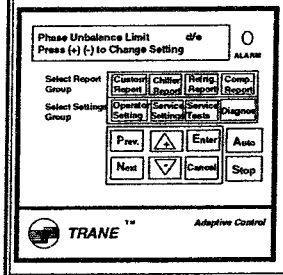

* **Phase Unbalance Limit**
  - Derates Motor After 15%
  - Ultimate Trip point 30% (Used to be 25%)
  - Time to trip = 30 Sec.
  - Individual sensing error 3% or 6% phase-to-phase
  - Factory ROM default is Enable

116

RLA De-rate Vs Percent Motor Current

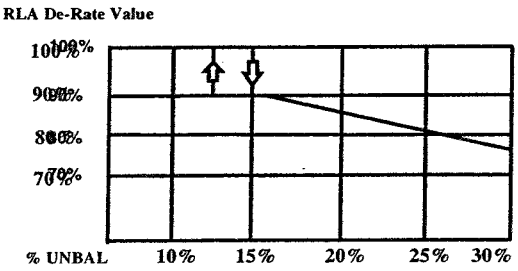

117

SERVICE SETTINGS

(Field Startup Group)

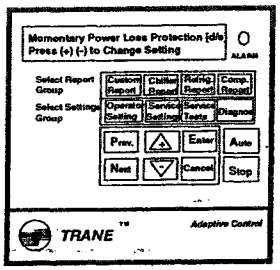

* Momentary Power Loss
* Actually Determining if The Motor is Consuming Power or Generating Power
  - 2 Cycles Trigger- 6 Cycles Stop
  - Factory ROM default is Enable
* Screen is Suppressed if Starter Type is AFD

118

Momentary Power Loss

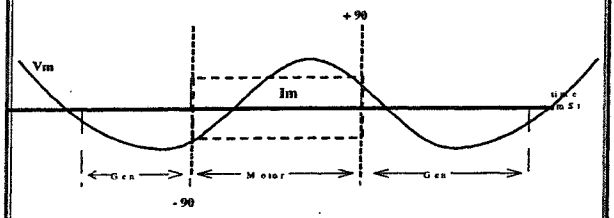

If Phase of Im +/- 90 Degrees Respect to Vm, It Is in the Motor Region

119

Momentary Power Loss

(CONTINUED)

* Looks at Relationship Between Voltage & Current
* Uses V (ab) & I [c] to Determine Power Flow
* V (ab) is Obtained From the 24 VAC Control Transformer
* I [c] is Obtained From CT Output
* Power Transformer Must be Wired to Proper Phases (Verify Wire Numbers by Use of Wiring Diagram)
* Polarity to Starter Module Must be Correct
* C/T Wiring Must be Correct

120

Service Settings

(Field Startup Group)

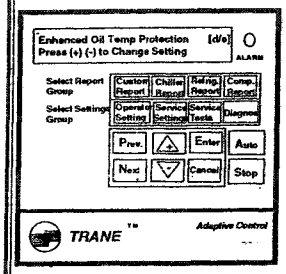

- **Enhanced Oil Protection**
- **CHVE/F/G/B, FastPak Wtr, CVGE & CVGF**
  - Selections: Enable or Disable
  - ROM Default = Enable
- **Sets Low Oil Temperature Cutout at 30° F Above Saturated Suction Temp or 100° F, Whichever is Higher**

121

Service Settings

(Field Startup Group)

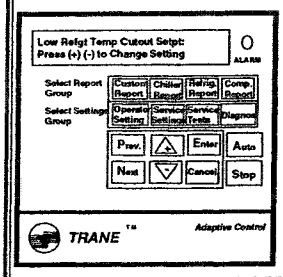

- **Oil Temperature Setpoint**
  - 100 to 160 F
  - Factory ROM default is 143° F
- **Low Oil Temperature Setpoint**
  - 80 to 140 F
  - Reset 5 F above setpoint
  - Factory setpoint is 95 F
- **Screen Suppressed When Enhanced Oil Protection is Enabled**

122

Service Settings

(Field Startup Group)

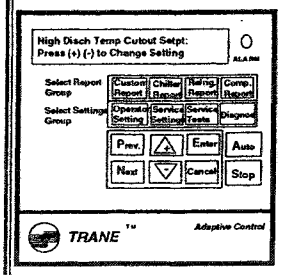

- **High Discharge Temperature Cutout**
  - Range of Values: 170 to 220°
  - Factory Pre-Set 200°
- **Not Available On Duplex**

123

Service Settings

(Field Startup Group)

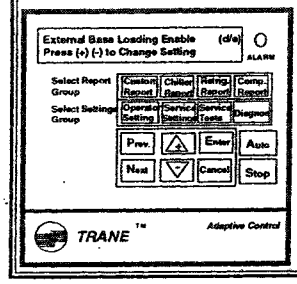

* **External Base Loading**
  - Base Loading Allows an Analog Signal to Send a Signal to Chiller to Meet a Predetermined Current Setting
  - IE: Set Load to 80% Current Limit - Chiller Goes to 80% Without Regard to Normal Load Signals
* **Default Is Disable**
  - 4 To 20 Ma.
  - 0 To 10 Vdc
  - Dip Switch Setting

124

Service Settings

(Field Start Up)

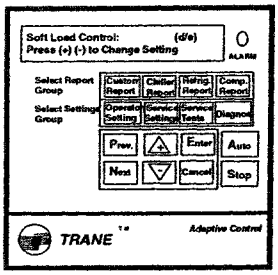

* **Soft Loading Control Enable**
  - Used to Prevent Over-current Fast Start Operation
  - Avoids Overshooting of Setpoint
  - Stabilizes Startup of Short Loop Water Systems
  - Factory Default Is Disable
* **Soft Load Starting Current Limit Setpoint** (CLS)
  - Adjustable From 40 to 100%
  - Adjustable in 1% Increments
  - Factory Default Is 100%

125

Service Settings

(Field Startup Group)

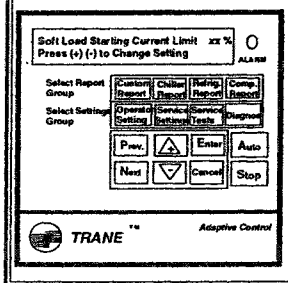

* **Soft Load Current Limit Rate of Change**
  - Adjustable From 0.5 to 5% Per Minute
  - Factory Default Is 5% Per Minute
* **Soft Load Leaving Water Temperature Rate of Change**
  - Adjustable From 0.5 to 5 F Per Minute
  - Adjustable in 0.1 to 1.0 F Per Degree

126

Service Settings

(Field Startup Group)

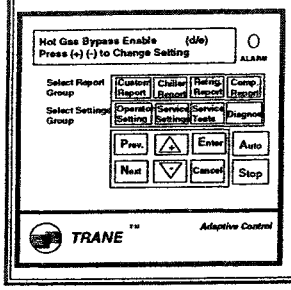

* Hot Gas Bypass Enable
  - Eliminates Short Cycling Due to Light Load Chiller Operation
  - Provides a False Load to the Evaporator
  - Factory Default Is Disable
* Hot Gas Bypass Timer
  - Selections: Enable/disable
  - Factory Default Enable

127

Service Settings

(Field Startup Group)

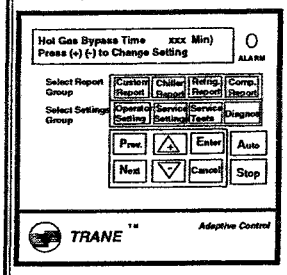

* Maximum HGBP Time
  - Values: 1 to 480 Minutes
* HGBP Mode IGV Target
  - After Hot Gas Bypass Mode is Entered, the IGV will "Tic" to This Setting
  - Range of Values: 0 to 30%

128

Hot Gas Bypass

* Must be Installed (Config)
* Must be Enabled (Thru Field Start Up or Tracer)
* Vanes Must be Either "Fully Closed" or "Guide Vane Closed Travel Stop" Which Ever is Larger
* When Chiller Water Temperature is .5° Below Setpoint, Mode will Change to Hot Gas Bypass
* Vane Actuator will "Tic" to "HGBP Mode IGV Target"
* Hot Gas Bypass is Active for Period Not to Exceed Maximum HGBP Time
* When Chilled Water Temperature Rises .5° above Setpoint, Hot Gas Bypass Mode will be Exited
* Limits & Differential to Stop are Active

129

Service Settings

(Field Startup Group)

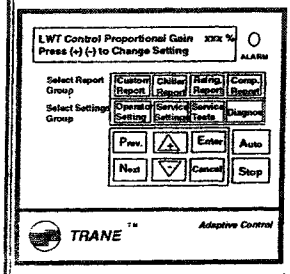

* **Leaving Water Temperature Control Proportional Gain**
  - **Range - 0 to 100%**
  - **Factory Setting 10.0%**

130

Service Settings

(Field Startup Group)

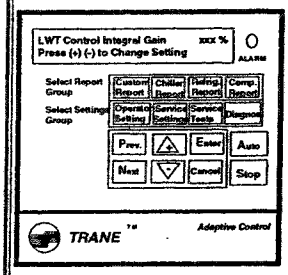

* **Leaving Water Temperature Control Derivative Gain**
  - **Range 0 to 1 %**
  - **Factory Setting - 0.110%/F**

131

Service Settings

(Field Startup Group)

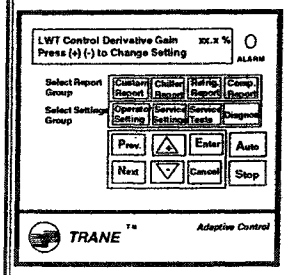

* **Leaving Water Temperature Control Derivative Gain**
  - **Range 0 to 10.0%**
  - **Factory Setting - 0.0%**

132

Service Settings

(Field Startup Group)

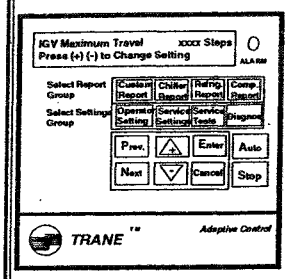

* Inlet Guide Vanes (IGV) Maximum Travel Setpoint
  - Stepper Motor
  - Range 0 to 60,000 Steps
  - Increments of 100 Steps
  - Machine Specific Set @ Factory
* IGV Closed Travel Stop
  - Range Is 0 to 30%
  - Factory Default Is 0%
* Screens Are Only Displayed If IGV Output Is Selected As "Stepper Motor"

Service Settings

(Field Start Up Group)

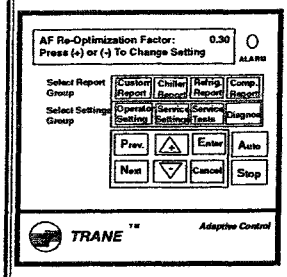

* AF Re-Optimization Factor
  - Select: AF Re-optimization Factor
  - Enter: 0.30
* Determines Distance From Surge Line Before Optimization Begins Again
* Too Large a Value Will Delay Optimization

Service Settings

(Field Start Up Group)

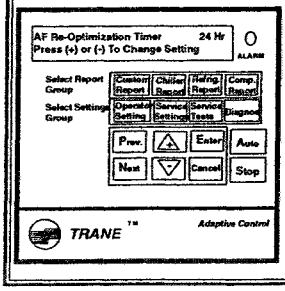

* AF Re-optimization Timer
* Establishes Time for the Removal of the Surge Flag
  - Select: Enter: 24 Hrs

Service Settings

(Field Start Up Group)

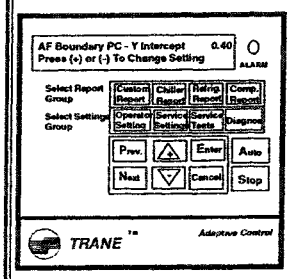

* Select: AF Boundary PC - Y Intercept
  - Enter: 0.40
* Used to Locate the Boundary Pressure Coefficient

136

Service Settings

(Field Start Up Group)

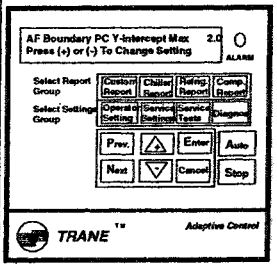

* AF Boundary PC-Y Intercept Maximum Setting
  - Enter: 2.0
* Intercept Is Never Allowed to Exceed This Value

137

Service Settings

(Field Start Up Group)

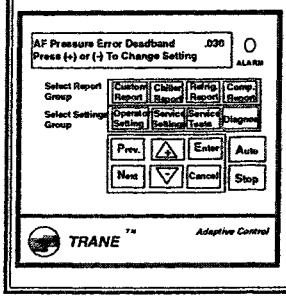

* AF Pressure Error Deadband
  - Enter: 0.30
* Defines a Region Where No Background Decreases Will Occur

138

Service Settings

(Field Start Up Group)

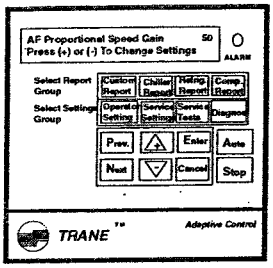

* AF Proportional Speed Gain
  - Enter: 50
* Used to Convert the Pressure Error to Difference in Hz

139

Service Settings

(Field Startup Group)

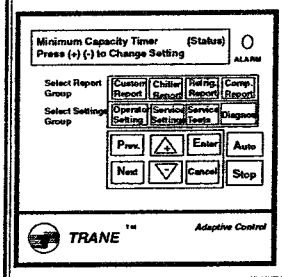

* Minimum Capacity Timer
* Non AFD Chillers, Timer Times Out When Chiller Is at Minimum IGV Position & LWT < Setpoint
* AFD Chillers, Timer Times Out When Chiller Is at Minimum Speed or Minimum IGV Position
  - Values: Enable or Disable

140

Service Settings

(Field Startup Group)

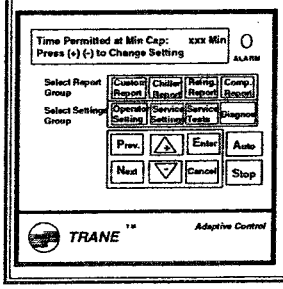

* Time Permitted at Minimum Capacity
  - Range: 1 to 480 Minutes in 1 Minute Increments

141

Service Settings

(Field Startup Group)

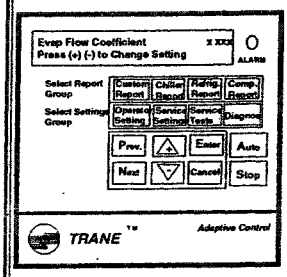

- ✱ Evaporator Flow Coefficient
  - Range 0 to 3,000
  - Factory Setting 1,000

142

Service Settings

(Field Startup Group)

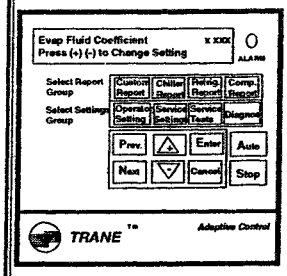

- ✱ Evaporator Fluid Coefficient
  - Range 0 to 1,000
  - Factory Setting 600

143

Service Settings

(Field Startup Group)

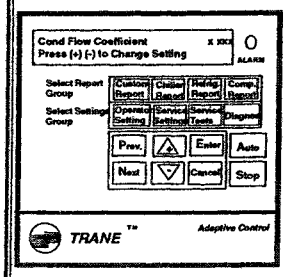

- ✱ Condenser Flow Coefficient
  - Range 0 to 2,000
  - Factory Setting 500

144

Service Settings

(Field Startup Group)

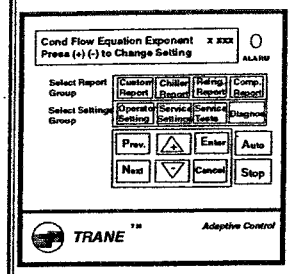

* **Condenser Flow Equation Exponent**
  - Range 0 to 1,000
  - Factory Setting 600

145

Service Settings

(Field Startup Group)

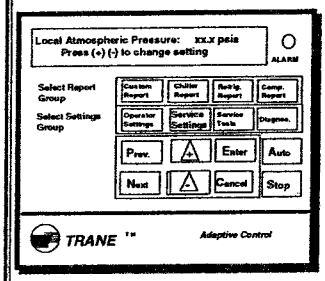

* **Local Atmospheric Pressure**
  - Range is 10 to 16 PSIA
* **Is Used for the Conversion of Temperature to Pressure**
* **Factory default is 14.7 PSIA**

146

Altitude & Temperature

PSIG	°F @ SEA LEVEL	°F @ 5000 FEET
50	26	24
52	28	25
54	29	27
56	31	29
58	32	30
60	34	32
62	35	33
64	37	35
66	38	37
68	40	38

What is Absolute Pressure for 38 Degrees at Each Altitude??

66 Psig + 14.7 = 80.7 Psia @ Sea Level

68 Psig + 12.2 = 80.2 Psia @ 5,000 Feet

147

To Calculate Atmospheric Pressure

$$14.7 - \frac{\text{(Local Elevation)}}{2{,}000}$$

EXAMPLE:

$$14.7 - \frac{5000}{2000} = 12.2$$

Service Settings

(Field Startup Group)

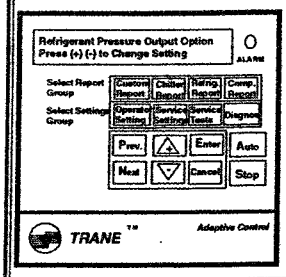

- Refrigerant Pressure Analog Output
  - Range of Values: % Cond Pressure or Delta
- Screen is Suppressed for FastPak

Service Settings

(Field Startup Group)

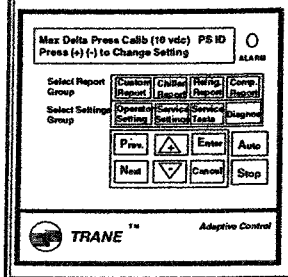

- Minimum Delta Pressure Calibration
  - Pressure Differential Where a 2 Vdc Output Is Required
  - Range of Value: 0 - 400 Psid
- Maximum Delta Pressure Calibration
  - Pressure Differential Where a 10 Vdc Output Is Required
  - Range of Value 0 - 400 Psid

Service Settings

(Field Startup Group)

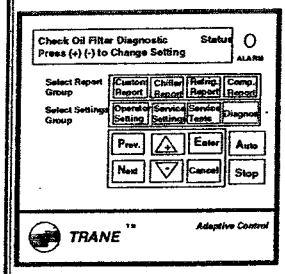

- **Check Oil Filter Diagnostic**
- **Only Displayed If Oil Pressure Transducers Are "Installed" (Fastpak)**
  - Selections: Disable or Enable
- **Check Oil Filter Setpoint**
  - Values 9 to 60 PSID in 1 PSID Increments
  - ROM Default Is 15 Psid

151

Service Settings

(Field Startup Group)

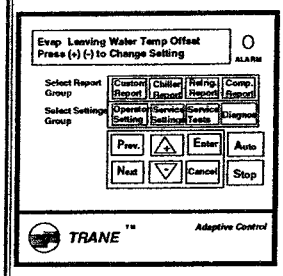

- **Evaporator Leaving Water Temperature Offset:**
  - Possible Values: -2.0 to 2.0 F in 0.1 F Increments
  - Not Available on FastPak
- **Saturated Evaporator Refrigerant Temperature Offset**
  - Possible Values: -2.0 to + 2.0 F

152

Service Settings

(Field Startup Group)

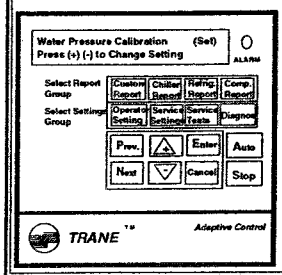

- **Water Pressure Calibration**
  - Values: Auto or Manual
- **Measured Evap Differential Water Pressure**
  - Possible Values: 0 to 25 PSID
  - Allows for Calibration
- **Measure Cond Differential Water Pressure**
  - Possible Values 0 to 25 PSI
- **Enter measured differential and Value will Return to 0 After Calibration**

153

SERVICE TESTS MENUS

154

Service Tests

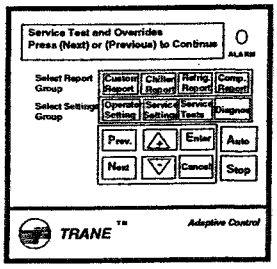

* Service tools Group Heading
  - This heading will remain if other headings are suppressed in the Service Settings Menu

155

SERVICE TESTS

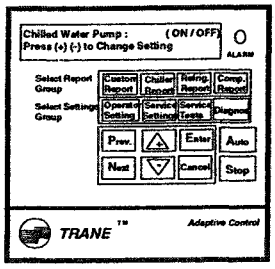

* Chilled Water Pump
  - Values are ON, AUTO
* Allows for Commanding the Chilled Water Pump On
* Chilled Water Pump Control Circuit Must be Wired to Chiller Module

156

SERVICE TESTS

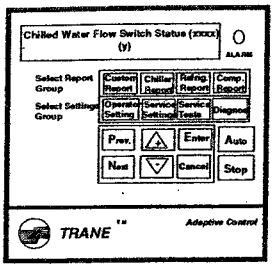

* Chilled Water Flow Switch Status
  - Values are:
    - Flow Switch is Open / No Flow
    - Flow Switch is Closed / Flow

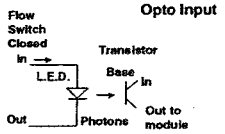

157

SERVICE TESTS

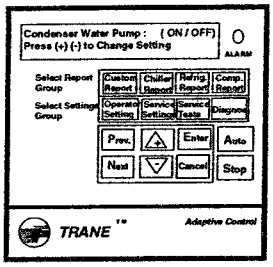

* Condenser Water Pump
  - Values are ON, AUTO
* Allows for Commanding the Condenser Water Pump On
* Pump Control Circuit Must be Wired to The Chiller Module

158

SERVICE TESTS

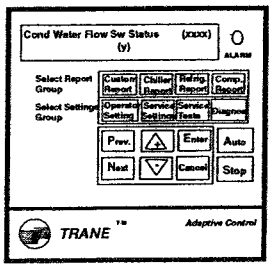

* Condenser Water Flow Switch Status
  - Values are:
    - Flow Switch is Open / No Flow
    - Flow Switch is Closed / Flow

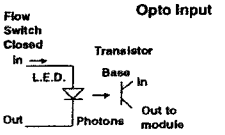

159

SERVICE TEST GROUP

Starter Dry Run :	(XX)
Press (+) (-) to Change Setting: Transition Complete Input (Y)	

* Starter Dry Run
  - Factory default is disable
  - Unit must be in STOP to activate test
  - Values for XX are:
    - Shorting Relay On
    - Run Relay On
    - Start Relay On
    - Transition Relay On
    - Start and Transition Relays On
  - Values for Y are:
    - Closed = TCI is seeing a contact closure
    - Open = TCI is seeing a contact open
    - Y - Values will change on machine operation

160

SERVICE TEST GROUP

Oil Pump :	(Status)
Differential Oil Pressure	XX.X PSID:

* Oil Pump
  - Values are ON or AUTO
  - Factory default is AUTO
  - Differential Oil Pressure is Active and will change

161

SERVICE TEST GROUP

Vane Control is :	(Status)
Press (+) (-) to Change Setting:	

* Vane Control Status and Vane Position Commands
  - Values are: MANUAL and AUTO
  - Factory default is AUTO
  - Can operate with unit off
* Inlet Guide Vane Position if in the Manual Mode
  - Value is XXX.X % OPEN
  - Second Line Information is Limit Mode
    - Limit Mode Values are:
      - Current limit
      - Condenser Limit
      - Evaporator Limit

Inlet Guide Vane Position :	XXX.X % Open
(Limit Mode)	

Vane Position XXX.X %	Target XXX.X % Open
(Limit Mode) (+) (-) to Change Target	

Inlet Vane Guide Position :	XXXX Steps
Inlet Guide Vane Position :	xx.x Degrees

162

SERVICE SETTINGS

(Field Startup Group)

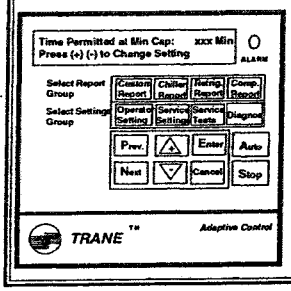

163

REPORTS

Reports Reports

Reports Reports

Reports Reports

164

CUSTOM REPORTS

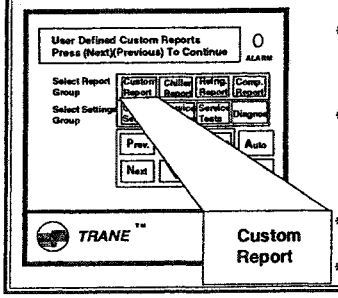

* Can Contain Maximum of 20 Records Customized By You
  - Use + And - Keys To Add Or Delete Records
* Local / Remote CLDs Can Display Different Records / Commands Simultaneously
  - 2 People Can Be Viewing / Entering / Deleting Records
* Will Not Loose Memory on Power Failure
* Will Not Print Out- View Only

CHILLER REPORT

CVHE **CVHF**

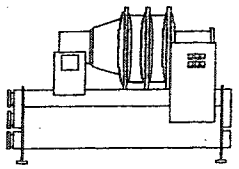

CHILLER REPORT

- *Active Chilled Water Setpoint/ Evaporator Leaving Water Temperature
- *Active Chilled Water Setpoint/ Chilled Water Setpoint Source
- *Active Ice Termination Setpoint/ Ice Termination Setpoint Source
- *Evaporator Entering And Leaving Water Temperatures
- *Condenser Entering And Leaving Water Temperatures
- *Active Current Limit Setpoint
- *Active Current Limit Setpoint/ Current Limit Setpoint Source
- *Evaporator Water Flow/ Condenser Water Flow
- *Chiller Tons
- *Outdoor Temperature
- *Auxiliary Bundle Or Heat Recovery Temperatures
- *Chilled Water Setpoint Source
- *Current Limit Setpoint Source
- *Hot Water Setpoint Source
- *Ice Termination Setpoint Source

CHILLER REPORT

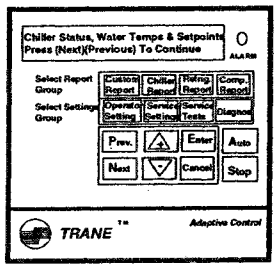

- When first pressed, the CLD displays the Chiller Report Heading (Shown)
- Next, the display indicates Chiller Operating Mode (Status)
- If left displayed, mode will change as the chiller cycles
- Only one operating mode is displayed at a time

REFRIGERANT REPORT

PRESSURES

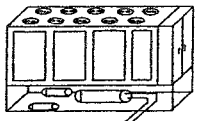

TEMPERATURES

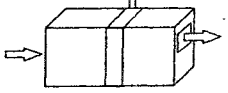

169

REFRIGERANT REPORT

*Evaporator And Condenser Refrigerant Pressure
*Saturated Evaporator Temperature/ Evaporator Refrigerant Pressure
*Saturated Condenser Temperature/ Condenser Refrigerant Pressure
*Saturated Evaporator Temperature And Discharge Temperature
*Purge Operating Mode/ Purge Status
*Purge Alarm Message
*Purge Suction Temperature/Purge Liquid Temperature
*Purge Pumpout Rate/ Purge Maximum Pumpout Rate
*Purge Total Pumpout Time/ Purge Total Pumpout Time
*Purge Adaptive Cycle Time w/Chiller On/ Time To Purge Remaining
*Purge Adaptive Cycle Time w/Chiller Off/ Time To Purge Remaining
*Purge Service Log
*Pumpout Average Last 30 Days
*Refrigerant Monitor (ASHRAE 15 - Building Code)

170

REFRIGERANT REPORT

(Continued)

Purge System

171

PURIFIER PURGE - PRGC

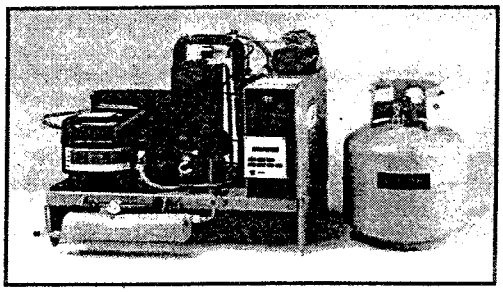

172

COMPONENTS IDENITFIED

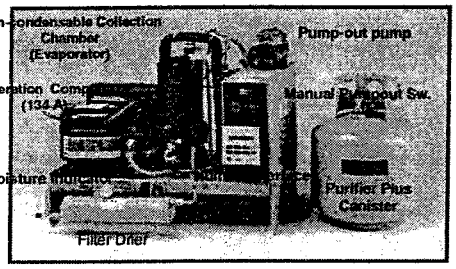

173

PURGE SUPPLY & RETURN LINES

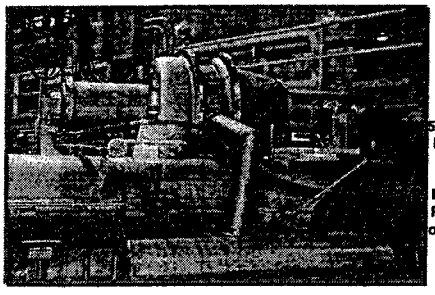

5/8" Vapor Line Into Purge

Liquid Line Return om Purge

174

LIQUID LEVEL FLOAT

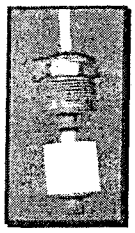

- Purpose to Sense Rise in Liquid & Shut Unit Down
- Avoid Purging Liquid Refrigerant



175

SATURATED SUCTION SENSOR

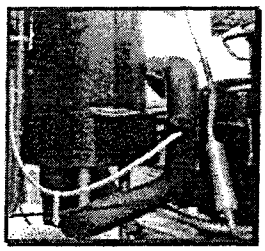

- Located in Suction Line Between Outlet of Purge Tank & Inlet of Compressor
- 10,000 Ohms @ 77 ° Negative Temperature Coefficient
- Initiates & Terminates Purge Pump Out Compressor

176

SATURATED CONDENSER SENSOR

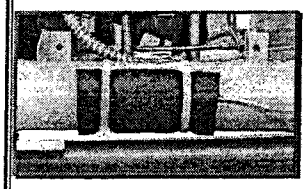

- Used to Inhibit Purge Operation When Condensing Temperatures are Low
  - Evaporator Cannot Condense Adequate Amounts of R-123
  - Refrigerant Temperature Remains Cold, Causing Pumpout Compressor to Continue to Operate
- Installed on Bottom of Filter/Drier for Retrofit
- Uses Chiller Saturated Condensing Temp for UCP-2

177

RESTRICTOR ORIFICE

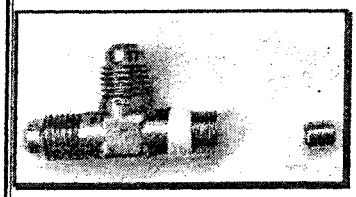

* Minimizes the Amount of Refrigerant Exhausted With Air During Pump-out

178

PURGE CIRCUIT SCHEMATIC

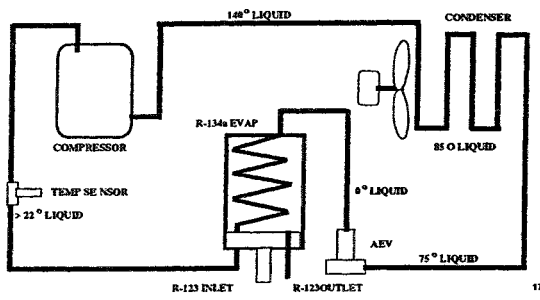

179

MASS OF VARIOUS GASSES

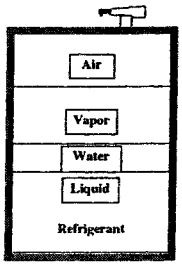

* Air = .075 # / Cu. Ft
* R-123 Vapor @ 90o = ~.33 # / Cu. Ft
* Water = 62.4 # / Cubic Foot
* R-123 Liquid @ 90o = ~ 90 # / Cu. Ft

180

HOW DOES AN AEV WORK?

- Maintains a Constant Pressure in the Evaporator While The Condensing Unit is Operating
- Controlled by Suction Pressure
- When Suction Pressure Rises, Valve Tends to Close
- When Suction Pressure Falls, Valve Tends to Open
- Very Slow to Pull Temperature Down
- Sizing Should be to the Load

181

LACK OF NON CONDENSABLES

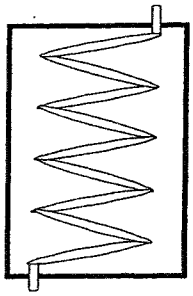

- R-134a Liquid Refrigerant Enters Evaporator – 0° F
  - Large Area for Transfer of Sensible Heat (Superheat)
  - Warm R-123 Vapor Transfers Heat to 134a Vapor
- R-134a Suction Vapor Exits Evaporator – Same Temperature as R-123 Condenser Gas

182

PRESENCE OF NON CONDENSABLES

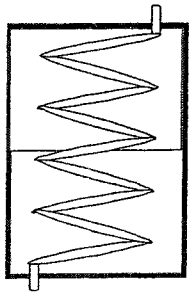

- R-134a Liquid Refrigerant Enters Evaporator – 0° F
  - Less Area for Transfer of Sensible Heat (Superheat)
  - Warm R-123 Vapor Transfers Heat to 134a Vapor
- R-134a Suction Vapor Exits Evaporator at a Temperature Substantially Less Than R-123 Condenser Gas

183

TANK FULL OF NON CONDENSABLES

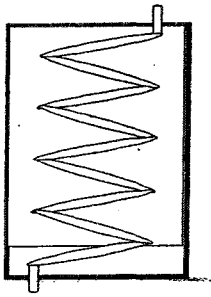

- R-134a Liquid Refrigerant Enters Evaporator ~ 0 ° F
  - No Area for Transfer of Sensible Heat (Superheat)
  - Warm R-123 Vapor Cannot Transfer Heat into 134a Vapor
- R-134a Suction Vapor Exits Evaporator - Same Temperature as Entering Temp
- Suction Line Temperature Sensor Initiates Pumpout @ 18 ° F

184

NON CONDENSABLES PUMPED OUT

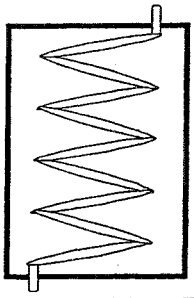

- R-123 Refrigerant Vapor Enters Evaporator at Condensing Temperature
  - Large Area for Transfer of Sensible Heat (Superheat)
  - Warm R-123 Vapor Transfers Heat to 134a Vapor
- R-134a Suction Vapor Exits Evaporator - Same Temperature as R-123 Condenser Gas
  - Suction Line Temperature Sensor Terminates Pumpout @ 22 ° F

185

REFRIGERANT RETURN

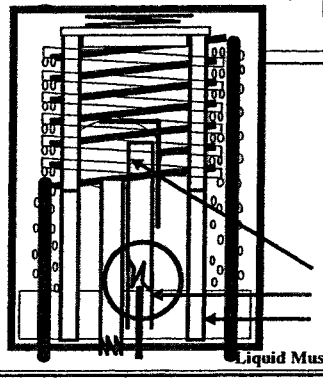

Liquid Must Rise Over Top of Stand Pipe[186]

Refrigerant Report

(Continued)

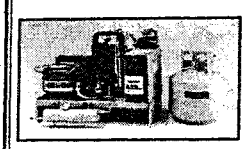

* **Purge Status**
  (Idle, Running, Pumpout, Service Pumpout, Running Inhibited, Pumpout Max. Rate Disabled)

1. **Idle = Purge condensing unit off**
2. **Running = Purge condensing unit on**
3. **Pumpout = Purge compressor on and pumpout compressor on by purge compressor suction temp. switch.**
4. **Service Pumpout = Manual pumpout initiated by operator at control panel switch.**
5. **Running inhibited = Pumpout inhibited by low liquid temperature.**
6. **Pumpout Max. Rate Disabled = Max. Pumpout Rate Alarm Disabled**

187

Refrigerant Report

(Continued)

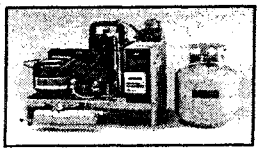

* **Purge Alarm Message**
  (Go to Diagnostics for Message)
* **Purge Suction Temp.** **(Compressor Circuit, Starts and Stops the Sump Pumpout Compressor @ 16 F & 22 F)**
* **Purge Liquid Temp.** **(Chiller Circuit Freeze Protection, Purge Evaporator Chiller Refrigerant Output Saturated Temp. Measured at the Filter Drier)**
* **Purge Pumpout Rate (24 Hrs.) / Purge Maximum Pumpout Rate (Set by Operator)**

188

Refrigerant Report

(Continued)



* **Purge Total Pumpout Time**
  (Exhaust Compressor) / Purge Total Run Time (Purge Refrigeration System From Time of Installation)
* **Purge Adaptive Cycle Time - Chiller On (Purge off Cycle Time) / Time to Purge Remaining (Purge Off-time Remaining Before Purge Is Allowed to Operate)**
* **Purge Adaptive Cycle Time - Chiller Off (Extended Purge off Cycle Time) / Time To Purge Remaining (Purge Off-time Remaining Before Purge Is Allowed to Operate)**

189

ADAPTIVE - CHILLER RUNNING

- Primary Function of Adaptive Mode Is to Save Energy
- Purge UCM Stores:
  - Total Pump Out Time
  - Total Chiller Run Time
- Computes Average Pump Out Time Per 24 Hours
- Computes Pump Out Time for Last Day
  - If Last Day's Pumpout Time Is Greater Than 5 Times the Average, the Last Day's Pumpout Time Will Determine "Off" Cycle; Otherwise - Use Average
- Purge Starts When the Chiller Starts
- Purge will Continue to Run Until 60 Minutes w/o Pumpout Elapses
- Purge Will Shutdown & Base Off Time on Calculated Average Pumput Time:
  - < 1 Min — 4 hour
  - 1 to 3 Min — 3 Hour
  - 3 to 5 Min — 2 Hour
  - 5 to 8 Minutes — 1 Hour
  - Greater than 8 — No Off

190

ADAPTIVE - CHILLER SHUTDOWN + 3 HRS

- Main Function is to Purge Air That is Stored In Chiller During Operation
  - Can be Trapped in Various Areas of an Operating Chiller & not Migrate to Purge Pick Up Tube Area
- A Purge Operating in First Three Hours of Shutdown Confirms Air Storage
- UCM Will Store Accumulated Pumpout Time for the Last 5 Chiller Shutdowns
- Time Period Will be Calculated Based on Average Pumpout Time
- Calculation Will Determine Amount of Run Hours Allowed Before Purge Will Run at Off + 3:
  - Less than 2 Min — 80 Hours
  - 2 to 4 Minutes — 40 Hours
  - Greater that 4 — 20 Hours
- When Purge Starts in This Mode, it Will Operate for 3 Hours or Until 30 Consecutive Minutes of Run Time w/o Pumpout have elapsed.

191

ADAPTIVE - CHILLER EXTENDED OFF

- Main Function is To Purge Air that Accumulates During Extended Off Periods
- UCM Calculates Total Pumpout Time:
  - With Chiller Operating
  - Chiller Off + 3
  - Chiller Off
- Determines Number of Days Off Before Purge Operation is Required:
  - < 1 Minute — 14 Days
  - 1 to 2 Min — 10 Days
  - 2 to 3 Min — 6 Days
  - 3 to 4 Min — 4 Days
  - 4 to 5 Min — 3 Days
  - 5 to 8 Min — 2 Days
  - 8 or Greater — 1 Day

192

REFRIGERANT REPORT
(Continued)



* Purge Service Log
* (Can Be Reset in Service Settings) / Purge Pump-out Time (Accumulated Relief Time - Present Log)
  Purge Service Log / Time Since Last Reset (Days Since Last Log Reset)
  30 Day Purge Pump-out Average (Minutes/day - Chiller off or On) / Chiller Average Run Time (Hrs/day)

REFRIGERANT REPORT
(Continued)



* 30 Day Pumpout Average, Chiller Running (Minutes)
* Last 5 Cycle Pumpout Average, Interval From Shutdown to 3 Hrs After Shutdown (Minutes)
* 30 Day Pumpout Average: Interval From 3 Hrs After Shutdown to Next Start (Minutes)

REFRIGERANT REPORT

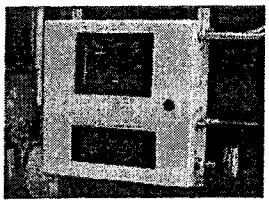

* Refrigerant Monitor (Parts per Million)
* ASHRAE 34
  - Equipment room refrigerant vapor level reading
  - Alarm device
  - Starts ventilation fans
* Evap / Cond Approach Temp

COMPRESSOR REPORT

Bearings

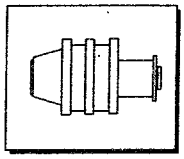

Temperature

Oil Pressure

Windings

196

COMPRESSOR REPORT

*Differential Oil Pressure/ Oil Temperature
*Compressor Speed Command
*Discharge Oil Pressure/ Tank Oil Pressure
*Inlet Guide Vane Position
*Compressor Phase Currents % RLA
*Compressor Phase Currents Amps
*Compressor Phase Voltages
*Compressor Power Factor And Watts
*Compressor Winding Temperatures/Phase
*Compressor Starts And Running Time
*Bearing Temperatures #1 And #2
*Solid State Starter Heat Sink Temperature
*Hot Gas Bypass Time

197

OPERATOR SETTINGS

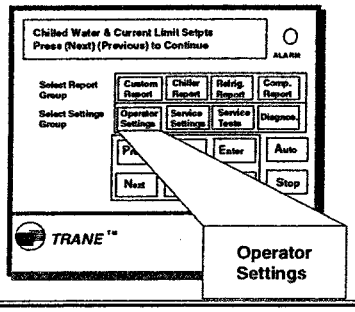

198

OPERATOR SETTINGS

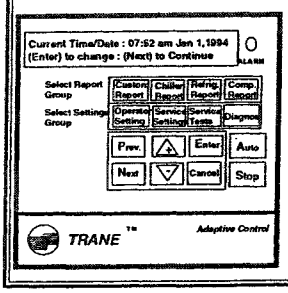

* Current Time/Date
  - + - Time Enter
  - + - Minute Enter
  - + - Month Enter
  - + - Day Enter
  - + - Year enter
* "Chiller Clock Updating" Screen Appears After Every "Enter"

199

OPERATOR SETTINGS

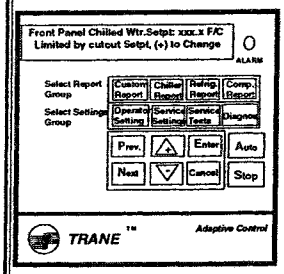

* Chilled Water Setpoint* (Default 44 F) (1.7 F. LWT & 6 F. Refrig. Temp. Minimum Differential to Setpoint)
* Current Limit Setpoint*
* Hot Water Setpoint * (CTV only)

200

OPERATOR SETTINGS

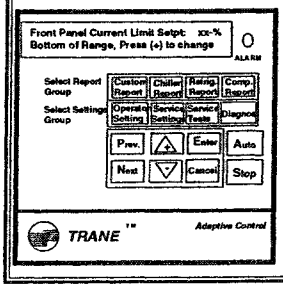

* Current Limit Setpoint
  - 40 to 100%
  - 1% Increments
  - Factory Setting= 100%
* Hot Water Setpoint * (CTV only)

201

OPERATOR SETTINGS

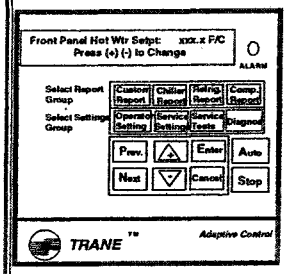

* Hot Water Setpoint (CTV only)
  - Range of Values - 100 to 140

202

OPERATOR SETTINGS

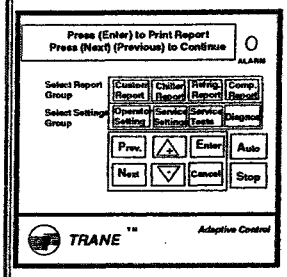

* Print Report
  - When Enter is Pushed "Print Command is Being Sent to The Printer" Appears

203

OPERATOR SETTINGS

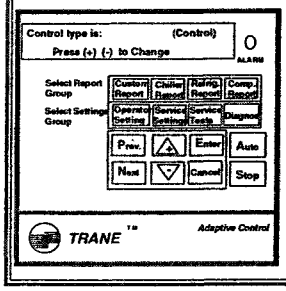

* Control Type
  - Chilled Water
  - Hot Water
  - Ext. Hot/Chilled Water

204

OPERATOR SETTINGS

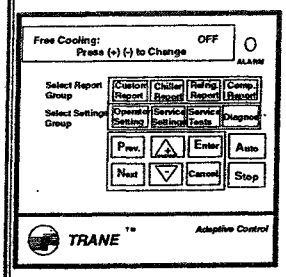

- Free Cooling
- Only Appears if Installed
- Values are Off or On
  - Suction / Discharge Bypass Valve
  - Refrigerant Flooding Valve
  - Extra Refrigerant Storage
  - Tower Water Temperature Valve

OPERATOR SETTINGS

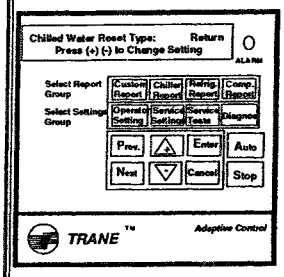

- Chilled Water Reset Type
  - Return
  - Constant Return
  - Outdoor Air
  - Disable
- If Either "Disable" or "Constant Return" are Selected, The Remaining Reset Screens are Skipped

OPERATOR SETTINGS

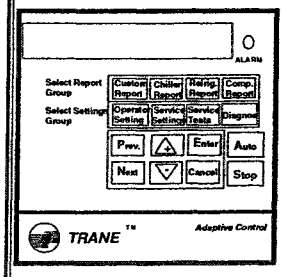

OPERATOR SETTINGS

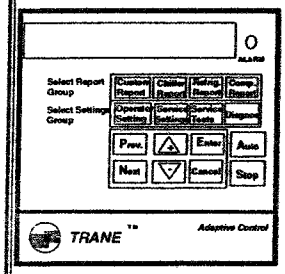

208

Operator Settings

Old Reset Control

Return Water Temperature Sensing

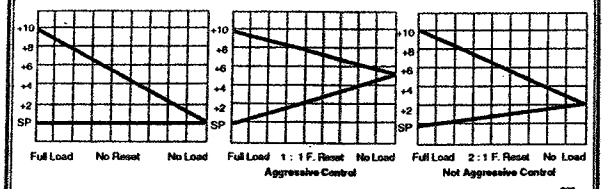

209

Operator Settings

Reset Ratio = Aggressiveness
Start Reset = Top of range from setpoint
Maximum Reset = Max.amount of reset aggressiveness (5 degrees)

	Reset Type	Range	Increment	Default
Reset Ratio	Return	10 - 120 %	1.0 %	50 %
	Outdoor	80 - (-80 %)	1.0 %	10 %
Start Reset Setpt.	Return	4-30 F	.1 F	10 F
	Outdoor	50 - 130 F	.1 F	90 F
Max. Reset Setpt	Return	0 - 20 F	.1 F	5 F
	Outdoor	0 - 20 F	.1 F	5 F

210

Operator Settings

Reset Calculations

Formula

Reset = Start Reset - Outdoor Air Temp.
X Reset Ratio + Chilled Water setpoint

90 - 70 X 80%= 16 F. Reset + 45 = 61

IF MAXIMUM RESET IS SET AT
5 F., THE FINAL TEMPERATURE
WILL BE 50 F.

211

Operator Settings

Ice Building D / E
Press (+) (-) To Change Setting

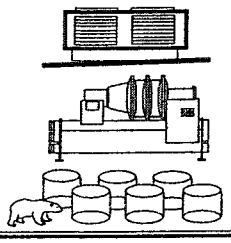

* **Ice Building Enable**
  - Enable Disable, ROM Default,
* **Front Panel Ice Termination Setpoint**
  - 20 to 32 Degrees F, Factory ROM Default 27 F
* **Ice Making To Normal Cooling Transition Timer**
  - 0 to 10 Minutes, Factory ROM Default 5 Minutes
* **Ice Termination Setpoint Source**
  *** (Out Of Sequence)
  - Front Panel, Factory ROM Default

212

Operator Settings

Chilled Water Setpoint Source
(Source)

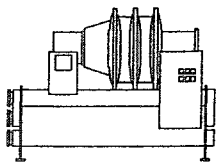

* **Chilled Water Setpoint Source**
  - Front Panel, Factory ROM Default
  - External Source
* **Current Limit Setpoint Source**
  - Front Panel, Factory ROM Default
  - External Source
* **Setpoint Source Override**
  - None - Factory ROM Default,
  - Use Front Panel Setpoints

213

Operator Settings

Purge Operating Mode : Auto
Press (+) (-) to change settings

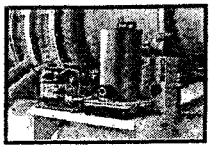

* Purge Operating Mode
  - Off - Condensing unit will not run
  - On - condensing unit runs constantly, Pumps out when needed
  - Auto - Purge runs when needed if the chiller runs constantly (Default)
  - Adaptive - Purge operates in response to 30 day data

214

Diagnostics

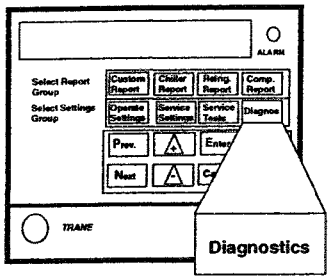

215

CenTraVac Chillers
~~*UCP2 Diagnostic Information*~~

* Over 200 Diagnostic Messages
* Dedicated Diagnostic Summary Report
  - Stores Last 20 Diagnostic Messages
  - Diagnostics Can Be Active or Historic
* Each Diagnostic Is a 2-screen Message
  - Diagnostic and Type (Informational, Auto Reset, Manual Reset)
  - Time and Date Stamp With Basic Troubleshooting Guide

216

Diagnostic Information

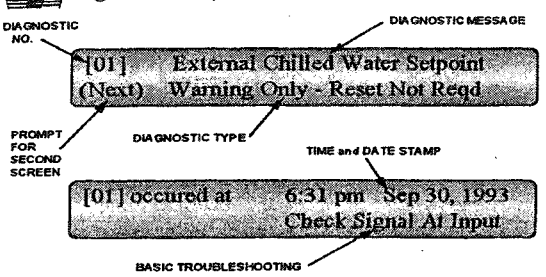

217

UCP2 Diagnostic Information

* System Level
  - Oil Temperature / Pressure, Low Temperature Cutouts, Motor Winding Temperatures, Bearing Temperatures, Restart Inhibit Timer, ...
* Starter/Power Related
  - Starter Contactor, Transition, Overload, Over/Under Voltage, Phase Reversal, Phase Loss, Phase Imbalance, Momentary Power Lioss, ...
* All Sensor Faults
  - Temperature / Pressure Sensors
* Purge Related
  - Refrigerant Temperature, Pumpout Rates, Liquid Level
* Other Faults
  - IGV & Valve Actuator Circuit, Oil Flow Detection Circuit, SSS, AFD

218

Diagnostics

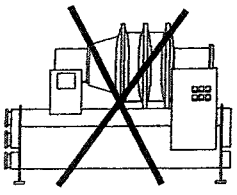

* *Three Types of Diagnostics*
  - Warning Only - Reset not required - (Applies to all IFW - Informational Warning)
  - Unit Shutdown - Automatic Reset (Applies to all MAR - Machine Auto Reset Diagnostics)
  - Unit Shutdown - Reset Required (Applies to all MMR - Machine Manual Reset Diagnostics)
  - MMR = Lockout

219

Diagnostics

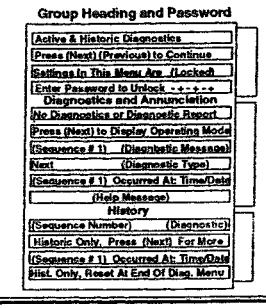

* Diagnostics are Password Protected if called out in menu settings
  - (- + - + - +)
* 20 diagnostic messages can be stored
* As a new message appears the last stored message is lost
* Diagnostic measurements are sequential in groups

220

Diagnostics

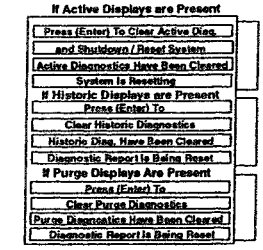

* Clearing Diagnostics
  - End of the active diagnostics menu 3 screens appear that allows the user to clear the memory
  - Active screens are removed by pressing (Enter) key 2 seconds
  - Historic screens are removed by pressing (Enter) key 4 seconds
  - Purge screens are removed by pressing (Enter) key 4 seconds
  - The screen will reset to the operating mode screen of the chiller report

221

Operating Sequence Diagram

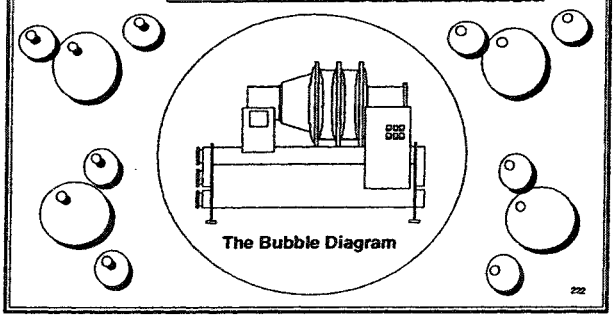

The Bubble Diagram

222

Basic Operating Sequence

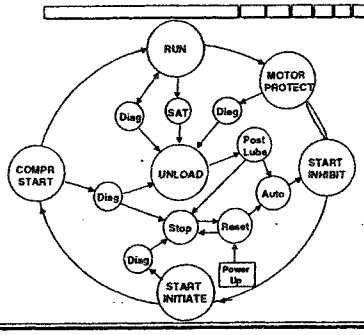

223

Unit Timing Sequence

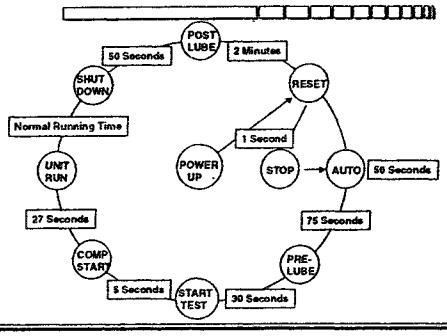

224

Start Initiate

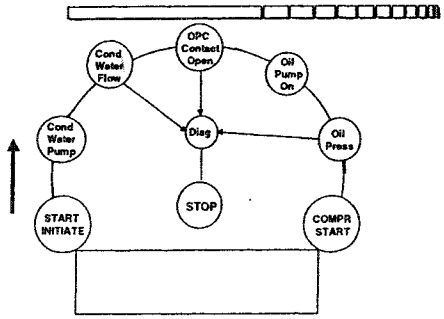

225

Compressor Start

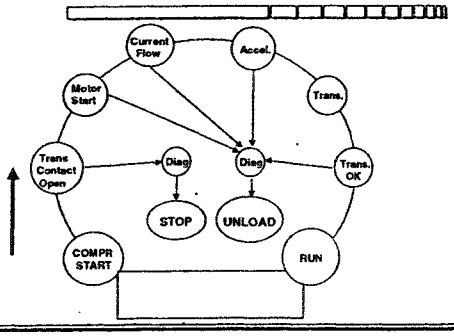

226

Run

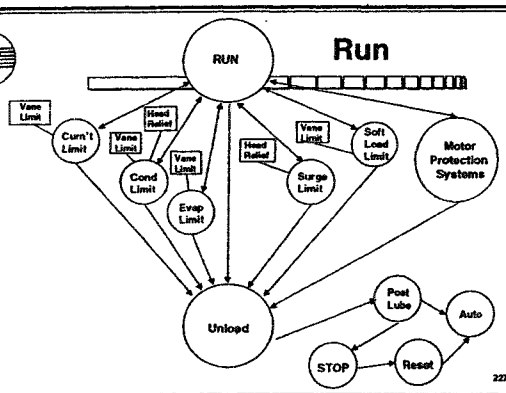

227

Module Input / Output Values

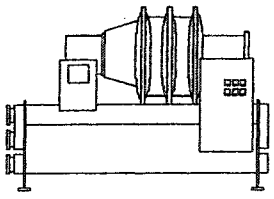

CTV

228

Test Points

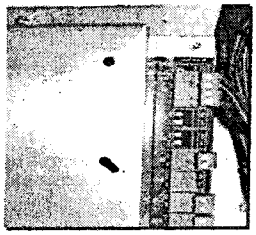

229

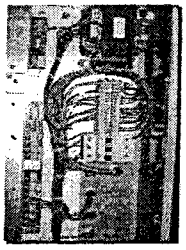

230

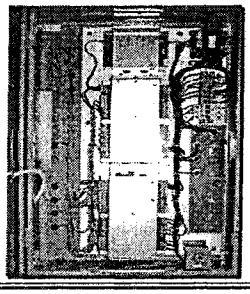

231

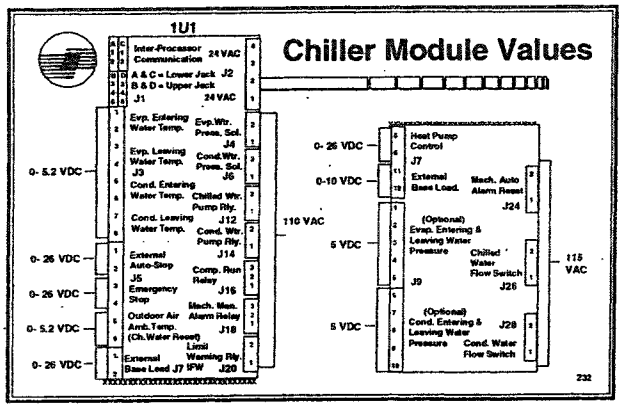
Chiller Module Values
1U1
Inter-Processor Communication
24 VAC
A & C = Lower Jack J2
B & D = Upper Jack
J1
24 VAC
Evp. Entering Water Temp.
Evp.Wtr. Press. Sol. J4
Evp. Leaving Water Temp. J3
Cond.Wtr. Press. Sol. J6
Cond. Entering Water Temp.
Chilled Wtr. Pump Rly.
Cond. Leaving Water Temp.
Cond. Wtr. Pump Rly. J12
External Auto-Stop J5
Comp. Run Relay J14
Emergency Stop J16
Outdoor Air Amb. Temp. (Ch.Water Reset)
Mech. Mon. Alarm Relay J18
External Base Load J7
Limit Warning Rly. IPW J20
0- 5.2 VDC
0- 26 VDC
0- 26 VDC
0- 5.2 VDC
0- 26 VDC
110 VAC
0- 26 VDC
0-10 VDC
5 VDC
5 VDC
Heat Pump Control J7
External Base Load.
Mech. Auto Alarm Reset J24
(Optional) Evap. Entering & Leaving Water Pressure
Chilled Water Flow Switch J9 J26
(Optional) Cond. Entering & Leaving Water Pressure
Cond. Water Flow Switch J28
115 VAC
232

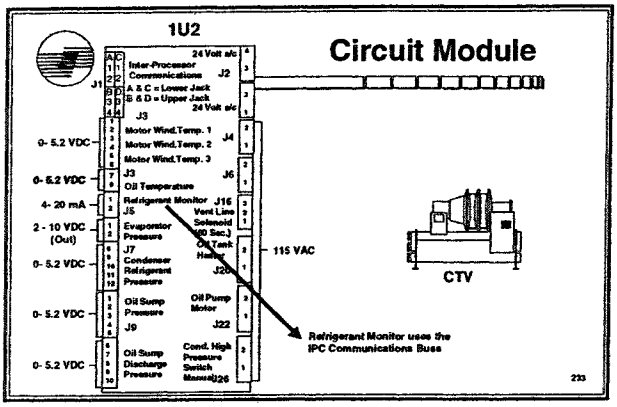
Circuit Module
1U2
24 Volt a/c
Inter-Processor Communications J2
A & C = Lower Jack
B & D = Upper Jack
24 Volt a/c
J3
Motor Wind.Temp. 1
Motor Wind.Temp. 2 J4
Motor Wind.Temp. 3
J3
Oil Temperature J6
Refrigerant Monitor J5
Vent Line Solenoid (30 Sec.) J16
Evaporator Pressure
Oil Tank Heater
Condenser Refrigerant Pressure J26
Oil Sump Pressure
Oil Pump Motor J9 J22
Oil Sump Discharge Pressure
Cond. High Pressure Switch Manual J26
0- 5.2 VDC
0- 5.2 VDC
4- 20 mA
2 - 10 VDC (Out)
0- 5.2 VDC
0- 5.2 VDC
0- 5.2 VDC
115 VAC
CTV
Refrigerant Monitor uses the IPC Communications Buss
233

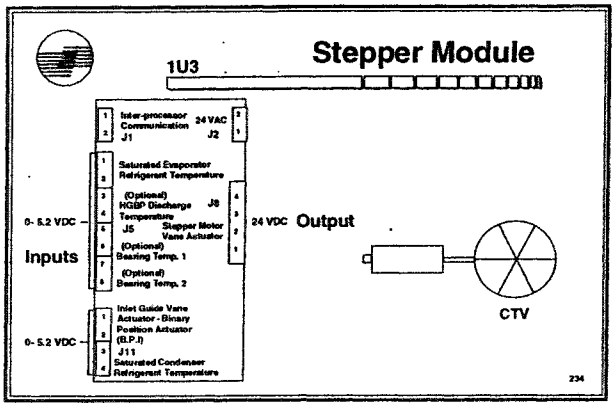
Stepper Module
1U3
Inter-processor Communication
24 VAC
J1
J2
Saturated Evaporator Refrigerant Temperature
(Optional) HGBP Discharge Temperature J8
Stepper Motor Vane Actuator J5
(Optional) Bearing Temp. 1
(Optional) Bearing Temp. 2
Inlet Guide Vane Actuator - Binary Position Actuator (BLP.I) J11
Saturated Condenser Refrigerant Temperature
0- 5.2 VDC
Inputs
0- 5.2 VDC
24 VDC
Output
CTV
234

Clear Language Display Module

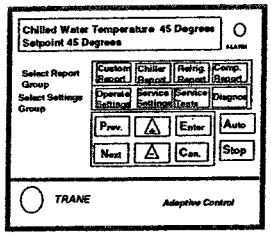

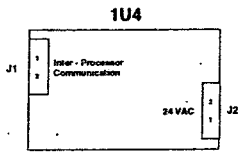

235

Options Module

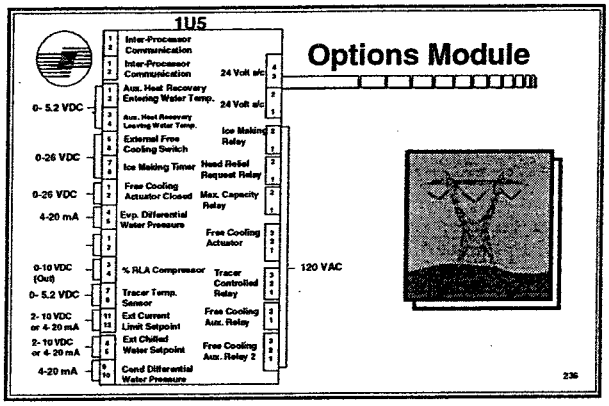

236

Communication Modules

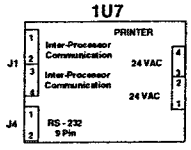

1U7 Printer Module
1U6 &1U8 Tracer Modules
(Piggyback Board)
1U9 IPC Buffer Module
(Remote CLD Only)

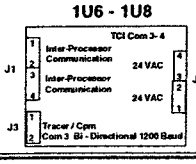

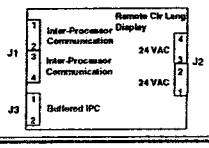

237

Input / Output Module

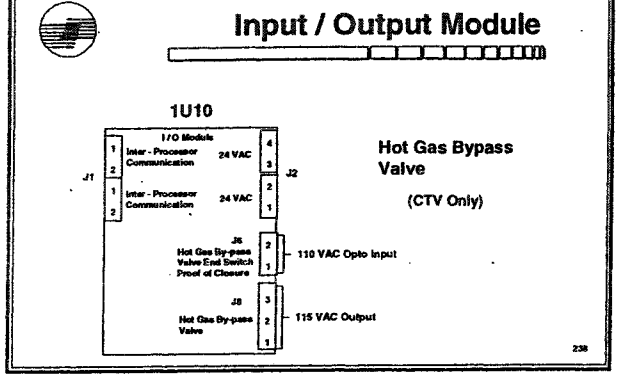

Purge Module

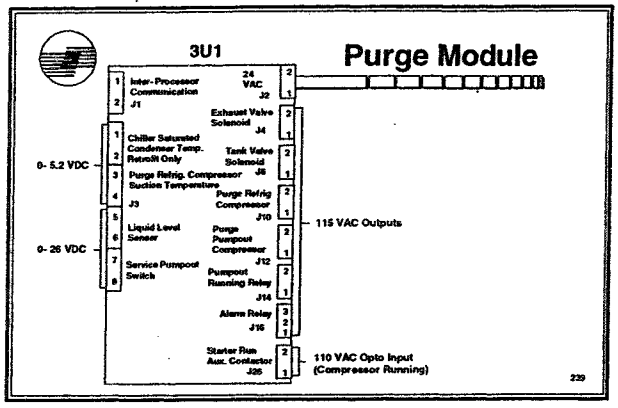

Starter Module

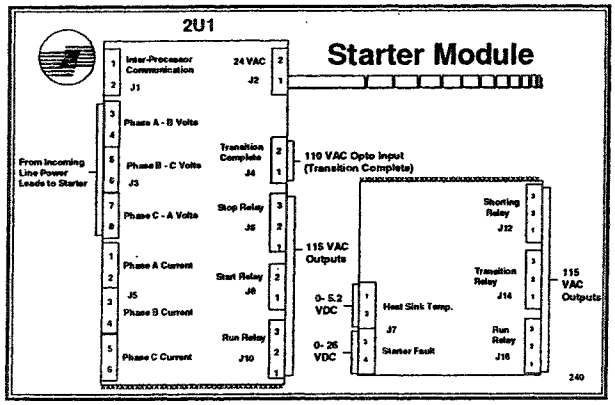

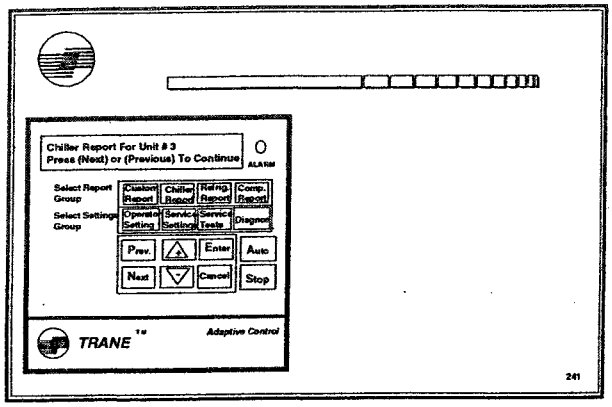
Chiller Report For Unit # 3
Press (Next) or (Previous) To Continue
ALARM
Select Report Group
Custom Report
Chiller Report
Refrig. Report
Comp. Report
Select Settings Group
Operator Setting
Service Setting
Service Tests
Diagnos
Prev.
Enter
Auto
Next
Cancel
Stop
TRANE
Adaptive Control
241

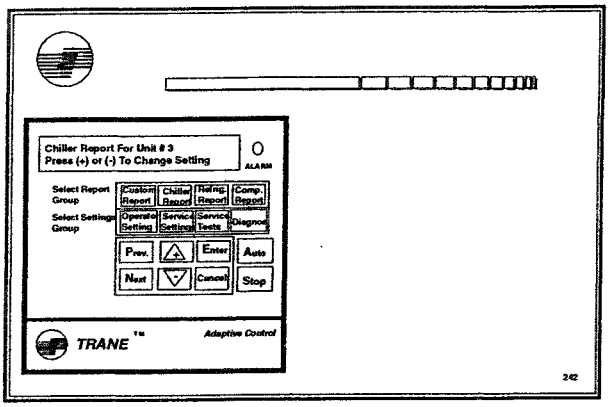
Chiller Report For Unit # 3
Press (+) or (-) To Change Setting
ALARM
Select Report Group
Custom Report
Chiller Report
Refrig. Report
Comp. Report
Select Settings Group
Operator Setting
Service Setting
Service Tests
Diagnos
Prev.
Enter
Auto
Next
Cancel
Stop
TRANE
Adaptive Control
242

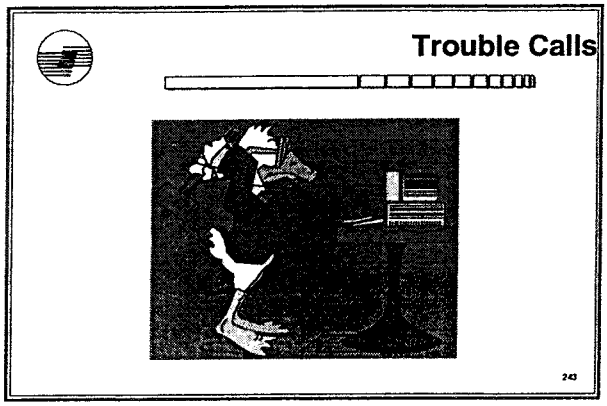
Trouble Calls
243

Grounding



- All Grounding Shall Be Terminated At The Electrical Panel
- Printed Circuit Boards Use Even Numbers For Ground Points And Odd Numbers For Power Points- IPC Only
- All Inter-processor Communication Wires Must Be Shielded And attached To Ground

244

Inter- Processor Communications

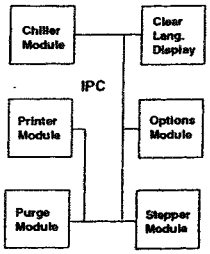

- Reverse Polarity (Even = +, Odd = -)
- Improper Grounding
- Intermittent Connections
- Excess Run Length (1,500 Ft. Maximum)
- Loose Connections
- Corroded Terminals
- Improper Wire Size (Beldon 8760)
- Bad Printed Circuit Boards

245

UCP2 BAS Interface Options

- Generic Building Automation System
  - hardwired interface
  - analog inputs and outputs
  - binary inputs and outputs
- Tracer 100 Series and Summit
- Automation interoperability - BACnet

246

UCP2 BAS Interface Options

- Automation Interoperability
  - Open Proprietary Protocol — Custom Proprietary Translators
  - Open Standard Protocol — BACnet "Building Automation Control Network"
- ASHRAE SPC-135P
  - ARCNET or ETHERNET LAN, or RS-232 based

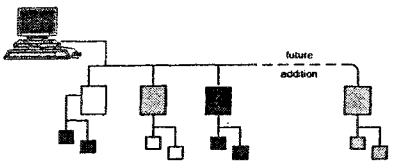

247

UCP2 BAS Interface Options

- Binary Outputs
  - Evaporator Pump Relay
  - Condenser Pump Relay
  - Compressor Running Relay
  - Alarm Relay
  - Limit Warning Relay
  - Purge Alarm Relay
  - Maximum Capacity Relay
  - Ice Making Relay
  - Head Relief Request Relay
  - Free Cooling Auxiliary Relay
  - Purge Pumpout Running Relay
- Binary Inputs
  - Chiller Auto STOP
  - Chiller Emergency STOP
  - Free Cooling Enable/Disable
  - Ice Building Enable/Disable

248

UCP2 BAS Interface Options

- Analog Outputs
  - Condenser Pressure Output
  - Percent RLA Output
  - Industry Standard Signal (4-20 mA or 2-10 vdc)
- Analog Inputs
  - Chilled Water Setpoint - Generic BAS
  - Current Limit Setpoint (Percent RLA) - Generic BAS
  - Industry Standard Signal (4-20 mA or 2-10 vdc)

249

Momentary Power Loss Protection

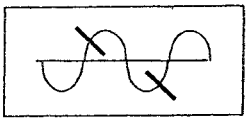

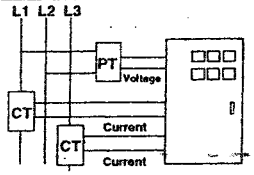

- 20 Times Rated Torque
- Rotor Bar And Stator Failures
- Impeller And Shaft Key Way Damage
- Starter Contactor Damage
- Current And Voltage Always Wants To Be In Phase
- Will Detect Momentary Power Loss In 2- 3 Electrical Cycles And Shutdown In 6 Cycles

250

Starting Overcurrent Protection

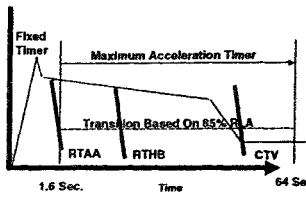

	Timer 1	Timer 2
Y - Delta	= 27 Sec.	*228
Auto - Tran.	= 16 Sec.	*239
Prl. - React.	= 16 Sec.	*239
Across Line	= 6 Sec.	*249
Sol. St. Start	= 20 Sec.	*235
Vari. Speed Dr.	= 12 Sec.	*243

Choice: Shutdown or Transition

251

Running Overcurrent Protection

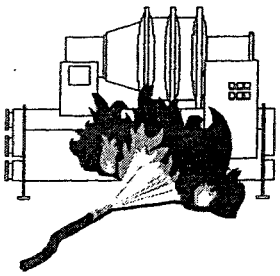

- Overload Must Hold At 102%RLA
- Overload Must Trip At 112 % RLA After 20 Seconds + - 3 Sec.
- Overload Must Trip At 140% RLA After 1.5 Seconds
- Based on Highest Phase Current

252

Phase Unbalance

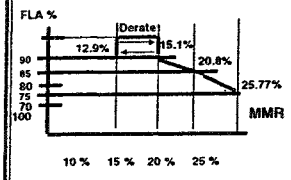

- Formula is: 100 X Sum of Dev. of Each Phase Current To The Average / By 2X Avg.
- Measured - 200, 225, 250 A
- Average Is 225 Amps
- Difference is 50 X 100 = 5000 / 500 = 10 % Unbalance
- At 25% / 30%Unbalance The UCP Will Trip But The Unit Will Unload To Try To Maintain Operation

253

Sensor Values

RTH- CTV- ABS

254

Oil Pressure Transducers

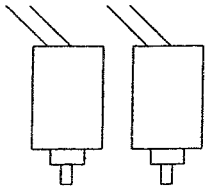

Oil Sump Pressure (-)

Oil Pump Pressure (+)

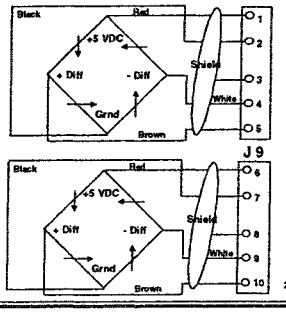

255

Oil Pressure Transducers

No More Gauges

Normal Delta " P " Oil Pressure = 12 To 18 Psi
Mounted Downstream Of The Oil Regulator
Minimum Running Oil Pressure = 9 Psid
3 Minute Compressor Time Delay At Startup (Prelube)
5 Minute Time delay after Compressor Off Cycle
Transducers are recalibrated to 0 Psid if a differential of more than 3 PSIG exists

(Warning) A Deep Vacuum Will Effect The Transducer And Recalibration Is Required

256

Oil Measurement Procedure

Measure Oil Sump Pressure = 15 inches Hg
Convert To Pressure = Divide The Oil Sump Pressure By 2.036 (15 Inches Hg : 2.036 = 7.367 Psi)
Measure Oil Pump Pressure = 12 Psi
Add 12 Psi And 7.367 Psi = 19.367 Psid (Differential)

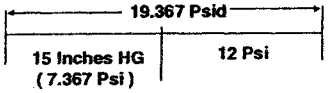

257

Current Transformers

Induction Transformers

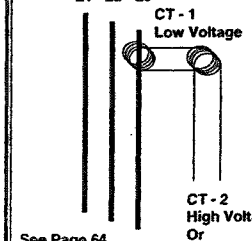

Table #1 (Below 600 Volts)
CT - Factor = (Motor RLA : CT Rating X 100)

300 Amps : 400 Amps = .75
.75 X 100 = 75 CT Factor
75 = Current Overload Setting #1 (10)
Current Overload Setting #2 (245)

Table #2 (Above 600 Volts)
CT - Factor = (Motor RLA : CT Rating X 139)
(#1 = 04, #2 = 251)

Warning, Watch Out For CT - 2 Primary Turn Amounts

See Page 64
CVHE - M - 7

258

Current Transformers

Binary Numbering System

Number 10 = (2) 000 000 010
(8) 000 001 000
(10) 000 001 010

Number 37 = (32) 000 100 000
(4) 000 000 100
(1) 000 000 001
(37) 000 100 101

Powers of 2 (Binary System)

2 to the 0 power = 1	000 000 001
2 to the 1 power = 2	000 000 010
2 to the 2 power = 4	000 000 100
2 to the 3 power = 8	000 001 000
2 to the 4 power = 16	000 010 000
2 to the 5 power = 32	000 100 000
2 to the 6 power = 64	001 000 000
2 to the 7 power = 128	010 000 000
2 to the 8 power = 264	100 000 000

259

Restart Inhibit Timing

If The Motor Is Cool (Below 165 Deg.F.) RI Timer is Automatically Set At 30 Seconds Regardless of The RI Timer
If The Motor Is Warm (Above 165 Deg.F.) RI Timer Is Automatically Set At 15 Min Plus Any RI Time Value

The Maximum RI Timer Value Is 60 Minutes, But Is Adjustable From 25 To 60 Minutes Via The BT Timer
The BT Timer Is Based on System Tons And Hz Values
The BT Timer Is Defaulted To 25 Min

The Objective Is To Keep The Motor Cool And Off Time To The Minimum

See Page 78 CVHE - M - 7

260

Wiring Diagrams



261

Operator Settings

Outside Air Reset

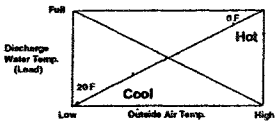

262

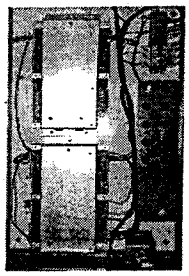

263

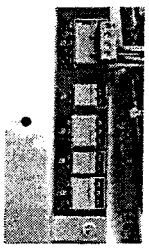

264

MACHINE CONFIG GROUP

(Continued)

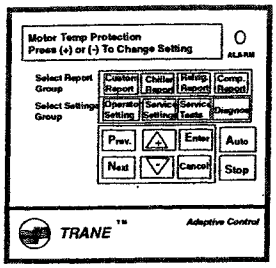

- Motor Temperature Protection
- Screen Only Appears for FastPak Units
- Possible Values:
  - 3 Winding Sensors
  - MTC Switch

MACHINE CONFIG GROUP

(Continued)

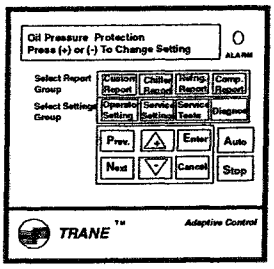

- Oil Pressure Protection CVHE/F/G/B, FastPak Wtr Cooled
  - Choices: Transducer - Diff Switch - Xducer & Switch

MACHINE CONFIG GROUP

(Continued)

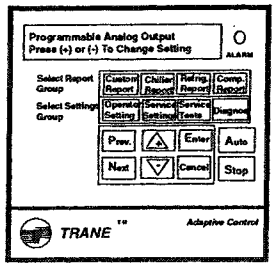

- Programmable Analog Output - For FastPak Units ONLY
  - Possible Values:
  - % RLA
  - Cond Press
  - Refrig Diff Press

MACHINE CONFIG GROUP

(Continued)

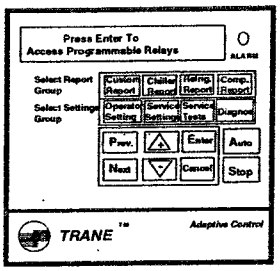

* Programmable Relays for FastPak Units ONLY

268

MACHINE CONFIG GROUP

(Continued)

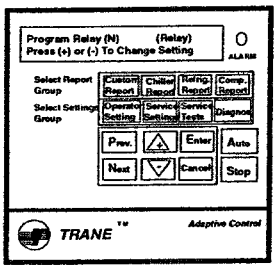

* Programmable Relays
  - Possible Values of (N) are Relay # 1, Relay # 2 or Relay # 3
  - Possible Values for (Relay) Are = Comp Running, MMR Alarm, MAR Alarm, MMR + MAR Alarm, Limit Warning, Ice Making, Head Relief Request, Tracer Controlled or Max Capacity

269

MACHINE CONFIG GROUP

(Continued)

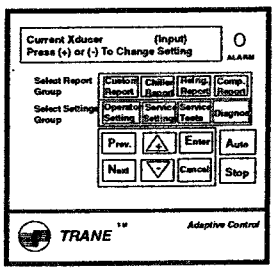

* Single Phase Current Transducer for FastPak ONLY
* Screen will Appear When Starter Type is "Stand Alone- No Starter Module"
  - Values are:
  - Cutler Hammer
  - Other

270

MACHINE CONFIG GROUP

(Continued)

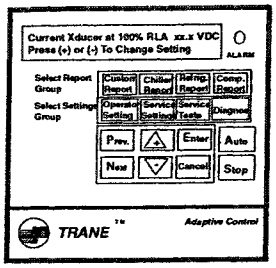

* Single Phase Current Transducer Voltage Setpoint - FastPak ONLY
  - Range of Value"
  - -5 to –10 VDC in 0.1 vdc increments

271

MACHINE CONFIG GROUP

(Continued)

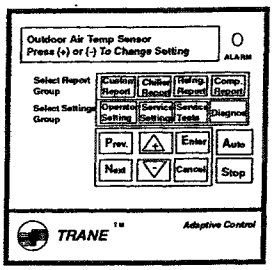

* Outdoor Air Sensor for FastPak ONLY
  - Value is Installed or Not Installed

272

SERVICE SETTINGS

(Field Startup Group)

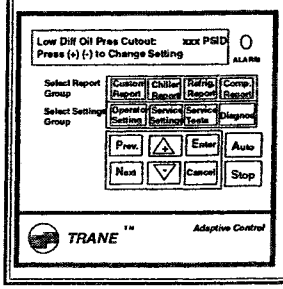

* Low Oil DP
  - Range 9 to 35 PSID
* For Fastpak, This Screen Is Displayed Only If "Oil Pressure Protection" Is Selected As Diff Xducer

273

SERVICE SETTINGS

(Field Startup Group)

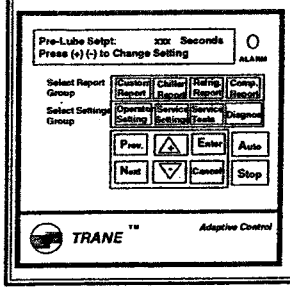

* Pre Lubrication Timer Setpoint
* For FastPak Only
  - Range 20 to 60 seconds in 10 second increments
* Post Lubrication Setpoint
  - Range 30 420 Seconds Adjustable in 10 Second Increments

274

TRANE

Installation CVRB-IN-2A

Library	Service Literature
Product Section	Commercial Aftermarket Products
Product	CenTraVac
Model	CVRB
Literature Type	Installation
Sequence	2A
Date	May 1996
File No.	SV-CAP-CTV-CVRB-IN-2A-596
Supersedes	CVRB-IN-2-595

UCP2 Control Panel Conversion Package

Model CVRB

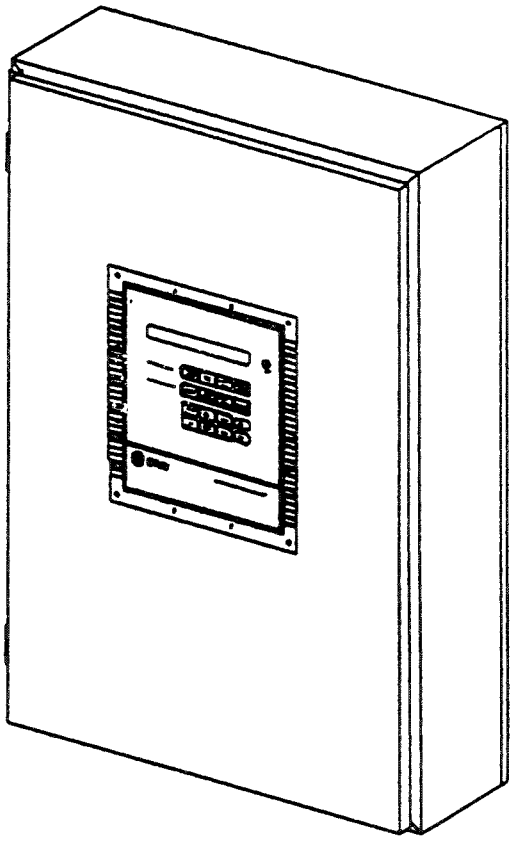

Since the Trane Company has a policy of continuous product improvement, it reserves the right to change specifications and design without notice. The installation and servicing of the equipment referred to in this booklet should be done by qualified, experienced technicians.

© American Standard Company 1996

X39640462-01

Table of Contents

Description	Page
Model Number	3
General Information	4
Contents of Kit/Options	6
Existing Control Panel Removal	12
UCP2 Installation	14
Starter Panel Conversion	39
Post-Conversion Check-out	58

Figures and Tables:

Figure 1 - Clear Language Display	10
Figure 2 - UCP2 Control Panel - Module Locations	11
Figure 3 - Sensor Location	14
Figure 4 - UCP2 Field Wiring Layout Diagram	15
Figure 4a - Serial Printer Connections	16
Figure 5 - Thermistor Bulbwell	17
Figure 6 - Pressure Transducer	20
Figure 7 - Water Pressure Transducer Tubing	23
Figure 8 - Water Pressure Transducer Assembly (<150 psig)	23
Figure 9 - Water Pressure Transducer Assembly (>150 psig)	24
Figure 10 - BPI Switch Typical Installation	25
Figure 11 - UCP2 Schematic Wiring for Clear Language Display, Stepper and Circuit Modules	28,29
Figure 12 - UCP2 Schematic Wiring Diagram for Chiller, Tracer Comm, Printer and IPCB	30,31
Figure 13 - UCP2 Schematic Wiring for IO and Option Modules	32,33
Figure 14a - Electrical Interface for Existing Oil Pump Motor	34
Figure 14b - Existing Oil Pump Contactor without 115V Coil	34
Figure 15 - Interfacing Existing Motor Temperature Thermostat w/UCP2 Control Panel	35
Figure 16 - Mounting Stepper Vane Actuator Motor	36
Figure 17a - PRGC - Purifier Purge	38
Figure 17b - PRGA & PRGB Purifier Purge	38
Figure 18 - Example of One and Two Turns	41
Figure 19 - Potential Transformer Installation	43
Figure 20 - Typical Wye-Delta Starter	44,45
Figure 21 - Typical Auto-Transformer Starter, Across-the-Line Starter, Primary Reactor Starter	46,47
Figure 22 - Remote Adaptive Frequency Drive	48,49
Figure 23 - Adaptive Frequency Drive with Manual Bypass - AFD Starter Module	50,51
Figure 24 - Adaptive Frequency Drive with Manual Bypass - Wye-Delta Starter Module	52,53
Figure 25 - Adaptive Frequency Drive with Solid State Bypass (Diagram 1 of 2)	54,55
Figure 26 - Adaptive Frequency Drive with Solid State Bypass (Diagram 2 of 2)	56,57
Table 1 - Standard Sensors with UCP2 Retrofit Kit	6
Table 2 - Optional Modules Location	11
Table 3 - UCP2 Equipment Designation	11
Table 4 - Fluid Coefficient "D" For 40° F	21
Table 5 - UCP2 Retrofit Field Wiring	26,27
Table 6 - Typical Wye-Delta Starter Designations	39
Table 7 - Current Transformer Selection (4CT1-4CT3)	41
Table 8 - Fusing for 5F1, 5F2, 5F3	43
Table 9 - Current Overload Setting Selection	59

Notice

The Trane Company urges that all HVAC servicers working on Trane equipment, or any manufacturer's products, make every effort to eliminate, if possible, or vigorously reduce the emission of CFC, HCFC and HFC refrigerants to the atmosphere resulting from installation, operation, routine maintenance, or major service on this equipment. Always act in a responsible manner to conserve refrigerants for continued use even when acceptable alternatives are available. Conservation and emission-reduction can be accomplished by following recommended Trane service and safety procedures published in Trane General Service Bulletin CTB-SB-81. The information and procedures provided in CTV-SB-81 supersedes those published in this manual. Copies of this bulletin may be obtained by contacting your local Trane commercial representative.

Model Number Description

For service purposes, Trane Model CVRB Control Panel Conversion packages are assigned a multiple-character alphanumeric model number that precisely identifies each unit. An explanation of the identification code that appears on the unit nameplate is shown below.

Use of the service model number will enable the owner/operator, installing contractors and service technicians to define the operation, components and options for any specific unit.

Refer to the model number printed on the panel nameplate (mounted on the left-hand side of the UCP control panel enclosure) when ordering replacement parts or requesting service.

Sample Model Number

Model No.	C	V	R	B	1	A	0	A	0	C	0	0	0	0	0	0	0	A	0	0	0	0	0
Digit No.	1	2	3	4	5	6	7	8	9	10	11	12	13	14	15	16	17	18	19	20	21	22	23

Digits 1,2 - CenTraVac

Digit 3 - Retrofit

Digit 4 - "B" Development Sequence

Digit 5 - Starter Module Type
- 1 = With Starter Retrofit Panel
- 2 = With Adaptive Frequency Drive
- 3 = With Adaptive Frequency Drive and Starter Bypass

Digit 6 - Option Module
- 0 = No Option Module
- A = Option Module

Digit 7 - Tracer Communication Module
- 0 = No Module
- 1 = Tracer Communication Module Comm 3
- 2 = Tracer Communication Module Comm 4

Digit 8 - CT's

2 1/2" Wire Max
- A = 150/180/200:5
- B = 250/300/350:5
- C = 400/500/600:5
- D = 700/800/1000:5
- E = 1200/1500:5

4" Wire Max
- F = 1000/1200/1500:5
- G = 1800/2100/2500:5

Digit 9 - 3 Phase Voltage Kit
- 0 = None
- 1 = <600 Volt
- 2 =120:30 VAC Auxiliary PT
- 3 = 2300/2400 Volt
- 4 = 4200 Volt
- 5 = 3300 Volt/50 Hz
- 6 = 6600 Volt/50 Hz

Digits 10, 11 - Design Sequence

Digit 12 - Process Computer Interface Module
- 0 = No Module
- 1 = Process Computer Module

Digit 13 - Printer Interface Module
- 0 = No Module
- A = Printer Module

Digit 14 - Remote Human Int. Module & Buffer
- 0 = No Module
- 1 = Remote Human Interface Module

Digit 15 - HGBP
- 0 = No HGBP
- 1 = HGBP
- 2 = 3" Valve with HGBP
- 3 = 4" Valve with HGBP

Digit 16 - Remote Clear Lang. Display Panel
- 0 = No Remote Panel
- 1 = Remote Panel

Digit 17 - Water Pressure Transducer
- 0 = None
- 1 = <150 PSIG
- 2 = >150 PSIG

Digit 18 - IGV Actuator Type
- A = Stepper
- B = Pulse

Digit 19 - Not Used, Reserved for Future Use

Digit 20 - Compressor Discharge Temp. Sensor

0 = No A = Yes

Digit 21 - Heat Recovery/Aux. Heat Exchanger Temp. Sensor Kit

0 = No B = Yes

Digit 22 - Not Used, Reserved for Future Use

Digit 23 - Outside Air Temp. Sensor

0 = No D = Yes

General Information

Literature Change History

CVRB-IN-2 (May 1995)

Original issue of manual. Describes the conversion procedures required to retrofit an older, electrically or pneumatically controlled CenTraVac® with a microcomputer-based UCP2 chiller control panel for "B" design. Includes information about the Trane Adaptive Frequency Drives for UCP2.

CVRB-IN-2A (May 1996)

Manual revised to include changes incorporated in Design Sequence "C":

- Addition of Pulse IGV Actuator
- Variable setpoint for oil differential pressure cut-out
- R113 refrigerant map
- Differential Pressure Switch option for oil flow proving

Warnings and Cautions

Notice that warnings and cautions appear at appropriate intervals throughout this manual. Warnings are provided to alert installing contractors and other personnel to potential hazards that could result in personal injury or death, while cautions are designed to alert personnel to conditions that could result in equipment damage.

Your personal safety and the proper operation of this machine depend upon precautions. The Trane Company assumes no liability for installation or service procedures performed by unqualified personnel.

About This Manual

The instructions outlined in this booklet describe the procedures required to retrofit an older model chiller (e.g. CVHE, CVHB, CVHA or PCV) with a UCP2 based control system. This manual is intended for use by experienced Trane service personnel.

Note that the installation instructions in this manual are divided into three general topic areas:

1. Existing Control Panel Removal, including removal of the existing inlet vane actuator (if required).
2. UCP2 installation including the required control panel and optional actuator assembly (if required) on both CVHE and non-CVHE centrifugal chillers.
3. Starter Panel Conversion, including general directions for modifying Wye-Delta, Auto-Transformer, Primary Reactor and Across-the-Line starters for use with UCP2.

Note: Wiring diagrams are often referenced throughout this manual. Appropriate schematic and connection diagrams ship with each UCP2 conversion package and are also included in this manual.

The UCP2 installation and check-out must be performed by qualified personnel. The check-out procedure, located at the end of this manual, for the converted starter panel and newly installed UCP2 control panel is highly recommended.

Successful completion of this check-out procedure assures that the control panel is properly installed, that all required starter and unit modifications are complete and that the chiller is operating properly.

⚠ Caution:
To prevent machine damage, contact a Trane service organization to perform the check-out procedure described at the end of this manual!

Application Guidelines

While the UCP2 control panel conversion package is specifically designed for CVHE applications, it can be applied to other, older CFC-11 and HCFC-123 water-cooled CenTraVacs® (PCV, CVHA's) whether electrically or pneumatically controlled.

The instructions also apply when converting control systems on competitor-built centrifugal chillers. Verify that Trane control strategies can be used on the application.

Please note the following:

- When the UCP2 conversion package is applied to a pneumatic chiller control system, all pneumatically-actuated valves, such as for hot gas bypass, must be replaced with electric devices.
- The UCP2 conversion package is not designed to be applied to air-cooled CenTraVacs.
- The UCP2 conversion package cannot be used in conjunction with open-transition starters.

Contents of Kit/Options

Conversion Package Contents

Each UCP2 panel conversion "kit" includes the items described below.

Note: Some UCP2/CenTraVac® retrofit applications require additional field-supplied components.

- UCP2 Chiller Control Panel with two (2) mounting brackets - Includes the Local Clear Language Display and 16 Function Keypad, see Figure 1.
- Temperature Sensors and Pressure Transducers with installation hardware including applicable bulbwells and leads. See Table 1 for list of standard sensors. Figure 3 contains a complete list of available sensors and shows their location.
- Literature including CVRB-IN-2A and the current revisions of CVHE-M-7 and CVHE-CLD-1.
- Wiring schematics located in control panel
- Replacement nameplate and nameplate laminate
- Miscellaneous electrical and mounting hardware (screws, washers, etc.)

Inlet Guide Vane Actuator Output Option - The UCP2 conversion panel can be ordered to support either a stepper motor inlet guide vane actuator or a pulse type inlet guide vane actuator. The pulse type output option uses the machine's existing induction motor inlet guide vane actuator and requires no additional hardware. In addition to the items identified above, the stepper motor output option will include the following:

- Stepper Motor Inlet Guide Vane Actuator with brackets - Some field modification to fit specific applications may be required.

Note: In non-CVHE applications, three (3) adapter brackets are required to enable installation of the new stepper vane actuator. One bracket secures the actuator to the volute, while the other two link the actuator to the actuator arm. Field fabrication of these brackets may be required in some instances.

Available Optional Kits

In addition to the standard package, several optional kits can be ordered to give the UCP2 greater capability. Use Table 5 as well as Figures 11, 12, and 13 to determine connection points.

Starter Interface Module - Required on all UCP2 applications except those with variable speed inverters by Trane. The module includes a NEMA 1 style enclosure which is suitable for attachment to the chiller starter, terminal block and three auxiliary current transformers.

Table 1 - Standard Sensors With UCP2 Retrofit Kit

Sensor	Designation	Code Number
Evaporator Entering Water Temperature	4RT1	X13790159-04
Evaporator Leaving Water Temperature	4RT2	X13790159-04
Condenser Entering Water Temperature	4RT3	X13790159-04
Condenser Leaving Water Temperature	4RT4	X13790159-04
Saturated Evaporator Refrigerant Temp.	4RT5	X13790159-02
Bearing Temperature #1	4RT7	X13790159-03
Bearing Temperature #2	4RT8	X13790159-03
Saturated Condenser Refrigerant Temp.	4RT9	X13790159-01
Oil Temperature	4RT10	X13790159-03
Condenser Refrigerant Pressure	3R3	X13790142-01
Oil Sump Pressure	4R1	X13790142-01
Oil Pump Discharge Pressure	4R2	X13790142-01

Options Module
Required to implement any or all of the following UCP2 functions:

a. Chilled Water Setpoint by External/Remote Source (e.g. Generic BAS) - Allows a remote source to set the chilled water setpoint via a 4-20 mA or 2-10 vdc signal. Range is 0 to 65° F.

b. Current Limit Setpoint (Demand Limit) by External/Remote Source (e.g. Generic BAS) - Allows a remote source to set the current limit setpoint via a 4-20 mA or 2-10 vdc signal. Range is 40 to 100%.

c. Compressor Percent (%) RLA Output - Allows a remote system (e.g. generic BAS) to receive a 2-10 vdc signal proportional to the chiller's % RLA. Range is 0 to 120% RLA.

d. Head Relief Request Output - Allows a remote system (e.g. Generic BAS) to receive a binary signal for use with compressor surge protection and condenser limit by requesting lower condenser water temperature.

e. Maximum Capacity Output - Allows a remote system (e.g. Generic BAS) to receive a binary signal indicating that the chiller is at maximum capacity.

Note: The maximum capacity relay is suppressed when the inlet guide vane actuator output is the pulse type.

f. Input for accessory sensors; which must be ordered separately.

- condenser differential water pressure transducer
- evaporator differential water pressure transducer
- heat recovery or auxiliary heat exchanger temperature sensors.

g. Ice making input/output

h. Tracer Relay, Tracer Temperature Output/Inputs

i. Free Cooling.
The module is field installed in UCP2.

Tracer Comm3 Communications Module
Required for interface between UCP2 and Tracer 100/1001/CPM panel style systems. The module is field installed in UCP2. Tracer Comm3 communications module is not compatible with SCP bi-directional communications and/or Tracer Summit systems.

Tracer Comm4 Communications Module
Required for communication between the UCP2 and Tracer Summit. The module is field installed in UCP2. Tracer Comm4 communications module will not enable communications to Tracer 100/1001/CPM panel.

Remote Clear Language Display Communications Module
Required for communications between UCP2 and the UCP2 Remote Clear Language Display Panel. The module is field installed in UCP2.

Remote Clear Language Display Panel Provides a remote clear language interface for up to four chillers equipped with UCP2 and the Remote Clear Language Display Communications Module. All functions available to the operator at the chiller are available to the user of a Remote Clear Language Display Panel. Two distinctions can be made regarding the remote display.

- The local display STOP command function has precedence over the remote display AUTO command function.
- The custom report function at the local display is separate and independent from the custom report function at the remote display.

Current Transformers
Kits have three (3) current transformers—donut type—one on each phase of line voltage, suitable for field installation in the chiller starter panel. The current transformers are inputs to the UCP2 starter module. Note that auxiliary current transformers come with required starter interface module.

Use Table 7 to determine the acceptable current transformer tap ratio(s) based upon the chiller's rated load amps (RLA). If the desired motor RLA allows the selection of multiple ratio taps, always select the transformer with the numerically smallest ratio tap. If the chiller motor RLA is less than 66% of the maximum amps for the current ratio tap selected, multiple primary turns are required. The motor rated load amps should not exceed 100% of the maximum amps of the tap selected.

If there are three current transformers in the existing starter with the desired ratio tap, they may be reused for the current transformer inputs to UCP2. If the existing current transformers are unusable, see Table 7 for proper selection.

<600 Volt Phase Voltage Kit
Includes three (3) potential transformers (transforms line voltage to 30 volts) suitable for field installation in the chiller starter. The kit is for starters with 600 volts or less and is input to the UCP2 starter module. It gives a display of phase voltage and provides under/over voltage protection (auto restart when voltage is corrected). Displayed are:

- Compressor phase voltage (a-b, b-c, c-a)
- Kilowatt usage
- Power factor

>600 Volt High Voltage Adapter Kit
Comes with three (3) 120-30 VAC potential transformers. For use on starters with existing line to 120 VAC transformers.

2300/2400 Volt Phase Voltage Kit*
Provides one (1), 3 phase transformer, line to 120 VAC.

4200 Volt Phase Voltage Kit*
Provides one (1), 3 phase transformer, line to 120 VAC.

3300 Volt Phase Voltage Kit*
Provides one (1), 3 phase transformer, line to 120 VAC.

6600 Volt/50 HZ Phase Voltage Kit*
Provides three (3), single phase transformer, line to 120 VAC

* Requires >600 Volt High Voltage Adapter Kit.

Water Pressure Transducer
The two available options are:

- <150 psig operating pressure—Includes two pressure transducers, two three-way valves and a mounting plate. Kit monitors the evaporator and condenser entering and leaving water pressures.
- >150 psig operating pressure—Includes two differential pressure transducers and mounting plate. Requires Options Module.

Compressor Discharge Temperature Sensor
Measures the compressor discharge gas temperature and provides a safety cutout on high compressor discharge temperature.

Heat Recovery/Auxiliary Heat Exchanger Sensor Kit Includes two (2) sensors for monitoring the entering and leaving water temperatures of an auxiliary heat exchanger. The kit includes wells for mounting in the heat exchanger shell. UCP2 will display the values of the entering and leaving water in the heat recovery bundle but does not provide control strategy for heat recovery. The sensor kit requires the use of an Options Module for interface to UCP2.

Outside Air Temperature Sensor
Measures outside air temperature. It is required on applications using outside air temperature based chilled water reset.

Hot Gas Bypass

Hot gas bypass with UCP2 assumes that in a retrofit situation, hot gas bypass exists on the current chiller. The necessary piping and valve are already there. UCP2 provides a new control scheme. The following are required:

- IO Module
- New 3" or 4" valve if old valve is pneumatic or not compatible with UCP2

Note: Hot gas bypass and pulse type output for the IGV actuator are mutually exclusive.

Printer Interface Module

The printer interface module provides a pre-formatted chiller log to a printer. The printer interface can be programmed via the human interface to print a chiller log on command, at the time of a diagnostic, and/or on a periodic basis. The printer interface module output is 9 pin RS-232. Maximum transmission is 50' (15.2m) to a remote printer.

Pulse Output

Required for a Pulse Type Inlet Guide Vane Actuator. IO Module is field installed in UCP2.

Note: Pulse type output for the IGV Actuator and the Hot Gas Bypass Option are mutually exclusive.

Conversion Package Inspection

Before installing the UCP2 panel, compare the data on the panel nameplate with the corresponding ordering and shipping information to verify that the proper UCP2 conversion package was shipped.

If a thorough inspection of the conversion package reveals damage or material shortages, immediately file these claims with the carrier. Specify the extent and type of damage found, and notify the appropriate Trane sales representative. Do not install a damaged component or panel without the sales representative's approval!

Control Panel Layout

See Figures 1 and 2 for illustrations of the UCP2 chiller control panel and its component layout, respectively. Tables 2 and 3 list module and equipment designations.

The installation of a UCP2 panel requires connection to devices on the chiller (see Figure 3), to external devices such as a starter (Figures 20 and 21), purge (see Figure 17), refrigerant monitor (see "Refrigerant Monitor" section) and to other miscellaneous system components (see Figure 4).

Figure 1 -
Clear Language Display

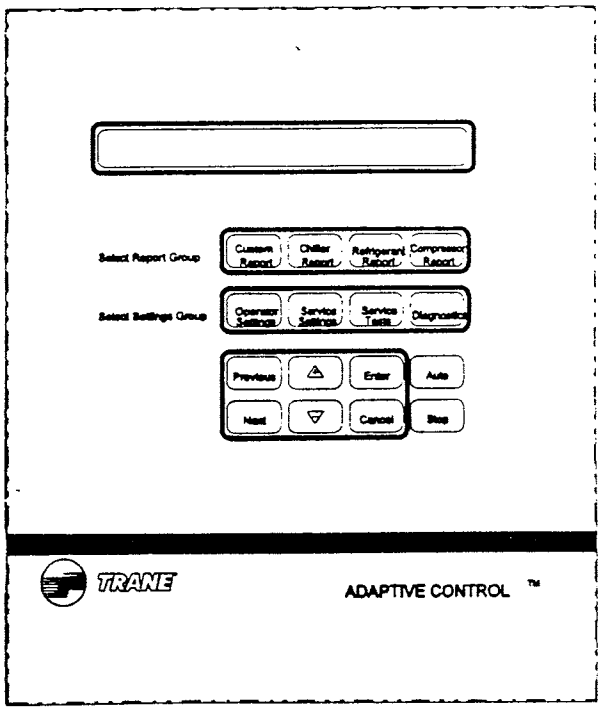

Figure 2 -
UCP2 Control Panel -
Preferred Module Locations

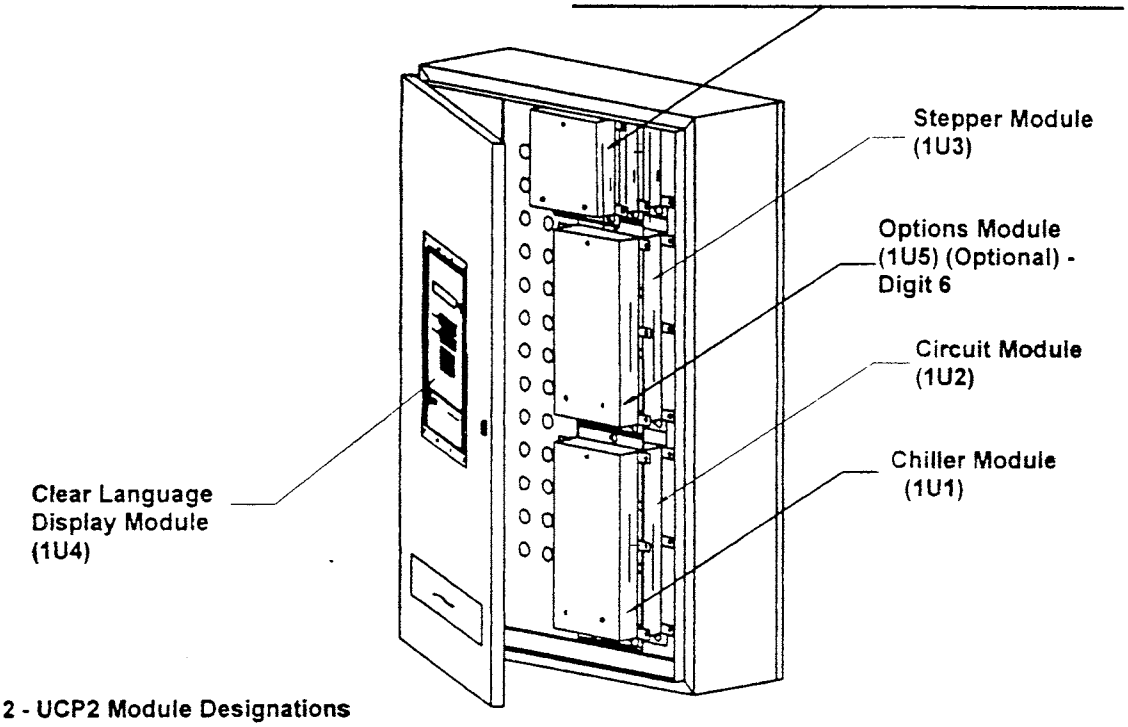

Table 2 - UCP2 Module Designations

Standard Modules		Optional Modules		
1U1	Chiller Module	1U5	Options Module	Digit 6
1U2	Circuit Module	1U6	Process Computer Module	Digit 12
1U3	Stepper Module	1U7	Printer Module	Digit 13
1U4	Clear Language Display Module	1U8	Tracer Interface Module	Digit 7
		1U9	IPCB Remote Interface Module	Digit 14
		1U10	IO Module	Digit 15 or Digit 18

Table 3 - UCP2 Equipment Designations

Device Desig.	Description	Device Desig.	Description
2U1	Starter Module	4L1	Vent Line Solenoid
3U1	Purge Module (Optional)	5S3	External Auto-Stop (Optional)
4U1	Evap. Diff. Water Press. X-Ducer (Optional)	5S4	Emergency Stop (Optional)
4U2	Cond. Diff. Water Press. X-Ducer (Optional)	5S5	Heat Pump Control Switch (Optional)
4B1	Compressor Motor	5S1	Chilled Water Flow Switch
4L2	Evap. Water Press. Solenoid (Optional)	5S2	Condenser Water Flow Switch
4L3	Cond. Water Press. Solenoid (Optional)	1T1	Control Transformer
4R3	Evap. Ent. & Lvg. Water Press. (Optional)		
4R4	Cond. Ent. & Lvg. Water Press. (Optional)		

Existing Control Panel Removal

For complete descriptions of UCP2 chiller control panel features, clear language display, control options and electrical sequence(s) of operation, refer to the current revision of CVHE-M-7. A copy is included in this retrofit kit. Additional copies may be obtained by contacting the local Trane office.

To ensure that the chiller control system retrofit procedure is performed properly, carefully review the instructions in this section, and, if necessary, contact a Trane service organization before beginning the conversion process.

1. Identify all field modifications made to the existing chiller control scheme and remove or disable; then label all field-installed wiring entering the control panel.

Important! Record a detailed description of all electrical changes made during the UCP2 retrofit process. Add a copy of this report to the chiller record file for future reference.

   Look for field-installed circuits that serve as evaporator and condenser flow interlocks, as well as those that provide the following control functions: remote current limiting, remote on/off, "proof-of- running", interface with a building automation system (BAS), etc.

2. Determine how each of the field-adapted control functions identified in Step 1 will be handled by the new UCP2 chiller control panel.

Remember the UCP2 panel:

a. provides all of the control and protection capabilities previously supplied by the AGM capacity control module (U1) and Cutler-Hammer solid state overload (U2) in pre-micro electronic control systems.

b. includes isolated contacts to operate all chiller mounted devices as well as the starter control circuit.

c. requires 115 VAC control circuit power from the starter panel. (The oil pump, oil heater, vane actuator and purge compressor are all 115-volt devices.)

Note: All CVHE control circuits, whether in the starter panel or chiller control panel, are 115-volt systems.

3. Open all starter and control panel disconnect switches and secure them in that position.

⚠ WARNING!
To prevent injury or death due to electrical shock, verify that all power supply disconnect switches are locked in the OFF position before opening control panel door or disconnecting any wires.

4. Disconnect the leads from the oil heater and relabel the oil heater leads with the equivalent wire number designations in the UCP2 control scheme. The wire numbers for the UCP2 control system can be found on the connection diagrams in this manual.

5. If installing a stepper inlet guide vane actuator, determine the inlet guide vane stroke by closing and opening the vanes and accurately measuring the length of travel. Record this length because it will be used when installing the stepper actuator.

6. Disconnect all field-installed wiring entering the control panel (identified in Step 1) from the control panel terminal strips; then detach the field-installed conduit from the control panel enclosure.

7. Remove all sensors.
8. Identify all factory-installed wiring between the unit-mounted components (e.g., vane actuator, oil sump, purge, etc.) and the control panel; make sure that the existing wire numbers on these leads are readable.

Then:

a. Relabel each of these leads with its equivalent wire number designation in the UCP2 control scheme. Use the wiring diagrams that shipped with the UCP2 panel to assure that you assign the proper wire numbers.

b. Disconnect each of these wires from the control panel terminal strip.

c. Detach the existing, factory-installed machine conduit from the control panel enclosure. This conduit will be reused, wherever possible, when the new control panel is installed.

9. Disconnect the panel pressure gauge lines (if applicable) where they enter the chiller, then valve off or plug each unit opening.

   If the refrigerant is in the chiller, the pressure must be raised to 0 psig using a means, such as heat, that will not result in excessive purging. The use of nitrogen is not acceptable and violates Federal Anti-Venting Regulations.

10. Disconnect the opposite ends of any pressure gauge lines at the control panel.
11. Cut wire ties, and unbolt conduit connections, as necessary to allow removal of the control panel.
12. Unbolt the control panel from its mounting brackets and remove it from the unit.
13. Remove the chiller nameplate from the control panel enclosure and secure it to the outside of the UCP2 control panel. If the nameplate cannot be removed, transcribe the nameplate data, using a permanent marker, on the supplied additional nameplate.

Important! The information on this original chiller nameplate is required to allow proper part identification of components not affected by the UCP2 conversion.

14. If installing a stepper inlet guide vane actuator, remove the existing vane actuator. Keep all of the connecting hardware and four of the five 115 VAC actuator leads. These will be reused when the new vane actuator is installed.

Replacing an existing CVHE control system with one based on the UCP2 control panel requires a number of wiring and hardware changes. Additional modifications are needed when this conversion is made on Model CVHB, CVHA or PCV CenTraVacs® and all competitor built chillers.

UCP2 Installation

Module Installation

All optional modules must be field installed with the supplied hardware and connected to the other modules via the Inter-Processor Communications (IPC). The IPC is a 19,200 baud asynchronous communications link.

Stack the modules as shown in Figure 2 using provided brackets.

Connect the IPC and 24 VAC between modules as shown in Figures 11, 12 and 13. Each link must have the shield connected to ground on one end and cut off and taped back on the other end.

Note: All wiring must comply with NEC guidelines as well as local codes. The Trane Company takes no responsibility for improper wiring practices.

Figure 3 -
Sensor Location

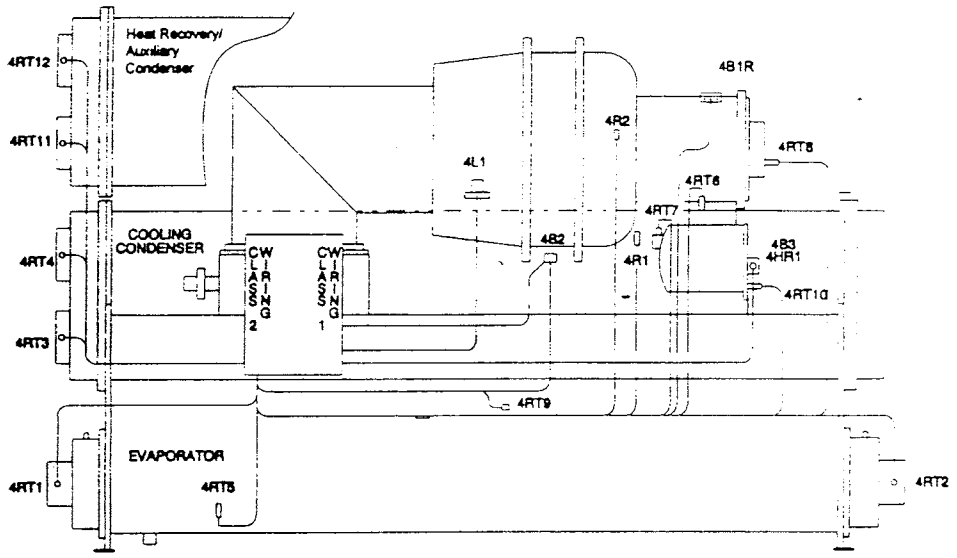

Device Desig.	Description
3R3	Condenser Refrig. Pressure Transducer (Not Shown)
4B1R	Motor Winding Temperature Sensor
4B2	Vane Actuator Motor (Stepper)
4B3	Oil Pump Motor
4HR1	Oil Tank Heater
4L1	Vent Line Solenoid
4R1	Low Pressure Oil Sensor (Oil Vent Line)
4R2	High Pressure Oil Sensor (Oil Feed Line)
4RT1,2	Entering & Leaving Evaporator Water Temperature Sensors

Device Desig.	Description
4RT1,2	Ent. & Lvg. Evaporator Water Temperature Sensors
4RT3,4	Ent. & Lvg. Condenser Water Temperature Sensors
4RT5	Saturated Evap. Ref. Temperature Sensor
4RT6	Compressor Discharge Temperature Sensor
4RT7	Bearing Temperature Sensor #1
4RT8	Bearing Temperature Sensor #2
4RT9	Saturated Condenser Refrig. Temperature Sensor
4RT10	Oil Temperature Sensor
4RT11,12	Ent. & Lvg. Heat Recovery/Aux. Cond. Water Temperature Sensors

Figure 4 -
UCP2 Field External Devices Wiring Layout Diagram

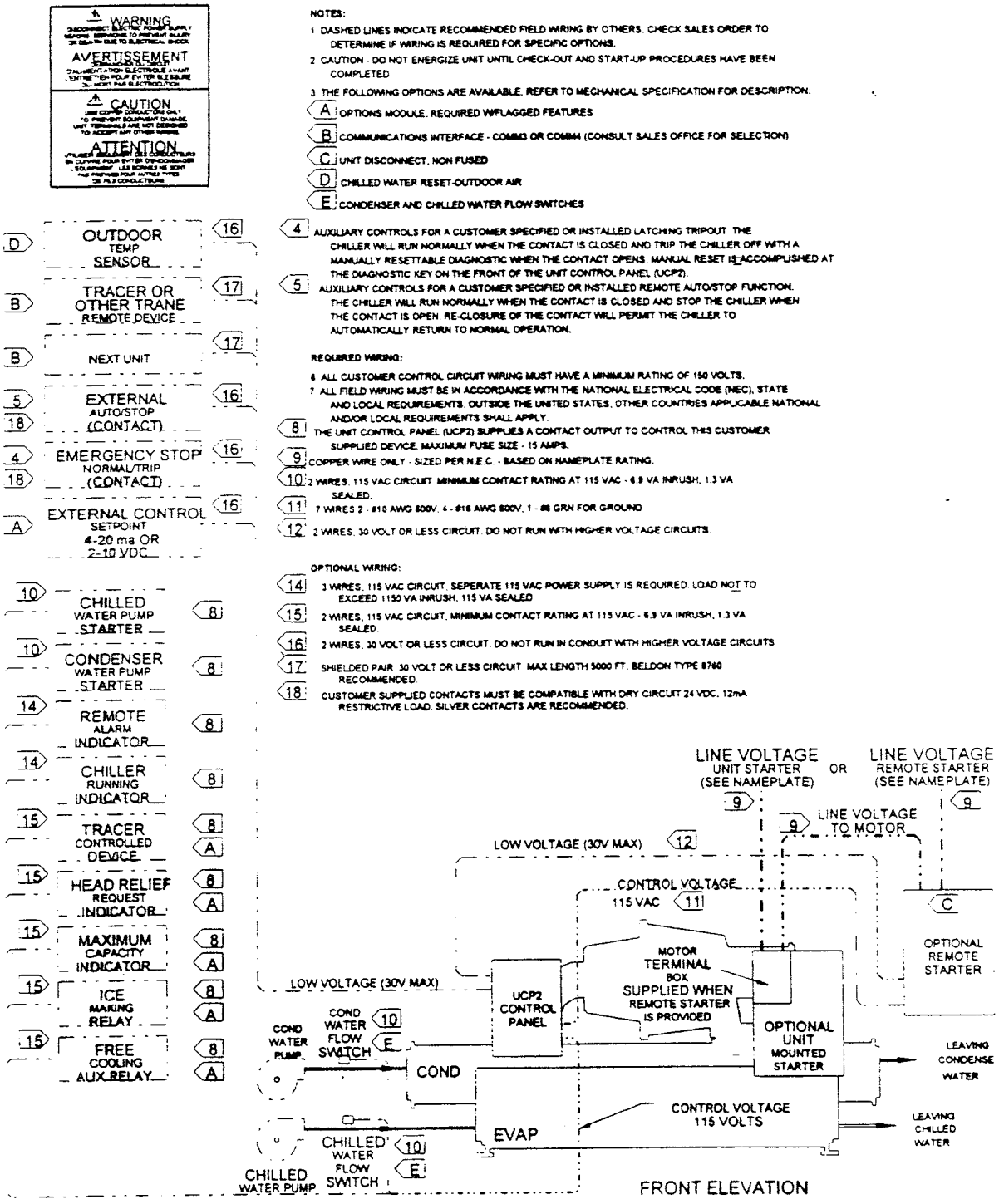

Module Dip Switch Settings

The Options module has dip switch settings used to set up the board for 2-10 VDC or 4-20 mA signal inputs. The switch settings for external current limit setpoint and external chilled water setpoint are listed below:

Options Module

	Switch	2-10V	4-20 mA
External Current Limit	SW2-1	Off	On
External Chilled Water	SW3-1	Off	On

Likewise, the TCI modules require that their boards be configured per the following dip switch settings.

Module	Switch SW1 Position		
	1	2	3
Tracer COM 3	Off	Off	Off
Tracer COM 4	Off	On	Off
IPC Buffer	Off	Off	On
Printer	Off	Off	On

TCI Printer Interface to Printer Setup

A dedicated serial printer such as Trane part number PTR0001 is recommended.

Suggested Serial Communications Settings for Printer Interface	
Baud Rate	4800
Data Bits	8
Stop Bits	1
Parity	None
Hand Shaking	Xon - Xoff

Enter these settings in the UCP2 Clear Language Display (CLD). Also enter the same settings in the printer (typically dip switches, see printer manual for details). **It is very important that the Serial Communication Settings on the CLD and the printer are exactly the same!**

See Figure 4a for printer cable connections. The pin6-pin20 connection on the DB25 is required for Trane serial printer part number PTR0001.

Figure 4 a - Serial Printer Connections

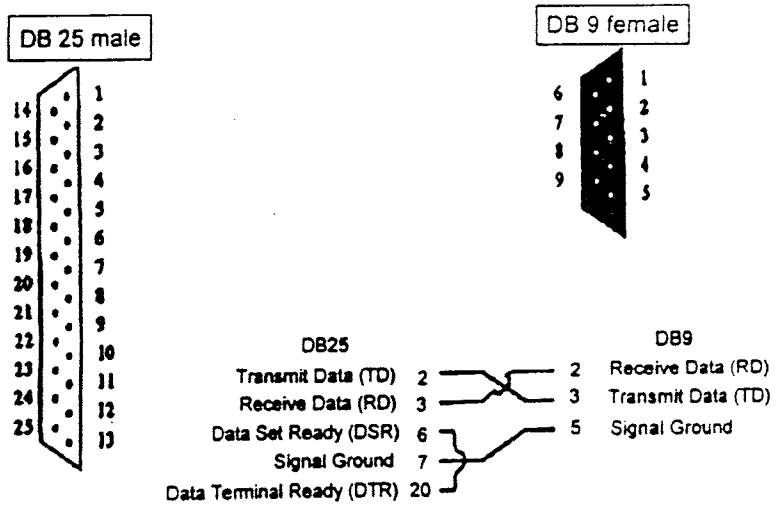

Temperature Sensor Installation

The UCP2 temperature sensors require a 1/2" bulbwell (See Figure 5 for details). When the sensor is installed in a bulbwell:

- add thermastic paste to each bulbwell before inserting the sensor
- ensure that the sensor "bottoms out" at the base of the bulbwell.

See Figure 3 for the sensors' locations. Additional instructions for installation follow.

Figure 5 -
Thermistor Bulbwell

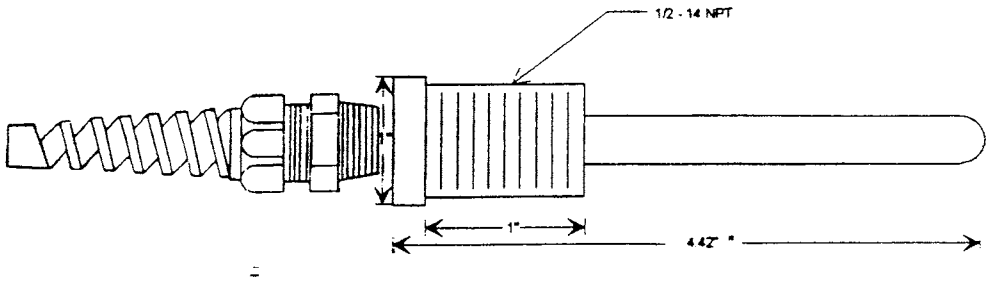

*For Saturated Evaporator Refrigerant Temperature, the dimension is 6.62".

Standard Sensors Included in UCP2 Retrofit Kit

- **Entering Evaporator Water Temperature Sensor (4RT1) -** Install the bulbwell where the start-stop switch sensor was located; or replace the current bulbwell with the new one provided in the UCP2 Retrofit Kit. See Note 1 for external mounting information.

Note 1 - For external sensor mounting see section titled "Externally Mounted Temperature Sensors".

- **Leaving Evaporator Water Temperature Sensor (4RT2) -** Replace the existing bulbwell or mount externally. See Note 1 for external mounting information.

Note: Mount 4RT2 in a bulbwell for proper control performance on systems with short loop times.

- **Entering Condenser Water Temperature Sensor (4RT3) -** Replace the existing bulbwell or mount externally. See Note 1 for external mounting information.
- **Leaving Condenser Water Temperature Sensor (4RT4) -** Replace the existing bulbwell. Sensor may be externally mounted. See Note 1 for external mounting information.

Note: 4RT1 and 2 as well as 4RT3 and 4 must be matched pairs of sensors. Make sure they are not separated.

⚠ Caution:
If drilling into the bottom of the Evaporator or Condenser is necessary, the refrigerant charge must be removed. Failure to do so could result in avoidable refrigerant leakage to the atmosphere and a violation of the Federal Anti-Venting Laws.

- **Saturated Evaporator Refrigerant Temperature Sensor (4RT5) -** Remove the 1/4" angle valve located near the bottom of the evaporator and install the bulbwell.
- **Bearing Temperature Sensors #1 & #2 (4RT7,8) -** Read the section titled "Externally Mounted Temperature Sensors" and mount each of these sensors on the underside of the bearing oil return lines. Locate each sensor beneath the section of line that angles downward at 45°.
- **Saturated Condenser Refrigerant Temperature Sensor (4RT9) -** 4RT9 must be exposed to the leaving liquid at the bottom of the condenser upstream of any orifices or float valves. If the Condenser Refrigerant Pressure Transducer (3R3) is installed, this sensor may be externally mounted. See Section "Externally Mounted Temperature Sensors".
- **Oil Temperature Sensor (4RT10) -** Install the bulbwell in the oil sump well.

Optional Temperature Sensors

- **Compressor Discharge Temperature Sensor (4RT6)** - Replaces the High Temperature Limit Switch for Hot Gas Bypass. Generally located inside the volute.
- **Auxiliary/Heat Recovery Entering Temperature Sensor (4RT11)** - Use with heat exchangers.
- **Auxiliary/Heat Recovery Leaving Temperature Sensor (4RT12)** - Use with heat exchangers.
- **Outdoor Air Temperature Chilled Water Reset Sensor (RT1)** - Mount this sensor in the fresh air intake, or on the north wall of the building out of direct sunlight.
- **Tracer Temperature Sensor (5RT1)** - Input for a customer-supplied thermistor to monitor temperatures at a Tracer Building Automation System. Monitors ambient temperature.
- **Motor Winding Temperature Sensors 1, 2, & 3 (4B1R2,3,4)** - Uses existing motor temperature sensors. If RTD sensor is used, wire directly to terminals. If a motor temperature thermostat is currently installed, refer to the Motor Temperature Interface Section for additional wiring instructions.

Externally Mounted Temperature Sensors

To mount sensors externally:

1. Remove the paint, rust and other material from the pipe surface; then use an emery cloth to expose bare metal.

2. Secure the sensor to the pipe surface with thermally conductive, high strength, room temperature curing adhesive which bonds to most material found in the electronics industry. Make sure that the sensor retains contact with the pipe for accurate measurement.

3. Wrap the sensor with Armaflex insulation.

⚠ WARNING!
High strength adhesives typically are an eye irritant and may irritate sensitive skin. If adhesive comes in contact with skin, flush affected area with water for 15 minutes and seek medical attention. Refer to the package for additional information.

Refrigerant and Oil Pressure Transducer Installation

Install the following pressure transducers supplied with the UCP2 Retrofit Kit, see Figure 6. Connect the transducers to the UCP2 at the terminals identified in Figure 11:

- **Oil Sump Pressure Transducer (4R1)** - Installed in the vapor space for the oil sump.
- **Oil Pump Discharge Pressure Transducer (4R2)** - Installed in the supply oil line after the filter or any shut-off valves.

Note: The oil pressure transducers (4R1, 4R2) are used to prove oil flow. Competitive chillers may operate at oil pressures higher than that found on CenTraVacs®. If installing a UCP2 conversion package on a competitive chiller, determine the oil sump and oil pump pressures of the machine. The working pressure of the transducers is between -15 and +35 psig. If oil pressures exceed the limits of the working pressure range or if the variable oil differential pressure cutout setpoint (adjustable between 6 and 35 psid) is not suitable for detecting oil flow, UCP2 will accept a binary input from a differential pressure switch. Install a field supplied oil differential pressure switch across the oil sump and oil supply line.

- **Condenser Refrigerant Pressure Transducer (3R3)** - Although installation of this supplied sensor is optional, Trane recommends installing it to improve the condenser pressure limiting function. 3R3 must be installed for proper control if the Saturated Condenser Refrigerant Temperature Sensor (4RT9) is externally mounted, due to the slow response time of an externally mounted 4RT9.

Water Pressure Transducer Installation

The Water Pressure Transducer Option monitors the condenser and evaporator water flow rate in gallons per minute (GPM) and monitors the tons of cooling produced by the evaporator at the UCP2 display.

There are two available Water Pressure Transducer Kits which require field assembly. See Figures 8 and 9 for details.

- **The <150 psig kit** is for use with Water Boxes under 150 psig. The 4L2 and 4L3 solenoid valves alternate the input to the 4R3 and 4R4 pressure transducers between the entering and leaving water lines for the shell.
- **The >150 psig kit** uses 4U1 and 4U2 differential pressure transducers and two pressure relief valves to protect the differential pressure transducers.

Note: Trane suggests attaching the mounting bracket for the water pressure transducers under the suction elbow bolts.

- **Evaporator Entering/Leaving Water Pressure Transducer (4R3)** - Use 0.25 OD tube to connect to the appropriate water box. See Figures 7 and 8 for mounting/ piping instructions.
- **Condenser Entering/Leaving Water Pressure Transducer (4R4)** - Use 0.25 OD tube to connect to the appropriate water box. See Figures 7 and 8 for mounting/ piping instructions.
- **Evaporator Differential Water Pressure Transducer (4U1)** - Use 0.25 OD tube to connect to the appropriate water box. See Figures 7 and 9 for mounting/ piping instructions.
- **Condenser Differential Water Pressure Transducer (4U2)** - Use 0.25 OD tube to connect to the appropriate water box. See Figures 7 and 9 for mounting/ piping instructions.

Figure 6 - Pressure Transducer

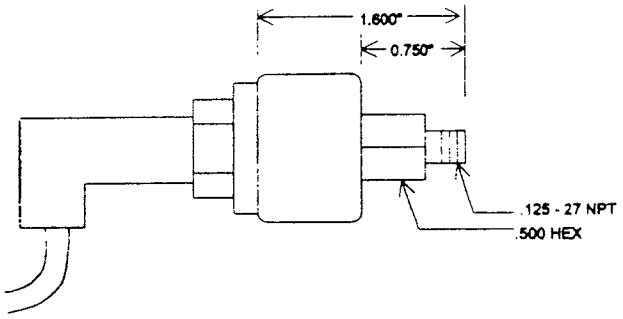

Water Pressure Transducers Setup

Before the UCP2 can convert the pressures into GPM's and tons, five constants must be set in the Field Startup group as listed below. Note the screens to input these constants are available only after installing the Water Pressure Transducer Option in the Service Settings - Machine Configuration.

To determine these constants, the pressure drop (Δ P) for two different flow rates (GPM) must be known. One of these points can be the design GPM and Δ P as shown on the chiller's submittal. The other point must come from the chiller sales selection information which shows Δ P versus GPM for given condensers and evaporators in various chiller sizes. Select a second point on the same line as defined by the design submittal. These points are now defined as GPM1, Δ P1, GPM2 and Δ P2 and are used in the steps listed below. Refer to the example calculation that follows.

Note: A scientific calculator is required for the following calculations. Functions must be available to take the natural log (ln) of a number and also raise a number to a power $(\Delta P1)^n$.

1. Evaporator Flow Equation Exponent:

$$n = \frac{\ln\left(\frac{GPM1}{GPM2}\right)}{\ln\left(\frac{\Delta P1}{\Delta P2}\right)} = 0.5XXX$$

The result of this equation, **n**, will be a number in the form of 0.5XXX. The digits **XXX** are entered into the UPC2 under the Evaporator Flow Equation Exponent.

2. Evaporator Flow Coefficient:

$$c = \frac{GPM1}{(\Delta P1)^n}$$

Note: n was determined in Step 1.

The result (c) should be rounded to the nearest 5 and entered into the UCP2 under the Evaporator Flow Coefficient.

3. Condenser Flow Equation Exponent:

Use the same equation as in Step 1, but with the condenser data. Enter into the UCP2 under the Condenser Flow Equation Exponent.

4. Condenser Flow Coefficient:

Use the same equation as in Step 2, but with the calculated result for **n** from Step 3. The result should be rounded to the nearest 5 and entered into the UCP2 under the Condenser Flow Coefficient.

5. Evaporator Fluid Coefficient:

Use the Table 4 to determine the Fluid Coefficient "D" and enter into the UCP2 under the Evaporator Fluid Coefficient.

Table 4 - Fluid Coefficient "D" for 40° F

Fluid	%	D
Water		418
Calcium Chloride Solution	11	386
	20	364
	30	354
Sodium Chloride Solution	5	406
	15	392
	25	392
Ethylene Glycol Solution	10	401
	30	378
	50	347
Polyethylene Glycol Solution	16	410
	30	393
	50	364

⚠ Caution:
Use of impure fluids will display incorrect data. Pressure Transducer lines may plug which can damage the transducers.

Example for Set-up

For a standard length evaporator shell with internally enhanced tubes for a CVHE 500 with evaporator bundle size of 550, contact the Sales Office for **Pressure Drop Curves** information to determine the second point. The design point is 880 GPM at a 10 ft. pressure drop.

Design:

GPM1 = 880
Δ P1 = 10

From Selection Program :

GPM2 = 1000
Δ P2 = 12.5

1. Determine Evaporator Flow Equation Exponent

$$n = \frac{\ln\left(\frac{GPM1}{GPM2}\right)}{\ln\left(\frac{\Delta P1}{\Delta P2}\right)} = \frac{ln\left(\frac{880}{1000}\right)}{ln\left(\frac{10}{12.5}\right)}$$

$$= \frac{-.1278}{-.2231} = .5729$$

729 = Exponent

2. Determine Evaporator Flow Coefficient:

$$c = \frac{GPM1}{(\Delta P1)^n} = \frac{880}{(10)^{.5729}} = 235.29$$

235 = Coefficient

3. Repeat Step 1 for the Condenser Flow Equation Exponent using condenser data.

4. Repeat Step 2 for the Condenser Flow Coefficient using condenser data.

5. Determine Evaporator Fluid Coefficient. (Water in this example.)

418 = Coefficient

These five constants are now set in the field startup group.

Figure 7 - Water Pressure Transducer Tubing
See Figure 8 for <150 PSIG
See Figure 9 for >150 PSIG

Water Box Assemblies

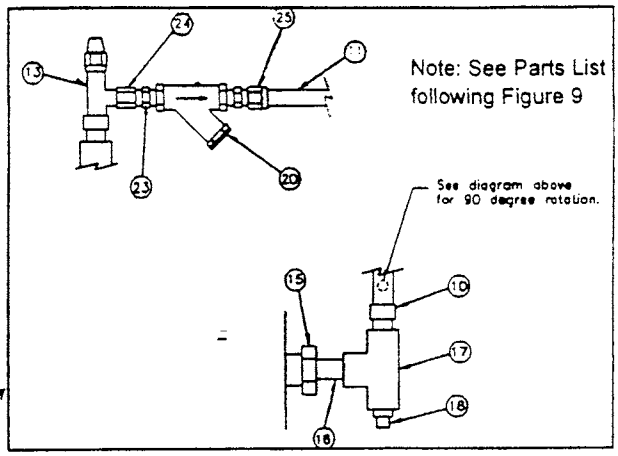

— Field Tubing of Water Pressure Transducers
Note: Use copper lines
Use Teflon tape for all threaded connections

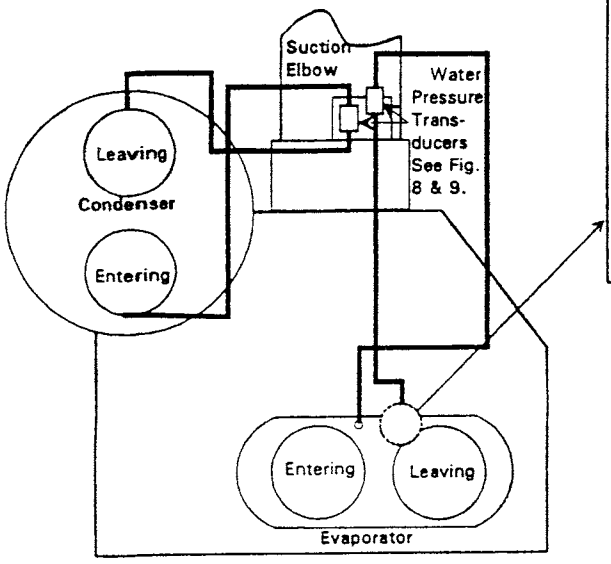

⚠ Caution:
Do not close the valve for prolonged periods. Increased temperature could result in expansion of liquid in the copper tubing which can damage the pressure transducers.

Figure 8 -
Water Pressure Transducer Assembly
Absolute (<150 PSIG)

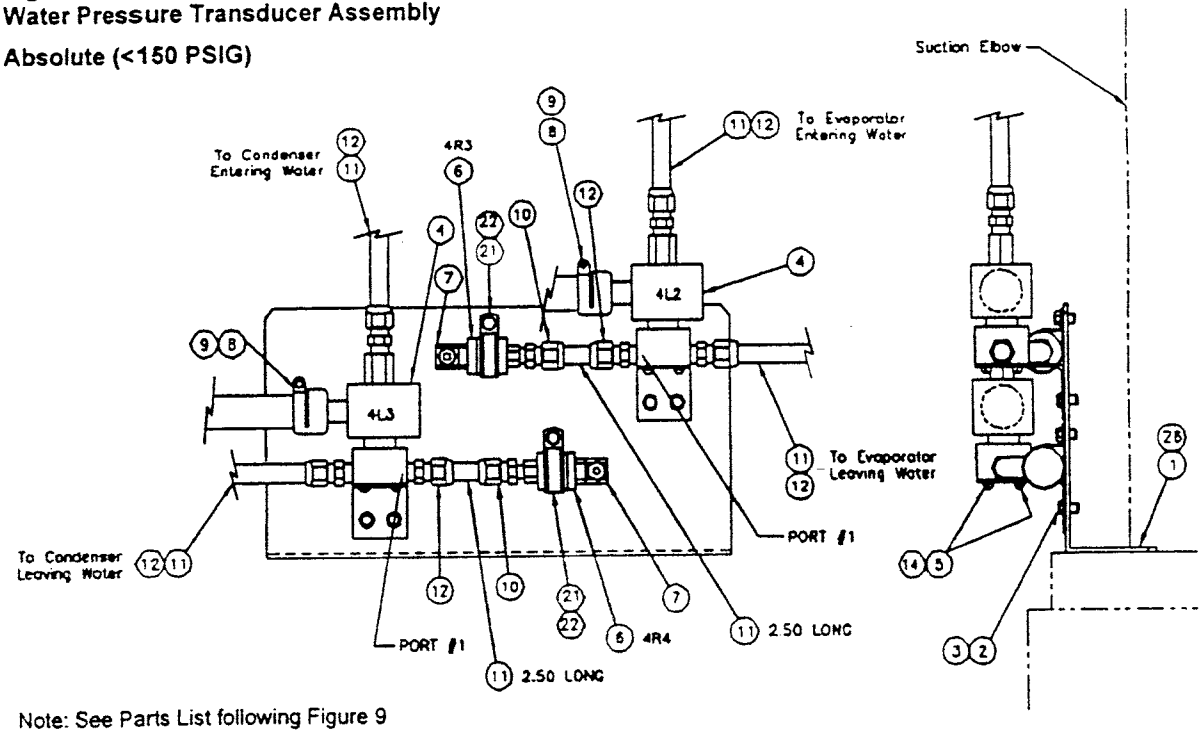

Note: See Parts List following Figure 9

Figure 9 -
Water Pressure Transducer Assembly
Differential (>150 PSIG)
Requires Option Module

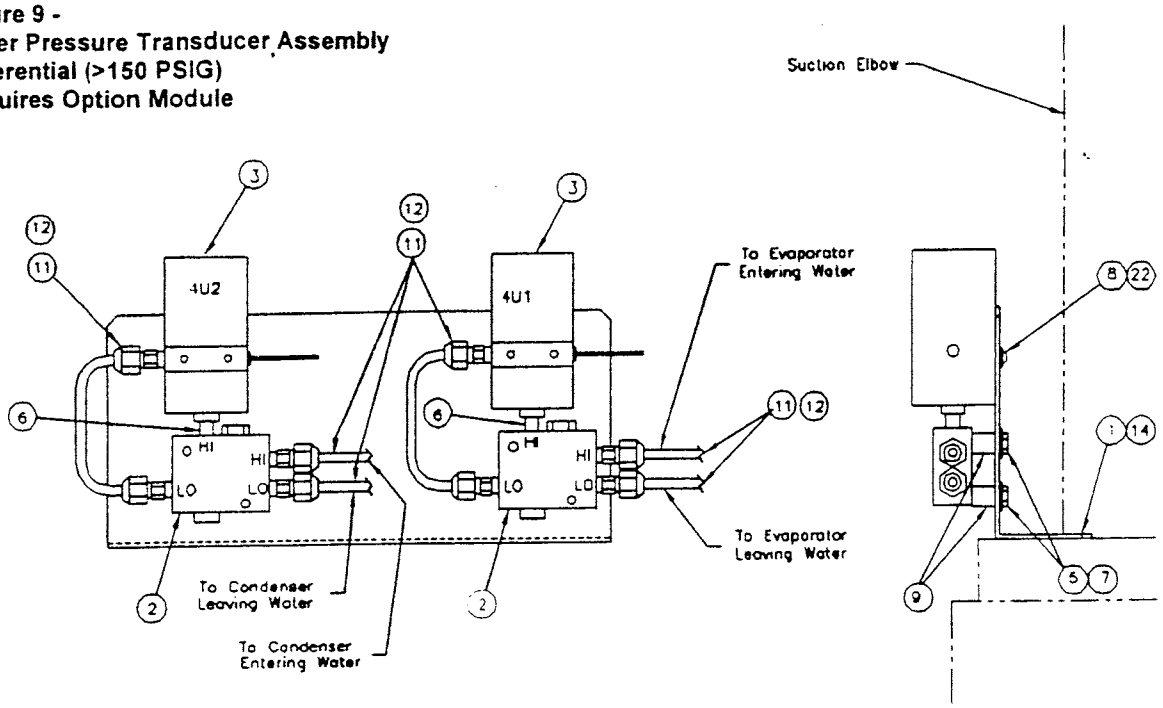

Note: See Parts List below

Water Pressure Transducers Parts Lists

<150 psig Water Pressure Assemblies			>150 psig Water Pressure Assemblies			Water Box Assemblies		
#	Description	Qty	#	Description	Qty	#	Description	Qty
1	Support, Compr 032-127	1	1	Support, Compr 032-127	1	10	Connector, .25 OD x .12 NPT	4
2	Bracket, Solenoid Valve UCP-2	2	2	Valve, Relief	2	11	Tube, .25 OD x .040W Nylon	4
3	Screw, .25-20 x .50 Thd	4	3	Transducer, Pressure 0-150	2	13	Valve, .25 NPTE X .25 MFL	4
4	Valve, .125 NPTI Solenoid	2	5	Washer, .26 ID x .62 OD PL	4	15	Bushing, .75 x .25 NPS Hex	4
5	Screw, 8-32 x.38 RDH Mach	4	6	Nipple, .12 NPS x .75 BLK	2	16	Nipple, .25 NPS x 1.50 BLK	4
6	Transducer, Pressure 0-150	2	7	Screw, .25-20 x 1.25 Hex Cap	2	17	Tee, .25 NPS 300# MI	4
7	Cable, Assembly Transducer	2	8	Washer, .15 ID x .37 OD	4	18	Plug, .25 NPFT	4
8	Conduit, .50 NOM (#)	4	9	Pipe, .25 NPS x .199	4	20	Strainer, .25 NPT	4
9	Squeeze, Conn., .50 NOM Strt.	4	11	Tube, .25 OD x .040W Nylon (#)	4	23	Adapter, .25 MFL X .25 NPTE	4
10	Connector, .25 OD x .12 NPT	4	12	Adapter, .25 OD x .12 NPTE	6	24	Union	4
11	Tube, .25 OD x .040W Nylon (#)	4	14	Lk Wash, .164 Nom HLCL Spr	4	25	Connector, .25 OD X .25 NPT	4
12	Adapter, .25 OD x .12 NPTE	6	22	Screw, 10-32 x .38	2	26	Plug, .50 NPTF	1
14	Lk Wash, .164 Nom HLCL Spr	4	*	Plug, .50 NPTF	1			
21	Clamp, 1.00 Dia	2	*	STL .121 Min x 41 x 90				
22	Screw, 10-32 x .38	2	*	Angle	2			
26	Washer, .53 ID x 1.06 OD	2	*	Bag, 9 x 12.5 x 3 Mil w/Trane	1			
*	STL .121 Min x 41 x 90							
*	Angle	2						
*	Bag, 9 x 12.5 x 3 Mil w/Trane	1						

* Not Illustrated

(#) Field Supplied

Condenser High Pressure Switch

The supplied switch must be installed instead of the existing switch. It is typically mounted inside the UCP2 panel. The two dry contacts on the new switch will be used with the Circuit Module (Figure 11) and the Starter Module (Figures 20 and 21). The normally open contact goes to the circuit module (1U2 pin J26-2) and the normally closed contact goes to terminal 1TB1-9 in the main control panel.

Refrigerant Monitor

There are two options:

- The 4-20 mA analog output from a refrigerant monitor can be connected to the UCP2 circuit Module, 1U2. This will allow the proportional output of the monitor to be communicated to a Tracer BAS.

  Monitors which source the 4-20 mA current, such as the Trane Model RMWC, should be connected to J5-5 (+) and J5-6 (-). Monitors which do not source their own current would connect to J5-4 (source), J5-5 (+) and J5-6 (-). See Figure 11.

  Note: Select analog for refrigerant monitor type in UCP2 menu service settings - machine configuration.

- Trane RMWD refrigerant monitors with Version two software will communicate directly to UCP2 via the interprocessor communication link (IPC).
  The connection should be made to the UCP2 stepper module 1U3 at J1-3 (+), J1-4 (-) and J1-6 (Shield to GND).

  Note: Select IPC for refrigerant monitor type in UCP2 menu service settings - machine configuration.

Stepper Actuator Binary Position Indicator (BPI)

If installing a stepper inlet guide vane actuator, the BPI must be installed on the stepper actuator. To install the BPI, set the actuator to a 90° vane position (fully open) and place the BPI in the slide track of the Inlet Guide Vane (IGV) actuator. See Figure 10. Connect ohm meter leads to the BPI wires and slide the switch from the front of the track toward the back until the ohm meter indicates switch closure (approx. 46 ohms). Mark a spot adjacent to the leading edge of the switch. Starting from the back of the track, move the switch forward until the switch closes again and mark the spot adjacent to the leading edge of the BPI switch. Move switch to the midpoint of the two marks and firmly secure with the two setscrews provided.

Figure 10 -
Typical BPI Switch Installation

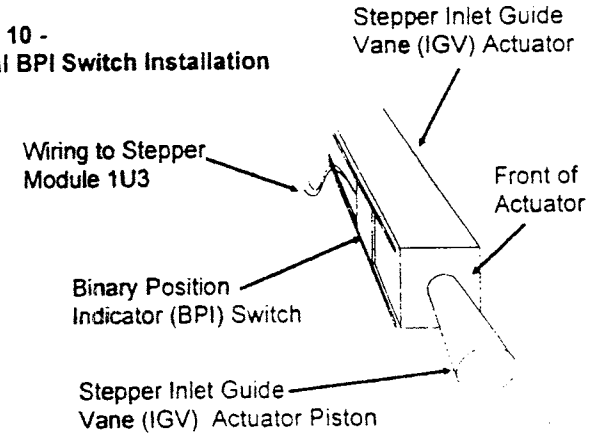

Table 5 -
UCP2 Retrofit Field Wiring

Description of Wiring	Required/ Optional	UCP2 Terminations	Other Termination	Wire #'s
Chiller Module (1U1)	**R**	**Figure 12**		
Communication Link from Purge	O	J1C-3,4,6 (Lower Plug)	3U1-J1-1,2	70,71
Communication Link from Starter	R	J1D-3,4,6 (Upper Plug)	2U1-J1-1,2	15,16
Evap Entering Water Temperature	R	J3-1,2	4RT1	
Evap Leaving Water Temperature	R	J3-3,4	4RT2	
Cond Entering Water Temperature	R	J3-5,6	4RT3	
Cond Leaving Water Temperature	R	J3-7,8	4RT4	
Evap Water Pressure Solenoid	O	J4-2,1	1TB1-14,4L2,1TB1-4	5M,21A,2G
Ext. Auto Stop (jumpered if not used)	O	J5-1,2	5S3	
Emergency Stop (jumpered if not used)	O	J5-3,4	5S4	
Outdoor Air Temp Ambient CWR	O	J5-5,6	RT1	
Cond Water Press Solenoid	O	J6-2,1	1TB1-14,4L3,1TB1-4	5J,22A,2H
Heat Pump Control	O	J7-5,6	5S5	
Evap Ent & Lvg Wtr Press	O	J9-1,2,3,4,5	4R3	
Cond Ent & Lvg Wtr Press	O	J9-6,7,8,9,10	4R4	
Chilled Water Pump Relay	O	J12-2,1	115 VAC,5K1	
Cond Water Pump Relay	R	J14-2,1	115 VAC,5K2	
Comp Running Relay	O	J16-3,2,1	115 VAC,5K3-NC,5K3-NO	
Alarm Relay, MMR (Latching)	O	J18-3,2,1	115VAC,5K4,DS1	
Limit Warning Relay	O	J20-2,1	115VAC,5K5	
Alarm Relay, MAR (Non-Latching)	O	J22-2,1	115VAC, 5DS2	
Chilled Water Flow Switch	R	J26-2,1	1TB1-12,3,10,5K1	12A,2D-
Cond Water Flow Switch	R	J28-2,1	1TB1-13,3,11,5K2	13A,2E
Circuit Module(1U2)	**R**	**Figure 11**		
Comm Link from Options Module	O	J1D-3,4	1U5-J1-1,2	198D,199D
Motor Winding Temps 1,2,3	R	J3-1,3,5,6	4B1R2,3,4,Common	
Oil Temperature	R	J3-7,8	4RT10	
Oil Diff. Pressure Switch	R[1]	J5-1,2	Switch	
Refrigerant Monitor	O	J5-4,5,6	Monitor	
Cond Press/Rfgt Diff Pressure	O	J7-1,2		
Cond Refrigerant Pressure	O	J7-8,9,10,11,12	3R3	
Oil Sump Pressure	R	J9-1,2,3,4,5	4R1	
Oil Pump Discharge Pressure	R	J9-6,7,8,9,10	4R2	
Vent Line Solenoid	R	J16-3,2,1	1TB1-3,4L1-NC,4L1-NO	41B,2X
Oil Tank Heater	R	J20-2,1	4HR1,1TB1-4	42A,N
Oil Pump Motor	R	J22,2,1	1TB1-7,4K8,1TB1-8	9B,9A
Cond High Pressure Switch	R	J26-2,1	3S1-NO,1TB1-4	7B,2B
Stepper Module (1U3)	**R**	**Figure 11**		
Comm Link from RMWD RFGT. Monitor	O	J1-3,4,6	Monitor	
Saturated Evap Refrigerant Temp	R	J5-1,2	4RT5	
Compressor Discharge Temp (HGBP)	O	J5-3,4	4RT6	
Bearing Temp 1	O	J5-5,6	4RT7	
Bearing Temp 2	O	J5-7,8	4RT8	
Stepper Motor Vane Actuator	R[2]	J8-1,2,3,4	4B2	
IGV Actuator BPI	R[2]	J11-1,2	BPI from 4B2	
Saturated Cond Refrigerant Temp	R	J11-3,4	4RT9	
Clear Language Display Mod. (1U4)	**R**	**Figure 11**		

1 Required only if oil sump and oil pump pressure transducers can not be used.
2 Required only if IGV actuator type is stepper motor.

Table 5 - Continued
UCP2 Retrofit Field Wiring

Description of Wiring	Required/ Optional	UCP2 Terminations	Other Termination	Wire #'s
Options Module (1U5)	**O**	**Figure 13**		
Comm Link from Circuit Module	O	J1-1,2	1U2-J1-3,4	198D,199D
Comm Link from Com4,Com3,IPCB or Printer Module	O	J1-3,4	1U7,8,9,11-J1-1,2	198,199
24 VAC	O	J2-2,1	1U10-J2-1,2	101F,102F
24 VAC	O	J2-3,4	1U1-J2-1,2	101E,102E
Auxiliary Heat Recovery Entering	O	J3-1,2	4RT11	
Auxiliary Heat Recovery Leaving	O	J3-3,4	4RT12	
External Free Cooling Switch	O	J3-5,6	5S6	
Ice Making	O	J3-7,8	5S7	
Free Cooling Actuator Closed	O	J5-1,2	4B12,13	118A,119A,120A,120B
Evaporator Differential Water Press.	O	J5-4,5	4U1	
% RLA Compressor	O	J7-3,4	External Output	
Tracer Temperature Sensor	O	J7-7,8	5RT1	
External Current Limit Setpoint	O	J7-11,12	External Input[3]	
Ice Making Relay	O	J8-2,1	115 VAC,5K6	
External Chilled Water Setpoint	O	J9-4,5	External Input[3]	
Cond Differential Water Pressure	O	J9-9,10	4U2	
Head Relief Request Relay	O	J12-2,1	115VAC,5K7	
Maximum Capacity Relay	O	J14-2,1	115VAC,5K8	
Free Cooling Actuator Relay #1	O	J16-3,2,1	1TB1-11,4B12,1TB1-3	5G,34A,45A, 2AG
Tracer Controlled Relay	O	J18-3,2,1	115 VAC	5K9
Free Cooling Auxiliary Relay	O	J20-2,1	115VAC,Coil-NO	
Free Cooling Actuator Relay #2	O	J24-3,2,1	1TB1-11,4B13,1TB1-3	5H,46A,37A, 2AH
IPC Buffer Module (1U9)	**O**	**Figure 12**		
Comm Link to Stepper or Options Module	O	J1-1,2	1U3,5-J1-3,4	198,199
24 VAC	O	J2-1,2,3,4	1U1-J2-3,4 or 1U5-J2-3,4	101,102
Buffered IPC	O	J3A-1,2	Remote CLD	
Printer Com Module (1U7)	**O**	**Figure 12**		
Comm Link to Stepper or Options Module	O	J1-1,2	1U3,5-J1-3,4	198,199
24 VAC	O	J2-1,2	1U1-J2-3,4 or 1U5-J2-3,4	101,102
Printer Com	O	J4	Printer	
Tracer Com3 Module (1U8)	**O**	**Figure 12**		
Comm Link to Stepper or Options Module	O	J1-1,2	1U3,5-J1-3,4	198,199
24 VAC	O	J2-2,1	1U1-J2-3,4 or 1U5-J2-3,4	101,102
Isolated Bi-directional Communications Link	O	J3-1,2	Tracer 100	
Tracer Com4 (1U11)	**O**	**Figure 12**		
Comm Link to Stepper or Options Module	O	J1-1,2	1U3,5-J1-3,4	198,199
24 VAC	O	J2-2,1	1U1-J2-3,4 or 1U5-J2-3,4	101,102
Isolated Bi-directional Communications Link	O	J3A-1,2	Tracer Summit	
IO Module (HGBP) (1U10)	**O**	**Figure 13**		
Comm Link from Stepper Module	O	J1-1,2	1U3- J1-3,4	198,199
24 VAC	O	J2-3,4	1U1-J2-1,2 or 1U5-J2-1,2	101F,102F
HGBP End Switch	O	J6-1,2	1TB1-3,4B5,1TB1-11	5L,32A,2F
HGBP Valve	O	J8-1,2,3	1TB1-11,4B5,1TB1-3	5F,35A,36A,24B
IO Module (Pulse Output) (1U10)	**R[4]**	**Figure 13**		
Comm Link from Stepper Module	R	J1-1,2	1U3- J1-3,4	198,199
24 VAC	R	J2-3,4	1U1-J2-1,2 or 1U5-J2-1,2	101F,102F
Induction Motor Vane Actuator End Switch	R	J6-1,2	1TB1-3,4B5, 1TB1-11	5L,32A,2F
Induction Motor Vane Actuator	R	J8-1,2,3	1TB1-11,4B5, 1TB1-3	5F,35A,36A,24B

3 External Inputs are 2-10 VDC/4-20 mA selectable, note polarity on wiring diagram.
4 Required only if IGV actuator type is induction motor.

Figure 11 - UCP2 Schematic Wiring for Clear Language Display, Stepper and Circuit

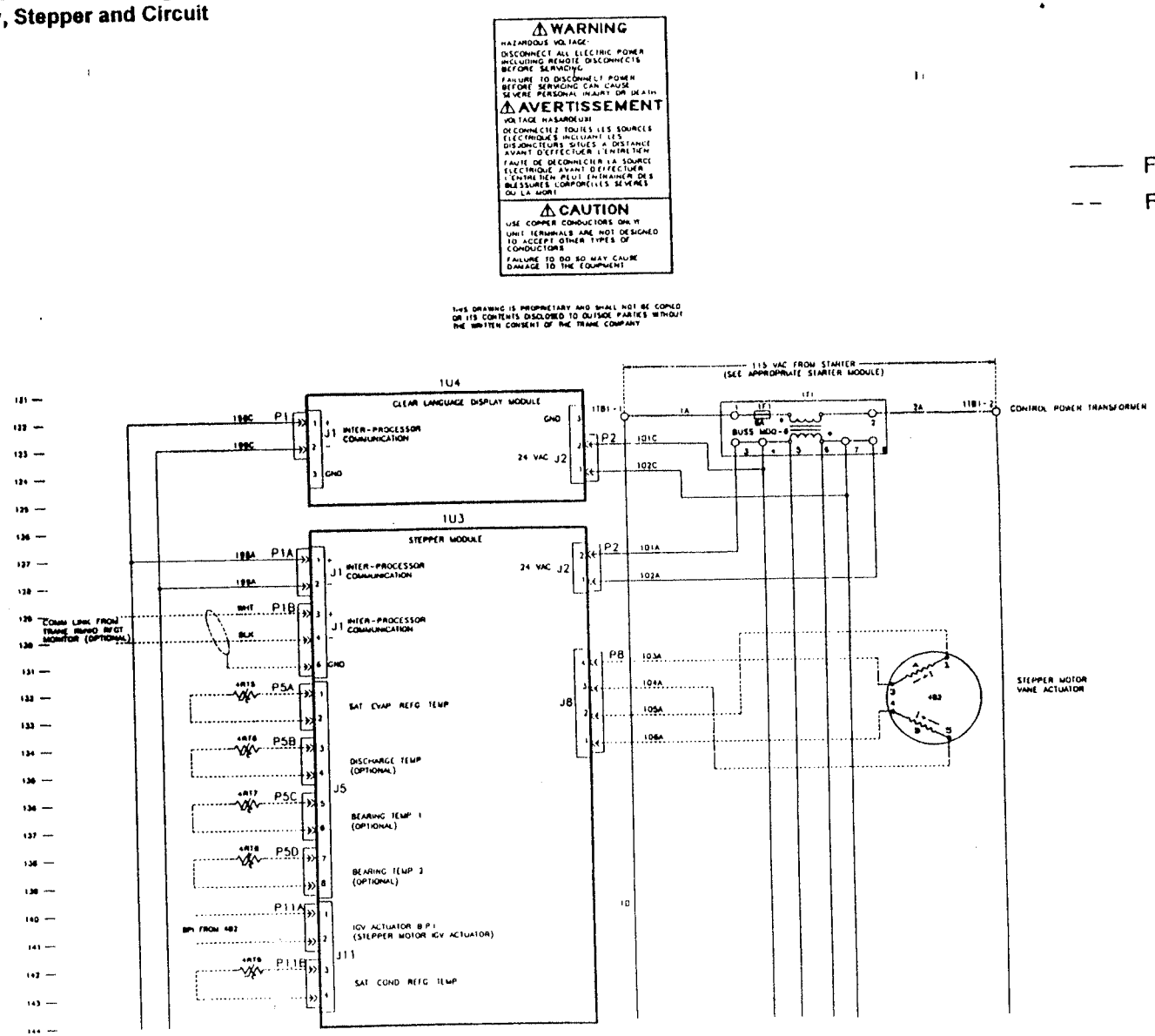

Figure 11 - (Continued)
UCP2 Schematic Wiring for Clear Language Display, Stepper and Circuit Modules

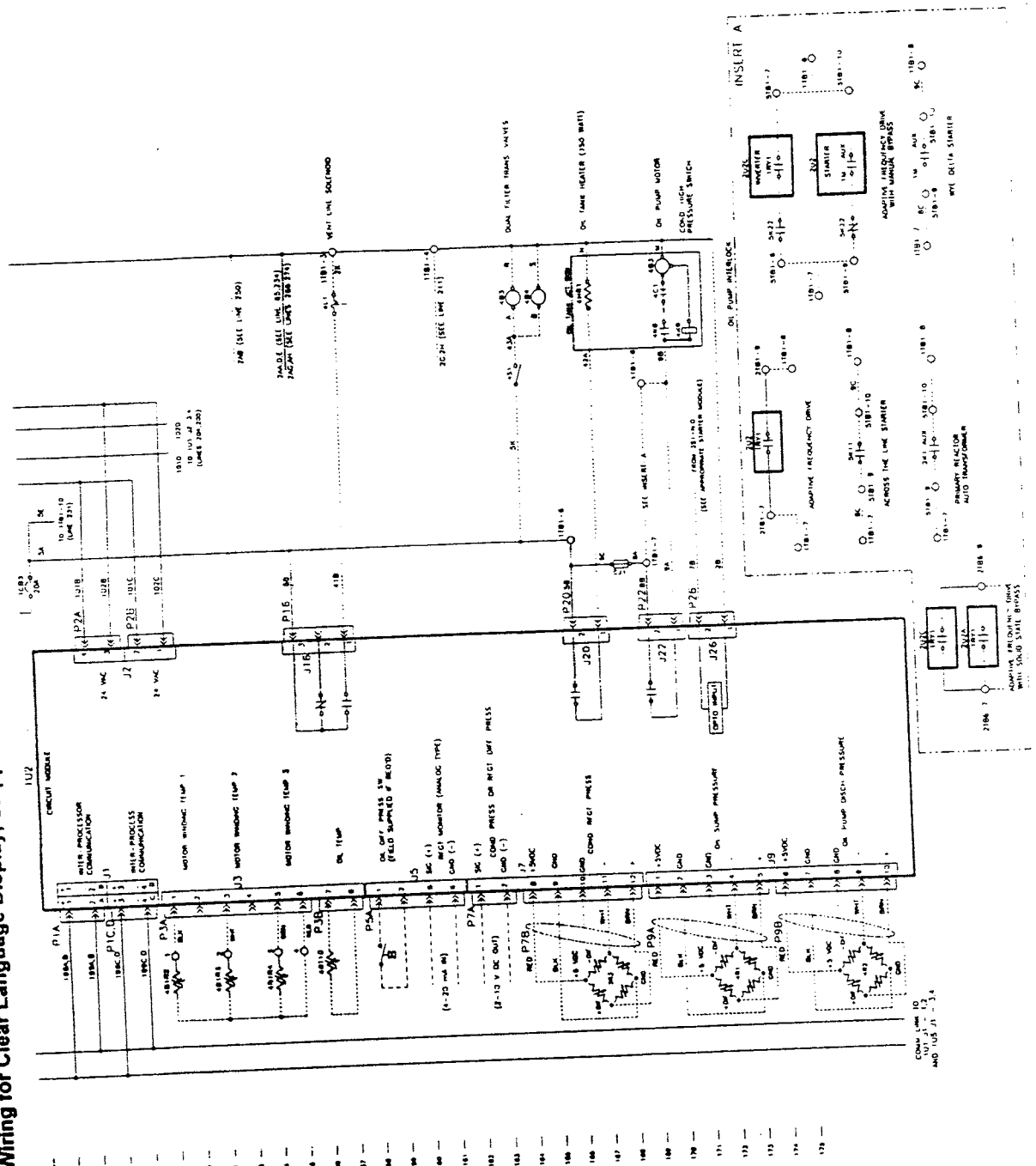

Figure 12 - UCP2 Schematic Wiring Diagram for Chiller, Tracer Comm, Printer, and IPCB

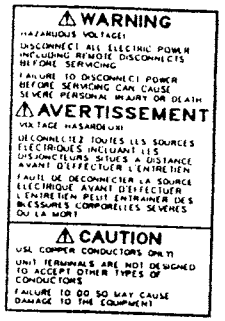

THIS DRAWING IS PROPRIETARY AND SHALL NOT BE COPIED OR ITS CONTENTS DISCLOSED TO OUTSIDE PARTIES WITHOUT THE WRITTEN CONSENT OF THE TRANE COMPANY

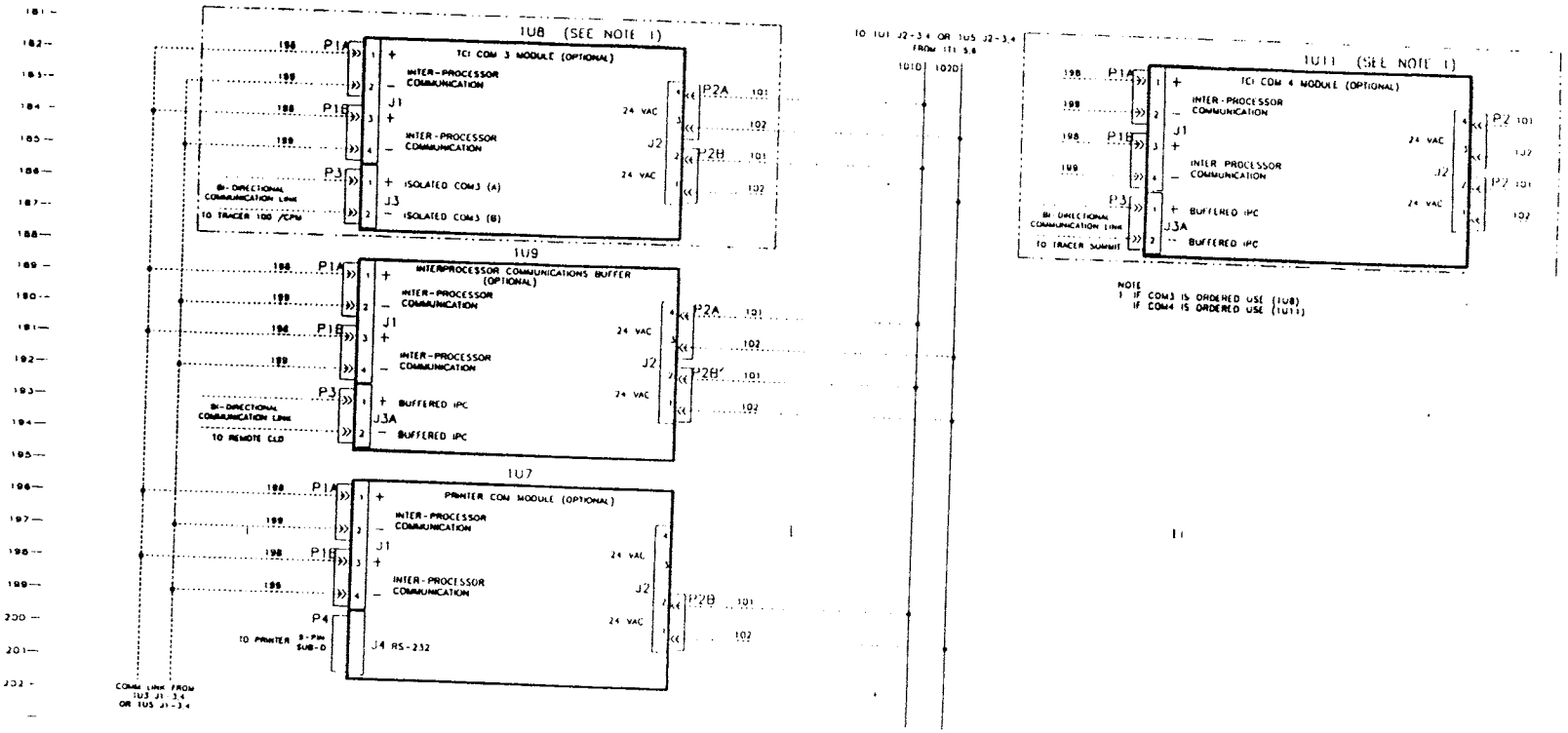

Figure 12 - (Continued) UCP2 Schematic Wiring Diagram for Chiller, Tracer Comm, Printer, and IPCB

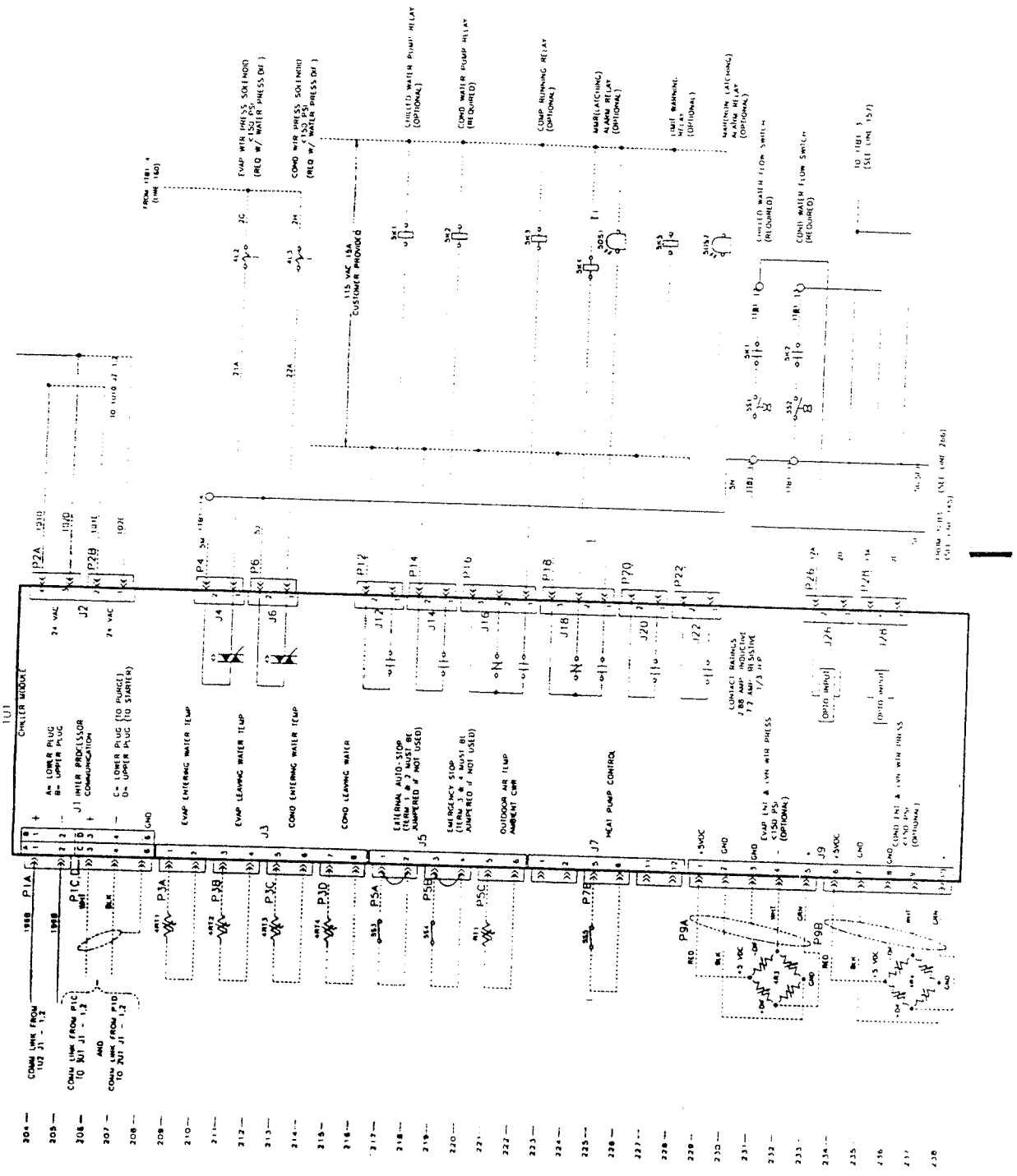

Figure 13 - UCP2 Schematic Wiring for IO and Option Modules

⚠ WARNING

HAZARDOUS VOLTAGE!

DISCONNECT ALL ELECTRIC POWER INCLUDING REMOTE DISCONNECTS BEFORE SERVICING

FAILURE TO DISCONNECT POWER BEFORE SERVICING CAN CAUSE SEVERE PERSONAL INJURY OR DEATH.

⚠ AVERTISSEMENT

VOLTAGE HASARDEUX!

DECONNECTEZ TOUTES LES SOURCES ELECTRIQUES INCLUANT LES DISJONCTEURS SITUES A DISTANCE AVANT D'EFFECTUER L'ENTRETIEN

FAUTE DE DECONNECTER LA SOURCE ELECTRIQUE AVANT D'EFFECTUER L'ENTRETIEN PEUT ENTRAINER DES BLESSURES CORPORELLES SEVERES OU LA MORT.

⚠ CAUTION

USE COPPER CONDUCTORS ONLY!

UNIT TERMINALS ARE NOT DESIGNED TO ACCEPT OTHER TYPES OF CONDUCTORS

FAILURE TO DO SO MAY CAUSE DAMAGE TO THE EQUIPMENT

THIS DRAWING IS PROPRIETARY AND SHALL NOT BE COPIED OR ITS CONTENTS DISCLOSED TO OUTSIDE PARTIES WITHOUT THE WRITTEN CONSENT OF THE TRANE COMPANY

NOTES

(1) IO MODULE IS USED FOR HGBP OPTION OR FOR THE PULSE OUTPUT REQUIRED WITH AN INDUCTION MOTOR VANE ACTUATOR. ITEMS ARE MUTUALLY EXCLUSIVE.

IF HGBP OPTION HAS BEEN ORDERED, IO MODULE SHIPS LOOSE. MOUNT MODULE IN PANEL AND WIRE AS SHOWN.

IF PULSE TYPE ACTUATOR WAS SPECIFIED, IO MODULE SHIPS LOOSE. FIELD WIRE THE INDUCTION MOTOR VANE ACTUATOR AND END SWITCH AS SHOWN FOR THE HGBP VALVE.

Factory Wiring

Field Wiring

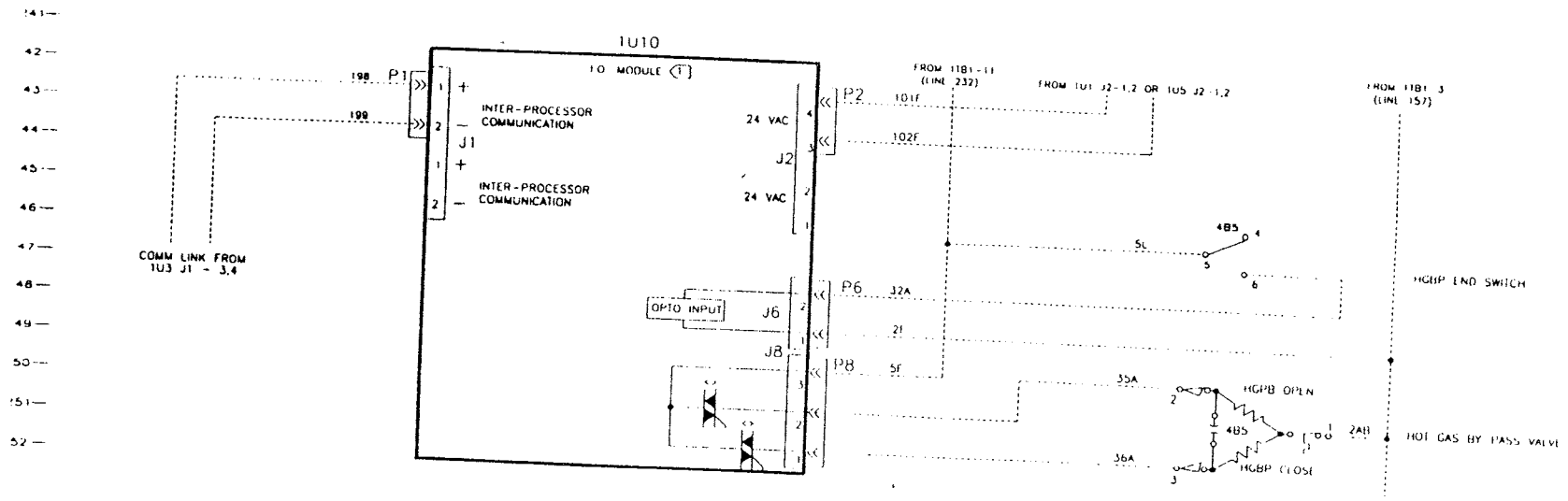

Figure 13 - (Continued) UCP2 Schematic Wiring for IO and Option Modules

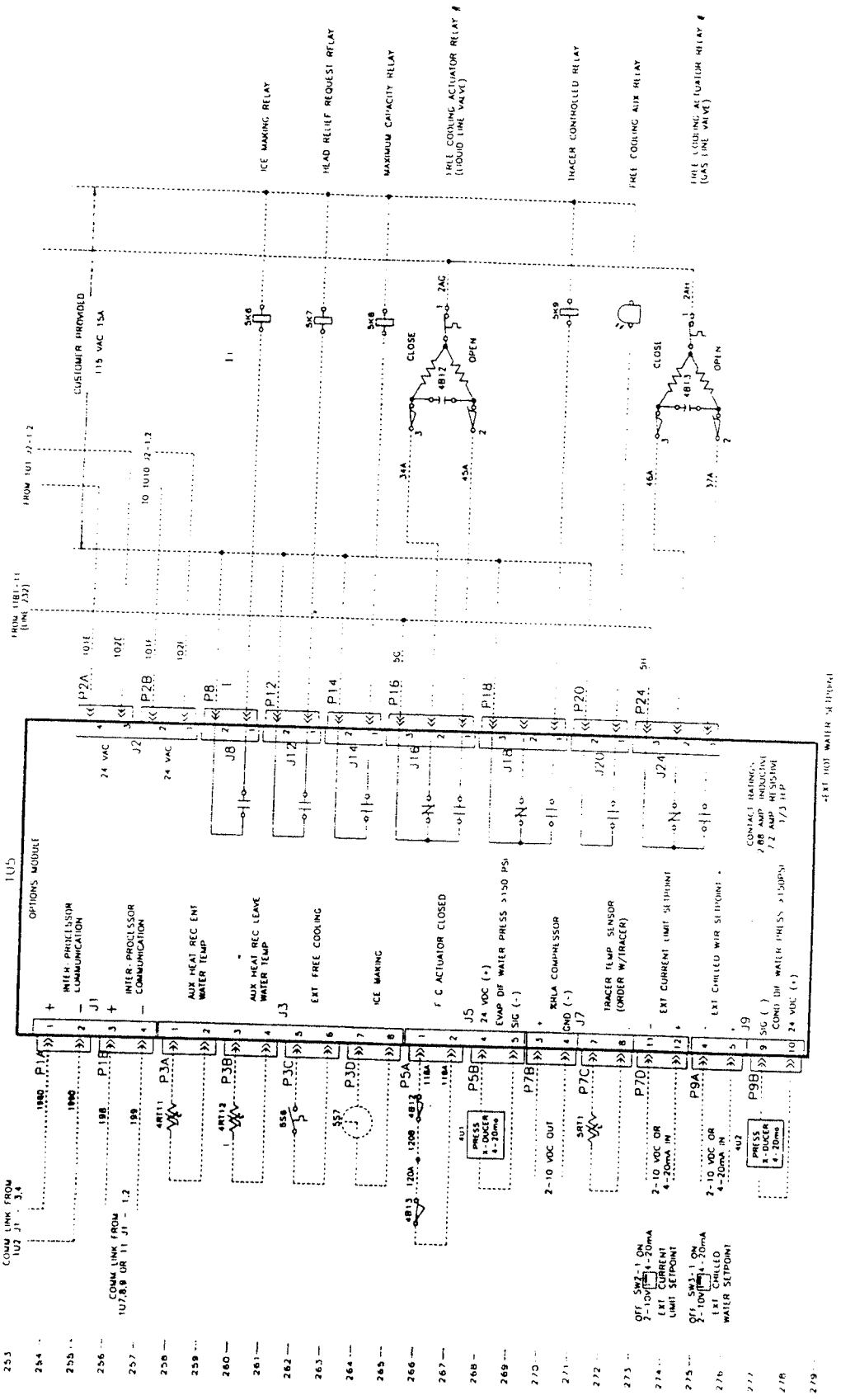

Oil Pump Control

If the existing oil pump contactor coil is:

- 115 VAC—connect the existing contactor coil between Terminals 1TB1-8 and 1TB1-4. See Figure 14a.
- not 115 VAC but can be converted—adapt the contactor coil for 115V applications and complete as above, shown in Figure 14a.
- not 115 VAC and can not be converted—wire the coil of a field- supplied "line-to-115V interface relay" between Terminals 1TB1-8 and 1TB1-4, as shown in Figure 14b.

Wire the normally open "interface relay" contacts in series with, and upstream of, th existing oil pump contactor coil. See Figure 14b.

Note: With all oil pump contactor voltage, connect an auxiliary set of "start" contactor (1M) contacts between UCP2 Terminals 1TB1-7 and 1TB1-8 to assure that the oil pump is on whenever the compressor is operating.

Figure 14 a - Electrical Interface for Existing Oil Pump Motor Contactor

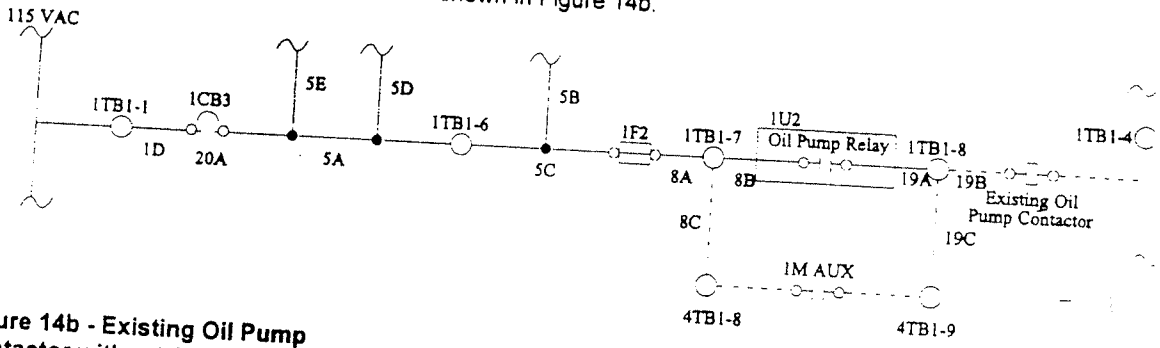

Figure 14b - Existing Oil Pump Contactor without 115V Coil

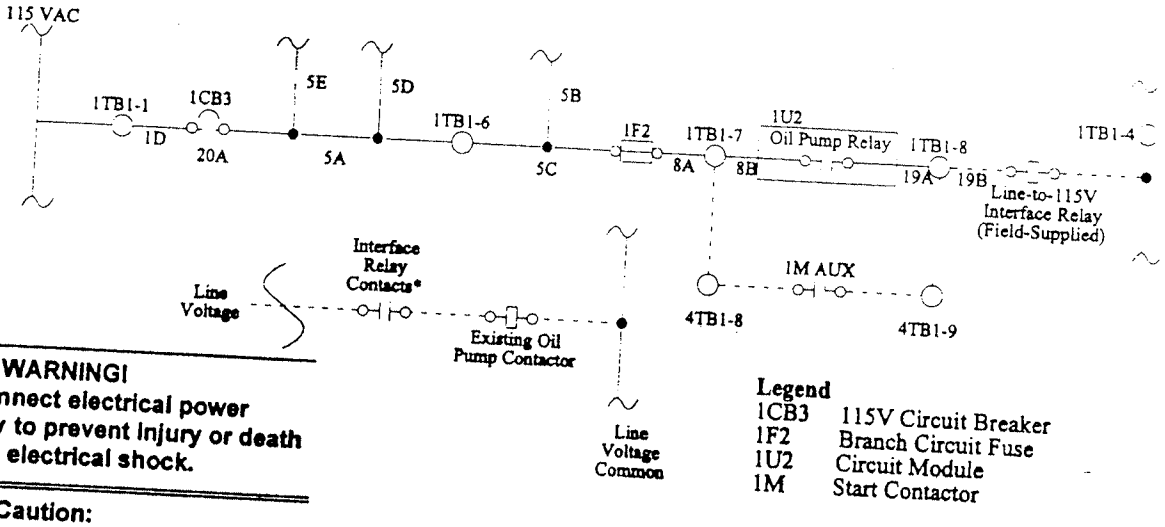

Legend

1CB3	115V Circuit Breaker
1F2	Branch Circuit Fuse
1U2	Circuit Module
1M	Start Contactor

⚠ WARNING!
Disconnect electrical power supply to prevent injury or death due to electrical shock.

⚠ Caution:
Use copper conductors only to prevent equipment damage (unless otherwise specified).

*When coil is not 115 volts, wire a set of normally-open contacts in a series with the existing oil pump motor contactor coil.

Note: The Oil Pump Relay coil is not shown, since closure of the Oil Pump Relay contacts is governed by Circuit Module (1U2) control logic.

Motor Temperature Interface

There are two motor temperature interface options:

- To convert a chiller with the Robertshaw module and RTD sensors, connect Circuit Module Terminals 1U2-J3-1,3,5 and 6 directly to the RTD terminals on the motor.

Note: These circuits are low voltage (i.e., less than 30 volts), and must be separated from higher voltage circuits.

⚠ Caution:
To prevent possible control malfunction due to electrical noise, never route low-voltage circuits with other conductors carrying 30V or more!

- If the chiller's motor temperature sensing device is a thermostat, connect it to an isolation relay and resistors (all field-supplied) that simulate the three RTD sensors presently used for motor temperature protection. The resistor in the common leg is brought into series with the other three resistors by CR-1. This causes an increased voltage drop which the UCP2 recognizes as a high temperature. See Figure 15.

Note: To assure proper operation, the thermostat's contacts must be normally closed and open on a rise in motor temperature.

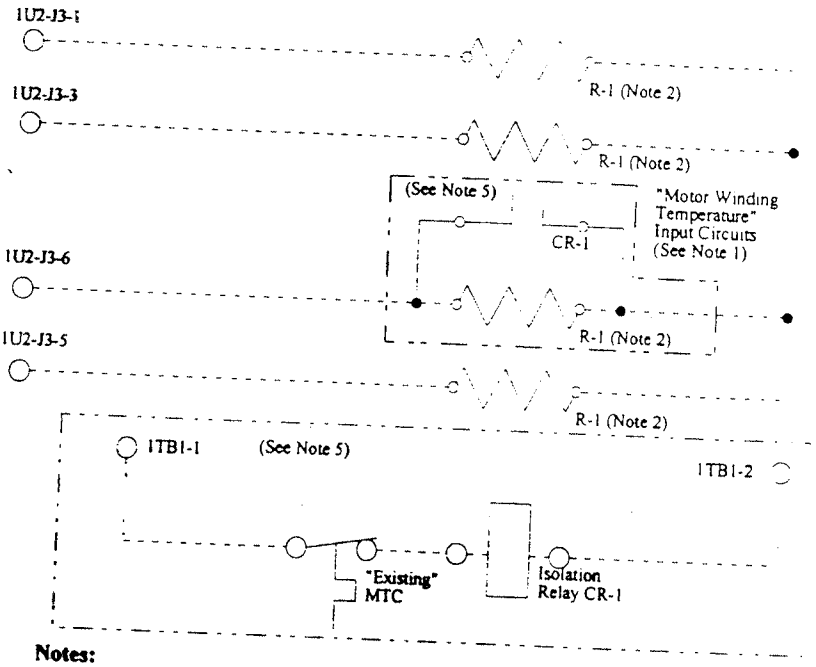

Figure 15 - Interfacing Existing Motor Temperature Thermostat w/UPC2 Control Panel (See Note 3)

⚠ WARNING!
Disconnect electrical power supply to prevent injury or death due to electrical shock.

⚠ Caution:
Use copper conductors only to prevent equipment damage (unless otherwise specified).

Notes:

1. Wiring to micro module 1U2's terminal strip is low voltage (i.e. less than 30 volts).
2. "R-1" resistors are of carbon composition, and are rated at 75 ohms/0.5 watt.
3. This electrical configuration must be used whenever the existing motor temperature control (MTC) is a thermostat. Notice that the thermostat must include normally-closed contacts that open on a rise in temperature.
4. The "CR-1" isolation relay and 4 "R-1" resistors must be field-supplied.
5. Required to simulate three RTD sensor motor protection.

Figure 16 -
Mounting Stepper Vane Actuator Motor

for PCV-2C thru -3J, and CVHA-022 thru -038

Top View

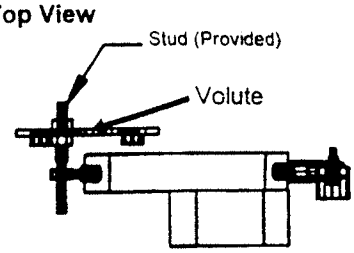

Note: Refer to check-out, for stroke adjustment required for all units.

Side View

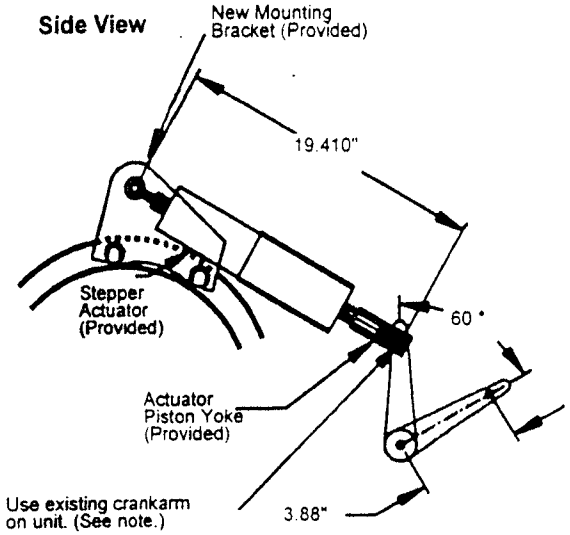

for CVHA-044 thru -055

Top View

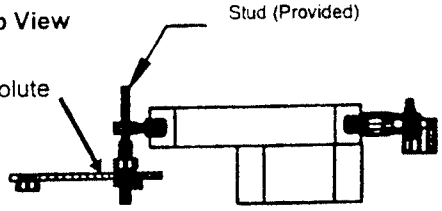

Notice that actuator is mounted on "outside" of volute.

Side View

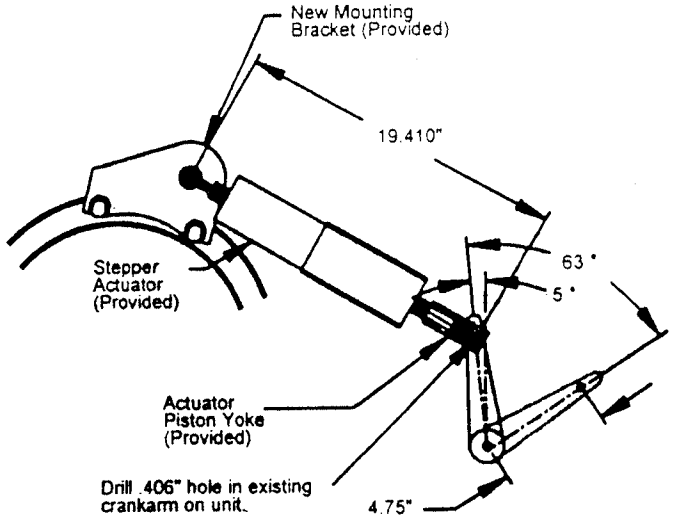

for PCV-4F thru -5D

Top View

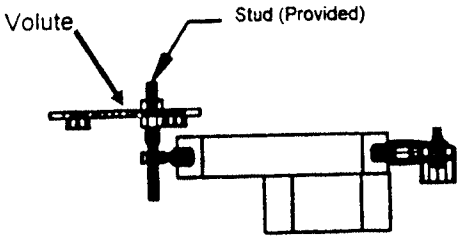

Stepper Inlet Guide Vane Actuator Installation

If installing a stepper inlet guide vane actuator, use the provided mounting brackets and the existing connecting hardware to mount the actuator.

Note: Do not connect the guide vanes at this time! Vane motor travel must be checked before the guide vanes are connected to the actuator; see "Post-Conversion UCP2 Panel/Chiller Check-out".

The vane motor leads and the Binary Position Indicator (BPI) must be wired to the UCP2 Panel, as shown in Figure 11, and connected to the Stepper Module (1U3).

The stepper actuator provided in the UCP2 conversion package is 1-3/8" longer, when fully retracted, than the pneumatic actuator used on "older" CenTraVacs®. Therefore, the existing linkage must be modified to ensure that the vanes are closed when the actuator is retracted.

Use the actuator mounting plate, piston yoke and mounting hardware provided to install the new electric actuator as shown in Figure 16.

The motor can be rotated 180° to accommodate existing hardware. Additional hardware may be field fabricated if necessary.

⚠ Caution:
When mounting the actuator, make sure that the 0° vane position corresponds with the actuator fully closed. Failure to do so could result in severe damage to the machine.

Note: When the new stepper actuator is installed on either PCV-2C through PCV-3J units, or CVHA-022 through CVHA-038 units, change the motor stroke from 5" to 4". (See Step 2 of "UCP2 Panel/Chiller Check-out" for instructions.) Also, the stroke of the actuator will be toward the compressor. Note the orientation shown in Figure 16.

Purge Control

The Purifier Purge™ model PRGC contains a Purge Module (3U1) that requires connection to the IPC and 115VAC. Refer to Figure 17a for connection diagrams. Older model Purifier Purges (PRGA and PRGB) as well as most competitor built purges require connections similar to Figure 17b. Trane PRGB terminal designations are used for convenience. If installing a non-Trane purge, refer to manufacturer's literature to determine connection points.

When using a PRGC, check that J1-5 and J1-6 on the Purge Module are not jumpered. The UCP2 controls the purge in this configuration.

Note: The purge type must be selected from the UCP2 menu screen in the field Start-up Service Setup Group Purge Control/Type. Only the PRGC Purifier Purge can communicate with the UCP2.

Figure 17a -
PRGC - Purifier Purge™

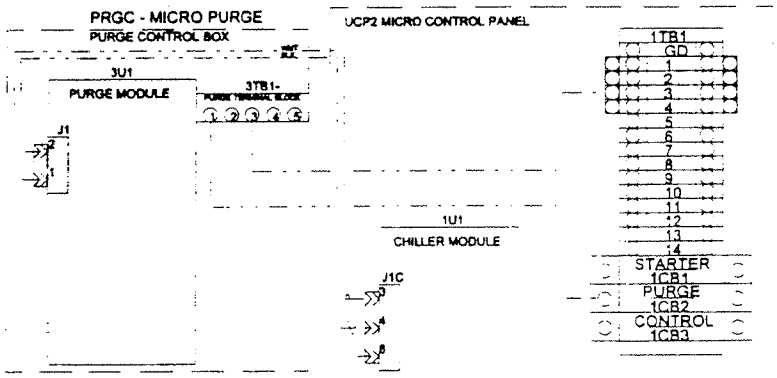

Figure 17b -
Models PRGA & PRGB - Purifier Purge™

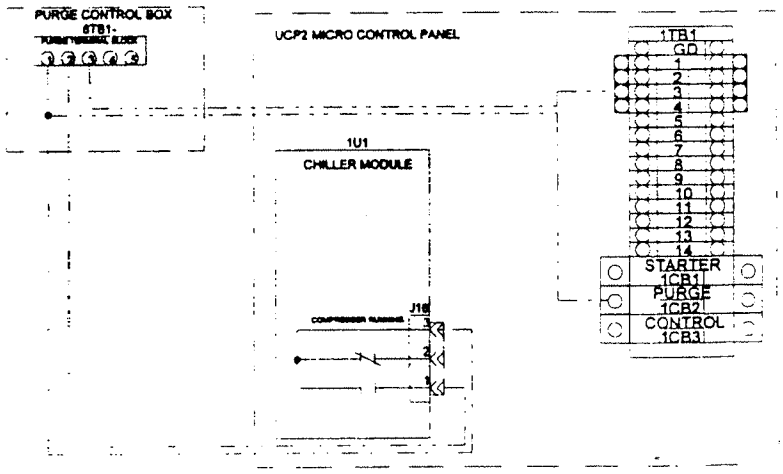

Starter Panel Conversion

Starter panel conversion varies with existing starter type and starter control voltage.

To ensure that the starter panel retrofit procedure is performed properly, carefully review the instructions in this section; and, if necessary, contact a Trane service organization for assistance before beginning the conversion process.

Important! Record a detailed description of all electrical changes made during the UCP2 starter retrofit process. Keep a copy of this report in the chiller record file for future reference.

Starter and Auxiliary Starter Panel Connections

The starter panel must be rewired as shown in the diagrams in Figures 20 and 21. The schematics in Figures 20 and 21 show typical wiring for Wye-Delta, Auto Transformer, Primary Reactor and Across-the-Line starters. Use Figures 20 and 21 and the starter manufacturer's drawings to determine the proper connection points in the starter.

It is important to determine proper connections to the start relay (5K1), transition relay (5K2), proof of transition (2M Aux) and condenser high pressure switch functions.

A start and transition relay is recommended for retrofit applications since it is not possible to predetermine control voltages.

Table 6 lists equivalent contactor designations for Trane supplied Wye-Delta starters. For other starter types and manufacturers, the function of each contactor must be determined and the equivalent Trane contactor identified **before** beginning the wiring.

Current Transformers (CT) must be installed at this time:

- See Table 7 for correct selection
- See Figure 20 for the two-stage CT arrangement for retrofit applications
- See Post Conversion Section for setup

Important! To maintain correct polarity, wire CT's exactly as shown in Figures 20 and 21.

The following connect to the Starter Module in the Auxiliary Starter Box, as shown in Figures 20 and 21:

- Inter-Processor Communication
- Line to auxiliary Current Transformers
- 24 VAC Power
- Transition Complete Signal (except for Across-the-Line)

See Potential Transformer Installation Section for information on optional transformers.

Table 6 -
Typical Wye-Delta Starter Designations

Control Type	Shorting Contactor	Transition Contactor	Start Contactor	Run Contactor	Pilot Relay	Transition Relay	Transition Complete
Generic	S	1A	1M	2M	1CR	1CR/T.C.	T.C.
AGM	K25	K26	K27	K28	K23 & K24	A1	K27 Aux
UCP1	2K3	2K4	2K1	2K2	2K5	K5	2K2 Aux
UCP2	2K3	2K4	2K1	2K2	5K1	5K2	2M Aux

Adaptive Frequency Drives for UCP2

The drive should be mounted according to the manufacturer's instructions. These instructions are detailed in Westinghouse Instruction Manual Part No. 9075A05 for the Accutrol 700. If this manual did not ship with the drive, contact ABU Technical Service. Follow all installation procedures for mounting and power wiring to the drive.

All control wiring field connections to the drive are made to the factory installed Starter Module inside the Adaptive Frequency Drive enclosure. See Figure 22 for non-bypass, Figures 23 and 24 for manual bypass, or Figures 25 and 26 for Solid State bypass.

With all bypass installations, the starter type on the UCP2 must be selected in the machine configuration menu as Adaptive Frequency Drive. Additional relays are used to transfer control from one starter module to the other by disconnecting the IPC, 24 VAC module power supply and 115VAC control power supply to the Starter Module not in use. The normally closed contacts on the Condenser High Pressure cutout are switched to the appropriate Starter Module.

On manual bypass, two additional relays are used. One transfers the Oil Pump Interlock from the existing Wye-Delta starter to the AFD. The other relay brings in the 1M and 2M power contactors configuring the starter in the three-lead Delta configuration.

Note: Check schematics that ship with the drive for unlabeled terminal designation for the bypass relay.

Table 7 - Current Transformer Selection
See Note Below

Line CT Part No.	Ext.	Line CT Ratio	CT Terminal Connections	No. of Primary Turns *	RLA Ranges	Meter Scale
X13580048	-01	150:5	X1 to X2	3	24.0 to 36.0	50
				2	36.0 to 54.0	75
(2-1/2" Dia. Hole)				1	72.0 to 108.0	150
		180:5	X1 to X3	3	28.8 to 43.2	60
				2	43.2 to 64.8	90
				1	86.4 to 129.6	180
		200:5	X1 to X4	2	48.0 to 72.0	100
				1	96.0 to 144.0	200
	-02	125:5	X1 to X2	2	60.0 to 90.0	125
		250:5		1	120.0 to 180.0	250
		300:5	X1 to X3	1	144.0 to 216.0	300
		350:5	X1 to X4	1	168.0 to 252.0	350
	-03	400:5	X1 to X2	1	192.0 t0 288.0	400
		500:5	X1 to X3	1	240.0 to 360.0	500
		600:5	X1 to X4	1	288.0 to 432.0	600
	-04	700:5	X1 to X2	1	336.0 to 504.0	700
		800:5	X1 to X3	1	384.0 to 576.0	800
		1000:5	X1 to X4	1	480.0 to 720.0	1000
	-05	1200:5	X1 to X2	1	576.0 to 864.0	1200
		1500:5	X1 to X3	1	720.0 to 1080.0	1500
X13580047	-01	1800:5	X1 to X2	1	864.0 to 1296.0	1800
		2100:5	X1 to X3	1	1008.0 to 1512.0	2100
(4" Dia. Hole)		2500:5	X1 to X4	1	1200.0 to 1800.0	2500
	-02	1000:5	X1 to X2	1	480.0 to 720.0	1000
		1200:5	X1 to X3	1	576.0 to 864.0	1200
		1500:5	X1 to X4	1	720.0 to 1080.0	1500

Note: See Post-Conversion Check-Out, Step 4.
* See Figure 18 for examples.

Figure 18 - Example of One and Two Turns

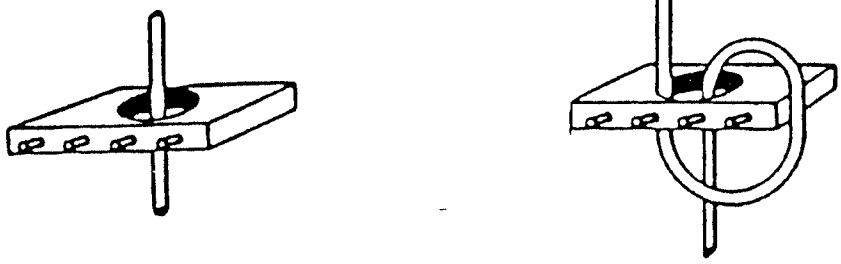

⚠ WARNING!
Disconnect electrical power supply to prevent injury or death due to electrical shock.

⚠ Caution:
Use copper conductors only to prevent equipment damage (unless otherwise specified).

Potential Transformer Installation for 3 Phase Voltage Monitoring (Optional)

The potential transformers (PT's) are used to measure line voltage:

- Less than 600 VAC line— a single PT per phase is used to step the signal down to a proportional 30 VAC for input into the starter module (2U1).
- Greater than 600 VAC line—a large PT is used to step from line to 120 VAC and a smaller PT steps the voltage to 30 VAC. The large PT is a three phase type except for the 6600 VAC/50 Hz where three single phase PT's are used.

a. <600 Volt (Digit 9 = 1) -
The black leads are connected to the line from Phase A-B, B-C and C-A. The green ground wire is connected to chassis ground. Field provided wires connect the 2U1 Module to the spade terminals on the P.T.'s. See Figures 20 and 21.

b. >600 Volt (Digit 9 = 2) -
The line-to-120 VAC transformer's secondaries are connected to the primary (black) leads of the provided transformer. If the line-to-120 P.T. is a three phase type, the Phase A-B, B-C and C-A connections must be made similar to Figures 20 and 21. If the line-to-120 VAC P.T. is a single phase type, ensure that the proper phasing is maintained similar to Figure 19. The green wire is connected to ground and the white wires to the 2U1 module.

c. 2300/2400 VAC, 4200 VAC, or 3300 VAC/50 Hz P.T.'s (Digit 9 = 3, 4 or 5) -
The primaries (A, B and C) of the three phase P.T. are connected to the >600 volt 120:30 P.T. as described above.

d. 6600 VAC/50 Hz P.T.'s -
The H1-H2 terminals of the single phase P.T.'s are connected to phases A-B, B-C and C-A respectively. The secondaries connect to the >600 volt generic P.T.'s primaries directly. See Figure 19.

Note: The <600 volt transformer as well as the 120:30 VAC potential transformer may be mounted in the auxiliary starter box.

Use Table 8 for fusing information for 5F1, 5F2 and 5F3.

⚠ DANGER!
Do NOT connect the primary (black leads) of the 120:30 VAC Potential Transformer to line. Doing so could cause an explosion resulting in severe injury or death.

⚠ Caution:
Do NOT connect the secondaries of the line-to-120 VAC potential transformer to the UCP2 starter module. Doing so will cause damage to the module.

Figure 19 -
Potential Transformer Installation
6600 VAC/50 Hz

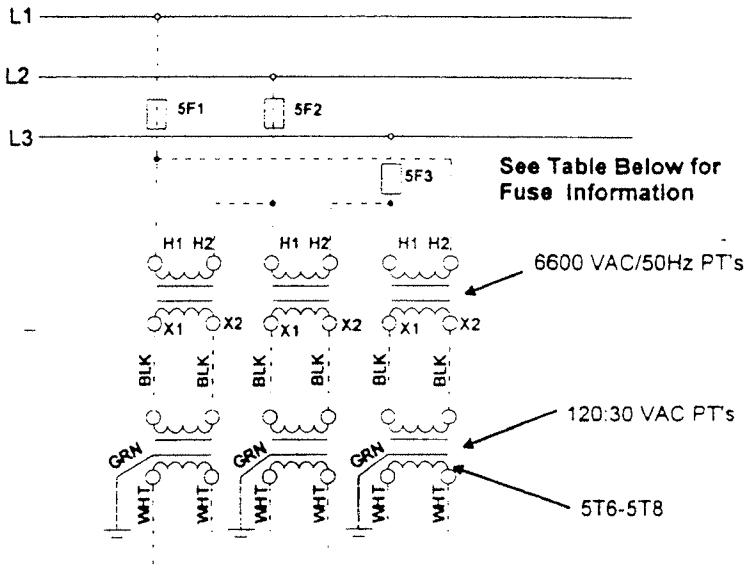

Table 8 -
Fusing for 5F1, 5F2 and 5F3

Voltage (V)	Fuse (A)	Voltage (V)	Fuse (A)
200	25	600	8
208	20	2400	3
230	17.5	4200	3
380	15	3300 *	5
460	10	6600 *	1
575	8		

* 50 Hz

Figure 20 -
Typical Wye-Delta Starter

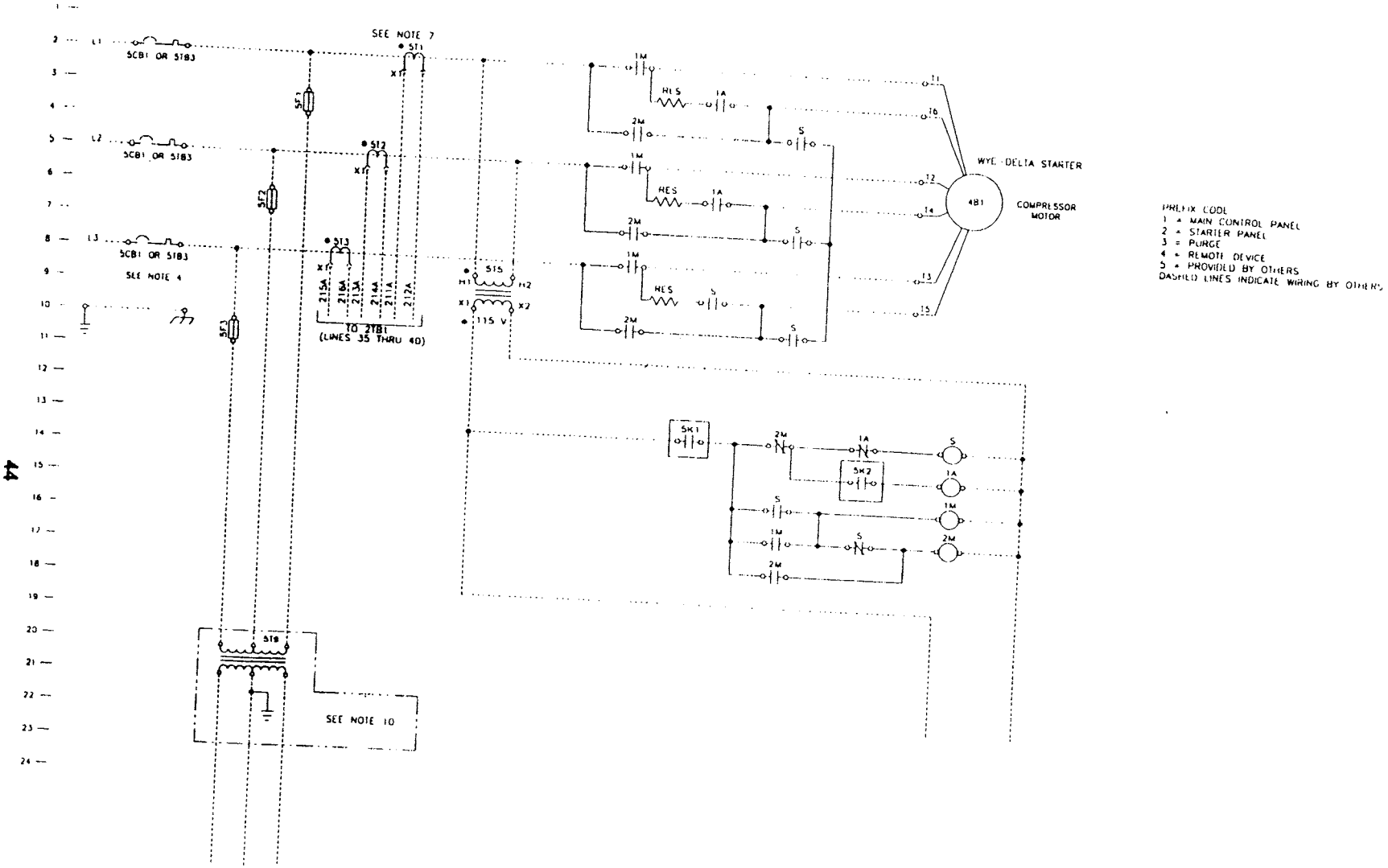

Note: Refer to Table 8 for fuse selection of 5F1-F3.

Figure 20 - (Continued)
Typical Wye-Delta Starter

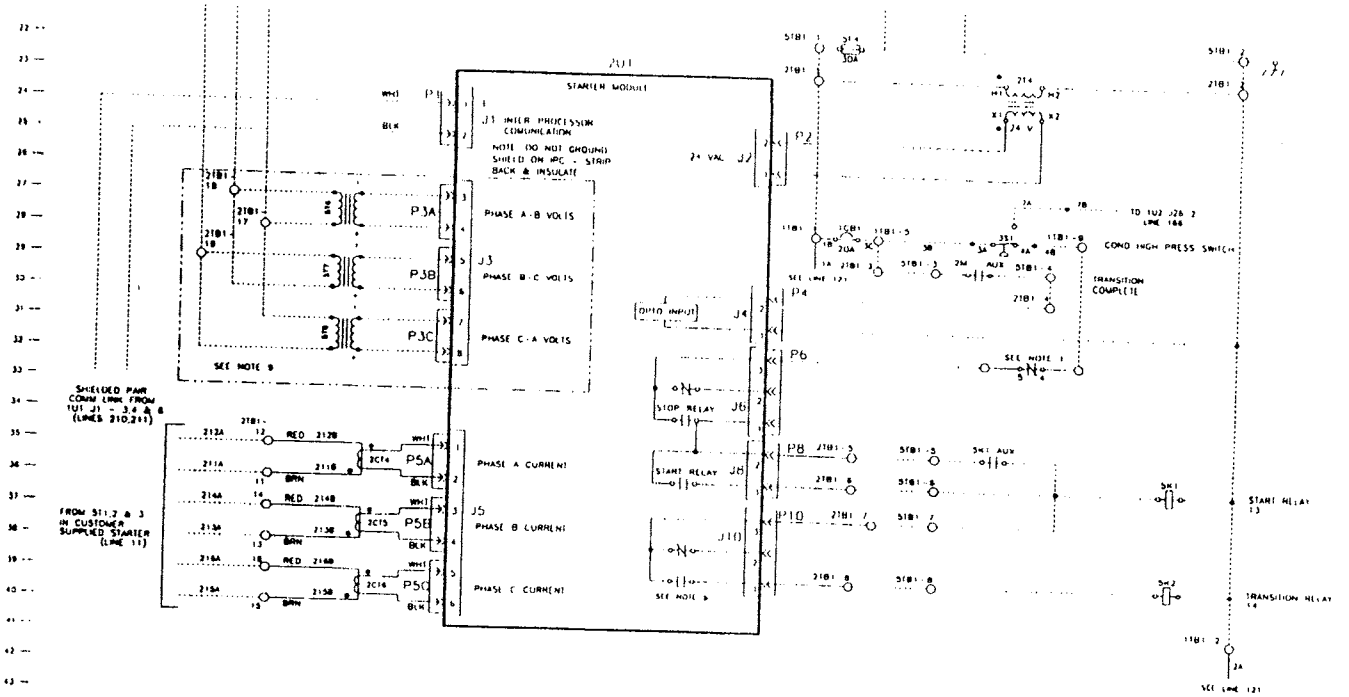

NOTES
1 OPTIONAL STARTER INTERLOCK SEE STARTER MANUFACTURERS WIRING DIAGRAM FOR SPECIFIC APPLICATION
2 UNLESS OTHERWISE NOTED ALL SWITCHES ARE SHOWN AT 25 C (77 F), AT ATMOSPHERIC PRESSURE, AT 50% RELATIVE HUMIDITY WITH ALL UTILITIES TURNED OFF AND AFTER A NORMAL SHUTDOWN HAS OCCURED
3 NUMBERS ALONG THE RIGHT SIDE OF THE SCHEMATIC DESIGNATE THE LOCATION OF THE CONTACTS BY LINE NUMBER AN UNDERLINED NUMBER INDICATES A NORMALLY CLOSED CONTACT
4 THREE PHASE POWER SUPPLY VOLTAGE SEE UNIT NAMEPLATE
5 REMOTE WYE-DELTA STARTER WIRING BETWEEN STARTER AND CONTROL MODULE ARE SHOWN SEE STARTER MANUFACTURERS WIRING DIAGRAM FOR SPECIFIC STARTER WIRING
6 RELAY COILS ARE NOT SHOWN CONTACTS ARE CONTROLLED BY THE LOGIC OF THE MICRO-CONTROLLER SEE SEQUENCE OF OPERATION
7 POLARITY MARKING ON THE CURRENT TRANSFORMER (HI MARKING ON CT) MUST BE FACING TOWARDS THE INCOMING CURRENT
8 FOR REMOTE Y-D STARTERS RATED GREATER THAN 935 AMA SEE STARTER MANUFACTURERS WIRING DIAGRAM FOR SPECIFIC CURRENT TRANSFORMER WIRING

9 >600 120 30VAC PTS
<600 LINE TO 30VAC PTS
10 >600 120 30VAC PTS
EXCEPT FOR 6600VAC 50HZ SEE INSTALLATION MANUAL

⚠ WARNING
HAZARDOUS VOLTAGE!
DISCONNECT ALL ELECTRIC POWER INCLUDING REMOTE DISCONNECTS BEFORE SERVICING
FAILURE TO DISCONNECT POWER BEFORE SERVICING CAN CAUSE SEVERE PERSONAL INJURY OR DEATH.

⚠ AVERTISSEMENT
VOLTAGE HASARDEUX!
DECONNECTEZ TOUTES LES SOURCES ELECTRIQUES INCLUANT LES DISJONCTEURS SITUES A DISTANCE AVANT D'EFFECTUER L'ENTRETIEN
FAUTE DE DECONNECTER LA SOURCE ELECTRIQUE AVANT D'EFFECTUER L'ENTRETIEN PEUT ENTRAINER DES BLESSURES CORPORELLES SEVERES OU LA MORT

⚠ CAUTION
USE COPPER CONDUCTORS ONLY!
UNIT TERMINALS ARE NOT DESIGNED TO ACCEPT OTHER TYPES OF CONDUCTORS.
FAILURE TO DO SO MAY CAUSE DAMAGE TO THE EQUIPMENT.

THIS DRAWING IS PROPRIETARY AND SHALL NOT BE COPIED OR ITS CONTENTS DISCLOSED TO OTHER PARTIES WITHOUT THE WRITTEN CONSENT OF THE TRANE COMPANY

Figure 21 -
Typical Across the Line Starter, Auto Transformer Starter and Primary Reactor Starter

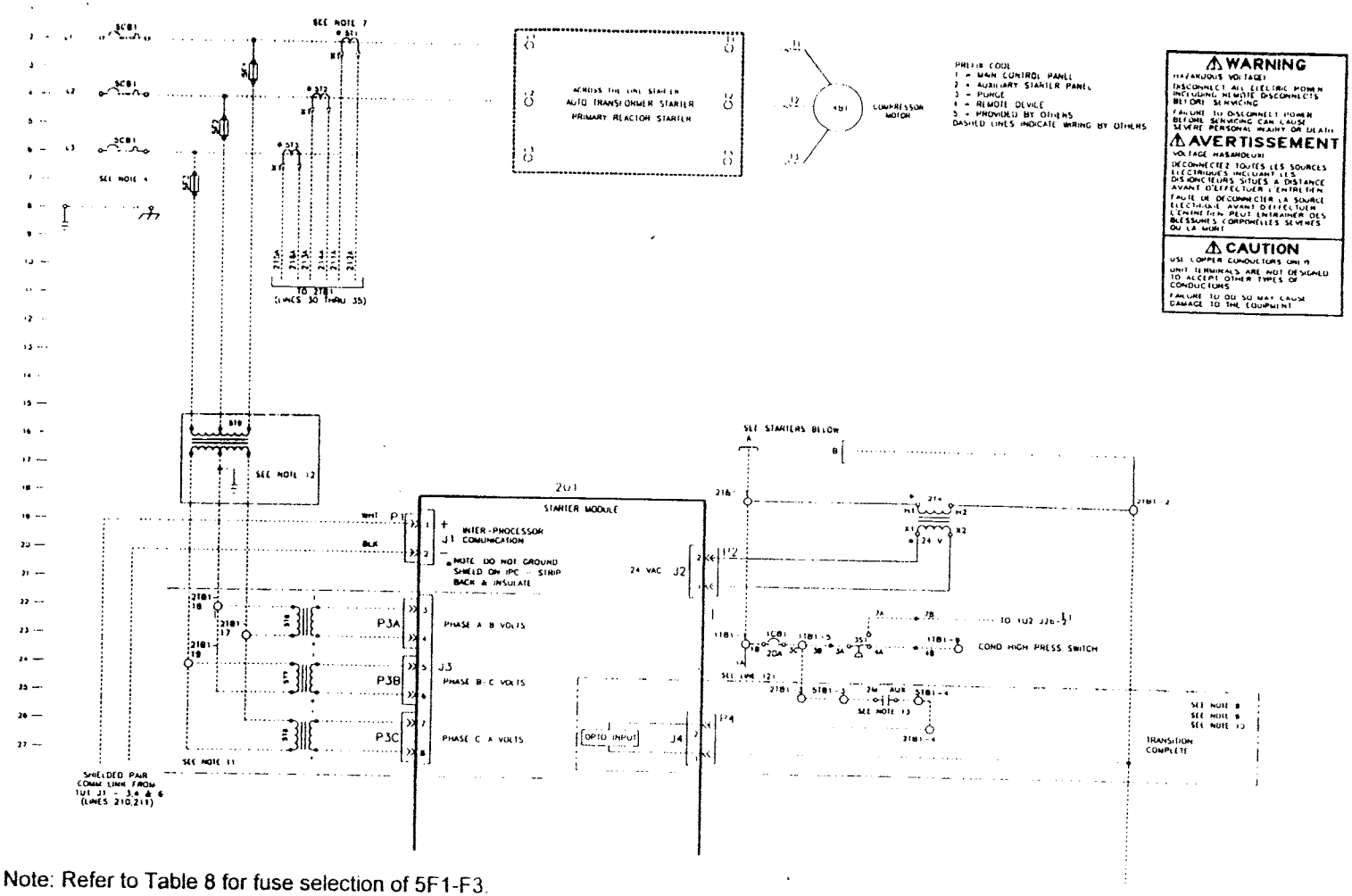

Note: Refer to Table 8 for fuse selection of 5F1-F3.

Figure 21 - (Continued)
Typical Across the Line Starter, Auto Transformer Starter and Primary Reactor Starter

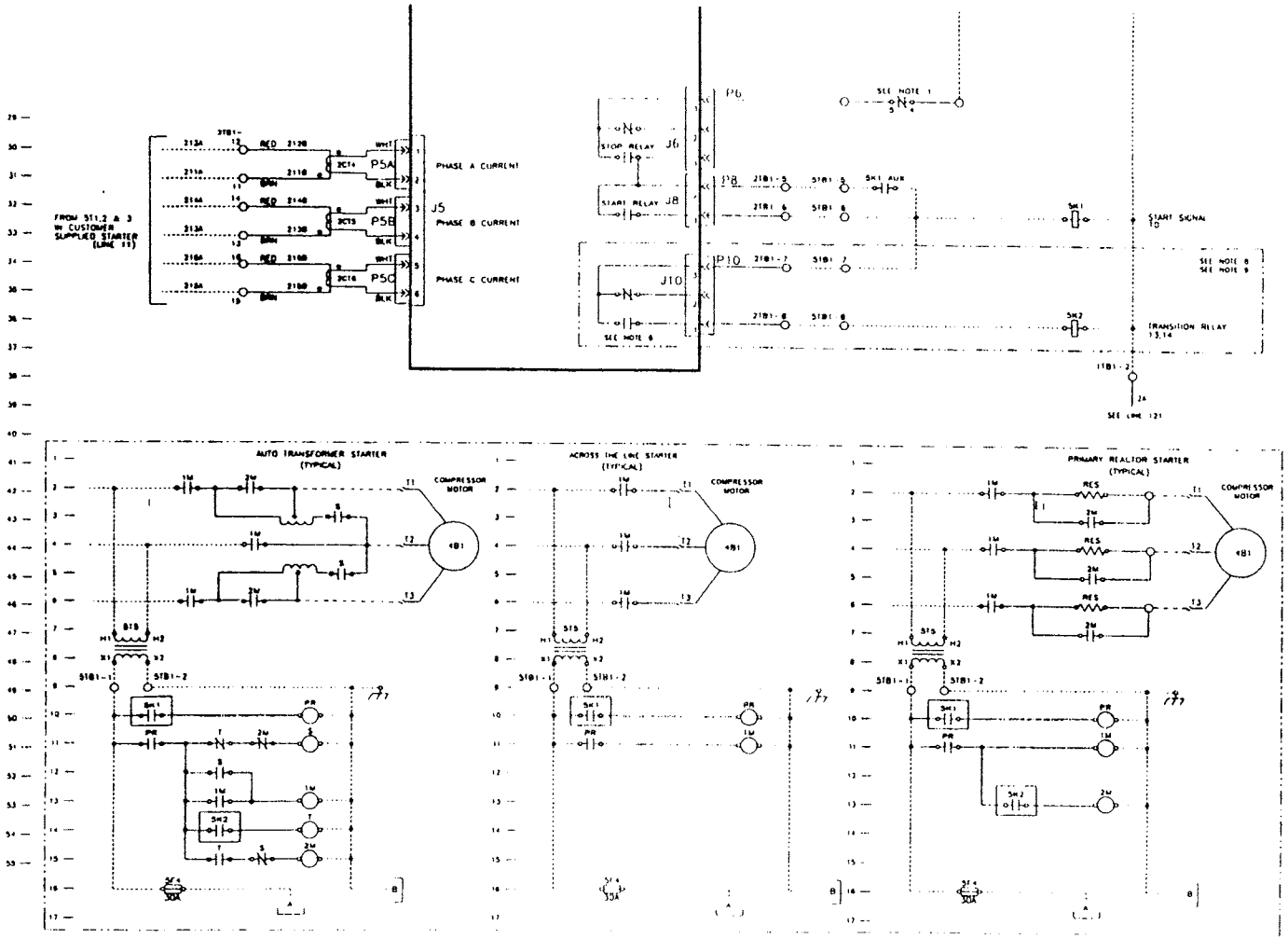

NOTES
1 OPTIONAL STARTER INTERLOCK SEE STARTER MANUFACTURERS WIRING DIAGRAM FOR SPECIFIC APPLICATION
2 UNLESS OTHERWISE NOTED ALL SWITCHES ARE SHOWN AT 25 C (77 F) AT ATMOSPHERIC PRESSURE AT SEA RELATIVE HUMIDITY WITH ALL UTILITIES TURNED OFF AND AFTER A NORMAL SHUTDOWN HAS OCCURED
3 NUMBERS ALONG THE RIGHT SIDE OF THE SCHEMATIC DESIGNATE THE LOCATION OF THE CONTACTS BY LINE NUMBER AN UNDERLINED NUMBER INDICATES A NORMALLY CLOSED CONTACT
4 THREE PHASE POWER SUPPLY VOLTAGE SEE LINE NAMEPLATE
5 SEE STARTER MANUFACTURERS WIRING DIAGRAM FOR SPECIFIC STARTER WIRING
6 RELAY COILS ARE NOT SHOWN CONTACTS ARE CONTROLLED BY THE EDGE OF THE MICRO CONTROLLER SET SEQUENCE OF OPERATION
7 POLARITY MARKING ON THE CURRENT TRANSFORMER (H1 MARKING ON C3) MUST BE FACING TOWARDS THE INCOMING CURRENT
8 USED WITH CUSTOMER PRIMARY REACTOR STARTER
9 USED WITH AUTO TRANSFORMER STARTER
10 USED WITH ACROSS THE LINE STARTER
11 >600 120 30VAC PTS
<600 LINE TO 30VAC PTS
12 >600 120-30VAC PTS
EXCEPT FOR 600VAC 50HZ SEE INSTALLATION MANUAL
13 ON ACROSS THE LINE 2M IS 1M

THIS DRAWING IS CONFIDENTIAL AND SHALL NOT BE COPIED OR ITS CONTENTS DISCLOSED TO OTHERS WITHOUT THE WRITTEN CONSENT OF THE TRANE COMPANY

Figure 22 -
Remote Adaptive Frequency Drive

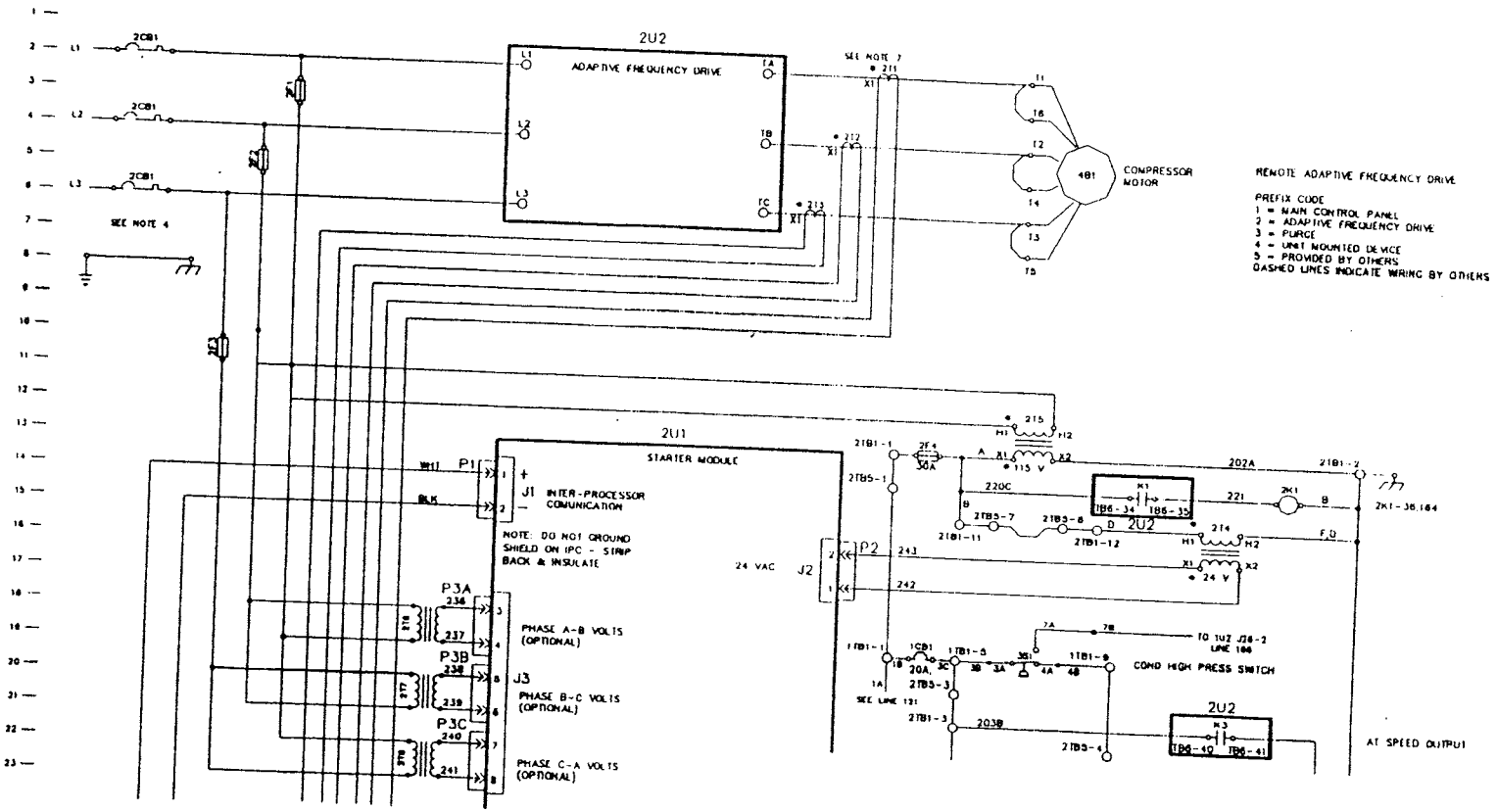

Figure 22 - (Continued)
Remote Adaptive Frequency Drive

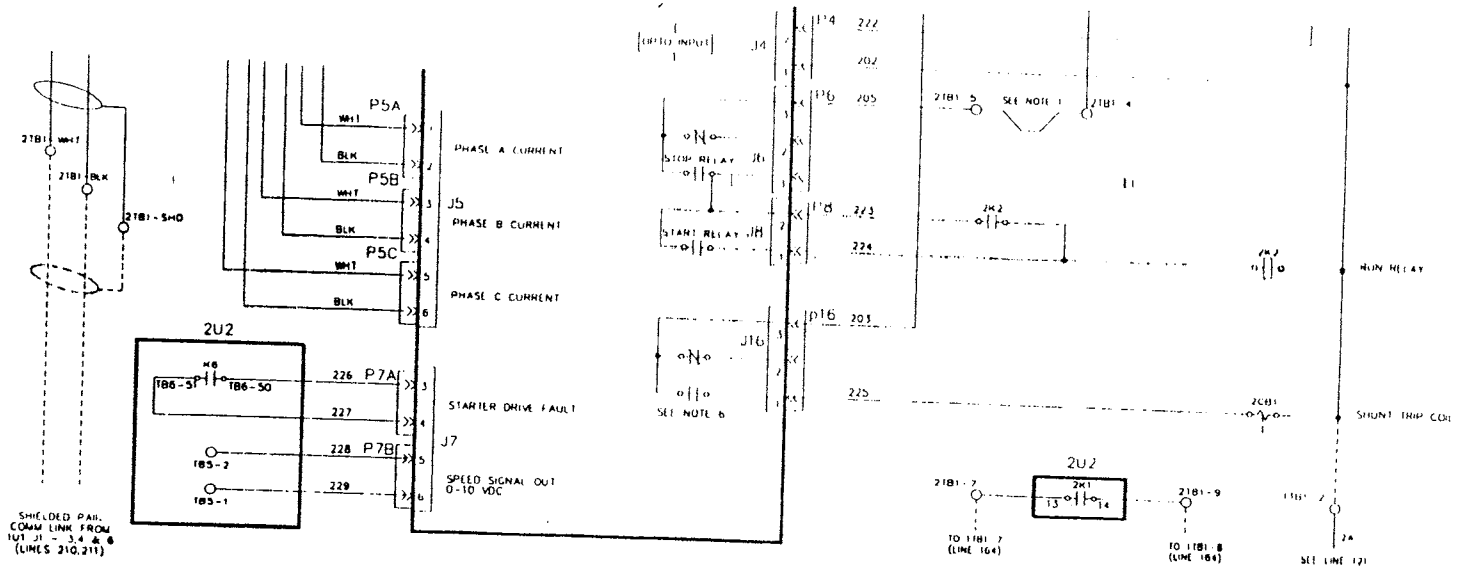

NOTES
1. OPTIONAL ADAPTIVE FREQUENCY DRIVE (AFD) INTERLOCK SEE AFD MANUFACTURES WIRING DIAGRAM FOR SPECIFIC APPLICATION
2. UNLESS OTHERWISE NOTED, ALL SWITCHES ARE SHOWN AT 25 C (77 F), AT ATMOSPHERIC PRESSURE, AT 50% RELATIVE HUMIDITY WITH ALL UTILITIES TURNED OFF AND AFTER A NORMAL SHUTDOWN HAS OCCURED
3. NUMBERS ALONG THE RIGHT SIDE OF THE SCHEMATIC DESIGNATE THE LOCATION OF THE CONTACTS BY LINE NUMBER. AN UNDERLINED NUMBER INDICATES A NORMALLY CLOSED CONTACT
4. THREE PHASE POWER SUPPLY VOLTAGE SEE UNIT NAMEPLATE
5. REMOTE AFD WIRING BETWEEN AFD AND CONTROL MODULE ARE SHOWN. SEE AFD MANUFACTURES WIRING DIAGRAM FOR SPECIFIC AFD WIRING.
6. RELAY COILS ARE NOT SHOWN. CONTACTS ARE CONTROLLED BY THE LOGIC OF THE MICRO-CONTROLLER. SEE SEQUENCE OF OPERATION
7. POLARITY MARKING ON THE CURRENT TRANSFORMER (H1 MARKING ON CT) MUST BE FACING TOWARDS THE INCOMING CURRENT

THIS DRAWING IS PROPRIETARY AND SHALL NOT BE COPIED OR ITS CONTENTS DISCLOSED TO OUTSIDE PARTIES WITHOUT THE WRITTEN CONSENT OF THE TRANE COMPANY

Note: Drawings
Not Yet
Released

Figure 23 -
Adaptive Frequency Drive with Manual Bypass —
AFD Starter Module

Note: Drawings
Not Yet
Released

Figure 23 - (Continued)
Adaptive Frequency Drive with Manual Bypass —
AFD Starter Module

Note: Drawings
Not Yet
Released

Figure 24 -
Adaptive Frequency Drive with Manual Bypass —
Wye-Delta Starter Module

Note: Drawings
Not Yet
Released

Figure 24 - (Continued)
Adaptive Frequency Drive with Manual Bypass —
Wye-Delta Starter Module

Figure 25 -
Adaptive Frequency Drive with Solid State Bypass

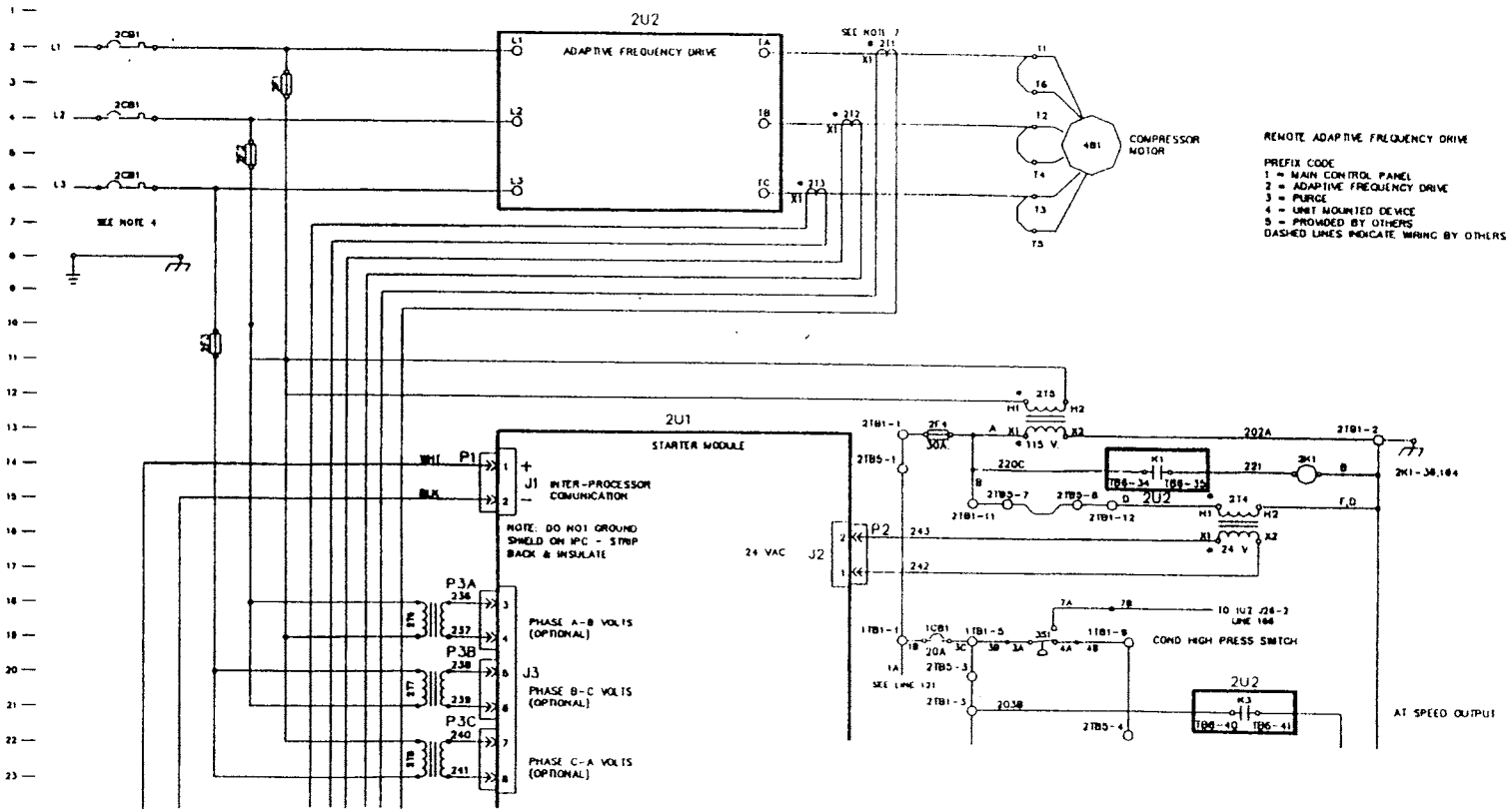

Figure 25 - (Continued)
Adaptive Frequency Drive with Solid State Bypass

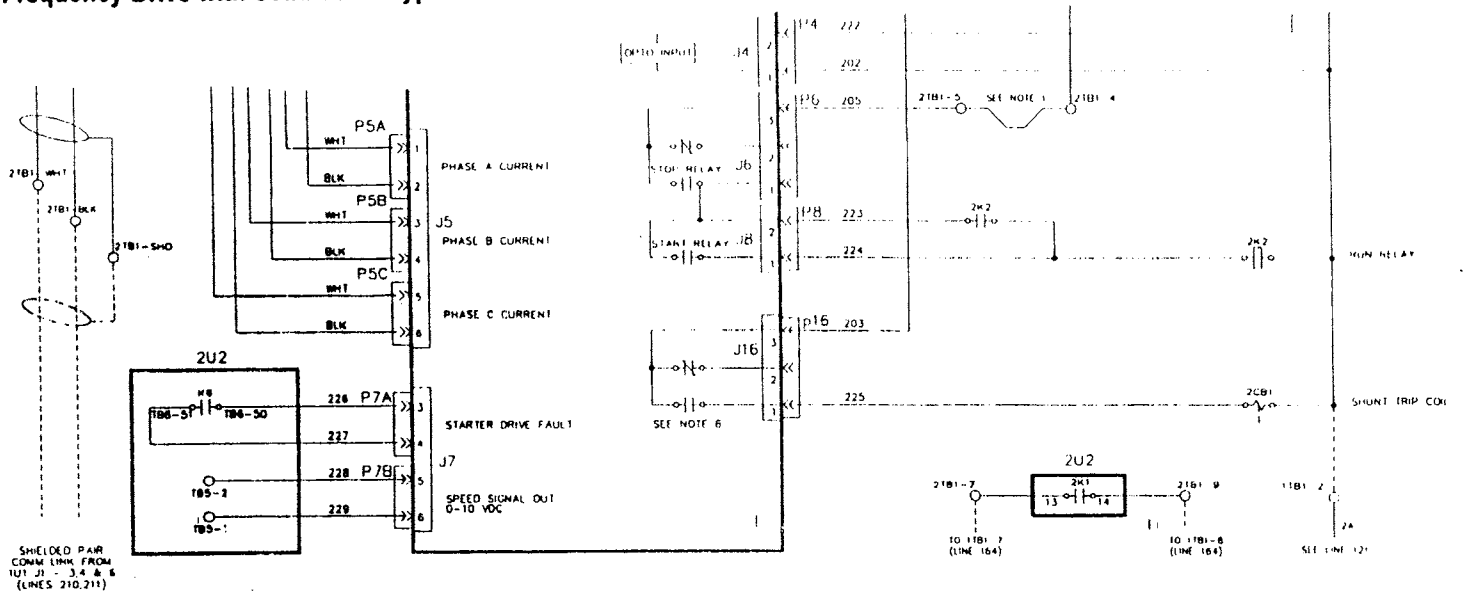

NOTES:
1. OPTIONAL ADAPTIVE FREQUENCY DRIVE (AFD) INTERLOCK. SEE AFD MANUFACTURER'S WIRING DIAGRAM FOR SPECIFIC APPLICATION.
2. UNLESS OTHERWISE NOTED ALL SWITCHES ARE SHOWN AT 25°C (77°F), AT ATMOSPHERIC PRESSURE, AT 50% RELATIVE HUMIDITY WITH ALL UTILITIES TURNED OFF AND AFTER A NORMAL SHUTDOWN HAS OCCURED.
3. NUMBERS ALONG THE RIGHT SIDE OF THE SCHEMATIC, DESIGNATE THE LOCATION OF THE CONTACTS BY LINE NUMBER. AN UNDERLINED NUMBER INDICATES A NORMALLY CLOSED CONTACT.
4. THREE PHASE POWER SUPPLY VOLTAGE. SEE UNIT NAMEPLATE.
5. REMOTE AFD WIRING BETWEEN AFD AND CONTROL MODULE ARE SHOWN. SEE AFD MANUFACTURER'S WIRING DIAGRAM FOR SPECIFIC AFD WIRING.
6. RELAY COILS ARE NOT SHOWN. CONTACTS ARE CONTROLLED BY THE LOGIC OF THE MICRO-CONTROLLER. SEE SEQUENCE OF OPERATION.
7. POLARITY MARKING ON THE CURRENT TRANSFORMER (H1 MARKING ON CT) MUST BE FACING TOWARDS THE INCOMING CURRENT.

THIS DRAWING IS PROPRIETARY AND SHALL NOT BE COPIED OR ITS CONTENTS DISCLOSED TO OUTSIDE PARTIES WITHOUT THE WRITTEN CONSENT OF THE TRANE COMPANY.

Figure 26 -
Adaptive Frequency Drive with Solid State Bypass

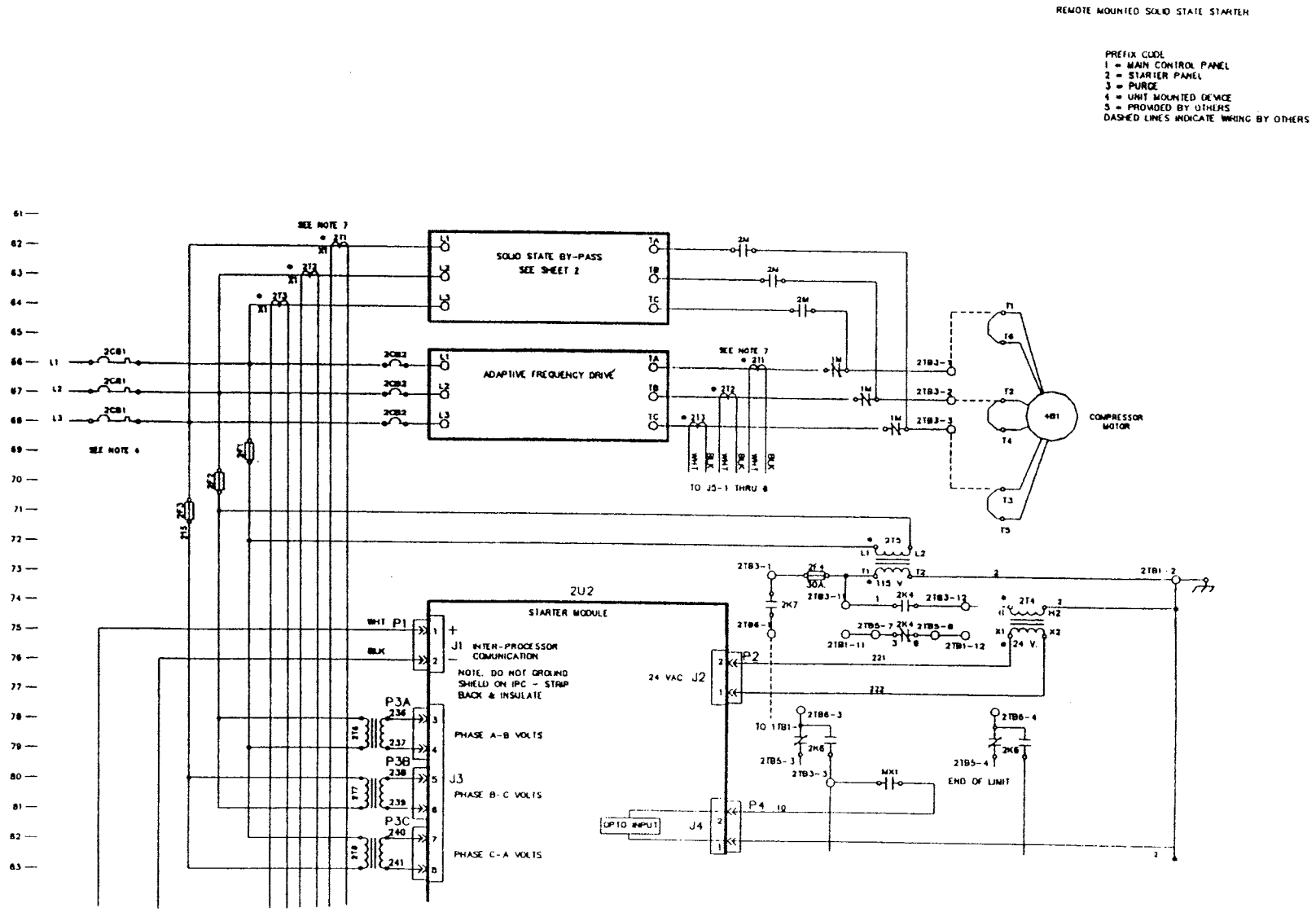

Figure 26 - (Continued)
Adaptive Frequency Drive with Solid State Bypass

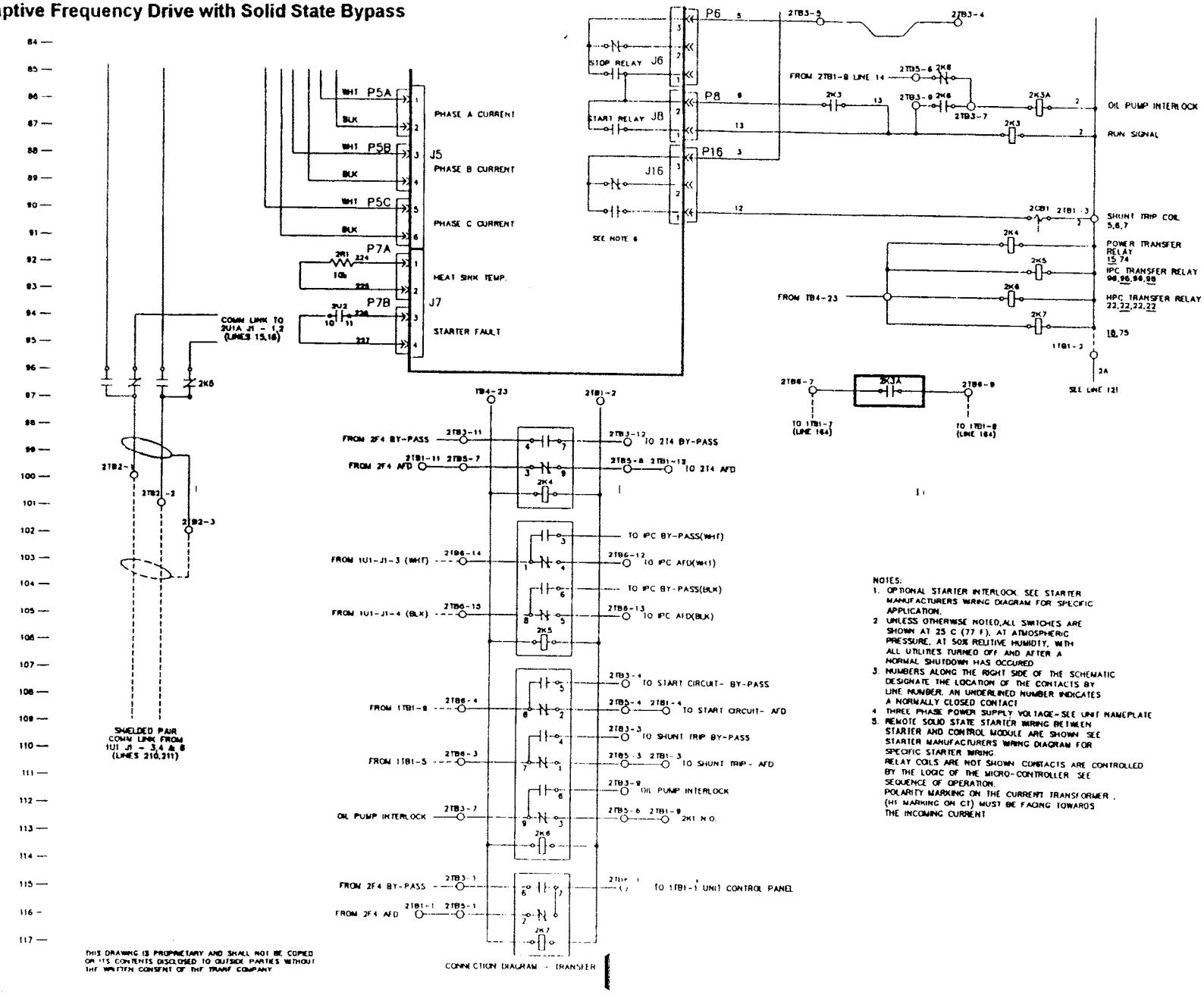

NOTES:
1. OPTIONAL STARTER INTERLOCK. SEE STARTER MANUFACTURERS WIRING DIAGRAM FOR SPECIFIC APPLICATION.
2. UNLESS OTHERWISE NOTED, ALL SWITCHES ARE SHOWN AT 25 C (77 F), AT ATMOSPHERIC PRESSURE, AT 50% RELITIVE HUMIDITY, WITH ALL UTILITIES TURNED OFF AND AFTER A NORMAL SHUTDOWN HAS OCCURED.
3. NUMBERS ALONG THE RIGHT SIDE OF THE SCHEMATIC DESIGNATE THE LOCATION OF THE CONTACTS BY LINE NUMBER. AN UNDERLINED NUMBER INDICATES A NORMALLY CLOSED CONTACT.
4. THREE PHASE POWER SUPPLY VOLTAGE - SEE UNIT NAMEPLATE
5. REMOTE SOLID STATE STARTER WIRING BETWEEN STARTER AND CONTROL MODULE ARE SHOWN. SEE STARTER MANUFACTURERS WIRING DIAGRAM FOR SPECIFIC STARTER WIRING.
RELAY COILS ARE NOT SHOWN. CONTACTS ARE CONTROLLED BY THE LOGIC OF THE MICRO-CONTROLLER. SEE SEQUENCE OF OPERATION.
POLARITY MARKING ON THE CURRENT TRANSFORMER (HI MARKING ON CT) MUST BE FACING TOWARDS THE INCOMING CURRENT

THIS DRAWING IS PROPRIETARY AND SHALL NOT BE COPIED OR ITS CONTENTS DISCLOSED TO OUTSIDE PARTIES WITHOUT THE WRITTEN CONSENT OF THE TRANE COMPANY

Post-Conversion Check-out

⚠ Caution:
To prevent machine damage, contact a Trane service organization to perform the check-out procedures described in this section.

Starter Panel

All wiring in the starter must be re-checked and the contactor logic verified before starting the unit.

UCP2 Panel / Chiller

1. Verify all wiring is connected correctly and that all wires are numbered properly. Make sure all -piping is completed.
2. Perform the following steps only if a stepper inlet guide vane actuator has been installed.
   a. Check and adjust vane travel before connecting the actuator to the guide vanes. Power up the UCP2 and choose Inlet Guide Vane Output Type <Stepper Motor> from the Machine Configuration menu and Vane Control <Manual> from the Service Tests menu. Verify that the actuator operates from 0-100% (0-5" stroke) open.
   b. Connect the guide vane to the actuator.
   c. Connect the vane linkage to the actuator motor.
   d. In the Field Start-up Service Settings group, set the Inlet Guide Vane (IGV) Maximum Travel Setpoint to the previously measured stroke (in the Existing Control Panel Removal Section) X 11,000 steps (i.e., a 5" stroke equals 55,000 steps).
   e. In the Service Tests Group, change the vane control status to manual, go to the next menu and increase vane position slowly until the vanes are physically open 100%. If the vanes are not open, increase the IGV Maximum Travel Setpoint by 1,000 steps. Repeat this process as often as necessary. The vane position will not correspond to the percentage shown on the screen.

⚠ Caution:
The Inlet Guide Vane Actuator may go beyond the designed travel limits of the linkage. Failure to properly identify the fully open position can cause the actuator to over travel and break the vane linkage.

   f. When the vanes are fully open, press <Next> until the screen showing IGV actuator steps is displayed. The number of steps should be recorded and entered as the new IGV Maximum Travel setpoint.
3. Perform the following steps only if a pulse inlet guide vane actuator is installed.
   a. Power up the UCP2 and choose Inlet Guide Vane Output Type <Pulsed> from the Machine Configuration menu.
   b. In the Service Test menu, choose Manual Loading/Unloading Duty Cycle <50%>.
   c. Next, choose IGV Control <Load> or <Unload> in the Service Test menu. Measure the duty cycle (full open to full close or vice versa) in seconds.

d. Divide this number by 2 to obtain stroke time. Input this value at Inlet Guide Vane Stroke Time in the Field Start-up menu.

4. Configure all settings in the Operator Settings, Service Settings, Service Tests, and Diagnostics groups as required in CVHE-M-7.

Note: In the Service Test Group - Starter Dry Run should be disabled since this does not apply to retrofit installations using pilot relays to control the starter.

Note: In order to calculate the Current Transformer Factor, evaluate the following formula:

CT Factor = (Actual Motor RLA)/ (CT Meter Scale from Table 7) x 138.89%

Use the CT Factor to determine the current Overload Settings #1 and #2 on Table 9.

5. Run the chiller through the normal operating range to determine that the controls are properly configured and installed.

This completes the retrofit installation procedure. Proper configuration of the UCP2 for optimal performance is covered in CVHE-M-7.

Table 9 -
Current Overload Setting Selection

CT Factor	Current Overload Setting #1	Current Overload Setting #2	CT Factor	Current Overload Setting #1	Current Overload Setting #2
66	00	255	84	19	236
67	01	254	85	20	235
68	02	253	86	21	234
69	03	252	87	22	233
70	04	251	88	22	233
71	06	249	89	23	232
72	07	248	90	24	231
73	08	247	91	25	230
74	09	246	92	25	230
75	10	245	93	26	229
76	11	244	94	27	228
77	12	243	95	28	227
78	13	242	96	28	227
79	14	240	97	29	226
80	15	240	98	30	225
81	16	239	99	30	225
82	17	238	100	31	224
83	18	237			

TRANE

Supplement CVRB-SUPL-1

Library	Service Literature
Product Section	Commercial Aftermarket Products
Product	CenTraVac
Model	CVRB
Literature Type	Installation
Sequence	1
Date	May 1996
File No.	SV-CAP-CTV-CVRB-IN-1-596
Supersedes	New

Supplement to CVHE-CLD-1

Model CVRB

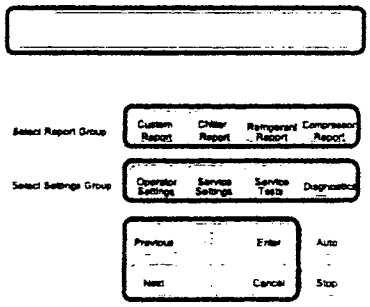

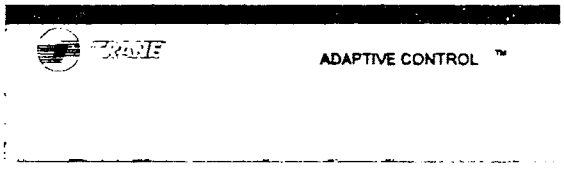

Since the Trane Company has a policy of continuous product improvement it reserves the right to change specifications and design without notice. The installation and servicing of the equipment referred to in this booklet should be done by qualified, experienced technicians.

© American Standard Company 1996

Instructions

The following pages highlight revisions to the CVHE-CLD-1. These are important changes that impact the set-up of the UCP2 Control Panel Conversion package. Items that have been revised are separated by menu type and are underlined.

Compressor Report

Inlet Guide Vane Position

The following screen will be suppressed if "Inlet Guide Vane Output" is set to "Pulsed".

Inlet Guide Vane Position:	XXX.X Open
Inlet Guide Vane Position:	XX.X Degrees

Refrigerant Pressure Analog Output Option

Rfgt Pressure Output Option:	[status]
Press (+) (-) to Change Setting	

Possible values for status are: % Cond; Factory Default.
Delta.

Min Delta Pressure Calibration

The following will be displayed only if the "Refrigerant Pressure Analog Output Option" is set to "Delta".

Min Delta Press Calib (2 VDC)	XXXX PSID/kPa
Press (+) (-) to Change Setting	

The range of values is 400 Psid (0-2758 kPa) in increments of 1 Psid/kPa.
Factory Default is 0 Psid (0 kPa).

Max Delta Pressure Calibration

The following will be displayed only if the "Refrigerant Pressure Analog Output Option" is set to "Delta".

Max Delta Press Calib (10 VDC)	XXXX PSID/kPa
Press (+) (-) to Change Setting	

The range of values is 1-400 Psid (7-2758 kPa) in increments of 1 Psid/kPa.
Factory Default is 30 Psid (207 kPa).

IGV Stroke Time

The following will be displayed only if the "Inlet Guide Vane Output" is set to "Pulsed".

```
Inlet Guide Vane Stroke Time:        XXX Sec
Press (+)(-) to Change Setting
```

The range of values is 15 to 100 Seconds in increments of 1 Second. Factory Default is 45 Seconds.

Low Differential Oil Pressure Cutout

```
Low Diff Oil Press Cutout:           XX psid/kda
Press (+)(-) to Change Setting
```

The range of values is 6 to 35 psid in increments of 1 psid. Factory Default is 9 psid.

Refrigerant Type

Help Note: This is important for correct temperature to pressure conversion.

```
Refrigerant Type:                    [type]
Press <+> <-> to Change Setting
```

Possible values type are: R11, R12, R134a, Water, R22, R113. Factory Default is R123.

Hot Gas Bypass Option

This option is mutually exclusive with the pulsed IGV output. If this option is installed, the "Inlet Guide Vane Output" shall be set to "Stepper Motor".

```
Hot Gas Bypass Option:               [Status]
Press (+) (-) to Change Setting
```

Possible Values for Status are: Installed, Factory Default is Not installed

If the Hot Gas Bypass Option is set to Installed and the Inlet Guide Vane Output is currently Pulsed, the Inlet Guide Vane Output will be set to Stepper Motor and the following will be displayed for 3 seconds to indicate the change.

```
Inlet Guide Vane Output
Has been Set to  Stepper Motor
```

IGV Output Type

The pulse option is mutually exclusive with HGBP. If this item is set to "Pulsed", the "Hot Gas Bypass Option" shall be set to "Not Installed".

```
Inlet Guide Vane Output:                [Y]
Press (+) (-) to Change Setting
```

Possible Values for Y are: Stepper Motor, Factory Default
Pulsed

If Inlet Guide Vane Output is set to Pulsed and Hot Gas Bypass Option is currently set to Installed, the Hot Gas Bypass Option will be set to "Not Installed" and the following will be displayed for 3 seconds to indicate the change.

```
Hot Gas Bypass Option
Has Been Set to Not Installed
```

Vane Control Status/Vane Position Commands

The following screens will be displayed only when "Inlet Guide Vane Output" is set to "Stepper Motor". The status of the Vane Control is as follows:

```
Vane Control Is:                    [Status]
Press (+)(-) to Change Setting
```

The possible values of [Status] are: Manual, Factory default is Auto.
If the vane control status is "Auto" the following is displayed:

```
Inlet Guide Vane Position      XXX.X%
[Limit Mode]
```

If the vane control status is "Manual" the following is displayed.
When the Vane Control status is transitioned from "Auto" to "Manual", the manual target is initialized to the current vane position.

```
Vane Pos XXX.X%                Target XXX.X% Open
[Limit Mode]<+> <-> to Change Target
```

The possible values of [limit mode] are: Current Limit, Condensing Limit, Evap Limit, Blank

Vane Control Status/Manual Load and Unload

The following screen will be displayed only when the "Inlet Guide Vane Output" is set to "Pulsed".

```
IGV control Is:                     [Status]
LWT  =  xx.x  f/c                       [Y]
```

The possible values of [status] are "Auto", "Hold", "Load", or "Unload". Factory Default is "Auto".
The possible values of Y are "Current Limit", "Condenser Limit", "Evap Limit", and "(+)(-) and (Enter)".
The latter is displayed when there are not limits operating.

Manual Loading/Unloading Duty Cycle

The following screen will be displayed only when the "Inlet Guide Vane Output" is set to "Pulsed".

Manual Loading/Unloading Duty Cycle:	xx%
Press (+)(-) to Change Setting	

Range of Values is 0 to 50% in increments of 1%. Factory Default is 30%.

Vane Position

The following screen will be displayed only when the "Inlet Guide Vane Output" is set to "Stepper Motor".

Inlet Vane Position:	XXXX Steps
Inlet Guide Vane Position:	XX.X degrees

Hot Gas Bypass Valve Control Status/Manual Open and Close Commands

If HGBP is installed in the unit the following screen shall be displayed.

HGBP Valve Control Is:	Status
LWT = XX.X fc	[Y]

The possible values of [status] are "Auto", "Open", "Hold" or "Close". ROM Default is "Auto".
The possible values of Y are "Current Limit", "Condenser Limit", " Evap Limit" and "(+) (-) and (Enter)".
The latter is displayed when there are no limits operating.

Troubleshooting/ Repair

RMWD-TSR-1

Library	Service Literature
Product Section	Commercial Aftermarket Products
Product	Refrigerant Monitor
Model	RMWD
Literature Type	Troubleshooting/Repair
Sequence	1
Date	May 1996
File No.	SV-CAP-RM-RMWD-TSR-1-596
Supersedes	New

Trane™ Refrigerant Monitor

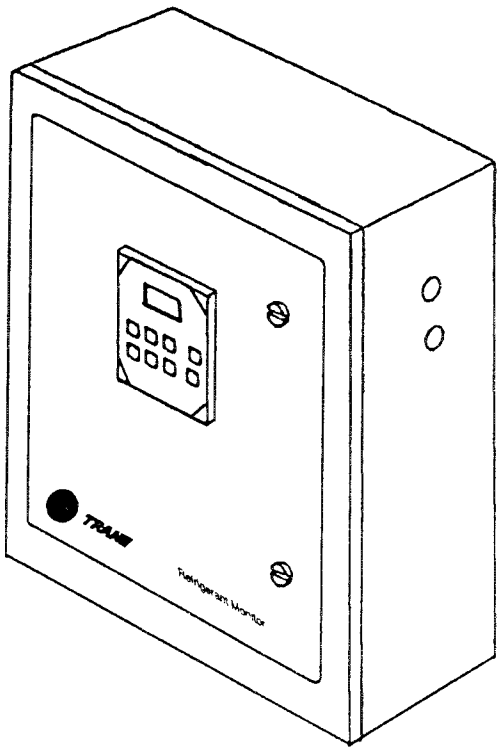

Since the American-Standard Company has a policy of continuous product improvement, it reserves the right to change specifications and design without notice. The installation and servicing of the equipment referred to in this booklet should be done by qualified, experienced technicians.

© American Standard Inc. 1996

Table of Contents

WARNING

This manual, including the warnings and cautions inside, must be carefully read and followed by all persons who use or maintain this product, including those who have any responsibility involving its selection, application, service or repair. This monitor will perform as designed only if used and maintained according to the instructions. Otherwise, it could fail to perform as designed and persons who rely on this product could sustain serious personal injury or death.

Page	Description
3	**Model Number**
4	**General Information**
4	Literature Change History
4	Introduction
4	Unit Description
5	Infrared Photoacoustics
6	RMWD Style Refrigerant Monitor
	- Monitor Installation
	- Wiring
	- Status LED's on main circuit board
	- Filters
12	Refrigerant Monitor / UCP2 Connections
12	Tracer Connections
12	Battery Backup
12	Run Test Monitor
13	Software Issues
13	Software Version 1.0
13	Software Version 2.0
13	Software Version 3.0
14	Monitor Cross-Sensitivity
16	Monitor Control
16	Clear Language Display (CLD)
16	R-12 "Undefined" Message
18	**Operation**
20	**Start-Up**
20	Start-Up Sequence
21	**Bench Flow Loss**
21	Single Point Units
22	Scanner Units
24	**Scan Flow Loss**
24	Scanner Unit
26	**Module Diagnostic Messages**
26	Communication Lost With Module
26	Trouble
27	RAM Loss
27	IR Source Fail
27	Chopper Fail
28	Temp Sensor Fail
28	Scan Flow Loss
29	Out of Temp Rng
29	Rfgt Lvl Too Low
29	Rfgt Mon Fail
29	Aux Input Fail
30	Bench Flow Loss
30	Ext Reset Fail
31	**Quick Problem Checks**
31	A. Bench Flow Loss
32	B. Refrigerant level too low
32	C. Refrigerant Conversion
32	D. Diagnostic Conditions
33	**Calibration Procedure**
33	Introduction
33	General Information
34	Material Required
34	Preparing for Calibration
34	Zero Calibration Check
35	Refrigerant Span Calibration Check
37	**Pressure Switch Checkout**
38	**Technical Specifications**
38	Mechanical
38	Electrical
38	Gas Sensing Characteristics
39	Environmental
39	Agency Listing

List of Figures

Page	Fig.	Description
5	1 -	Typical Infrared Photo-acoustic Setup
7	2 -	Typical RMWD monitor
8	2a -	View A, B, C for Figure 2
9	3 -	Remote Mounted Wiring
10	4 -	UCP2 Schematic Wiring for Clear Language Display, Stepper and Circuit
15	5 -	Typical Unit Mounted Refrigerant Monitor
16	6 -	RMWD Wiring for Controlling Two Devices from One Alarm Contact
17	7 -	Typical Clear Language Display Wiring
23	8 -	Scanner Assembly
25	9 -	Instrument Flow Diagram
31	10 -	Measuring Bubble Activity
36	11 -	Zero Calibration Check Connections
36	12 -	Span Calibration Check Connections
37	13 -	Pressure Switch Testing Equipment
37	14 -	Pump Clearances

List of Tables

Page	Fig.	Description
21	1 -	Single Point Unit Start-Up Diagnostic Routine
22	2 -	Scanner Unit Start-Up Diagnostic Routine
32	3 -	Diagnostic Conditions

Model Number

Unit Model Number

For service and replacement purposes, the Trane Model RMWD Refrigerant Monitor is assigned a multiple-character alphanumeric model number that precisely identifies each unit. The model number key is shown here.

Use of the model number will enable the owner/operator, installing contractor, and service technician to define the characteristics of any RMWD unit. Be sure to refer to the model number when ordering replacement parts or requesting service.

Sample Model Number

Model No.	RM	W	D	120	0	A	A0
Digit No.	1, 2	3	4	5,6,7	8	9	10,11

Digits 1, 2
Product Description
RM = Refrigerant Monitor

Digit 3
Mounting Configuration
U = Unit Mount
W = Wall Mount

Digit 4
Development Sequence
D = 4th

Digit 5
1 = With Scanner
2 = Without Scanner

Digit 6
Human Interface
1 = With Clear Language Display
2 = Without Clear Language Display

Digits 7,8
0 = Not Used

Digit 9
Gas Analyzed
A = HCFC-123
B = CFC-11
C = HCFC-22
D = HFC-134a
E = CFC-12
F = CFC-113
G = CFC-114
H = CFC-500
J = CFC-502
K = Ammonia*
S = Special*
*Not Listed under UL 2075.

Digits 10, 11
Design Sequence
A0 = First Design Sequence

General Information

Literature Change History

RMWD-TSR-1 (May 1996)

Original issue of the trouble shooting manual pertaining to Trane™ Model RMWD Refrigerant Monitor design sequence "A0".

Introduction

This document provides troubleshooting and repair information for the Trane RMWD style Refrigerant Monitor. Included is a discussion of the internal diagnostic test the instrument processor performs on the flow system hardware during start-up in addition to performance under normal operating conditions. Finally, unit diagnostic messages are described and specific component tests are provided.

Unit Description

The Trane™ Model RMWD Refrigerant Monitor circulates room air through a sensing cell to provide a continuous indication of refrigerant vapor concentration. It is intended for indoor use in mechanical equipment rooms which house air conditioning or refrigeration equipment or in areas where bulk refrigerants are stored.

The monitor utilizes infrared photoacoustic sensing technology, allowing accurate measurement of refrigerant vapors with minimum interference from other chemicals in the vicinity. The instrument is compound-specific and factory calibrated for the specific refrigerant of interest. It is capable of measuring down to 1 parts-per-million (ppm) and displaying refrigerant concentrations from 0-1,000 ppm. The monitor can signal alarms at three different concentration levels. These alarms are factory set, but can be easily adjusted in the field. A unit "trouble" alarm indicates internal problems with the instrument. A level alarm or a trouble alarm condition will cause the display to flash with a message and activate a dry contact relay(s) which can be used to control external alarm lights or horns, start emergency ventilation, or signal a building management system.

The refrigerant level alarm relays can be configured as latching or non-latching. 0-10 VDC and 4-20 mA analog outputs are provided for connection to a data recorder or building management system. These analog outputs can be scaled as 0-100 ppm or 0-1000 ppm. The standard unit monitors one zone. The optional multi-channel scanner can be factory or field installed to monitor up to four zones.

General Information

Infrared Photoacoustics

Increased industrialization together with a growing concern for human safety and the environment have stimulated the demand for sensitive and reliable methods of detecting trace amounts of pollutants and toxic gases. The advantages of infrared photoacoustic gas detection which the Trane RMWD refrigerant monitor uses include greater sensitivity, high immunity to interferents, fast response time and low maintenance.

The RMWD refrigerant monitor detects toxic gases by a process called infrared photoacoustic spectroscopy. The photoacoustic effect is the emission of sound by an enclosed sample on the absorption of chopped infrared light.

Portions of the Infrared Photoacoustics section reprinted with permission from Brüel and Kjær Instruments, Inc.

When a gas is irradiated with light, it absorbs some of the incident light energy, proportional to the concentration of the gas. The absorbed light energy is immediately released as heat and this causes the pressure to rise. When the incident light is modulated at a given frequency, the pressure increase is periodic at the modulation frequency. Pressure waves, or sound waves as they are commonly known, are easily measured with a microphone. They are audible if their frequency is between 20 Hz and 20 kHz.

The intensity of the sound emitted depends on a number of factors; the nature and concentration of the substance and the intensity of the incident light.

The selectivity which can be achieved in spectroscopy is due to the fact that substances absorb light of specific wavelengths which are characteristic of that substance.

The sequence of events in this process are.

- gas sample is sealed in measurement chamber
- chamber is irradiated with pulsed, narrow-band light
- gas absorbs light proportional to its concentration and converts it to heat
- gas heats and cools as the light is chopped
- temperature fluctuations generate pressure waves,
- pressure waves are detected by microphone

The main parts of a photo-acoustic set-up (see Figure 1) are a chamber to contain the gas sample, a light source, a means of modulating the light (usually a chopper), a detector to measure the sound (usually a microphone) and a method of processing the signal. The signal is interpreted by the electrical components into a parts per million (ppm) display.

Figure 1 - Typical Infrared Photoacoustic Setup

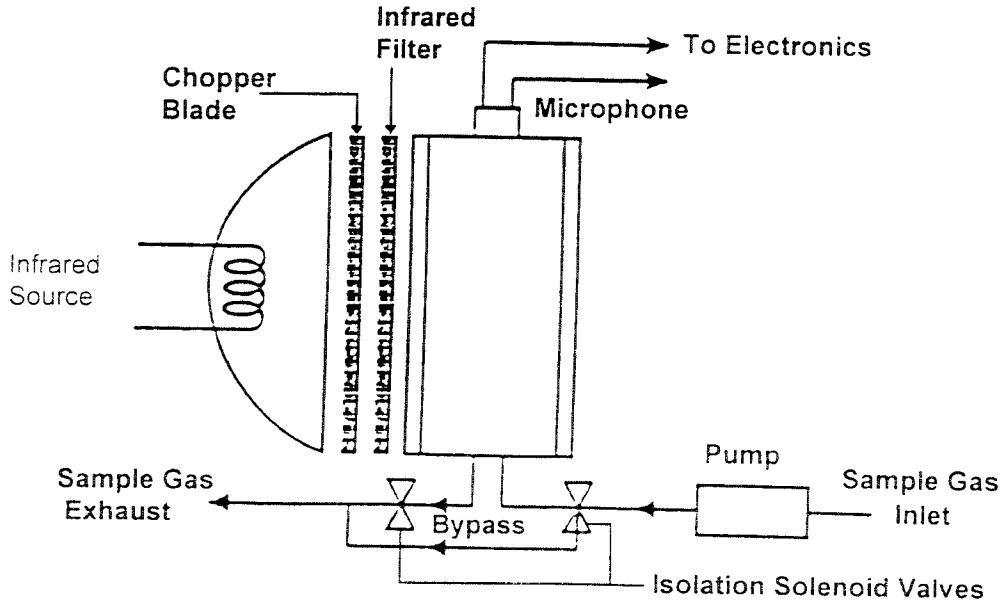

General Information

Fuse Holder **Jumper**

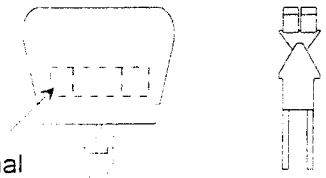

Internal Fuse - Replaceable

Fuse = Littelfuse 235002 or Buss GMA-2A

110 Volts AC, 2 Conductor

GND		GND
ACN	Jumper	ACN
AC	Fuse	AC

220 Volts AC, 2 Conductor, 50 Hz

GND		GND
ACN	Jumper	ACN
AC	Fuse	AC

220 Volts AC, 3 Conductor, 50 Hz

GND		GND
ACN	Fuse	ACN
AC	Fuse	AC

RMWD Style Refrigerant Monitor

Monitor Installation

- Securely mount vertically on wall away from vibration sources using four mounting tabs
- Monitor Installation, Operation and Maintenance manual, RMWD-IOM-1, or the latest revision, has detailed installation information
- Application engineering manual REF-AM-3, or the latest revision, Refrigeration System Equipment Room Design, has further recommendations regarding sampling locations to meet ASHRAE 15 guidelines

Wiring

- Monitor should have a dedicated power source to make sure it is always on even if other equipment is off
- Monitor will accept 100-240 volts a.c., 50 or 60 Hz
- Fuses (FUS 0927), jumper (PLU 0528) and fuse holder (HLD 0167 - black "key") ship with monitor in small box and are inserted in terminal strip, see examples at left for location.
- Monitor alarm contact ratings: Resistive: 7.2 amps at 120 volts a.c., 5.0 amps at 240 volts a.c.; Inductive: 2.88 amps pilot duty, 1/3 HP, 7.2 FLA, 43.2 LRA

Note: Monitor has a NEMA 4 rated enclosure. Use the plugged knockouts provided. Do not cut holes for wiring because shavings may short the electronics. Any added holes may compromise NEMA 4 integrity of the enclosure.

Trouble relay energizes during normal operation which closes normally open contacts. If monitor trouble occurs, relay is de-energized and contacts open

- Auxiliary input
  - 4-20 mA signal can come in to monitor from another device like an oxygen monitor - 18 AWG shielded wire is recommended, maximum of 250 feet (76 m)
  - level 3 alarm contacts change on excessive refrigerant concentration or mA signal
- 4-20 mA and 0-10 volt d.c. analog outputs
  - proportional to displayed refrigerant concentration
  - software selectable for 0-100 or 0-1000 ppm
  - 18 AWG shielded wire is recommended
  - 500 feet (152 m) max. length

Status LED's on main circuit board (see Figure 3)

- **Power:** green if normal
- **Alarm levels if refrigerant concentration exceeds setpoints:**
  Level 1 - amber
  Level 2 - red
  Level 3 - red
- **Ready:** green if normal
- **Trouble:** red if diagnostic appears

Filters

Change sample filters (ELM1144 - end of line, FLR1396 - inside monitor) regularly depending on the cleanliness of the equipment room. A flow loss condition at the monitor indicates a change may be required.

**Figure 2 - Typical RMWD Monitor
Major Component Locations**

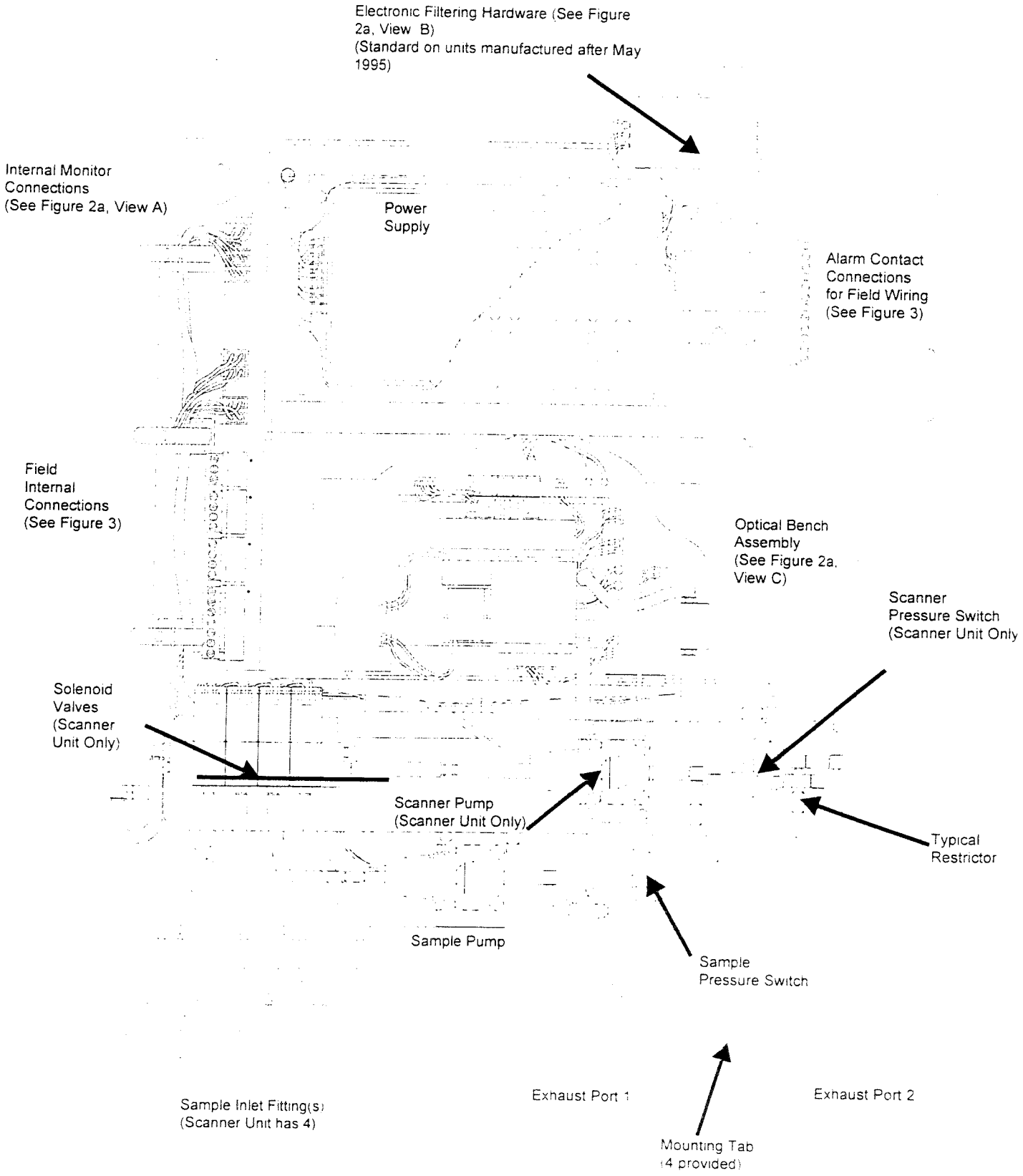

Figure 2 a - Typical RMWD Internal Wiring Connections

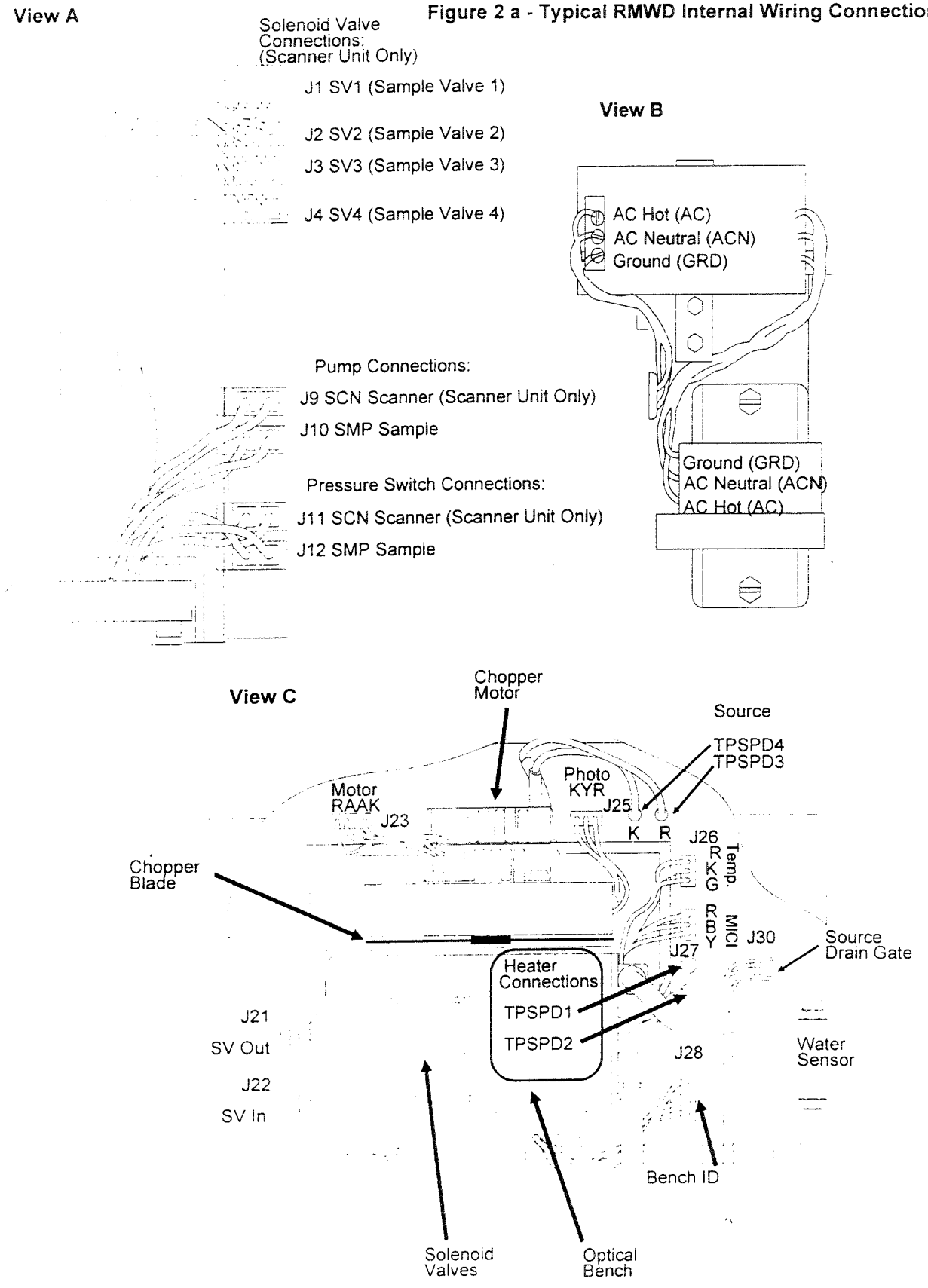

Figure 3

Remote Mounted Wiring

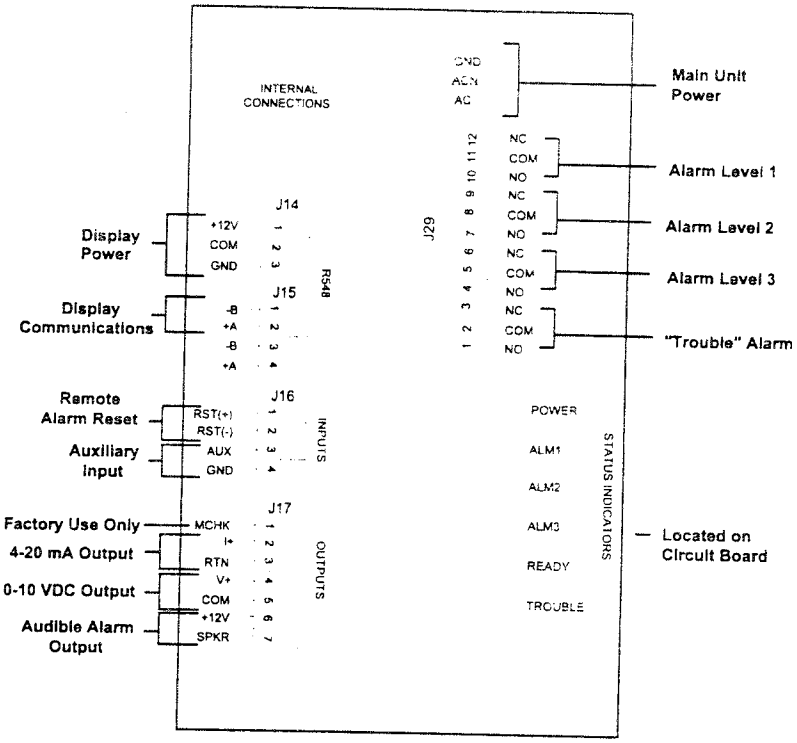

Unit Mounted/UCP2 Wiring

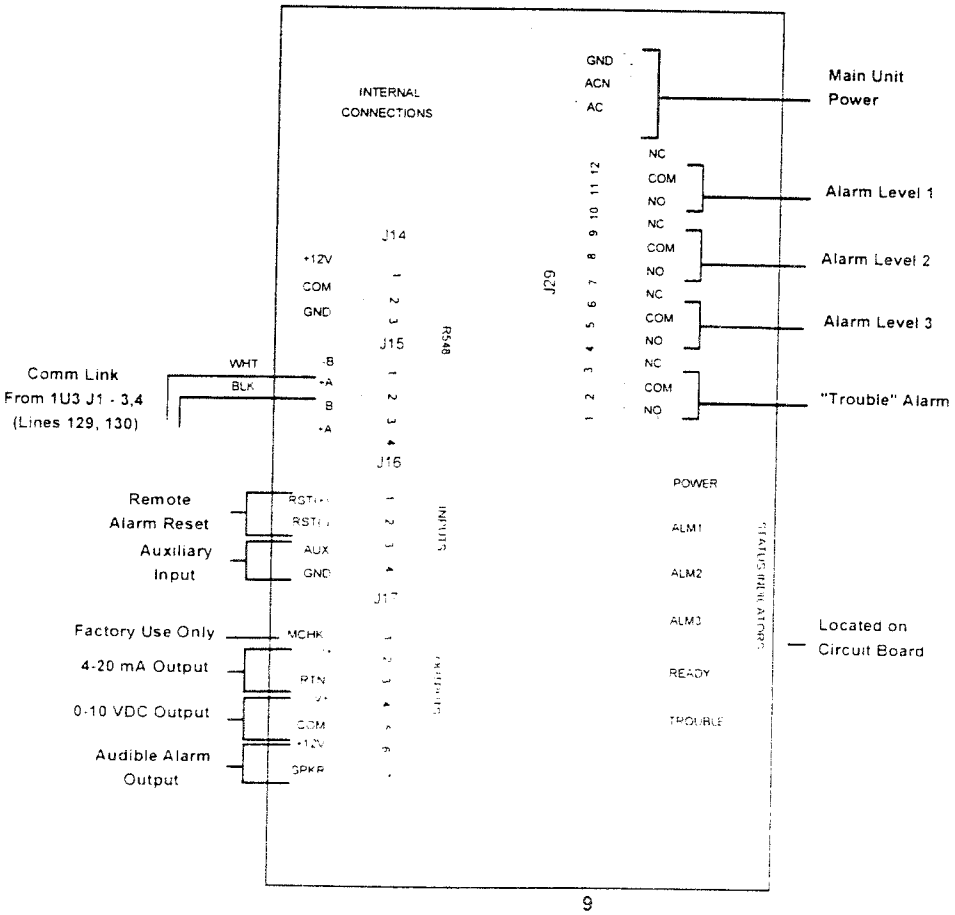

Figure 4 - UCP2 Schematic Wiring for Clear Language Display, Stepper and Circuit

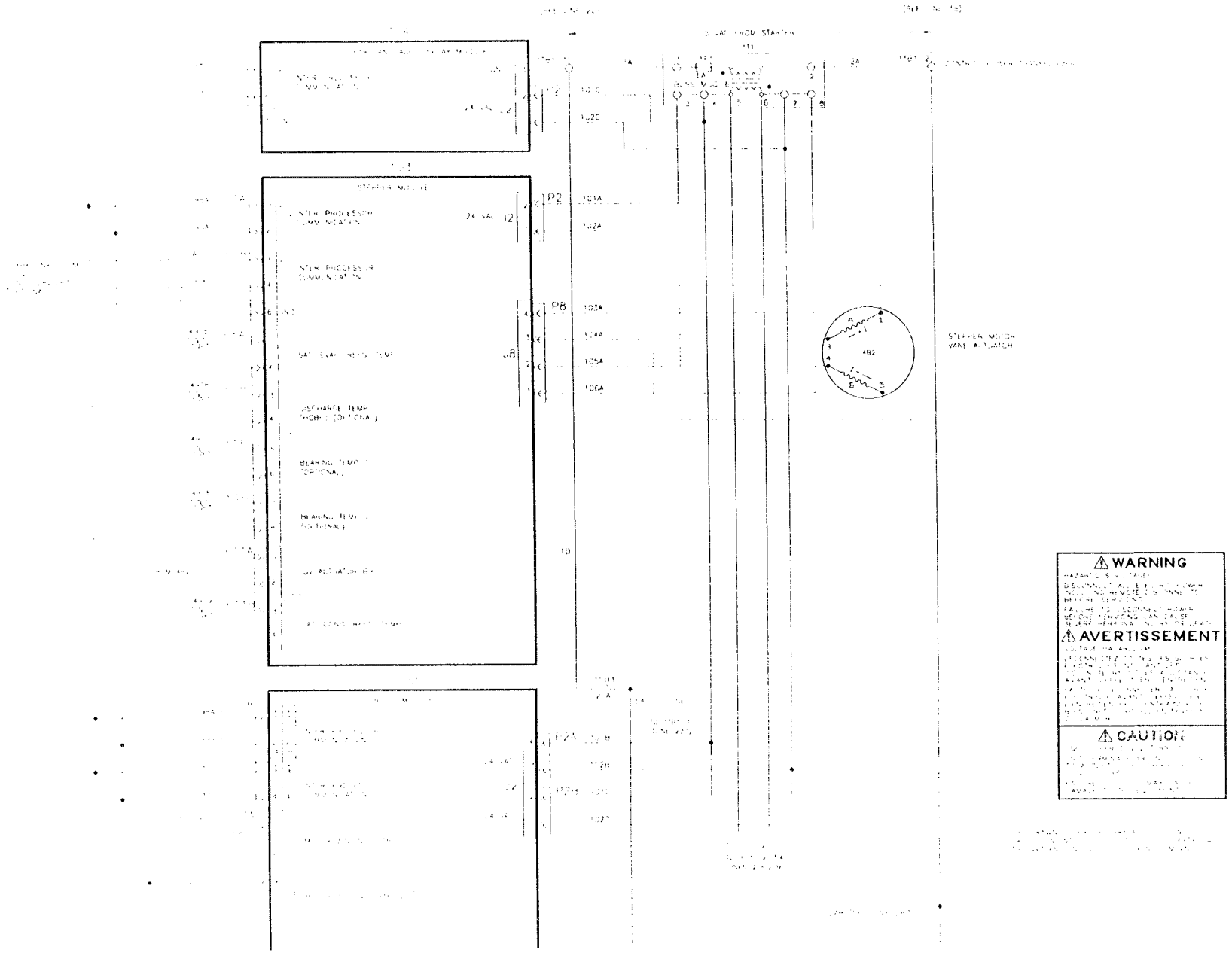

Figure 4 - UCP2 Schematic Wiring for Clear Language Display, Stepper and Circuit

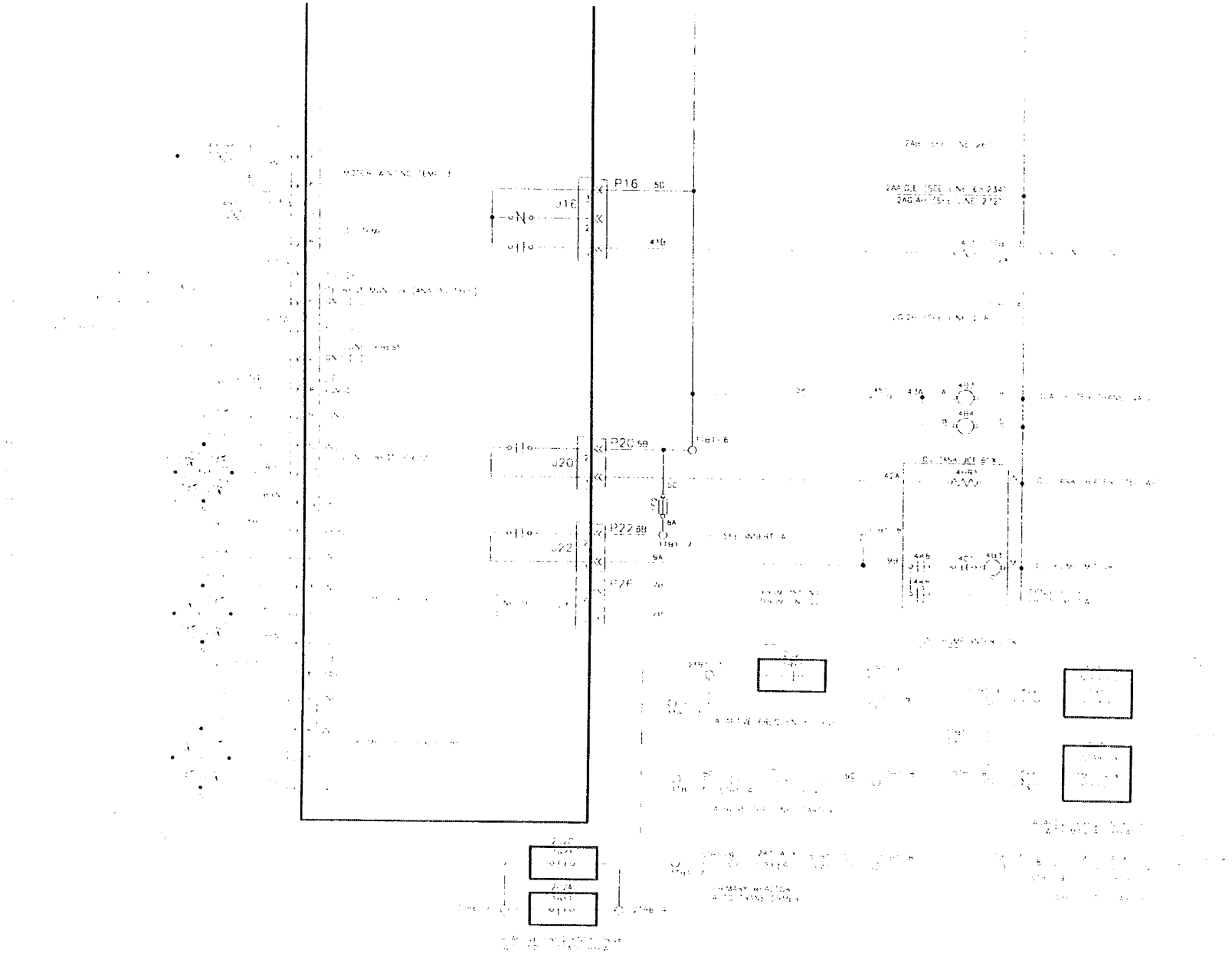

Refrigerant Monitor / UCP2 Connections

Two options exist:

- **Analog**: Alarm setpoint changes, etc. are done from the monitor's keypad. The UCP2 will only display the current parts per million (ppm) and has no control over the monitor. The UCP2 must be configured for analog type refrigerant monitor to display the ppm readout. Run 18 AWG shielded, twisted wire to the following terminals. **Note**: the maximum distance is 500 feet (152 m).

UCP2 - 1U2 (Circuit) Module		Refrigerant Monitor
J5-5	To	J17-2
J5-6	To	J17-3

See Figure 4 for wiring details.

- **IPC**: All settings and control of the refrigerant monitor is done through the UCP2 keypad. **Note:** To meet UL requirements, a green light (KIT2990) must be present in the monitor's door to show that power is applied. The UCP2 must be configured for IPC which will allow the refrigerant monitor screens in UCP2 to become active. Run 18 AWG shielded, twisted wire to the following terminals - 500 feet (152 m) maximum.

UCP2 - 1U3 (Stepper) Module		Refrigerant Monitor
1U3 J1-3	To	J15-1
1U3 J1-4	To	J15-2
J1-6, Use for ground		

See Figure 4 for wiring details.

Note 1: See software issues for related refrigerant monitor and UCP2 compatibility.

Note 2: KIT 3032 adds a human interface at the monitor to a RMWD monitor which doesn't have one.

Note 3: Control is from UCP2 or human interface on the monitor, not both.

Tracer Connections

- If UCP2 exists:
  A UCP2 TCI Comm 4 module (to Summit) and a TCI Comm 3 module (to Tracer 100) will upload the ppm display from the refrigerant monitor if configured in UCP2 as an analog monitor. If the refrigerant monitor is configured and connected IPC to UCP2, the ppm and any monitor diagnostics are passed up to Tracer.
- No UCP2:
  Tracer 100 Series does not accommodate connecting the Refrigerant Monitor directly to the Tracer. It would need to be connected to a PCM or UPCM. Tracer Summit BCU's each have two (2) Universal Input points that can be configured to interface the Refrigerant Monitor analog and / or binary outputs.

What Tracer does with the information depends on the sequence of operation for the job, what points are to be set up for alarms and how the Tracer is programmed. Contact BASD for details.

Battery Backup - The micro processor has a battery backup and the computer chip is non-volatile so that settings and memory are not lost when power is off to the unit. The unit itself does not have a battery backup to continue monitoring during a power outage.

Run Test Monitor - Alarm contact relays can be tested by using the span gas from the calibration kit. Change the alarm contact setpoints below the concentration for the span gas and apply the span gas to the sample inlet. The contacts should change state.

Software Issues

A white label located in the top of the monitor enclosure shows the manufacturing date. The software version number for the human interface is displayed during warm-up. This information is also found in the Status Menu.

Design sequence A, Software version 1.0 - The first date codes in production were mid-August 1994. The optional audible alarm will sound on a level 3 alarm.

Design sequence A, Software version 2.0 - This started in production on March 2, 1995 and allows communication / programming from the UCP2. Therefore, the monitor could function without the clear language display. This version will support the optional monitor mounted audible alarm selectability for alarm levels 1, 2 or 3. The audible alarm can also be set to alarm for a monitor trouble condition. Note that this is independent of the three alarm levels. Refrigerant R-12 monitors are fully supported by software.

Design sequence A, Software version 2.0 - UL label applied starting April 1, 1995. At the same time additional electronic hardware was added to the bench circuit to minimize interference from radiated electrical noise such as radio pagers, etc.

Design sequence A, Software version 3.0 - All refrigerant monitors with a date code of June 20, 1995 or later have version 3 of refrigerant monitor software. This software will change the analog output so it doesn't go to 2.0 mA during monitor check. This situation caused nuisance diagnostics on the UCP2.

Version 2 software will allow the UCP2 to communicate directly with the refrigerant monitor via the IPC (inter-processor communication link). The UCP2 must have software released on February 17, 1995 or later, and the modules must have the extensions as shown below.

Description	CTV X-Code	RTHB X-Code
Chiller Module (required UCP2 module)	X13650450-08	X13650499-05
Clear Language Display Module (required UCP2 module)	X13650448-07	X13650448-07
TCI Comm4 Module (optional UCP2 module)	X13650457-05	x13650457-05
TCI Comm3 Module (optional UCP2 module)	X13650460-05	X13650460-05
TCI Printer Interface Module - (optional UCP2 module)	X13650458-05	X13650458-05

General Information

Monitor Cross-Sensitivity

The Trane Refrigerant Monitor is factory calibrated specifically for the refrigerant of interest. With the large number of different chemicals and refrigerants in equipment rooms, it is very important that an air monitoring device be as resistant to cross-sensitivity as possible. The photo-acoustic technology used in this instrument is one of the most selective available; however, the instrument may respond, in varying degrees, to other chemicals that may be in the monitored area. Listed below are the instrument's sensitivity to 100 ppm of other commonly used refrigerants when calibrated for the specific refrigerant listed. These are typical values for reference only.

Example: A monitor calibrated for HCFC-123 will display 4 ppm when exposed to 100 ppm of HCFC-22.

Calibrated for HCFC-123

Refrigerant	Response
CFC-11	<1 PPM
HFC-134a	140 PPM
HCFC-22	4 PPM
CFC-113	80 PPM

Calibrated for CFC-11

Refrigerant	Response
HCFC-123	3 PPM
HFC-134a	20 PPM
HCFC-22	30 PPM
CFC-113	25 PPM

Calibrated for HCFC-22

Refrigerant	Response
HFC-134a	25 PPM
CFC-11	16 PPM
HCFC-123	35 PPM
CFC-113	39 PPM

Calibrated for HFC-134a

Refrigerant	Response
HCFC-22	1 PPM
HCFC-123	8 PPM
CFC-11	2 PPM
CFC-113	17 PPM

Due to the large number of possible interferants other than refrigerants, it is impractical to list them. Direct any questions regarding specific interferants that are expected to be in the monitored area to your local Trane office.

Note: Cross-sensitivity data not verified during UL testing.

The optional Trane unit mounted refrigerant monitor is operationally identical to the remote mounted monitor, except for the clear language display. This has been replaced by a plain, painted front panel, with a green light to indicate power is present. The unit mounted monitor also has some additional stiffeners and hardware to eliminate the transmission of any vibration.

The menu screen "Refrigerant Monitor Type" at the UCP2 human interface allows the selection of two possible values:

- 01 - Analog Monitor
- 02 - IPC Monitor

When **IPC Monitor** is entered, the menu asks for a password prior to accessing the settings and then rotates through a series of screens to initiate the monitor. The password, UCP2 set-ups, inputs, calibration and diagnostic menus are found in the latest revision of CVHE-CLD-1 under the heading "Refrigerant Monitor Settings Group".

The unit mounted refrigerant monitor is designated 4U1 on Trane wiring diagrams. Although the Interprocessor Communication can go to any IPC connection, it was placed at the stepper module 1U3 since this was an open connection.

Figure 5 - Typical Unit Mounted Refrigerant Monitor

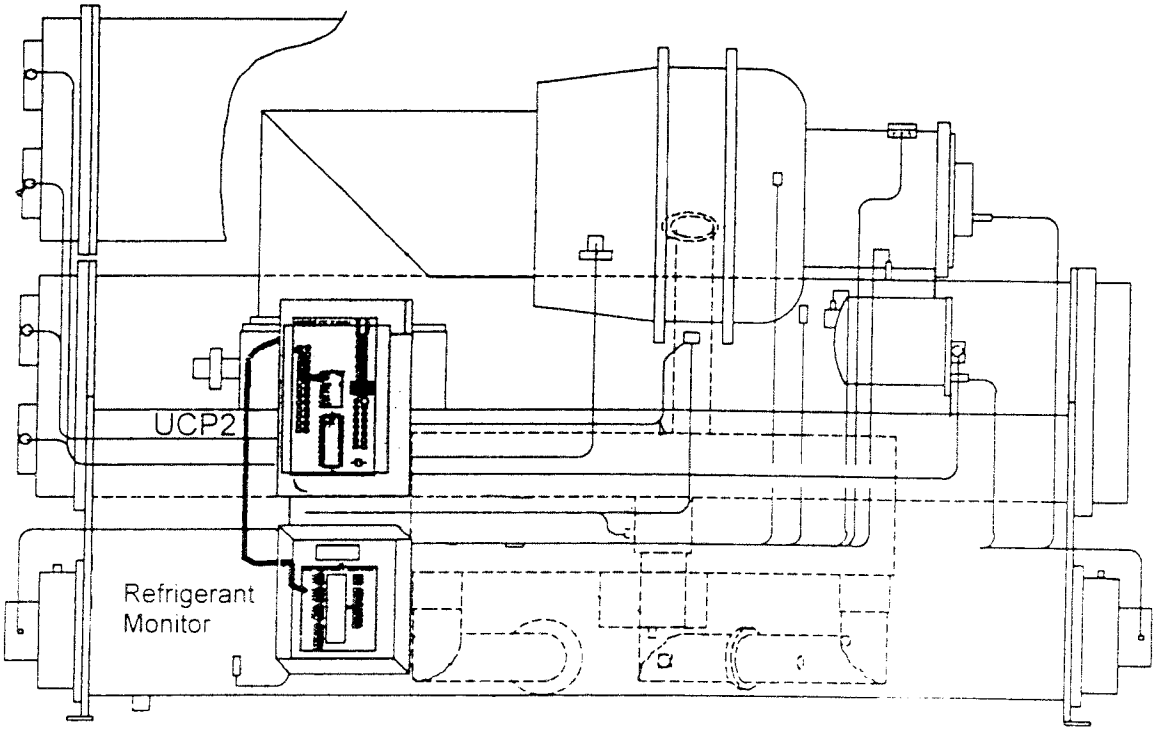

Monitor Control

RMWD refrigerant monitor control is from either the unit mounted CLD or the UCP2 (CVRB) clear language display but not both. One clear language display on the unit or UCP2 cannot be used to control more than one monitor.

Method for controlling two or more devices from a single monitor alarm contact:

The dry contacts in the refrigerant monitor can be used to control multiple devices such as lights, buzzers, exhaust fan contactors, etc. The Technical Specifications section of this manual lists the monitor contact ratings which should not be exceeded. The preferred method for powering multiple devices is shown in Figure 6 which shows a relay powered through the monitor's alarm contacts. The relay's contacts then power the other devices. This provides isolation so that sensitive components like the Trane tower light can be wired to the same circuit as an exhaust fan contactor.

Clear Language Display (CLD)

All setup, alarm, diagnostic, measured concentration and calibration information for the monitor is accessed through an eight button, two line, 16 character backlit clear language display (CLD) mounted in the unit front panel.

Items to check:

- The chip may have a terminal that appears to be in place, but is actually bent over on top of the socket, making occasional contact. Look under the chip.
- Touch the keypad to assure that the display has not been turned off. Try more than one key in case it is a keyboard problem. Check the keyboard connector on the CLD board.
- On the RMWD from the top pin in the main board to the bottom the voltages are as follows:
  - J 14 - 1, +12 vdc
  - J 14 - 2, Common - 0 vdc
  - J 14 - 3, Ground - 0 vdc
  - J 15 - 1, -B + 1.6 to GND
  - J 15 - 2, +A + 2.3 to GND
    Measured 0.7 to 0.8 from A to B
  - J 15 - 1, -B to + A, + 0.7 vdc

If the display is not lit, check the connection on the CLD board with the red and black wires which powers the display light.

R-12 "Undefined" Message

The R-12 monitors, version 1.0, were coded so there was no way to put R-12 onto the clear language display. A compromise was to use the word "undefined". Version 2.0 or later software fully supports R-12 monitors.

Figure 6 - RMWD Wiring for Controlling Two Devices from One Alarm Contact

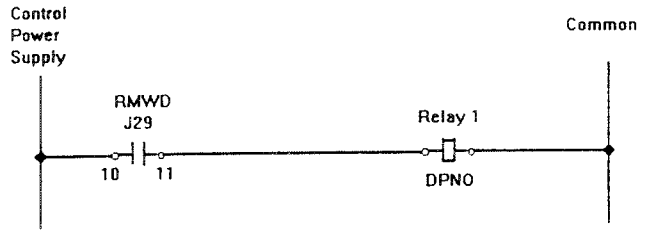

Contact Rating: See Technical Specifications pages

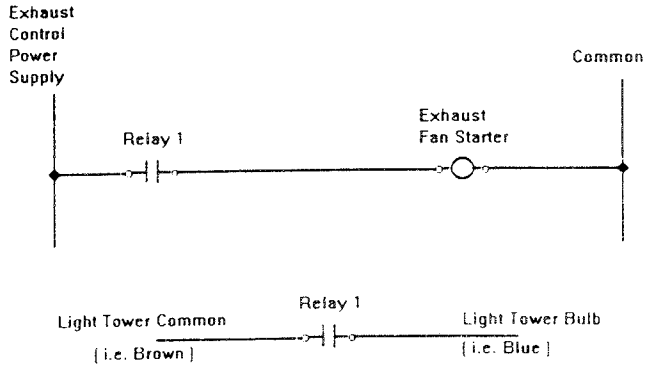

Figure 7 - Typical Clear Language Display Wiring

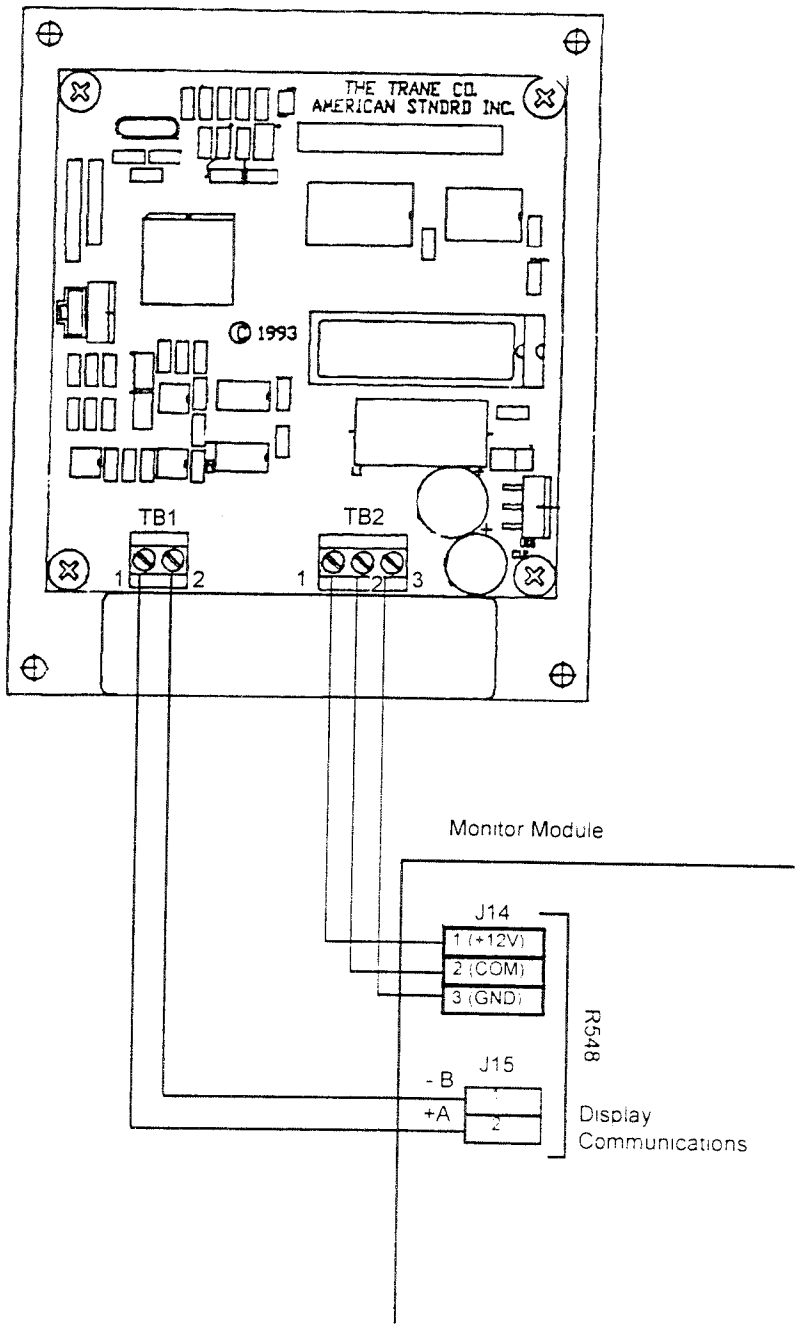

Major Menu	Side Menus	Description
READY XXXX ppm R-XXX		Refrigerant Monitor operating mode [WARMUP, READY, MONITOR CHECK, TROUBLE] (Single Channel Unit Only)
CHAN X READY XXXX ppm R-XXX		Refrigerant Monitor operating mode [WARMUP, READY, MONITOR CHECK, TROUBLE] (Channel Scanner Unit Only)
1 STATUS Report <Enter> to View		Entry point into the SAMPLE Report
	Current Sample = XXXX ppm R-XXX	The current refrigerant sample point (displayed if channel scanner is not installed)
	Current Chan X = XXXX ppm R-XXX	The current refrigerant sample point (displayed if channel scanner is installed)
	Last Channel 1 = XXXX ppm R-XXX	The last value read from Sample Point #1 (displayed if channel scanner is installed)
	Last Channel 2 = XXXX ppm R-XXX	The last value read from Sample Point #2 (displayed if channel scanner is installed)
	Last Channel 3 = XXXX ppm R-XXX	The last value read from Sample Point #3 (displayed if channel scanner is installed)
	Last Channel 4 = XXXX ppm R-XXX	The last value read from Sample Point #4 (displayed if channel scanner is installed)
	Case Temp=XX.X C Bench Temp=XX.X C	The temperature of the Refrigerant Monitor's Case. The temperature of the Refrigerant Monitor's Optical Bench
	Auxiliary Input = XX.X mA	The current auxiliary mA signal being sent to the monitor. (Displayed if auxiliary input is installed.)
	Clear Lang Dspl Software Ver XXX	The current software version of the Refrigerant Monitor Clear Language Display.
	Rfgt Monitor Software Ver XXX	The current software version of the Refrigerant Monitor.
2 SETTINGS Reprt <Enter> to View		Entry point into the SETTINGS Report
	Alarm Level 1 = XXXX ppm R-XXX	The minimum refrigerant concentration necessary to trigger a Level 1 Refrigerant Alarm (press + to increment, - to decrement) **XXXX ppm** *
	Alarm Level 2 = XXXX ppm R-XXX	The minimum refrigerant concentration necessary to trigger a Level 2 Refrigerant Alarm (press + to increment, - to decrement) **XXXX ppm** *
	Alarm Level 3 = XXXX ppm R-XXX	The minimum refrigerant concentration necessary to trigger a Level 3 Refrigerant Alarm (press + to increment, - to decrement) **XXXX ppm** *
	**Audible Alarm For Rfgt = XXXXX	The refrigerant alarm level which causes the optional Audible Alarm to sound [Off, Alarm1, Alarm2, **Alarm3**]
	**Audible Alarm For Trouble = XXX	Select the optional Audible Alarm to sound for a Trouble condition [**Off**, On]
	Alarm Level 1 = XXXXX	Alarm Level 1 relay configuration [Latching, **Non-Latching**]
	Alarm Level 2 = XXXXX	Alarm Level 2 relay configuration [Latching, **Non-Latching**]
	Alarm Level 3 = XXXXX	Alarm Level 3 relay configuration [Latching, **Non-Latching**]
	Channel Scanner = XXXXX	Select the multi-channel scanner [**Installed**, **Not Installed**] **Default dependent on scanner installation** (only displayed during "Warm-up")
	Scanner Chan 1 = XXXXX	Select Channel 1 Status [**Active**, Inactive] (displayed if channel scanner is Installed)
	Scanner Chan 2 = XXXXX	Select Channel 2 Status [Active, **Inactive**] (displayed if channel scanner is Installed)
	Scanner Chan 3 = XXXXX	Select Channel 3 Status [Active, **Inactive**] (displayed if channel scanner is Installed)
	Scanner Chan 4 = XXXXX	Select Channel 4 Status [Active, **Inactive**] (displayed if channel scanner is Installed)
	Dwell Threshold = XX %	Select the percentage of Alarm Level 1 necessary to dwell on a channel for an additional 60 seconds 30 - 70% (displayed if channel scanner is installed)
	Auxiliary Input = XXXXX	Select Auxiliary Input installation status [Installed, **Not Installed**]
	Aux Input Alarm = XXXXX	Select Auxiliary Input alarm status [**Enabled**, Disabled] (displayed if Auxiliary Input is Installed)
	Auxiliary Alarm Level = XX.X mA	Select the alarm condition level for the auxiliary input. (displayed if Auxiliary Input is Installed)

Bold = Factory Default
* See Factory Default Value Chart in Settings Side Menu
** Added to CLD software version 2.0

Refrigerant Monitor Menu Screens (Cont.)

Major Menu	Side Menus	Description/Ranges
	Aux Input Alarm Direction=XXXXX	The alarm direction for the auxiliary input. [**Below**. Above] (displayed if Auxiliary Input is Installed.)
	**Audible Alarm For Aux = XXXXX	Select the optional Audible Alarm to sound for an Auxiliary Input Alarm condition [**Off**. On] (displayed if Auxiliary Input is Installed)
	Analog Output Range 0-1000 ppm	Refrigerant Monitor Analog Output range [0-100ppm, **0-1000ppm**], 0-10VDC & 4-20mA scaling factor.
3 Calibration <Enter> to Cal		Entry point to CALIBRATION report
Enter Password XXXX		Enter 6 digit password "– + – – + +"; Monitor mode changes to Monitor Check.
Chan X Mon Check XXXX ppm R-XXX		Displays current refrigerant concentration. Alarms disabled.
Refrigerant Zero <Enter> to Cal		Entry point to Refrigerant Zero Calibration routine.
	Starting Cal Please Wait	Monitor module preparing for Zero calibration. If scanner is installed, locks onto Channel 1.
	Connect Zero Gas <Next> to Continue	Connect Zero gas canister or Scrubber filter to sample inlet. (Channel 1 if scanner is installed.)
	Open Valve <Next> to Continue	Open Zero gas canister regulator if used.
	XXXX ppm R-XXX <Enter> to Adj	Refrigerant Zero concentration sensed.
	Locking Reading Please wait	Locks current reading.
	Refrigerant Zero XXXX ppm R-XXX	Press (+) increase reading or (-) to decrease displayed value to Zero.
	Starting Cal Please Wait	Monitor module preparing for Zero calibration.
	Successful Calibration	New Zero calibration values accepted.
	Cal Failed <Enter> to retry	Monitor unable to accept new zero value. Reverts back to previous Zero value.
Refrigerant Span <Enter> to CAL		Entry point to Refrigerant Span Calibration routine.
	Starting Cal Please Wait	Monitor module preparing for calibration. If scanner is installed, locks onto Channel 1.
	Connect Span Gas <Next> to Continue	Connect Span gas canister to Sample inlet (Channel 1 if scanner is installed)
	Open Valve <Next> to Continue	Open Span gas canister regulator.
	XXXX ppm R-XXX <Enter> to Adj	Actual Refrigerant Span concentration sensed.
	Locking Reading Please wait	Locks current reading.
	Refrigerant Span XXXX ppm R-XXX	Press (+) increase reading or (-) to decrease displayed Span value
	Starting Cal Please Wait	Monitor is adjusting calibration values.
	Successful Calibration	New Span calibration values accepted.
	Cal Failed <Enter> to retry	Monitor unable to accept new Span value. Reverts back to previous Span calibration value.
Press <Enter> to exit Cal		Exit Calibration Menu

Bold = Factory Default
** Added to CLD software version 2.0

Start-Up

Start-Up Sequence

The start-up diagnostic test for a single point unit and the start up diagnostic test for a scanner unit are two different tests. A single point unit must be configured as a single point unit (Channel Scanner Not Installed) and a scanner must be configured as a scanner (Channel Scanner Installed). The display will confirm if the unit is configured as a scanner by showing a channel number with the instrument read-out. The instrument runs the diagnostic test prior to allowing the operator to reconfigure the unit. Installing or not installing a scanner is an option only when the unit has just been powered up and in warm-up mode. Changes in this Settings Menu, if necessary, must be made at this point. The operator must then wait a minimum of eight seconds, power off and restart the unit to check that the change was stored in memory.

During start up and while the unit is performing the flow diagnostic test, the sample inlet(s) and exhausts should not be blocked or the unit will fail this test. Put a sample filter on each used and unused channel, so that on initial power up or a power failure, the scanner sees all channels open.

A unit that has failed a start-up diagnostic test will continue to display a flow loss error even if the problem that caused the unit to generate this error is corrected. To correct the problem, the unit must be powered off, restarted and successfully pass the appropriate flow diagnostic test to eliminate the flow loss error display.

A unit that has generated a flow loss error during normal operation will respond to the correction of the problem that caused the error and the error display will clear. A scanner unit may however take one scanner cycle to finally clear the error message. Check the READY LED on the right side of the main board for instantaneous indication of the instrument's status.

A single point unit will only generate a Bench Flow Loss. A scanner unit generate either a Bench Flow Loss error or a Scan Flow Loss error. Bench Flow Loss will take precedence over Scan Flow Loss in a scanner unit with both faults.

The bench pressure switch actually changes state during the diagnostic test and normal operation. **Shorting the terminals of this switch will NOT resolve the bench flow loss**. It will cause the unit to fail the start up diagnostic test or fail during normal operation. The scan pressure switch is required to switch during start-up once and remain closed during normal operation. **Do not short either of the pressure switches.**

The pressure switches measure the differential pressure across the two orifice restrictors (see Figure 9). There is no flow through the switch.

Bench Flow Loss

⚠ Caution:
Use care when handling tubes and fittings. The fittings are rigid and easily broken.

Single Point Units

Disconnect all inlet and exhaust tubing outside the monitor enclosure. This will isolate the problem to within the monitor or in the external tubing and filter(s).

The bench solenoid valves open and close every 3.5 seconds. Check for bubble activity at EXHAUST Port 2 as shown in Figure 10. Low flow or no flow at this port is most likely caused by a defective pump or saturated inline particle filter.

Check for bubble activity at EXHAUST Port 1. Flow will start and stop depending on if bench solenoid valves are open or closed. If flow does not completely stop, one or both of the bench valves are defective or the inlet fitting to the optical bench may be loose.

Use a voltmeter to measure the logic input from the pressure switch (negative lead to chassis, positive lead to black wire of SMP PRSS connector on left of main board). Set the range of the voltmeter to 0.00 (range hold auto-ranging voltmeters) and monitor the logic level switch every 3.5 seconds during normal operation.

A pressure switch that is always open may be the result of a defective pressure switch, loose tubing connecting to pressure switch or a clogged restrictor in the tubing.

A pressure switch that is always closed may be the result of a loose fitting to the inlet of the optical bench in addition to the same causes for a switch always open.

If the Bench Flow Loss error is the result of the unit failing the start-up diagnostic test, restart the unit while monitoring the logic input of the bench pressure switch. The result should match the bench pressure switch logic input as shown in Table 1.

A pressure switch that is not switching fast enough to follow the test sequence is most likely the result of deterioration in pressure switch performance but may be one of the reasons stated previously.

The fittings on the inline filter are glued and any attempt to remove or change the direction of the fittings will break the seal and/or crack the filter housing. A cracked filter fitting will not generate a Bench Flow Loss error in a single point unit. However, it will cause sample dilution. Replace the entire filter assembly if a problem is suspected.

A leak in the brass union fittings for the sample inlet or exhausts will not generate a Bench Flow Loss error, however, these fittings should be changed if a leak is suspected.

Reconnect all tubing when done. Use an end of line filter on each input line. Limit the length of tubing on any one port to 150 ft. (45.7m) (total length of sample and exhaust lines). Do not combine exhaust lines.

Table 1 - Single Point Unit Start-Up Diagnostic Routine

	Duration (Sec)	Bench Inlet Valve	Bench Outlet Valve	Bench Pressure Switch
Start Up Test	12	Closed	Closed	Open
	1	Open	Open	Closed
	1	Open	Closed	Open
	1	Open	Open	Closed
	1	Closed	Open	Open
Cycle repeats like this during Normal Operation	3.5	Open	Open	Closed
	3.5	Closed	Closed	Open
	3.5	Open	Open	Closed
	3.5	Closed	Closed	Open

Bench Flow Loss

⚠ Caution:
Use care when handling tubes and fittings. The fittings are rigid and easily broken.

Scanner Units

Disconnect all inlet and exhaust tubing outside the monitor enclosure.

Check flow at EXHAUST port 1 (see Figure 10). The bench valves cycle on and off every 3.5 seconds.

No or low flow at this port is most likely caused by a defective sample pump or saturated particle filter. It may also be caused by a defective scanner valve. Allow the channel scanner to scan all four lines to determine if low flow is associated with one or all of the scanner lines.

If the flow does not vary slightly between two different levels every 3.5 seconds, this could indicate a defective bench valve or a loose inlet fitting to the optical bench.

Use a voltmeter to measure the logic input from the pressure switch (negative lead to chassis, positive lead to black wire of SMP PRSS connector on left of main board). Set the range of the voltmeter to 0.00 (range hold auto-ranging voltmeters) and monitor the logic level switching every 3.5 seconds during normal operation.

A pressure switch that is always open may be the result of a defective pressure switch, loose tubing connecting to pressure switch or a clogged restrictor in the tubing.

A pressure switch that is always closed may be the result of a loose fitting to the inlet of the optical bench in addition to the same causes for a switch always open.

If the Bench Flow Loss error is the result of the unit failing the start up diagnostic test, restart the unit while monitoring the logic input of the bench pressure switch. The result should match the bench pressure switch logic input as shown in Table 2.

Table 2 - Scanner Unit Start-Up Diagnostic Routine

	Duration (Sec)	Scan Valve 1	Scan Valve 2	Scan Valve 3	Scan Valve 4	Bench Inlet Valve	Bench Outlet Valve	Bench Pressure Switch	Scanner Pressure Switch
Start Up Test	12	Scan	Scan	Scan	Scan	Closed	Closed	Open	Closed
	1	Sample	Scan	Scan	Scan	Open	Open	Closed	Closed
	1	Sample	Scan	Scan	Scan	Open	Closed	Open	Closed
	1	Sample	Scan	Scan	Scan	Open	Open	Closed	Closed
	1	Sample	Scan	Scan	Scan	Closed	Open	Open	Closed
	1	Sample	Scan	Scan	Scan	Open	Open	Closed	Closed
	1	Scan	Scan	Scan	Scan	Open	Open	Open	Closed
	1	Scan	Sample	Scan	Scan	Open	Open	Closed	Closed
	1	Scan	Scan	Scan	Sample	Open	Open	Open	Closed
	1	Scan	Scan	Sample	Scan	Open	Open	Closed	Closed
	1	Scan	Scan	Scan	Scan	Open	Open	Open	Closed
	1	Scan	Scan	Scan	Sample	Open	Open	Closed	Closed
	1	Scan	Scan	Scan	Scan	Open	Open	Open	Closed
	1	Sample	Sample	Sample	Sample	Open	Open	Closed	Open
Cycle repeats like this during Normal Operation	3.5	Sample	Scan	Scan	Scan	Open	Open	Closed	Closed
	3.5	Sample	Scan	Scan	Scan	Closed	Closed	Open	Closed
	3.5	Sample	Scan	Scan	Scan	Open	Open	Closed	Closed
	3.5	Sample	Scan	Scan	Scan	Closed	Closed	Open	Closed

Bench Flow Loss

⚠ Caution:
Use care when handling tubes and fittings. The fittings are rigid and easily broken.

The scanner manifold valves allow flow to the scanner pump when not energized (normally open port) and will be noted as Scan in Table 2 to indicate that flow from this line is directed to the scanner pump. The scanner manifold valves will redirect flow to the sample pump when energized (normally closed port) and will be noted as Sample in Table 2 to indicate that flow from this line is directed to the sample pump.

A pressure switch that is not switching fast enough to follow the previous test sequence is most likely the result of deterioration in pressure switch performance but may be due to one of the reasons stated earlier.

The fittings on the inline filter are glued and any attempt to remove or change the direction of the fittings will break the seal and/or crack the filter housing. A cracked filter fitting will cause a scanner unit to fail a diagnostic start up test and generate a Bench Flow Loss error. Replace the entire filter assembly if a problem is suspected.

A leak in the scanner manifold valves or the fittings on that block will cause the unit to fail a start up diagnostic test and the generation of a flow fail error. A leak to the sample side will cause a bench flow loss error and a leak to the scanner side will cause a scanner flow loss error. Any leak in solenoids or fittings and tubing leading to the sample pump will cause a bench flow loss. If a problem is suspected with the scanner manifold/valves, the entire assembly should be replaced.

A leak in the brass union fittings for the sample inlet or exhausts will not generate a Bench Flow Loss error, however, these fittings should be changed if suspected of leaking.

Reconnect all tubing when done. Use an end of line filter on each input line. Limit the length of tubing on any one port to 150 ft. (45.7m) (total length of sample, and exhaust lines). **Do not** combine exhaust lines.

Figure 8 - Scanner Assembly

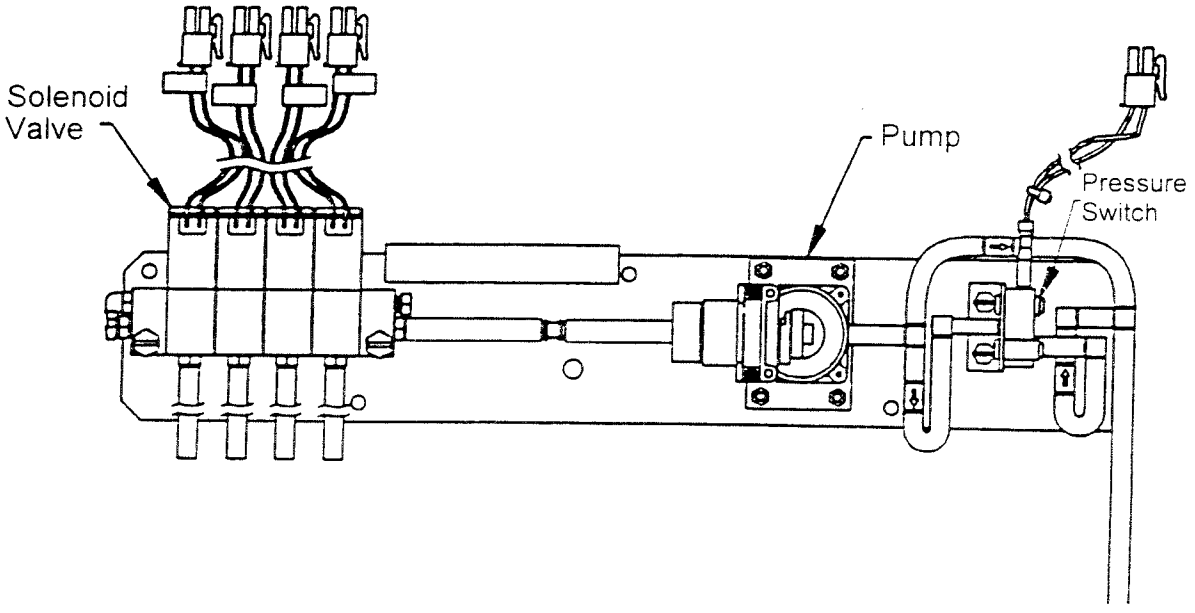

Scan Flow Loss

⚠ Caution:
Use care when handling tubes and fittings. The fittings are rigid and easily broken.

Scanner Unit

Disconnect all inlet and exhaust tubing outside the monitor enclosure.

During normal operation, the scan pressure switch is closed. Check flow at EXHAUST port 2 (see Figure 10). Low or no flow indicates a defective scanner pump. If the flow is sufficient, use a voltmeter to test the logic input of the scan pressure switch (negative lead to chassis, positive lead to black wire of SCN PRSS connector on left of main board). Set the range of the voltmeter to 0.00 (range hold auto-ranging voltmeters). This should remain **closed** during normal operation. If there is flow but the switch is open, the probable cause is a defective switch, loose tubing to the switch or clogged restrictor in the tubing leading to the pressure switch ports.

The scan flow switch is tested only once during the diagnostic test. It remains closed during normal operation. If the unit generates a Scan Flow Loss error as a result of failing the diagnostic test, monitor the output at EXHAUST port 2 (see Figure 10). Restart the unit and about 25 seconds into the diagnostic test, the flow should dip to zero for one second and the scanner pressure switch should open (check logic input of scanner pressure switch in Table 2). If the flow does not cease entirely for that one second, there is a leak in the scanner valve assembly and/or the fittings and tubing between that assembly and the scanner pump. If the flow does actually drop to zero but the pressure switch does not respond, then look for a defective pressure switch, loose tubing and/or clogged restrictor to the switch.

Reconnect all tubing when done. Use an end of line filter on each input line. Limit the length of tubing on any one port to 150 ft. (45.7m) (total length of sample and exhaust lines). Do not combine exhaust lines.

Instrument Flow Diagram

Figure 9 Single Channel Monitor

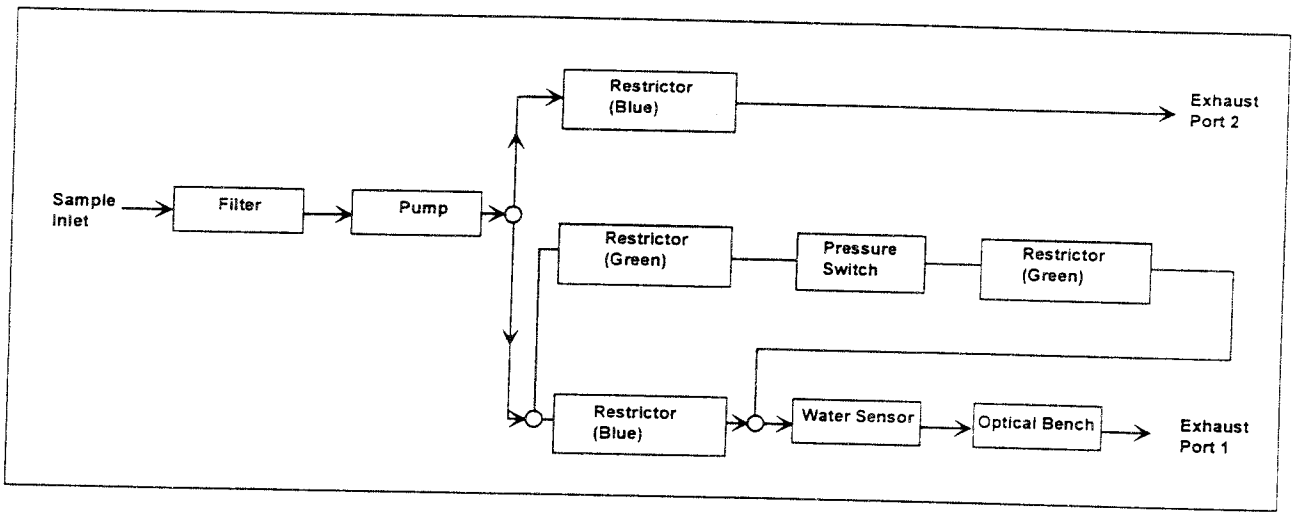

Monitor with 4 Channel Scanner

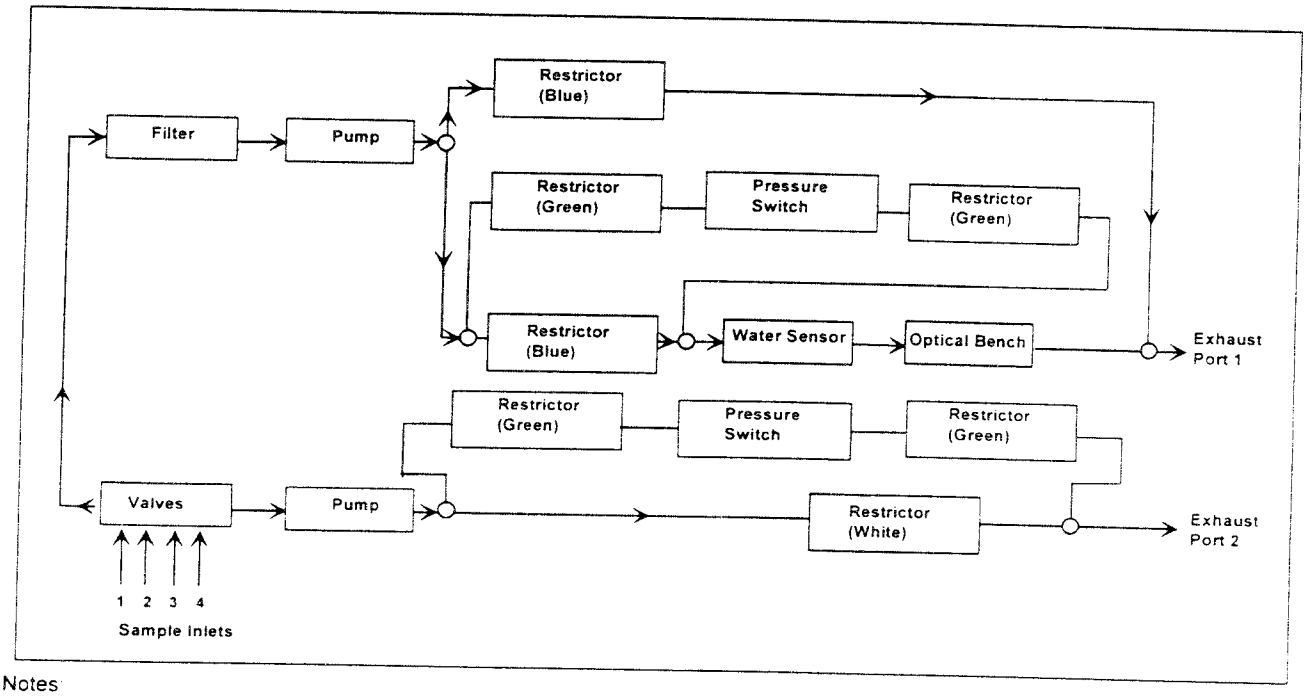

Notes:

1. Restrictor Orifice Diameter by Color Code
   Green = 0.007"
   Blue = 0.020"
   White = 0.030"
2. Arrow on restrictor indicates flow direction

Module Diagnostic Messages

Display:	Communication Lost With Module
Description:	The clear language display (CLD), or UCP2 if no CLD is used, is not communicating with the monitor.
How does it affect unit operation:	Monitor will continue to operate in the READY mode. Alarm condition outputs will continue to be energized if ppm readings exceed setpoints. LED's on monitor will display correctly. This diagnostic does NOT cause the monitor to enter a Trouble Status condition. You can scroll through the CLD or UCP2 menu items and see the ppm readings for the data last collected before communication failure. The CLD may even read *READY* if that was the operating condition before the communication failure.
What causes the diagnostic:	The diagnostic is the result of a loss of communication with either the CLD or UCP2. In both cases the communication transfer is via wires connected to J15, terminals 1 and 2.
How to troubleshoot:	Check to be sure the wires are in place at the monitor and CLD, or UCP2. The connection points are J15, terminals 1 and 2. **Can not connect to both CUP2 and CLD.** If using twisted pair to the UCP2, be sure the cable shield is grounded at the UCP2. Check to be sure the connector and its screws are secure, at the monitor and CLD or UCP2. **Note:** Control is from UCP2 or Human Interface on the monitor but not both.
What components to test:	Clear Language Display Wiring - as described

Display:	**Trouble** (plus diagnostic message or channel data)
Description:	Malfunction of the monitor diagnosed by internal operational checks.
How does it affect unit operation:	Any diagnostic listed below causes the monitor to enter a *Trouble* Status condition. There are two levels of *Trouble*. Major, are those conditions that may result in inaccurate data collection. Minor, are those that are informational in nature but do NOT affect the accuracy of sample data measurements. A Major *Trouble* condition will result in turning On the red trouble LED, the Trouble relay switching, and the Clear Language Display (CLD) will flash when at the operating mode menu. Optional unit mounted alarm will sound if it was installed and if it is programmed. It can be quieted by pressing the + key (plus key). This optional alarm will NOT sound with Version 1.0 monitor software. A Minor *Trouble* condition will NOT turn on the red LED, sample measurements will continue, alarm conditions will be output. The CLD will flash trouble status but indicate *READY* mode, the green LED will indicate the same. Reset - If a Major diagnostic occurs during start-up, the unit must be turned OFF to reset after fixing the problem. Minor diagnostics will clear even if they occur during startup. If the diagnostic occurs during the Normal mode of operation then repair of the failure cause will reset the red LED and trouble relay, followed by the clearing of the CLD within 2 minutes. Refrigerant level alarms are disabled during Major *Trouble* diagnostic. Bench sampling and read-out continues during the *Trouble* condition
What causes the diagnostic:	Any of the following diagnostics put the monitor in this status condition. Major: RAM Loss, IR Source Fail, Chopper Fail, Temp Sensor Fail, Bench Flow Loss, Scan Flow Loss, Out Of Temp Rng, Rfgt Lvl to Low Minor: Aux Input Fail, Ext Reset Fail
How to troubleshoot:	See the individual diagnostics
What components to test:	See the individual diagnostics

Module Diagnostic Messages

Display:	RAM Loss
Description:	The monitor module has lost the data in its battery backed RAM.
How does it affect unit operation:	This diagnostic causes the monitor to enter a Major *Trouble* status condition. Monitor operation will be severely affected.
What causes the diagnostic:	The diagnostic occurs if the RAM information has been changed. *RAM loss* diagnostic occurs for one of two reasons: Could occur after programming the calibration coefficients into the memory through the factory setup menu. It could also occur in the event of RAM loss (possibly due to a battery failure on the main board).
How to troubleshoot:	Cycle power off, then back on to see if the message clears. After it clears a calibration should be performed to confirm accuracy. If calibration has deviated significantly, then one of the coefficients has probably changed and there would probably be other machine problems occurring. With the *RAM loss* condition, several of the menu items will be scrambled and not make sense.
What components to test:	Battery cannot be changed, monitor chassis assembly must be replaced.

Display:	IR Source Fail
Description:	The infra-red optical source has failed.
How does it affect unit operation:	This diagnostic causes the monitor to enter a Major *Trouble* status condition. The monitor operation will be severely affected. After power up, monitor will NOT cycle through start-up in its normal sequence. May display *Communication Lost With Module* on start-up. Sample reading may vary in the presence of refrigerant, but will NOT be accurate. Will reset without cycling power, even when problem occurs on start-up.
What causes the diagnostic:	Failure of the bench source light.
How to troubleshoot:	Cycle power off, then back on to see if the message clears. Check the resistance of the light source, wires located at the top of the bench near the motor. Label on the board is "Source". Resistance should be about 5 ohms across the light. If the resistance is significantly higher, i.e. 1K ohms, then the light has failed. Check the power at the Source terminals, one of the two terminals should read nominally 5.0 Vdc to ground.
What components to test:	Check unit circuit board wiring to source, near top of bench. Light cannot be changed, monitor chassis assembly must be replaced.

Display:	Chopper Fail
Description:	The optical Bench photo interrupter has failed.
How does it affect unit operation:	This diagnostic causes the monitor to enter a Major *Trouble* status condition The monitor will display ppm but accuracy is affected. Will reset without cycling power, even when problem occurs on start-up.
What causes the diagnostic:	When the chopper blade stops or slows this diagnostic occurs
How to troubleshoot:	Chopper blade is fragile. When turned by hand, it is normally very resistant to rotation. It does NOT spin freely. Check wiring to the chopper motor. Listen for a bent chopper blade that might be rubbing
What components to test:	None Chopper motor, bench and printed circuit board must all be replaced as an assembly

Module Diagnostic Messages

Display:	Temp Sensor Fail
Description:	The bench temperature sensor has failed.
How does it affect unit operation:	This diagnostic causes the monitor to enter a Major *Trouble* status condition When viewing the Status Menu, the bench temperature will be blank. The monitor will display ppm but accuracy is affected because the temperature sensor determines how much heat to add to the bench. Will reset without cycling power, even when problem occurs on start-up.
What causes the diagnostic:	Failure of the bench temperature sensor, located on the upper right of the bench.
How to troubleshoot:	Check the wiring to the sensor, located at the upper right corner of the bench assembly, terminal labeled "Temp"
What components to test:	Check the resistance of the temperature sensor, after unplugging from the board: Red to Black = 7.5 Meg Ohms Red to Green = 7.5 Meg Ohms Black to Green = 40 K Ohms From top to bottom: Red, Black, Green

Display:	Scan Flow Loss
Description:	Flow loss through the bypass circuit of the scanner.
How does it affect unit operation:	This diagnostic causes the monitor to enter a Major *Trouble* Status condition. Bench sampling and read-out continue during the trouble condition, but accuracy could be affected due to flow problem.
What causes the diagnostic:	The diagnostic is the direct result of the incorrect signal being received from the scanner pressure switch. The scanner pressure switch simply reacts to the flow through the scanner bypass circuit by measuring the pressure drop across a restrictor in the hose. The switch makes and breaks as the flow changes. Pressure switch set-points are non-adjustable. There is an adjustment screw, but adjustment is NOT recommended. The switch contacts are normally open, and close above a pressure of 1.0 +/- 0.2 (0.8 to 1.2) inches water column. They will open again as the pressure drops below 0.5 inches water column. Normal scanner flow involves the scanner pump supplying a constant supply of sample air, plus the switching of the four scanner sequencer valves. Normal operation results in a constant flow to the exhaust port from three of the four inlets, bypassing the bench. During the start-up scanner flow sequence is not the same. Refer to the table representing the start-up sequence. You will find a one second period just before normal operation begins where all four scanner sequencer valves are directing flow to the bench which result in no flow at the scanner pressure switch. Therefore, simply jumpering the switch results in a scanner flow loss if the machine goes through startup.
How to troubleshoot:	Check components involved. Using voltmeter confirm 5.0 vdc to ground on black wire at the switch. With voltmeter on red wire and ground note cycling of switch during the one second cycle at startup. Then it should remain closed throughout the normal operation. Programming - If the monitor programming is set for a single channel with a scanner installed or vice-versa *Bench Flow Loss* will be indicated.
What components to test:	Wiring - verify that the pressure switch is connected to SCN PRSS terminal Leaks - especially on scanner units where the diagnostic has occurred on start-up Pressure switch; Pump; Hoses and Restrictors; Filters Four Channel Sequencer valves - four channel scanner units only

Module Diagnostic Messages

Display:	Out of Temp Rng
Description:	The refrigerant monitor is out of the temperature range where it can measure refrigerant.
How does it affect unit operation:	This diagnostic causes the monitor to enter a Major *Trouble* status condition. If heater is disconnected or not working, the monitor will continuously stay in warm-up. The monitor will display ppm but accuracy is affected. Will reset without cycling power, even when problem occurs on start-up.
How to troubleshoot:	Troubleshoot the same as *Temp Sensor Fail*
What components to test:	None

Display:	Rfgt Lvl Too Low
Description:	The displayed refrigerant level is less that -4 ppm
How does it affect unit operation:	This diagnostic causes the monitor to enter a Major *Trouble* status condition. The monitor will display ppm but accuracy should be questioned. Will reset without cycling power, even when problem occurs on start-up
What causes the diagnostic:	When monitor displays a level less than -4 ppm
How to troubleshoot:	Vibration: Fluctuating readings from -200 to 0 have been observed. Remove the monitor from its location to verify vibration caused the diagnostic. Other vibration sources should also be investigated. Electrical radiated noise: Disconnect outputs and use an extension cord power supply from an alternate source to see if the noise source can be isolated. Look for intercoms, walkie talkies, switchgear, etc.

Display:	Rfgt Mon Fail
Description:	Severe problem with monitor.
How does it affect unit operation:	This diagnostic causes the monitor to enter a Major *Trouble* status condition. The monitor will display ppm but accuracy is affected. Will reset without cycling power, even when problem occurs on start-up.
What components to test:	None

Display:	Aux Input Fail
Description:	Auxiliary Input is not functioning.
How does it affect unit operation:	This diagnostic causes the monitor to enter a Minor *Trouble* status condition. The monitor will display ppm. Will reset without cycling power, even when problem occurs on start-up.
How to troubleshoot:	Uninstall Auxiliary input if one doesn't exist.
What components to test:	Check Auxiliary input wires.

Module Diagnostic Messages

Display:	Bench Flow Loss
Description:	Flow loss to the optical bench.
How does it affect unit operation:	This diagnostic causes the monitor to enter a *Trouble* Status condition. Bench sampling and read-out continue during the trouble condition, but accuracy could be affected due to flow problem. If Scan Flow Loss is also detected it will not be displayed until this condition has cleared.
What causes the diagnostic:	The diagnostic is the direct result of the incorrect signal being received from the bench pressure switch. The bench pressure switch simply reacts to the sample flow through the bench by measuring the pressure drop across a restrictor in the hose. The switch makes and breaks as the flow cycles. Pressure switch set-points are non-adjustable. There is an adjustment screw, but adjustment is NOT recommended. The switch contacts are normally open, and close above a pressure of 1.0 +/- 0.2 (0.8 to 1.2) inches water column. They will open again as the pressure drops below 0.5 inches water column. Normal bench flow involves the bench pump supplying a constant supply of sample air, plus the bench inlet and outlet solenoids opening and closing. Normal operation results in a constant flow to the exhaust port, bypassing the bench, plus a 3.5 second flow, and 3.5 seconds no flow through the bench itself. During the start-up bench flow sequence is not the same. Also, this sequence varies for a scanner or single channel monitor. Refer to Table 1 for single point units and Table 2 for scanner units start-up sequence for both units.
How to troubleshoot:	Check components involved. Using voltmeter confirm 5.0 vdc to ground on black wire at the switch. With voltmeter on red wire and ground note cycling of switch in 3.5 second intervals, open - closed - open... At the same time as you are watching the switch action, using a glass of water watch for the flow - no flow - flow cycling from the hose leaving the bench by observing the bubble activity. On single circuit machines this can be checked at exhaust port one. Four channel units require disassembling the hose at exhaust port one to separate the bench hose. Programming - If the monitor programming is set for a single channel with a scanner installed or vice-versa *Bench Flow Loss* will be indicated. Refer to the Bench Flow Loss section of this guide.
What components to test:	Wiring - verify that the pressure switch is connected to SMP terminal Leaks - especially on scanner units where the diagnostic has occurred on start-up. Pay particular attention to the hose from the four sequencer valves to the bench pump. Pressure switch; Pump; Hoses and Restrictors; Filters Four Channel Sequencer valves - four channel scanner units only

Display:	Ext Reset Fail
Description:	The external reset switch has failed or the jumper is missing.
How does it affect unit operation:	This diagnostic causes the monitor to enter a Minor *Trouble* Status condition,. All latching alarms will act as non-latching. Bench sampling, readout, and alarms continue during this trouble condition. The internal red LED labeled trouble is NOT turned on because the monitor remains in the *READY* mode.
What causes the diagnostic:	The diagnostic is the direct result of the incorrect signal being received from the INPUT terminals. The correct signal is provided by a normally closed contact or jumper wire.
How to troubleshoot:	Check to be sure the jumper wire is in place if no external reset switch has been installed. The connection points are J16, terminals 1 and 2. Check to be sure the connector and its screws are secure. If an external switch is installed, using voltmeter confirm that the resistance across these terminals is zero.
What components to test:	Wiring - check as above External reset switch (normally closed switch), not provided by Trane

Quick Problem Checks

A. Bench flow loss - Check installation to be sure all lines are open at the bottom of the panel. In this order:

1. Inspect switches and tubing for kinks and cracks.

2a. Bench pressure switch will open and close during normal operation. 0 and 5 volts d.c. (switching) will be seen on a voltmeter by placing leads on the terminals of the pressure switch.

2b. Scanner pressure switch (scanner unit only) must be closed all the time.

3. Are the restrictors installed in the right direction? Arrow indicates flow. See Figure 9 for details.

4. After switches and tubing are checked. look at the pump. Rotate to insure the crank is not rubbing anywhere.

5. Remove cover from bench and listen for solenoid activity. Should be switching Open / Close during a 7 second cycle.

6. Using a glass of water, observe the bubble activity at the exhaust ports (see Figure 10). Port 1 should be cycling on / off, Port 2 should be nearly constant. (Single point monitor only.)

7. Is the monitor programmed properly, check if scanner is installed, or not. Then re-start.

Notes: Bench Flow Loss display does not clear the display immediately, but it does clear itself after two minutes. If in doubt as to whether or not the condition has cleared, observe the LED trouble light on the circuit board. It will turn off immediately after the problem has cleared.

Figure 10 - Measuring bubble activity, see step 6.

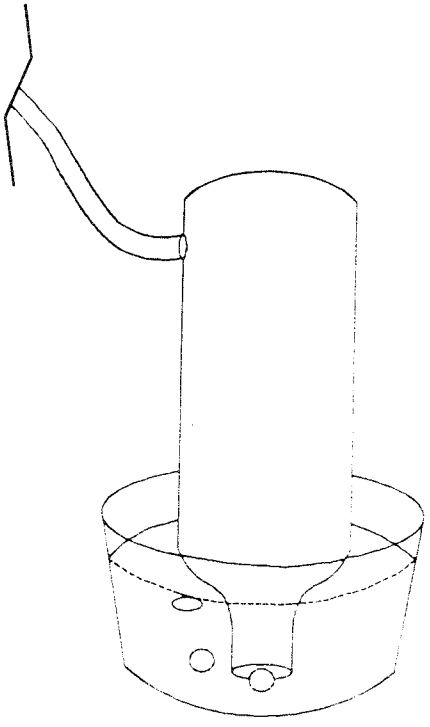

Quick Problem Checks

If a bench flow loss condition occurs during start-up (warm-up) it will be necessary to power-down and restart the monitor to clear the diagnostic.

Bench flow loss will occur on a four channel monitor programmed for single channel operation because the four scanner channels are all blocking airflow to the bench circuit. To avoid this problem, program properly or remove the bench circuit inlet tube from the left side of the four solenoids.

Check bench flow problems by measuring flow through the bench circuit. During the 3.5 second cycle, flow can be grossly checked with use of a bottle cap (approximately 1-1/8 inch diameter), or a soda bottle (approximately 3/4 inch diameter). The following bubble rates per 3.5 second cycle can be expected:

	Flow Loss	Normal Flow
Bottle Cap	2	6
Bottle	4	8

See Figure 10.

B. Refrigerant level too low - If the output is erratic and bounces from a low reading to a normal reading, suspect problems resulting from either vibration or radiated electrical noise. See **Module Diagnostic Messages** for further information.

C. Refrigerant Conversion - The monitor can not be converted from one refrigerant to another in the field - it must be sent back to the factory for recalibration.

D. Diagnostic Conditions - Any diagnostic condition causes a "Trouble Status" condition on the monitor. The Trouble relay closes and the front display flashes when at the Operating Mode menu. Optional unit mounted alarm will sound if it is installed and programmed. Pressing the "+" key will quiet the alarm. Refrigerant level alarms are disabled. Bench sampling and readout continue during the trouble condition.

Table 3 - Diagnostic Relay Conditions

Condition	Normally Open Contacts	Normally Closed Contacts
Off	Open	Closed
On - Ready	Closed	Open
Trouble	Open	Closed

Calibration Procedure

Introduction

This section details the recommended field calibration check procedure for the Trane Model RMWD refrigerant monitor. The monitor is factory calibrated for the specific refrigerant desired however, it is recommended that the calibration be checked annually at a minimum, and a log kept detailing any adjustments required. The appropriate Installation, Operation and Maintenance manuals for this instrument should be referenced to assist in operating the display and identifying components or connection points.

General Information

- Kit TOL 0170 includes:
  - regulator
  - span gas scrubber (FLR 1404)
  - zero scrubber (FLR 1403)
  - connecting tubing and fittings
  - carrying case and instructions (calibration gas **is not** included)
- Calibration gas -
  - R-11: TOL 0171
  - R-22: TOL 0172
  - R-123: TOL 0173
  - R-134A: TOL 0174
  - zero gas: TOL 0175

The RMWD test regulator releases just over 2.0 liters per minute. A 100 liter bottle would last about 50 minutes.

The used calibration gas canisters and the various filters are not considered hazardous waste due to the small concentration of refrigerant. If a large number of canisters or filters were being dumped, this might be an issue and require further investigation. Local codes apply.

Calibration Procedure

Material Required

1. Trane Calibration Kit containing:
   - Zero Gas Scrubber
   - Flow Regulator
   - Interconnecting Tubing and Fittings
   - Span Gas Scrubber
   - Carrying Case
2. A canister of the specific refrigerant span gas

Ths calibration check should be performed only by qualified personnel familiar with the instrument and its operation.

⚠ Warning!
During the calibration procedure, the monitor is not in service and any alarms that may occur during the calibration sequence will not be recognized. This could create a hazardous condition.

Preparing for Calibration

1. Ensure the area surrounding the monitor is free from any gas hazard. Operate permanent or portable ventilation as necessary.
2. Access the calibration menu using the display located on the unit front panel. See the Installation, Operation and Maintenance manual for details on the use of the monitor's various menus.
3. Page through the display by pressing <Next> until you get to the "Calibration" main menu. Press <Enter> to begin calibration check routine.
4. Enter the Field Calibration password, " - + - - + + ".
5. The monitor will go into the Monitor Check Mode and the refrigerant concentration based on the current unit calibration will be displayed. All new alarms will not be recognized.
6. Remove the gas sampling tube from the monitor sample inlet. Disconnect sample channel #1 if a scanner is installed.

Zero Calibration Check

1. The first routine is used to check the unit Zero calibration. Press <Next> to proceed to the Refrigerant Zero screen. Press <Enter> to begin Zero Calibration. The display will read "Starting Cal, Please Wait". If a channel scanner is installed, it will be locked onto channel #1. Refer to Figure 11 for connection information.

Note: Either a Zero Gas Scrubber or a canister of Zero gas can be used to check the zero setting on a Model RMWD monitor.

2. When the "Connect Zero Gas" screen is displayed, connect the Zero Gas Scrubber or the Zero Gas Canister to the (continued) sample port on the monitor as shown in Figure 11. Use sample port #1 if a scanner is installed. Press <Next> to continue.

⚠ Caution:
Be sure Zero Scrubber is used and not Span Gas Scrubber.

Note: If a Zero Gas canister is used, connect as shown in Figure 11 except substitute Zero canister for Span Gas canister. A Span Gas scrubber must be used whenever pressure gas is applied to the unit to avoid over pressurization.

Calibration Procedure

3. "Open Valve" will be displayed. If the Zero gas canister is used, open the regulator to allow gas to flow. If a scrubber is being used, disregard this step. Press <Next> to continue to Step 4.

4. The next screen will display the sample concentration based on the current unit calibration. After waiting at least three minutes, press <Enter> to adjust zero setting. If reading is zero, press <Cancel> twice to exit Zero calibration routine and move to Refrigerant Span routine.

5. If <Enter> was pressed to adjust, the unit will lock onto the reading. Use the (+) and (-) keys to adjust displayed reading to zero. Press <Enter> when finished. Monitor will store new Zero setting.

6. Either "Successful Calibration" or "Cal Failed" will be displayed. If calibration was successful, the display will proceed to the Span Calibration. If calibration failed, the unit will revert back to the previous zero value. Press <Enter> to repeat Zero Calibration. Shut off Zero Gas flow if canister is being used.

Refrigerant Span Calibration Check

1. At the "Refrigerant Span" screen, press <Enter> to Calibrate. The display will read "Starting Cal Please Wait". Refer to Figure 12 for connection information.

2. Connect the Span Gas canister to Sample Port #1 when the display prompts you to do so. Also, remove any caps on the span gas scrubber. Press <Next> to continue.

3. Open the regulator valve when instructed and press <Next> to continue.

4. After at least three minutes and the displayed value is stable, compare the displayed PPM value to what is listed on the calibration span gas canister. If the displayed value differs from the value on the canister, press (+) or (-) to change the displayed value to match to match the calibration gas value. Press <Enter> to continue. The display will read "Starting Cal".

Calibration Procedure

5. Either "Successful Calibration" or "Cal Failed" will be displayed. If the calibration was successful, the new span values have been stored and will be used for all future readings. Press <Next> three times then <Enter> to return the instrument to operation. If the Calibration failed, the monitor will revert back to the values previously stored. Press <Enter> to retry span calibration.
6. Disconnect the span gas canister and connect all sample lines that may have been removed. Unit is ready to be put back into service.
7. Log the date and note any adjustments made on a monitor calibration log.
8. Return all parts to the Calibration Kit carrying case.

Figure 11 - Zero Calibaration Check Connections

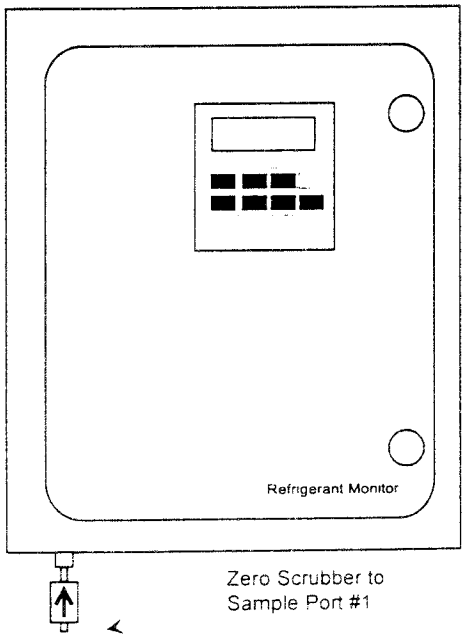

Figure 12 - Span Calibration Check Connections

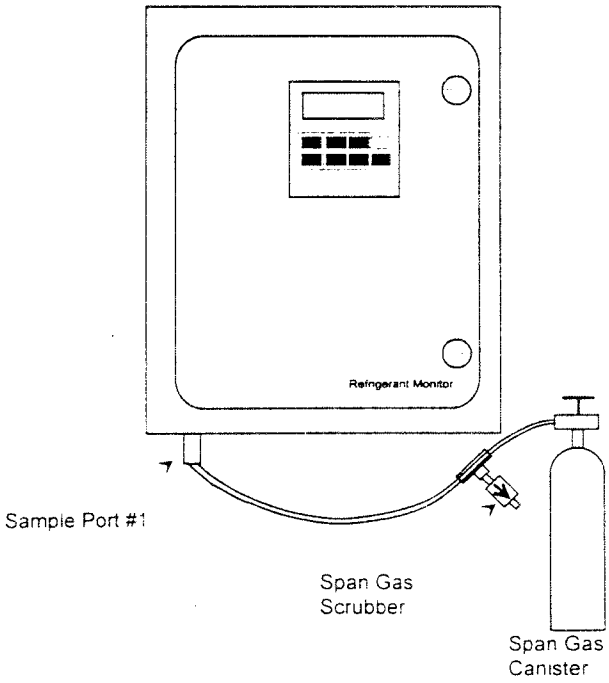

Note: If Zero Gas is used, connect canister to Sample Port #1 using connect arrangement similar to what is shown in Figure (Span), substituting the Zero Canister for the Span Canister and the Zero Scrubber for Span Gas Scrubber.

Pressure Switch Checkout

Testing Procedure

Equipment

- Pressure Gauge 0 - 3 inches H_20 range
- Pressure Source
- Ohm Meter
- Tubing Harness shown below

Setup

See Figure 13

Procedure

1. Connect tubing to high pressure port of switch.
2. Use syringe to vary pressure in range of 0 - 3.0 inches H_20 four times.
3. Return pressure to zero.
4. Gradually apply pressure until ohm meter indicates closure of switch.
5. Note pressure that is required to generate closure. Pressure must be > 0.8 inches H_20 open and < 1.2 inches H_20 closed.
6. Increase pressure to 2.0 inches H_20.
   Note: Contact resistance at 2 inches H_20 is <= 50 ohms.
7. Reject a switch which does not meet specifications in steps 5 and 6.

Figure 13 - Pressure Switch Testing Equipment

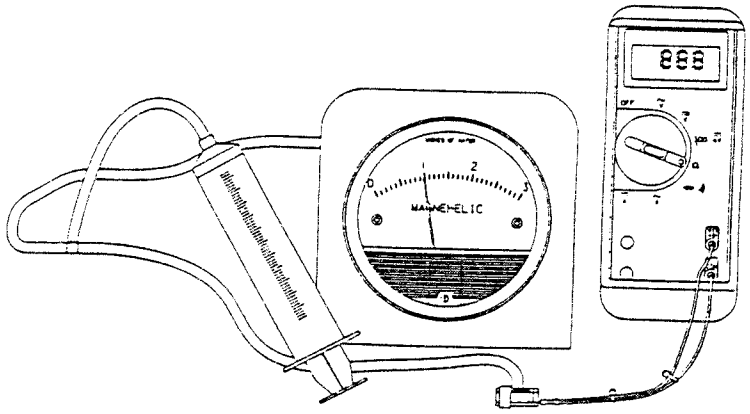

Figure 14 - Pump clearances

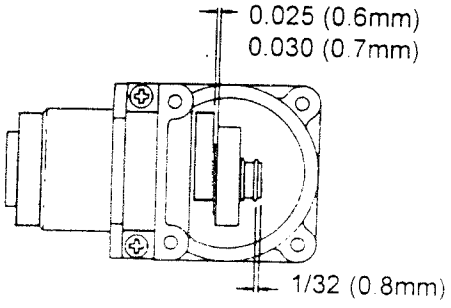

Technical Specifications

Mechanical

Enclosure

NEMA-4 rated. Hinged door with 2 quarter-turn latches. Beige with black face plate.

Mounting

4 mounting tabs provided on back of enclosure.

Weight

Single channel unit = 42 lbs. operating, 45 lbs. shipping. 4-channel scanner unit= 45 lbs. operating, 49 lbs. shipping.

Sample Pumping Rate

0.75 LPM minimum with 150 feet of 1/8" ID sample tubing.

Electrical

Inputs

Power Input - The refrigerant monitor will operate from a source of AC power of 100 VAC to 240 VAC, 50 to 60 Hz. Power input not to exceed 80 watts in single channel operation.

Auxiliary Input - 4 to 20 mA Input referenced to ground. Input impedance is 200 (± 4) Ω resistive.

Remote Reset - An input will be provided to remotely reset latched alarm relay(s). On activation, all latched alarms will be reset. Maximum distance from monitor to contacts is 300 feet using shielded 18 AWG twisted pair wire.

Outputs

Analog - Two analog outputs are provided to indicate refrigerant gas concentration. These outputs may be used independently and simultaneously.

Ranging for both outputs is common.

Ranges selectable by software:
0 to 100 PPM
0 to 1000 PPM

The resolution on each range is 1 PPM.

4 to 20 mA: Sourcing current to module ground. Load = 200 ohms maximum.

0 to 10 VDC: Sourcing referenced to module ground. Output current to 7 mA maximum.

Relays - Relay contact ratings are as follows:

Resistive load:
-7.2 Amps @120 VAC
-5.0 Amps @240 VAC

Inductive load:
-2.88 Amps Pilot Duty
-1/3 HP, 7.2 FLA, 43.2 LRA

Audible alarm output:
12 VDC, 100Ω load maximum

Gas Sensing Characteristics

Gas Sensitivity

Standard factory calibration for HCFC-123, CFC-11, HCFC-22 and HFC-134a. Special factory calibrations for other refrigerants are available.

Alarm levels

Alarm levels are software adjustable in steps of 1 PPM over the following ranges:

Alarm Levels:

HCFC-123	Low Limit	High Limit
Alarm Level #1	3 PPM	Lowest of 30 PPM or Alarm Level #2 -1
Alarm Level #2	Alarm Level #1 + 1	Alarm Level #3 - 1
Alarm Level #3	Alarm Level #2 +1	1000 PPM

All other refrigerants	Low Limit	High Limit
Alarm Level #1	3 PPM	Alarm Level #2 -1
Alarm Level #2	Alarm Level #1 + 1	Alarm Level #3 - 1
Alarm Level #3	Alarm Level #2 +1	1000 PPM

Technical Specifications

Factory Default Values Are:

Accuracy Rating

Refrigerant	Level 1	Level 2	Level 3
HCFC-123	30	90	300
CFC-11, HCFC-22, HFC-134a, CFC-12, CFC-113, CFC-114, CFC-500, CFC-502	30	90	1000
Ammonia	10	25	50

Note: These are the current recommended alarm level values at the time of printing. They can be easily adjusted as required.

Precision - Accuracy depends upon both precision and calibration standard accuracy. For negligible effect, calibration standard inaccuracy must be less than 1/10 precision inaccuracy.

0- 50 PPM = ± 1 PPM

51-1000 PPM= ± 10% of reading

Reference Operating Conditions:
Ambient Temperature = 23 ± 10°C
Atmospheric Pressure = 28.5 ± 2 in. Hg
Relative Humidity = 50 ± 20%
Line Voltage = 120 VAC

Calibration Standards:
Reproducibility - The reproducibility over a 12 month period will be within ± 1 PPM In the range 0 - 50 PPM under reference operating conditions.

Response Time

90% of a step change in 75 second maximum (at analyzer input). There is an additional transport time of 30 seconds with 150 foot of 1/8" tubing at a flow of 0.75 LPM. Additional scanner dwell time = 30 seconds per point. If a reading is observed greater than the threshold value, the scanner will dwell at that point for an additional 60 seconds.

Repeatability

Zero stability due to ambient, ±1 PPM with a maximum temperature change of 2.78°C per hour.

Linearity

0 to 100 PPM: linear

100 to 1000 PPM: ± 2% of full scale reading

Noise immunity

± 1 PPM with a zero gas filter attached.

Warmup Time

2 hours maximum (20 minutes typical)

Environmental

Temperature range

Operating: 0°C - 50°C
Temperature effect within this range is ± 0.3% of reading per °C.

Non operating: -10 to 60°C

Humidity

Operating and non operating; 5 to 95% R.H. Non condensing, over the operating temperature range.

Pressure

Operating: 10.2 PSIA to 15.66 PSIA

Non operating:
2.17 PSIA to 15.66 PSIA

Agency Listing

This refrigerant monitor is listed under the UL 2075 performance standard. UL has also tested and verified the monitor to CSA standard C22.2 #205. The ammonia unit has not been investigated by UL and is not covered under this listing.

LITERATURE FILE NO. CTV-SG-2

COMPRESSOR DISASSEMBLY A, B, C AND D DESIGN SEQUENCE

SECTION 8.2

JULY 1984

This section describes disassembly of the Model CVHE CenTraVac compressor. The procedures given may be used for compressor in the 013 through 125 size range with certain variations. For a list of tools required, see Section 9.1 of this Service Guide.

Disassembly

WARNING: BEFORE WORKING ON THIS OR ANY ELECTRICAL EQUIPMENT, ALWAYS DISCONNECT THE ELECTRIC POWER SUPPLY. FAILURE TO DO SO MAY RESULT IN SERIOUS PERSONAL INJURY OR DEATH FROM ELECTRIC SHOCK.

1. Disconnect all electric power. Before starting disassembly it is first necessary to remove all the refrigerant from the chiller. After the refrigerant has been removed, evacuate the chiller to 4mm Hg to remove all refrigerant vapor. After the chiller has been evacuated, pressurize the chiller with dry nitrogen until the evaporator pressure gauge reads 0 psi. See Figures 1, 2 and 3.

WARNING: USE ONLY DRY NITROGEN WHEN PRESSURIZING THE CHILLER. THE USE OF OXYGEN OR ACETYLENE MAY CAUSE A VIOLENT EXPLOSION RESULTING IN SERIOUS PERSONAL INJURY OR DEATH.

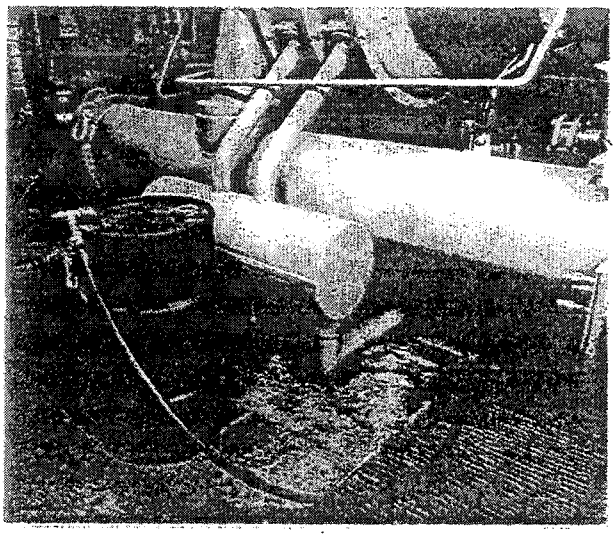

FIGURE 1 - Removing Refrigerant

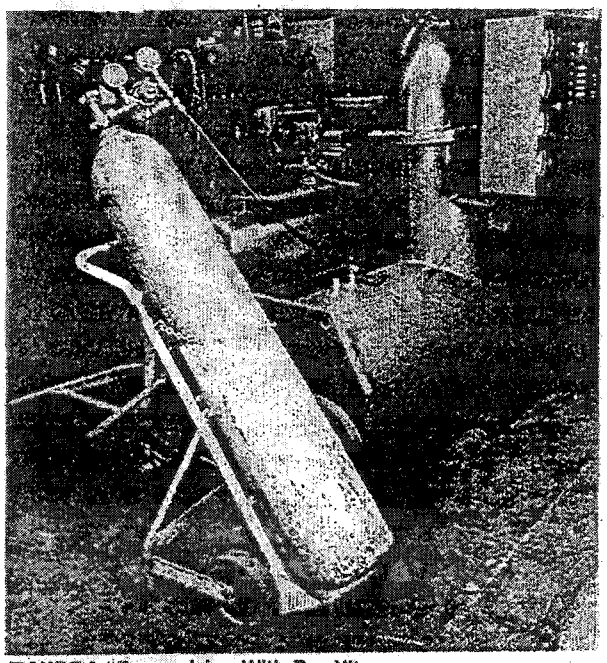

FIGURE 2 - Pressurizing With Dry Nitrogen

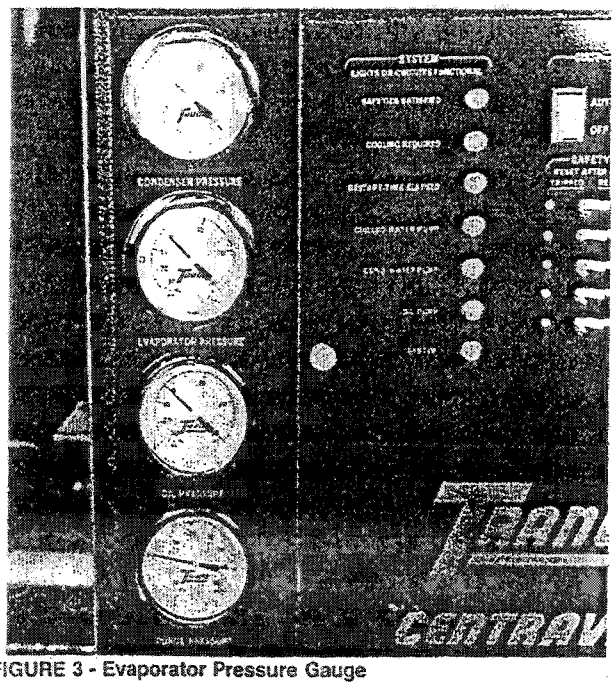

FIGURE 3 - Evaporator Pressure Gauge

© THE TRANE COMPANY 1984
COMMERCIAL SYSTEMS GROUP
LA CROSSE, WISCONSIN 54601-7599
PRINTED IN U.S.A.

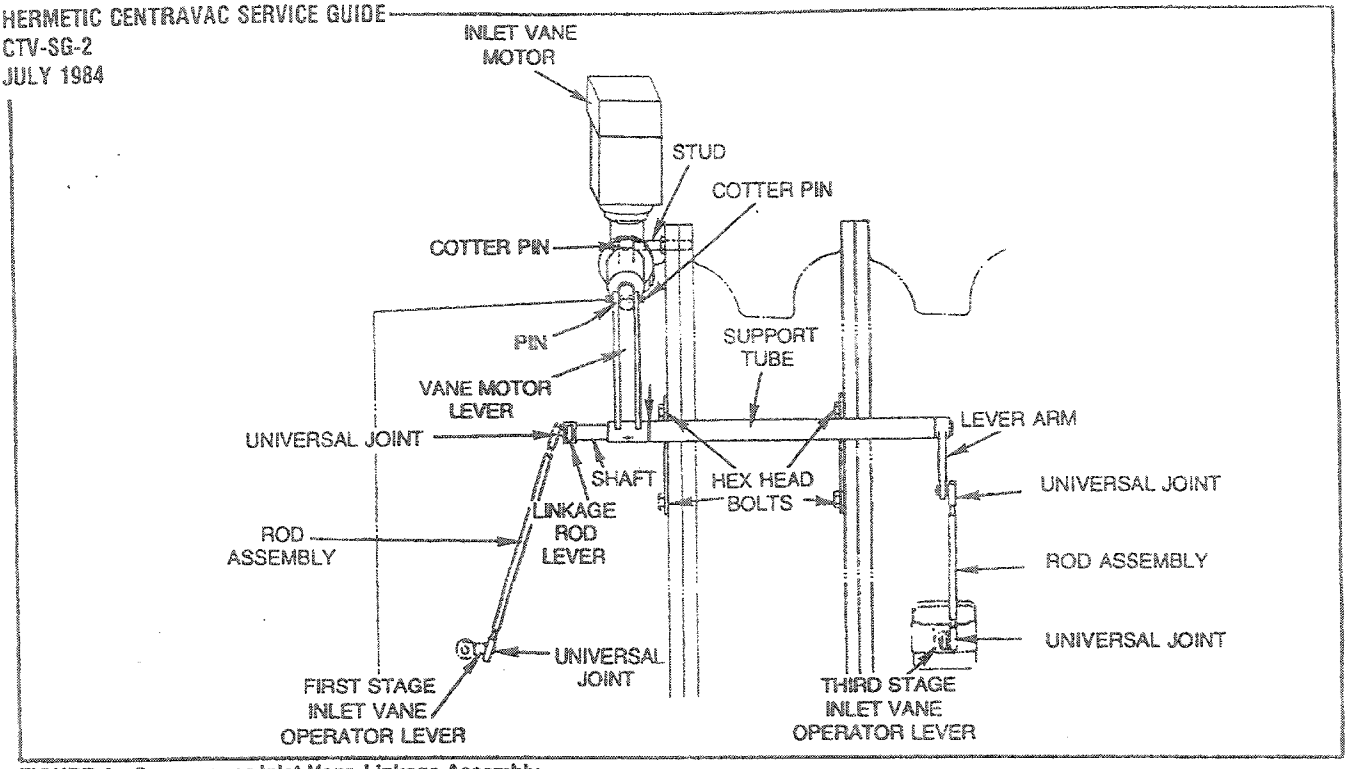

FIGURE 4 - Compressor Inlet Vane Linkage Assembly



FIGURE 5 - Disconnecting Linkage

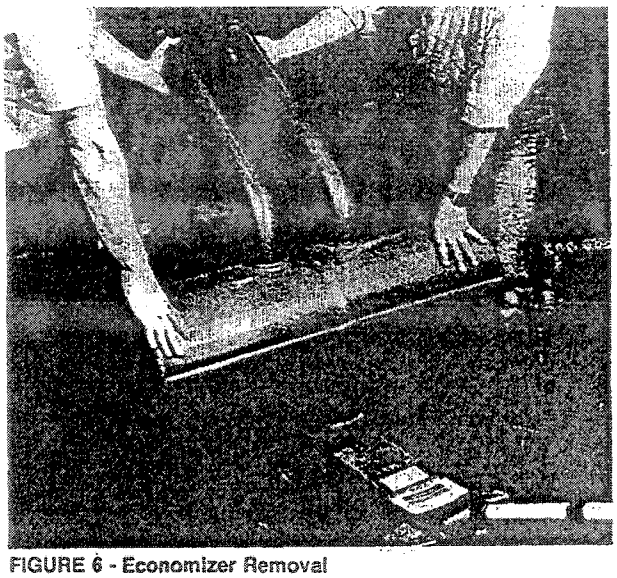

FIGURE 6 - Economizer Removal

2. Mark and disconnect all power leads to the inlet vane actuator motor. Remove the conduit assembly from the actuator motor. See Figure 4.

3. Remove the inlet vane actuator linkages.

   a. Disconnect the universal joints at the first and third stage inlet vane operator levers. See Figures 4 and 5.
   b. Remove four 5/8"-11x2" hex head bolts securing the vane drive support assemblies to the compressor castings. See Figure 4.
   c. Remove the cotter pin securing the vane operator stud.
   d. Slide the vane motor off the stud and remove the entire vane linkage assembly and vane motor from the chiller.
   e. Remove the linkage assembly from the vane motor by removing the cotter pin. The vane motor is now free and can be removed.

4. Before disassembling the compressor, scribe lines on the exterior of all compressor castings in two locations, 90 degrees apart. This must be done so that all components are precisely realigned during reassembly. Failure to complete this step may result in misalignment of the suction elbow and possible distortion of the compressor. This can result in seal-to-impeller interference and/or impeller failure.

It will be noticed at this point that some compressors will have been equipped with dowel pins. The dowel pins will have to be removed. These are removed by first removing the nut on the exposed end of the dowel pin. Then slip some washers or a bushing over the threads. Reinstall the nut and as the nut is tightened down, the pin will be pulled out of place. These dowel pins are installed on chillers which must be disassembled in order to move them into the equipment room during installation. The dowel pins allow for precise reassembly of the compressor components in their original position.

5. Remove the economizer to allow for compressor volute clearance.

6. Remove the compressor suction elbow.

a. Cut the 7/8-inch vent line between the oil sump and suction cover area. Sand all paint off the pipe at the point where the cut is to be made. Make the cut using a tubing cutter in a straight section of pipe. This will facilitate reassembly using a sweat connection.
b. Disconnect and remove the control panel support bracket. See Figure 9.
c. Attach a sling with overhead chain hoist to the suction elbow to support its weight.
d. Remove the bolts on the suction cover and evaporator connections. Remove the suction elbow. See Figure 10.
e. Cover the evaporator suction pipe with plywood to prevent entry of dirt and debris into the evaporator. See Figure 11. Coat all bare metal surfaces with a light coat of compressor oil to prevent rust formation.

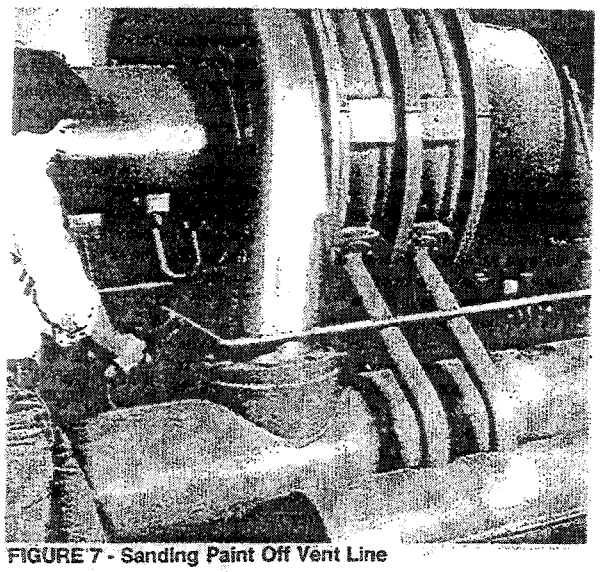

FIGURE 7 - Sanding Paint Off Vent Line

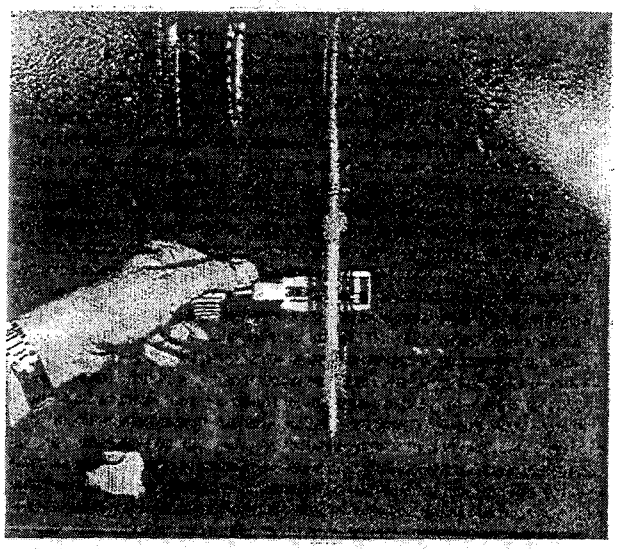

FIGURE 8 - Making the Cut

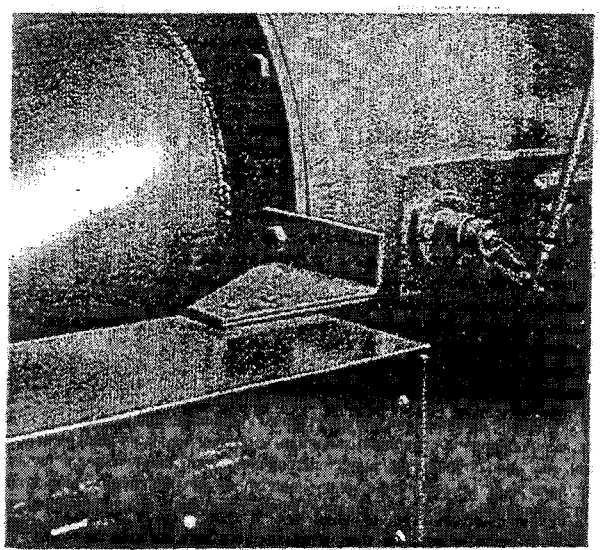

FIGURE 9 - Control Panel Support Bracket

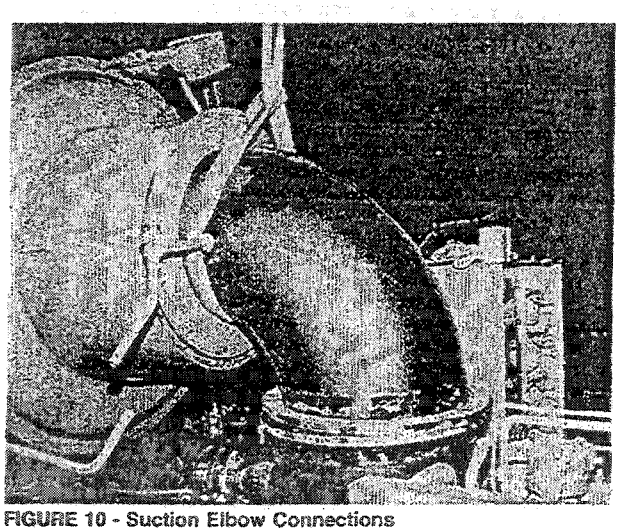

FIGURE 10 - Suction Elbow Connections

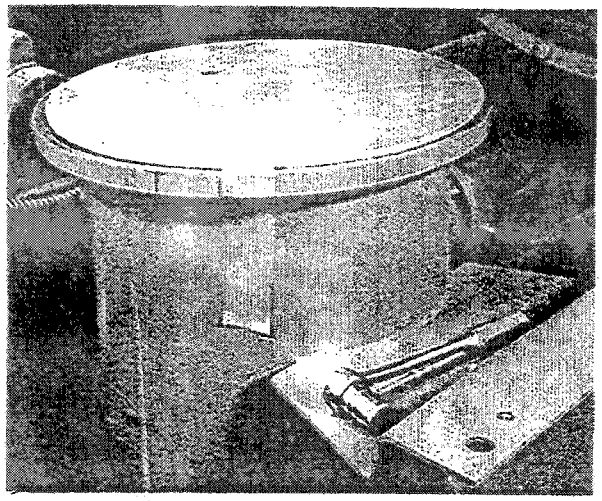

FIGURE 11 - Suction Elbow Evaporator Connection With Protective Cover

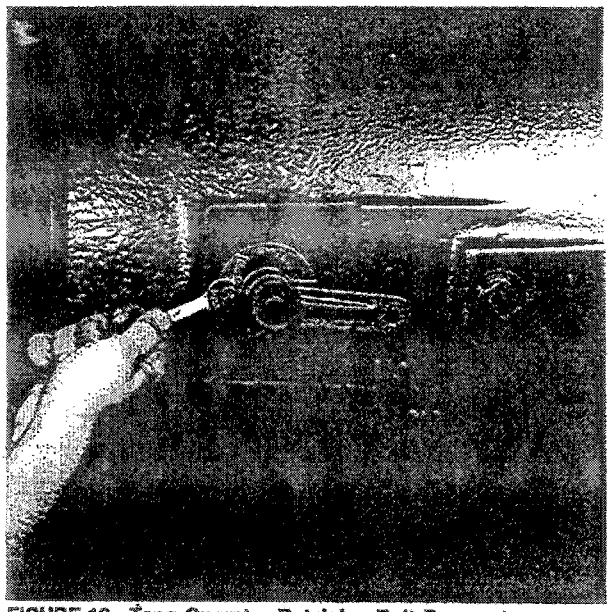

FIGURE 12 - Tang Operator Retaining Bolt Removal



FIGURE 13 - Tang Operator

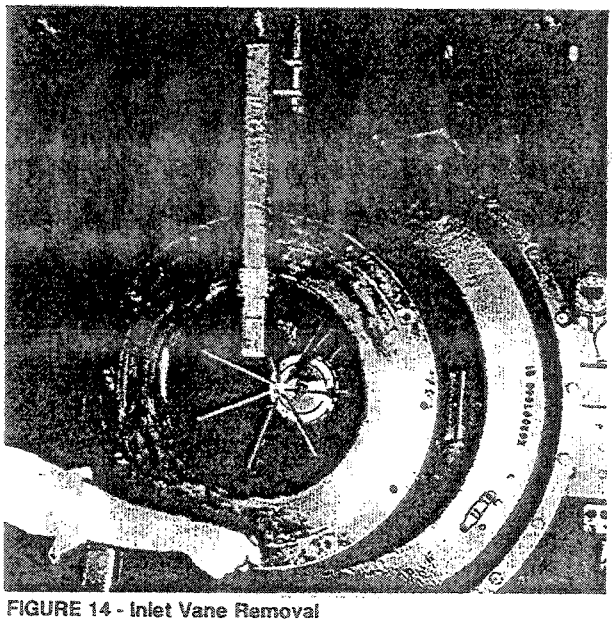

FIGURE 14 - Inlet Vane Removal

7. Remove the first stage inlet vane assembly.

   a. Loosen and remove the 5/16"-18x1" hex head bolts and lockwashers securing the tang operator to the suction cover. See Figure 12. Remove the tang operator assembly. See Figure 13.
   b. Remove the 5/16"-18x3/8" screws countersunk in the suction cover. Hold the cover in place since it will slide out when the setscrews are removed.
   c. Remove the inlet vane assembly. The tool shown in Figure 14 can be fabricated locally using the drawing in Figure 15.

   If this tool cannot be fabricated, a five-foot section of heavy duty pipe can be used for removal of the inlet vane assembly. Slide the pipe between the vane blades at the top of the vane housing. A chain or sling should be positioned around the pipe as close as possible to the vane housing. The pipe is used as a fulcrum to lift the weight of the inlet vane assembly and then slide the assembly out of the suction cover a short distance. A chain or sling can then be wrapped around the housing just inside the flanged outer portion while the assembly is allowed to rest on the inside of the suction cover. The housing should then be lifted slightly and removed from the suction cover. The weight of the assembly is given in Table 3.

8. Remove the first stage impeller nose seal. Refer to Figure 16.

   a. Measure and record the seal clearance for indication of excessive wear. Figure 17 illustrates how to make the measurement using a feeler gauge. Mark the seal for TOP and FIRST STAGE. Table 1 provides proper clearance specifications.
   b. If so equipped, bend the tabwasher tab back allowing the hex head bolts which secure the seal to be removed. The tabwashers can be replaced by ramp washers during reassembly, or new tabwashers should be used.
   c. Remove the seal.

TABLE 1 - Clearances

IMPELLER SEAL RING CLEARANCE			
COMPR SIZE	1ST STG	2ND STG	3RD STG
013 thru 014	.0295/.0195	.024/.0165	.024/.0165
015 thru 020	.0295/.0195	.0295/.0195	0.24/0.165
022	.0295/.0195	.0295/.0195	.0295/.0195
023 thru 032	.033/.022	.0295/.0195	.0295/.0195
035	.033/.022	.033/.022	.0295/.0195
036 thru 045	.0365/.0245	.033/.022	.0295/.0195
049 thru 050	.0365/.0245	.033/.022	.033/.022
055	.0365/.0245	.0365/.0245	.033/.022
056 thru 071	.043/.0285	.0365/.0245	.033/.022
079 thru 080	.043/.0285	.0365/.0245	.0365/.0245
089 thru 112	.046/.031	.043/.0285	.0365/.0245
125	.046/.031	.043/.0285/.043/	
	.0285		
Seal To Shaft .0005/.003 All Sizes			

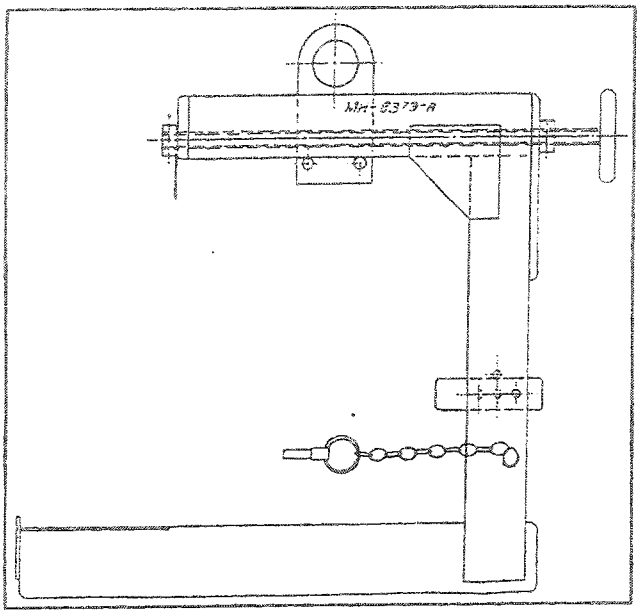

FIGURE 15 - Inlet Vane Lifting Tool

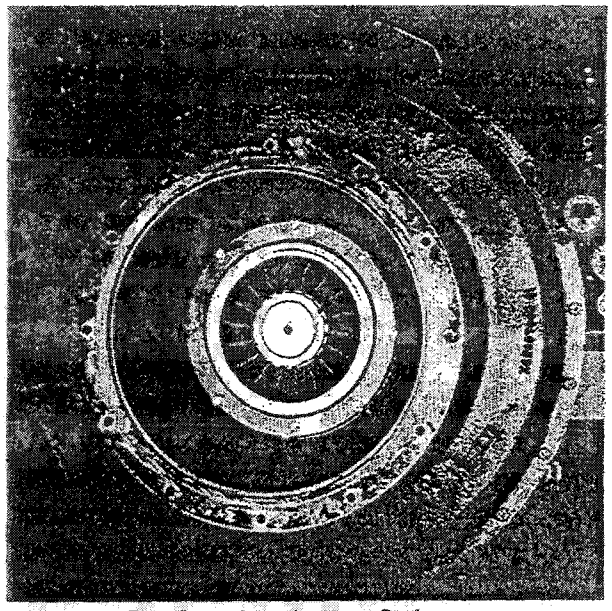

FIGURE 16 - First Stage Impeller Nose Seal

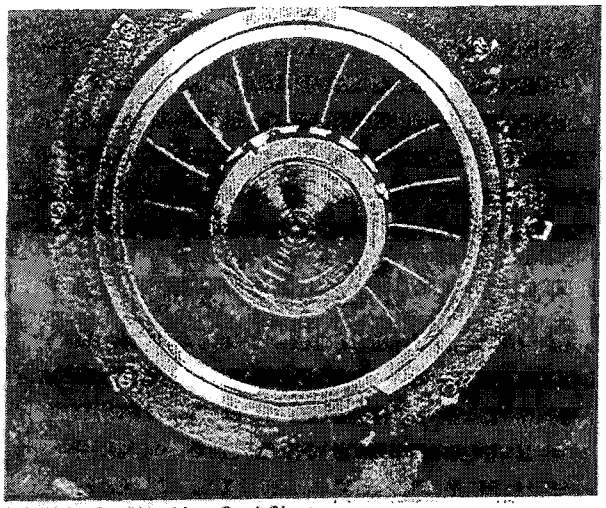

FIGURE 17 - Checking Seal Clearance

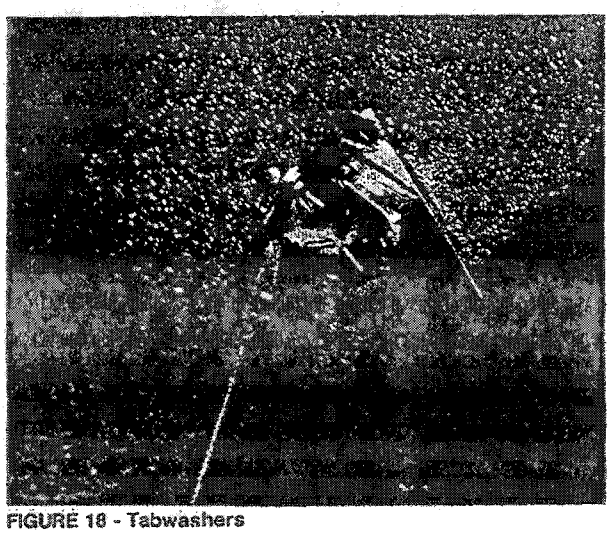

FIGURE 18 - Tabwashers

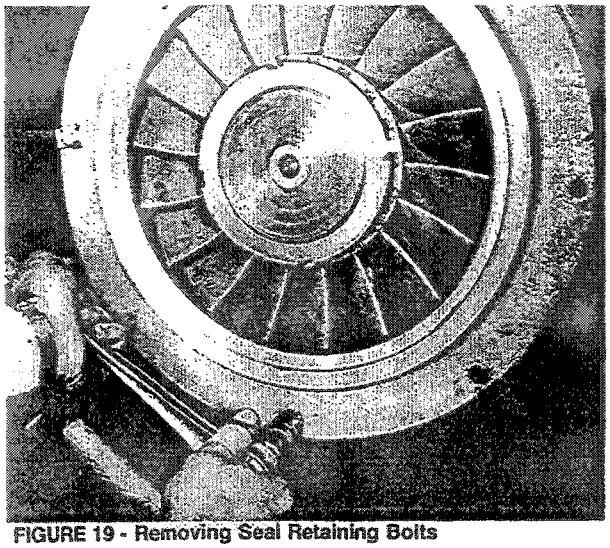

FIGURE 19 - Removing Seal Retaining Bolts

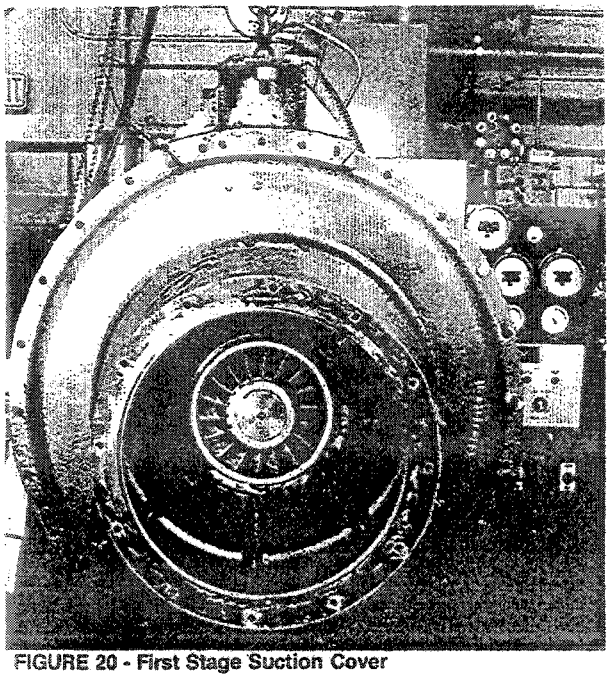

FIGURE 20 - First Stage Suction Cover

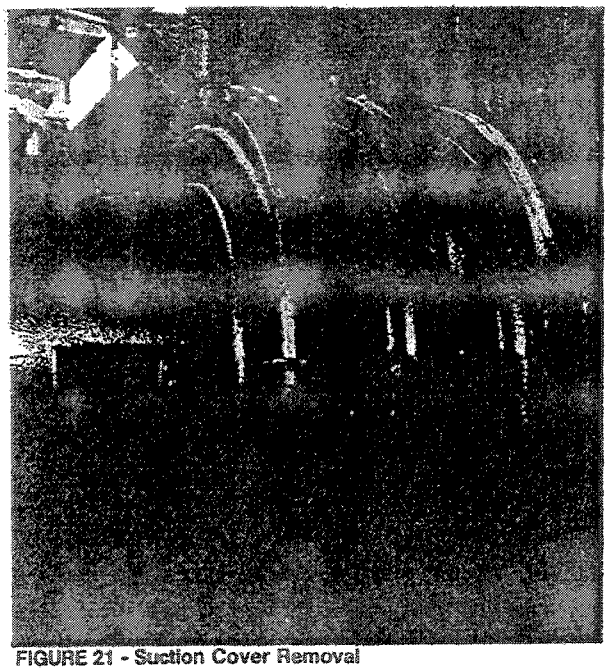

FIGURE 21 - Suction Cover Removal



FIGURE 22 - Suction Cover Lifting Tool

9. Remove the suction cover and O-ring.
   a. Disconnect the 1/4-inch oil drain line between the bottom of the suction cover nd oil sump.
   b. Attach rigging to the suction cover for lifting. Remove two bolts from the suction cover, 180 degrees apart on the horizontal centerline and insert guide pins. A lifting tool (part number TOL-89) is available from The Trane Company. The tool shown in Figure 20 and 21 is not available, however Figure 22 illustrates the proper tool.
   c. Remove a bolt near the top of the suction cover and insert a long bolt as shown in Figure 21.
   d. Remove all bolts except the one at the top and two bolts near the bottom. See Figure 20.
   e. Loosen the upper bolt and the lower bolts. Pry the cover away at the top and loosen the top bolt enough to attach the lifting tool. See Figure 23.
   f. Attach the overhead hoist, take the weight off the remaining bolts and then carefully remove the suction cover. See Figure 23. Also remove the suction cover O-ring. Lightly coat all bare metal surfaces with compressor oil.

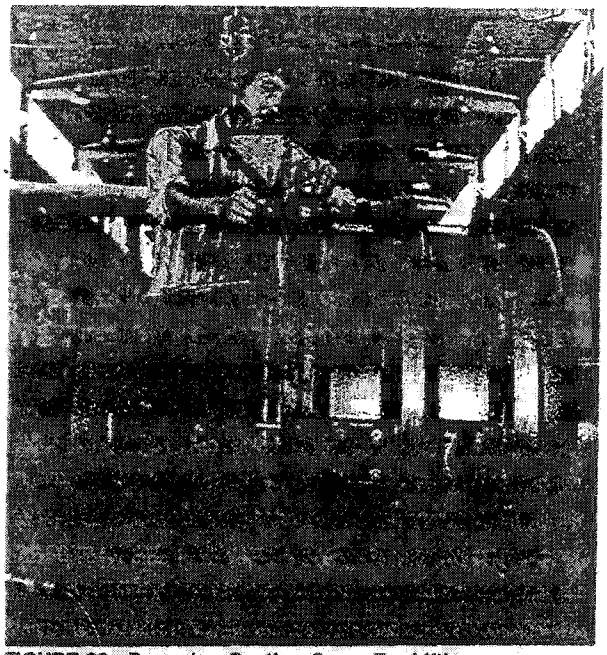

FIGURE 23 - Preparing Suction Cover For Lifting

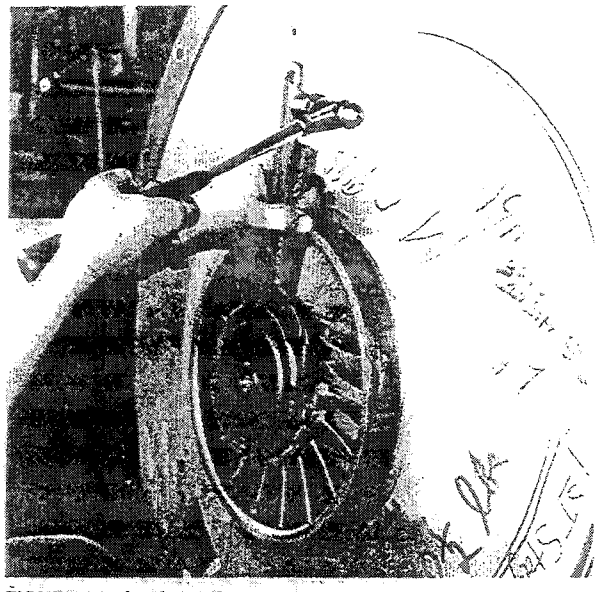

FIGURE 24 - Locknut Removal

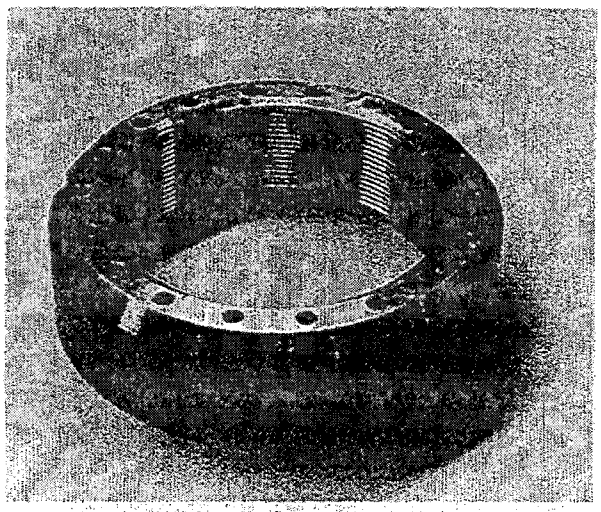

FIGURE 25 - Balancing Locknut

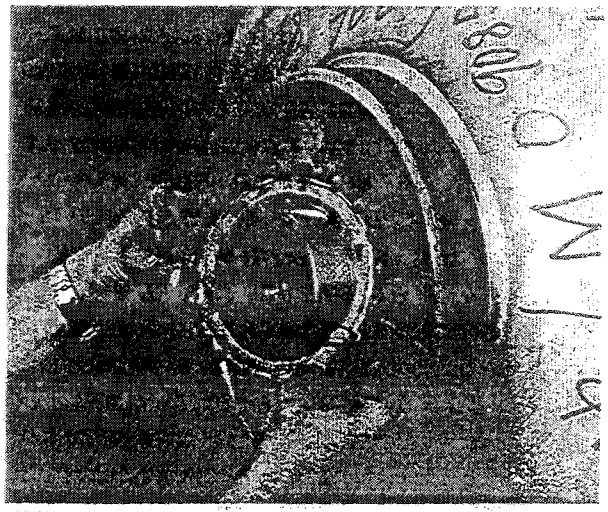

FIGURE 26 - Lockwasher

10. Remove the first stage impeller.

NOTE: UNITS ARE EQUIPPED AS STANDARD WITH A LOCKNUT AS SHOWN IN FIGURE 24. REMOVAL OF THIS LOCKNUT IS DESCRIBED IN THE FOLLOWING STEPS. SOME COMPRESSORS MAY BE EQUIPPED WITH A BALANCING LOCKNUT WHICH IS SHOWN IN FIGURE 25. THIS LOCKNUT HAS SMALL HOLES IN THE FACING SURFACE FOR THE PURPOSE OF INSTALLING BALANCING SCREWS. IF THERE ARE BALANCING SCREWS IT IS VERY IMPORTANT THAT BEFORE REMOVING THE BALANCING LOCKNUT THAT IT BE MARKED SO THAT ITS POSITION RELATIVE TO THE SHAFT KEYWAY IS MAINTAINED DURING REASSEMBLY.

DURING DISASSEMBLY IT IS IMPORTANT THAT ALL COMPONENTS BE MARKED AND IDENTIFIED RELATIVE TO ITS POSITION IN THE COMPRESSOR ASSEMBLY. FOR EXAMPLE, "NUT TO IMPELLER" OR "IMPELLER TO SPACER". BE SURE TO MARK EACH COMPONENT BEFORE DISASSEMBLY WITH IDENTIFICATION AND RELATIVE POSITION. COAT COMPONENTS LIGHTLY WITH COMPRESSOR OIL TO PREVENT CORROSION.

a. Bend the lock tab securing the impeller locknut.
b. Remove the impeller locknut and lockwasher. Use a spanner wrench. See Figures 24 and 26. This has right-hand threads.
c. Remove the springwasher.
d. Remove the spacer (CVHE 013 through 080 units only).
e. Remove the impeller. It may be necessary to use a puller. Mark the impeller FIRST STAGE. See Figure 27.
f. Remove the impeller key and shims from behind the impeller. See Figure 28.
g. Remove the spacer.

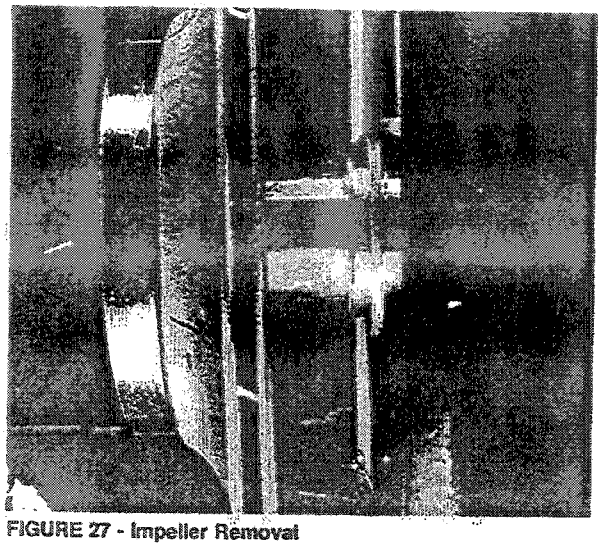

FIGURE 27 - Impeller Removal

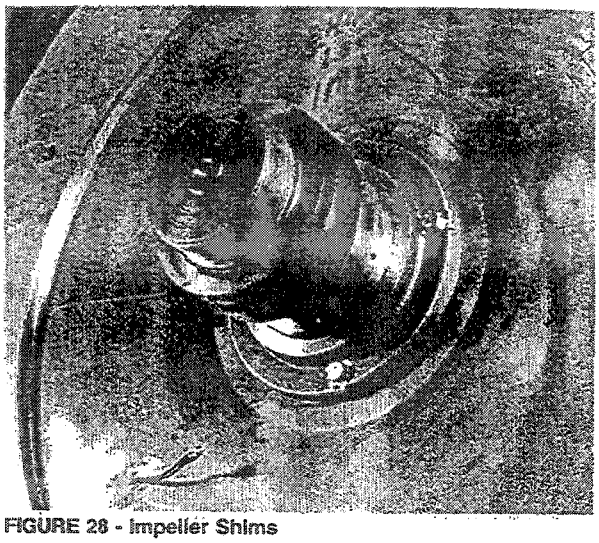

FIGURE 28 - Impeller Shims

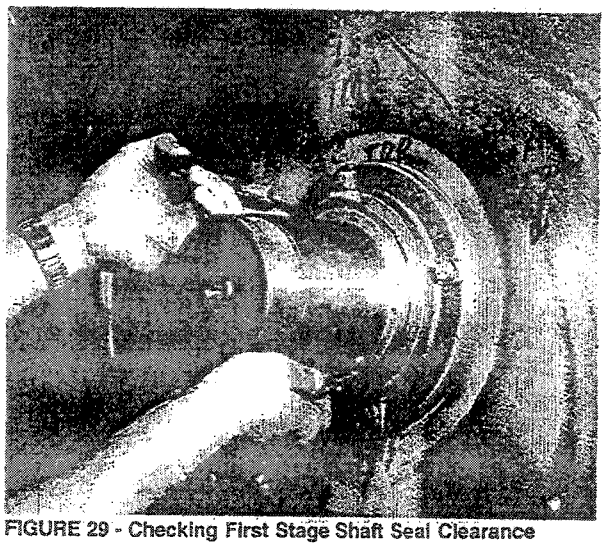

FIGURE 29 - Checking First Stage Shaft Seal Clearance

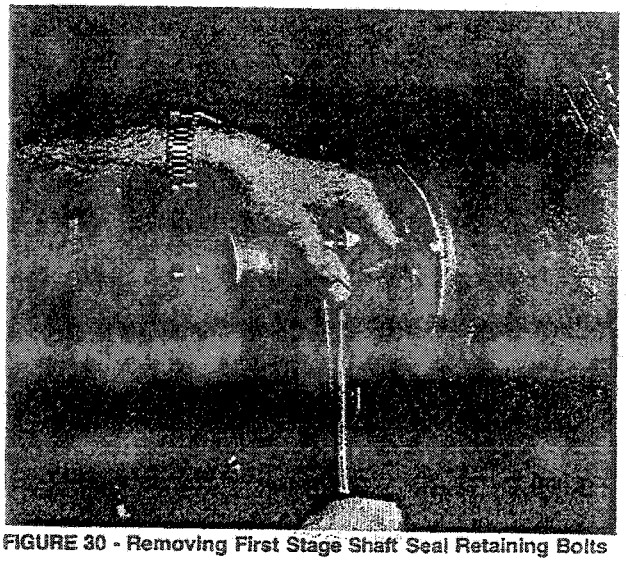

FIGURE 30 - Removing First Stage Shaft Seal Retaining Bolts

11. Remove the first stage shaft seal.
    a. Check the seal clearance for wear and record measurement. Proper clearances are given in Table 1. See Figure 29. Mark the seal for TOP and FIRST STAGE.
    b. Loosen and remove 3/8"-16x1" bolts and tab or rampwashers which secure the seal to the vane plate. See Figure 30.
    c. Remove the seal.
12. Remove the shaft spacer. See Figure 31.
    a. Removal may require the use of a puller. See Figure 32. Lightly coat the spacer with compressor oil.
13. Remove the first stage diffuser plate. See Figures 33 and 34.
    a. Remove 3/8"-16 socket head screws, 180 degrees apart.
    b. Mark the diffuser plate for TOP and FIRST STAGE.

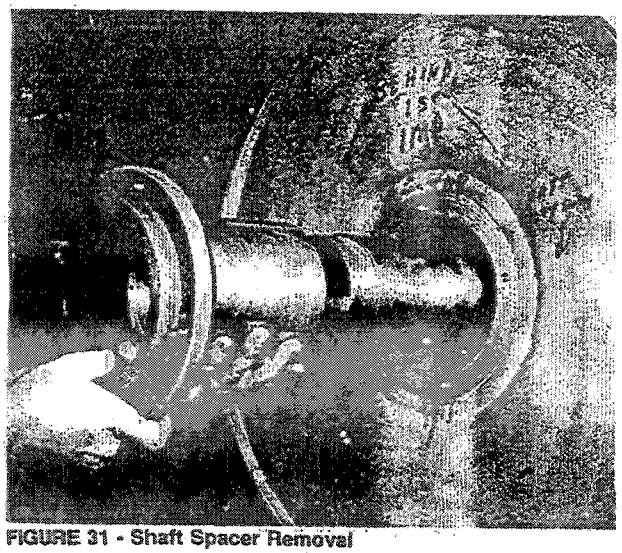

FIGURE 31 - Shaft Spacer Removal

c. Install two 3/8"-16x6" or longer guide pins in the two bolt holes. See Figure 33.
d. Remove the remaining socket head screws.
e. Back the plate away far enough to attach the lifting rig. Support the plate on the guide pins. Lifting the plate can be accomplished by using a nylon sling, rope or steel cable instead of the lifting tool shown in Figure 34. Insert the sling or cable through the center of the plate and through the clearance between the shaft and hole in the plate. Lift the plate directly by the sling or cable.

14. Remove the second stage shroud assembly. See Figure 35.

a. Leave the guide pins installed in Step 13 in place.
b. Mark the TOP of the shroud assembly.
c. Remove the 1/4"-20x3/4" flathead screws securing the shroud assembly. See Figure 35.
d. Attach a lifting sling or cable as in Step 13E. Remove the shroud, guiding it clear with the guide pins. See Figure 36. Lightly coat the shroud with compressor oil.

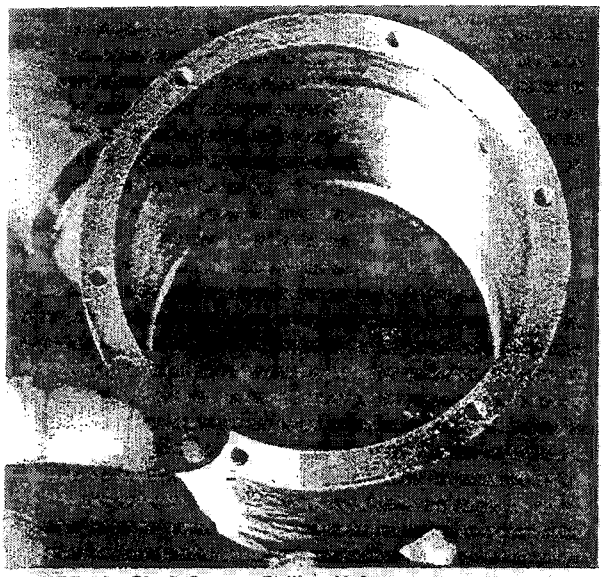

FIGURE 32 - Shaft Spacer Pulling Holes

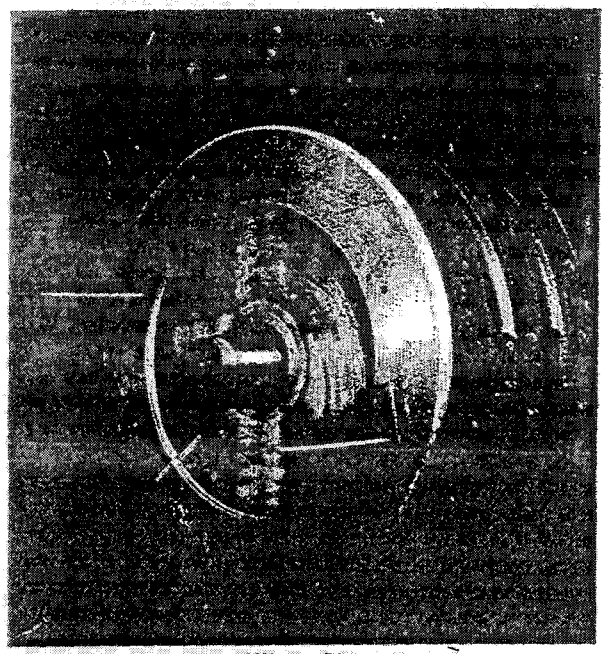

FIGURE 33 - First Stage Diffuser Plate

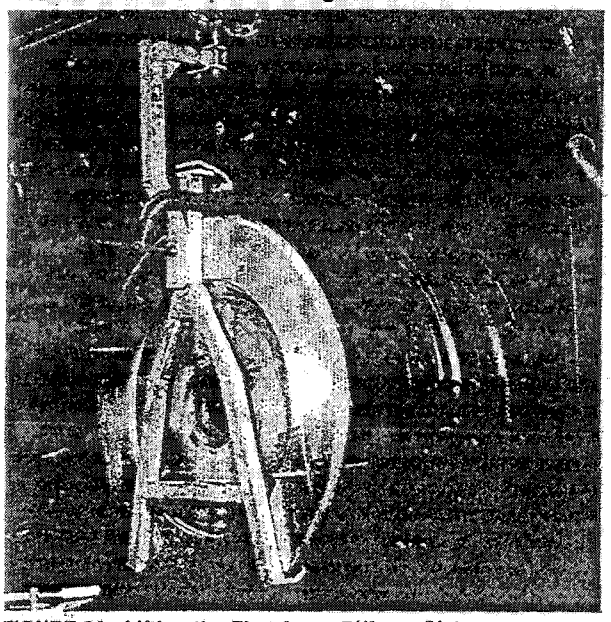

FIGURE 34 - Lifting the First Stage Diffuser Plate

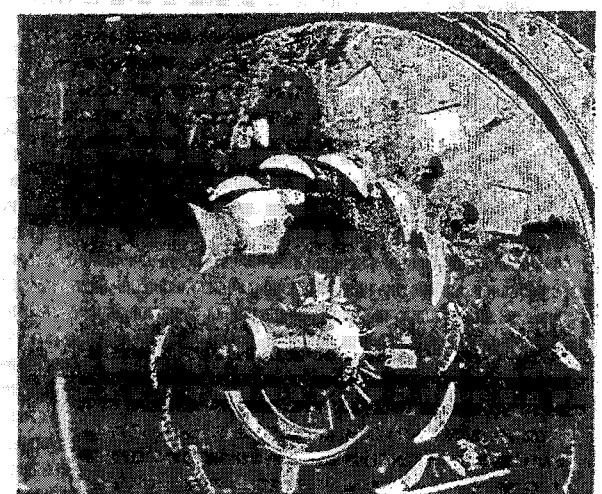

FIGURE 35 - Removing the Second Stage Shroud Retaining Bolts

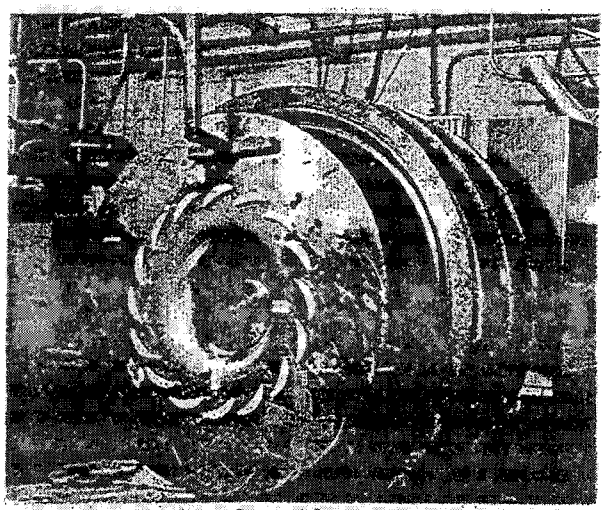

FIGURE 36 - Lifting the Second Stage Shroud

15. Remove the second stage impeller nose seal. Refer to Figure 37.
    a. Measure and record the seal clearance for indication of wear. See Figure 38. Table 1 provides proper clearances.
    b. Mark the seal for TOP and SECOND STAGE.
    c. Remove the 3/8"-16x1" hex head screws and tab or rampwashers.
    d. Remove the seal. See Figure 39.
16. Remove the second stage suction cover and O-ring.
    a. Scribe two marks, 90 degrees apart on the outer surface of the casting and mating casting. This will allow precise alignment of the components when reassembling the compressor.
    b. Remove two of the 5/8"-11x2" bolts and insert two guide pins in place, 180 degrees apart. See Figure 40.
    c. Attach the lifting rig to the suction cover. Remove the remaining bolts securing the suction cover and then remove the suction cover. Coat all bare metal surfaces with compressor oil to prevent corrosion. See Figure 41.
17. Remove the second stage impeller and shim in front of impeller. See Figure 42.
    a. A puller may be necessary to remove the impeller.
    b. Mark the impeller SECOND STAGE.
    c. Remove the key and shims from behind the impeller. These must also be marked SECOND STAGE. Lightly coat the components with compressor oil.

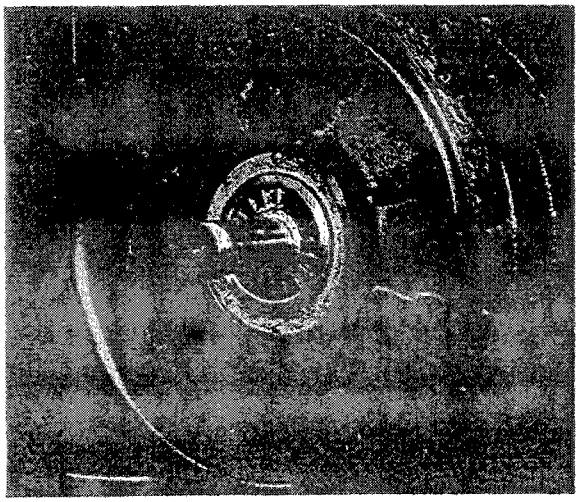

FIGURE 37 - Second Stage Impeller Nose Seal

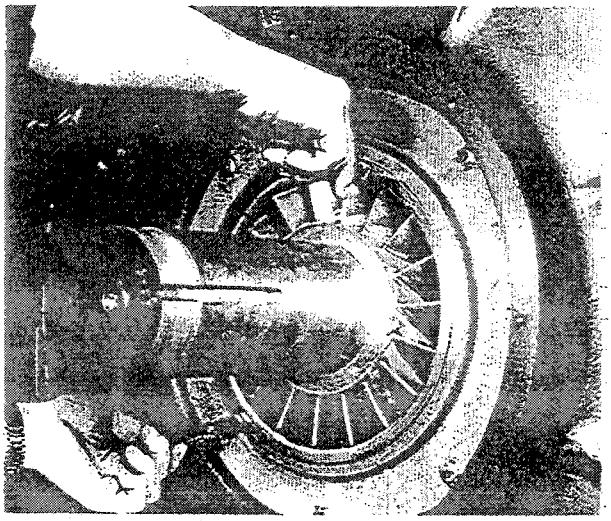

FIGURE 38 - Measuring the Seal Clearance

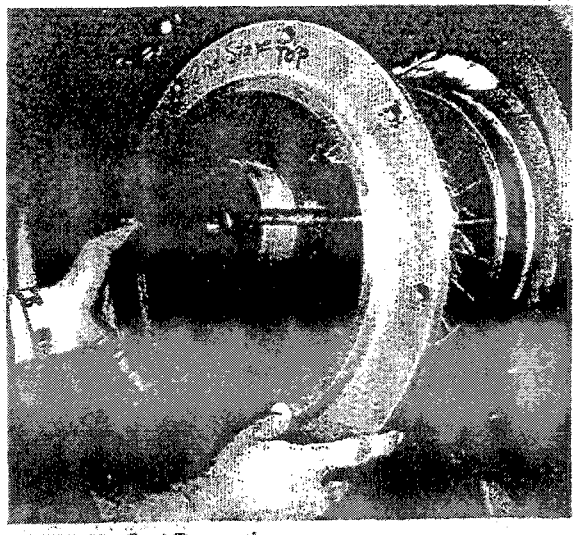

FIGURE 39 - Seal Removal

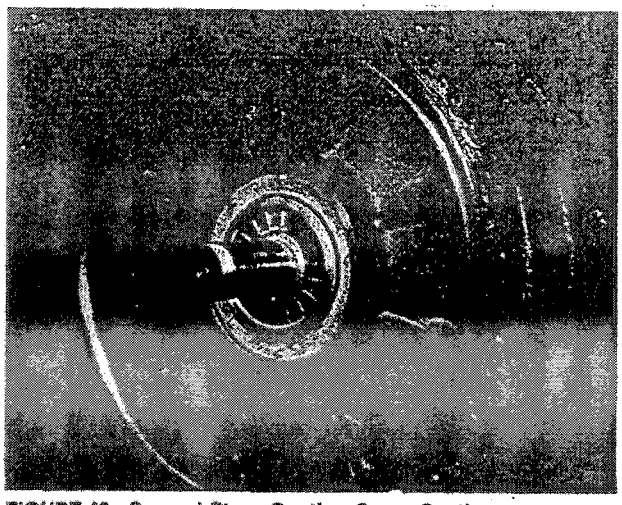

FIGURE 40 - Second Stage Suction Cover Casting

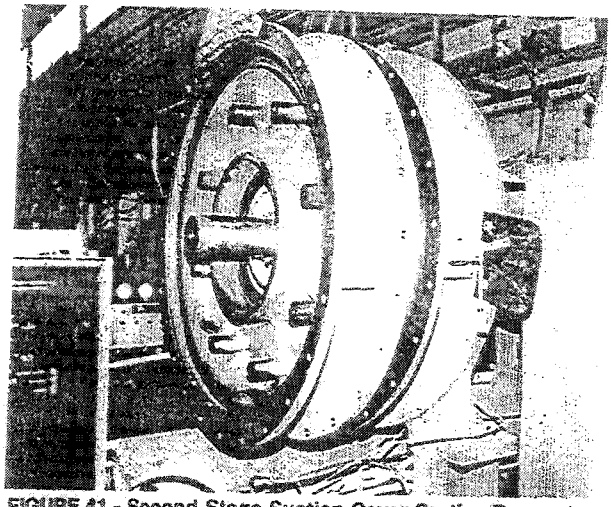

FIGURE 41 - Second Stage Suction Cover Casting Removal

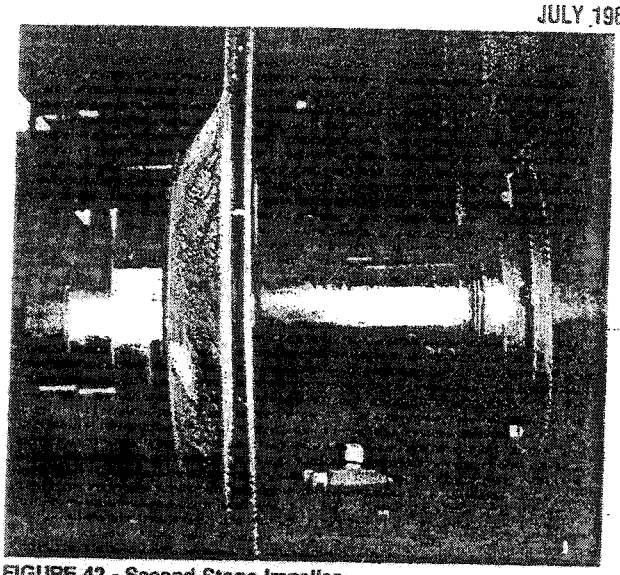

FIGURE 42 - Second Stage Impeller

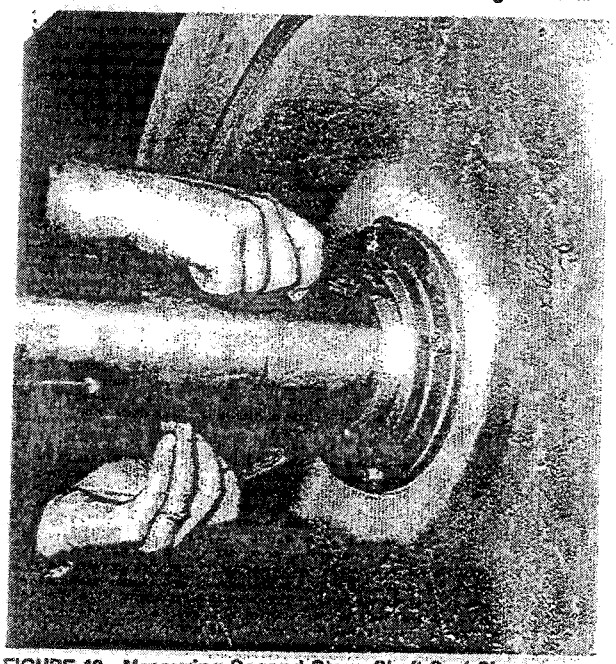

FIGURE 43 - Measuring Second Stage Shaft Seal Clearance

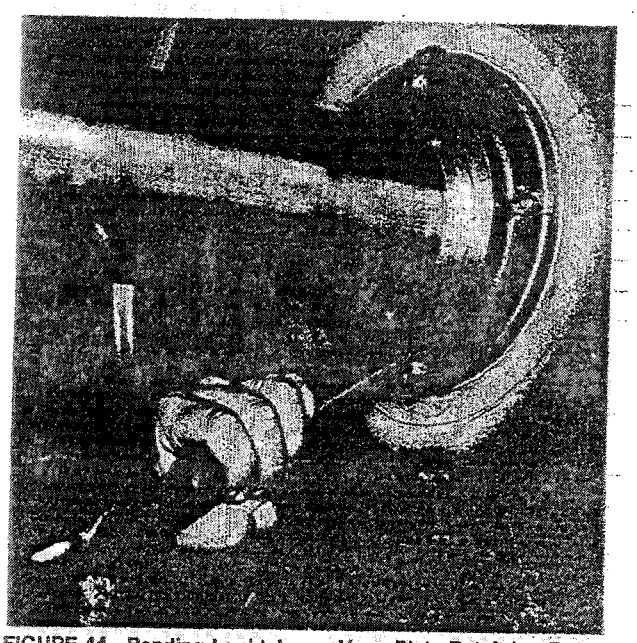

FIGURE 44 - Bending Locktabs on Vane Plate Retaining Bolts

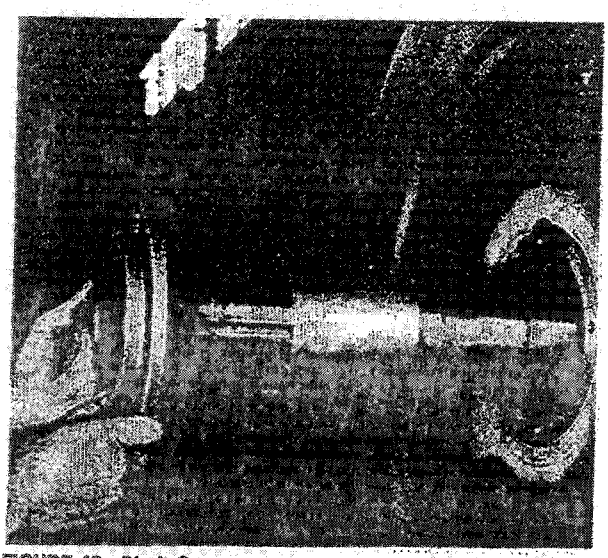

FIGURE 45 - Shaft Spacer

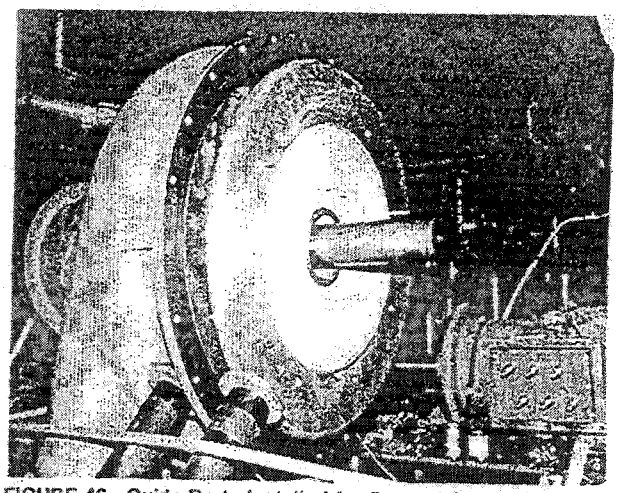

FIGURE 46 - Guide Rods Installed for Second Stage Diffuser Plate Removal

18. Mark and remove the second stage shaft seal.
    a. Measure the seal clearance and record for wear indication. Proper clearances are given in Table 1. See Figure 43.
    b. Mark the seal for TOP.
    c. Remove the 3/8"-16x1" bolts and tab or rampwashers which secure the seal to the vane plate. See Figure 44.
    d. Remove the seal. See Figure 45.

19. Remove the shaft spacer. It may be necessary to use a puller. See Figure 45.

20. Remove the second stage diffuser plate.
    a. Mark the plate for TOP.
    b. Remove two 38"-16 socket head screws, 180 degrees apart and insert 3/8"-16 guide pins. See Figure 46.
    c. Remove the remaining socket head screws.
    d. Attach a lifting rig or sling as described in Step 13E and remove the vane plate. Lightly coat the plate with compressor oil.

21. Remove the third stage vane operator assembly. See Figures 48, 49, 50 and 51.
    a. Remove the 1/2"-13x1/2" hex head screws securing the vane operator assembly. See Figure 50.
    b. Remove the vane operator and gasket. See Figure 51. Lightly coat all bare metal surfaces with compressor oil.

22. Remove the third stage shroud and vane assembly.
    a. Mark the assembly for TOP.
    b. Leave the guide pins installed in Step 20 in place. See Figure 52.
    c. Remove the 1/4"-20x3/4" flathead screws securing the shroud. See Figure 53.
    d. Attach a sling or cable as in Step 13E to the shroud and remove the shroud and vane assembly. See Figure 54. Lightly coat the components with compressor oil.

23. Remove the third stage impeller nose seal.
    a. Mark the seal for TOP and THIRD STAGE.
    b. Measure and record seal clearance for wear indication. Table 1 provides proper clearances. Figure 55 illustrates the clearances being measured. Measure the clearance all the way around the seal. Remove the 3/8"-16x1" hex head screws and tab or rampwashers. See Figure 56.
    c. Remove the seal. Lightly coat the seal with compressor oil.

24. Scribe two marks, 90 degrees apart in the third stage suction cover casting and mating casting. This will allow precise alignment of the components during reassembly of the compressor. Remove the third stage suction cover casting and O-ring.
    a. Remove two 5/8"-11x2" bolts, 180 degrees apart and insert 5/8"-11x6" guide pins as shown in Figure 57.
    b. Attach lifting rig to the suction cover.
    c. Remove the remaining bolts securing the suction cover and remove. See Figure 58. Lightly coat all bare metal surfaces with compressor oil for protection from corrosion.

25. Remove the third stage impeller and shim in front of impeller. See Figure 59.
    a. Mark the impeller for THIRD STAGE.
    b. The use of a puller may be required for removal.
    c. Remove the key and shims after removing the impeller.
    d. Lightly coat all components with compressor oil to prevent corrosion.

26. Remove the bearing oil seal and gasket.
    a. Measure and record the seal clearance for wear indication. Refer to Figures 60 and 61. Measure the seal clearance all the way around as shown. Proper clearancesare 0.0005 inches minimum and 0.003 maximum.
    b. Mark the seal for TOP. This is important since the seal has a small oil drain hole in the back which must be correctly aligned during reassembly. This is shown in Figure 62.
    c. Remove the hex head screws and tab or rampwashers securing the seal and gasket. See Figure 63.

27. Remove the bearing oil seal mounting plate and gasket.
    a. Mark the plate for TOP.
    b. Remove two 3/8"-16x1" socket head screws and insert two guide rods.
    c. Remove the remaining screws and remove the plate and gasket. Use a nylon rope to lift the plate as described in Step 13E. Place a container under the plate since some oil will drain out. Lightly coat the plate with compressor oil.

This ends the compressor disassembly procedure. Inspect all components for damage or excessive wear. Do not reassemble the compressor using faulty components. Clean each component and apply a light coat of compressor oil to protect the components from moisture and corrosion (especially O-ring and gasket surfaces). Refer to Section 8.3 for reassembly procedures.



FIGURE 47 - Second Stage Diffuser Plate Removed

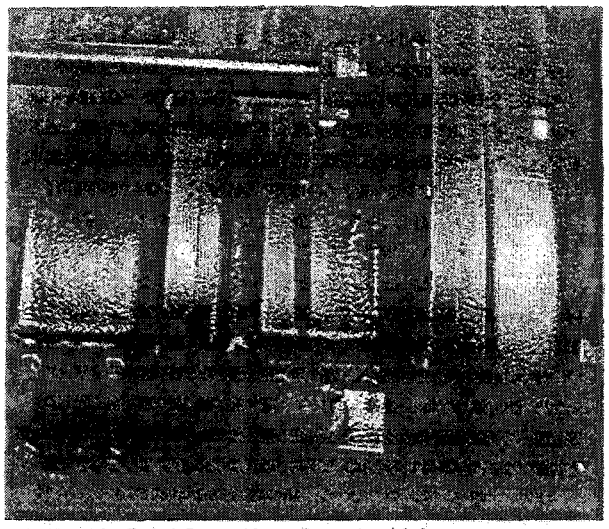

FIGURE 48 - Third Stage Vane Operator Linkage

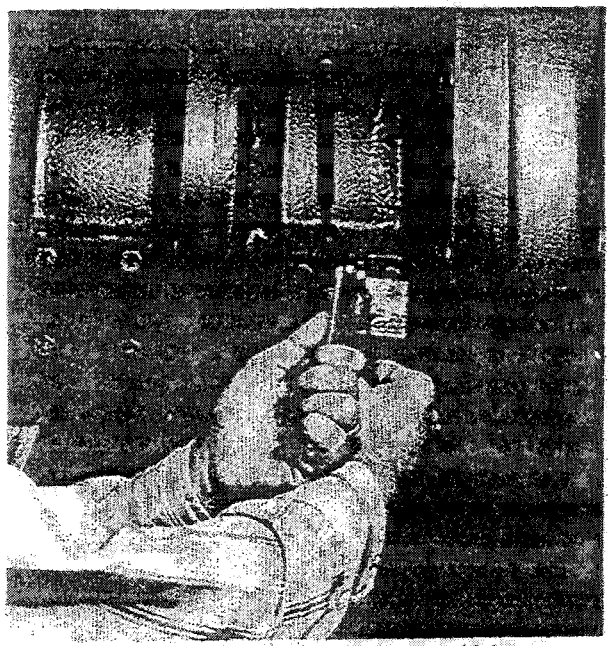

FIGURE 49 - Disassembling the Vane Operator Linkage



FIGURE 50 - Removing Retaining Bolts

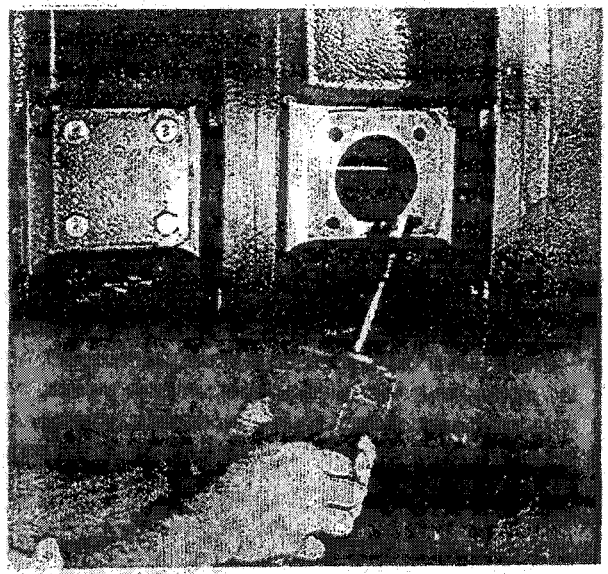

FIGURE 51 - Vane Operator

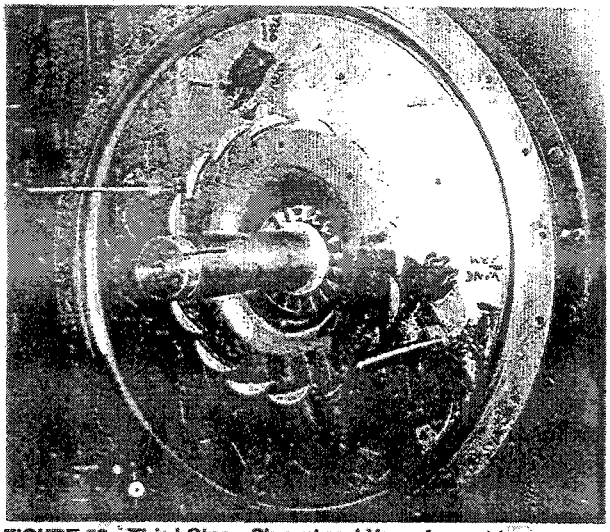

FIGURE 52 - Third Stage Shroud and Vane Assembly

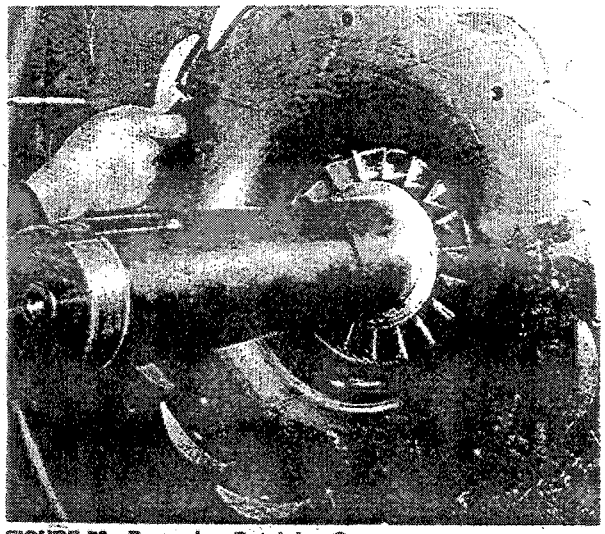

FIGURE 53 - Removing Retaining Screws

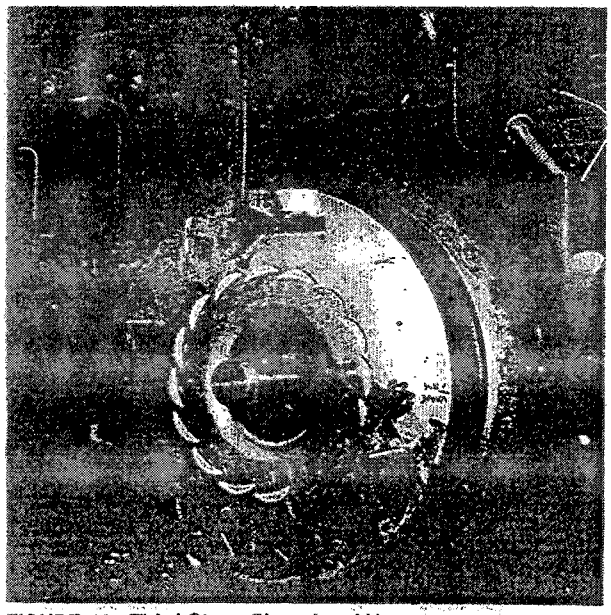

FIGURE 54 - Third Stage Shroud and Vane Assembly Removal

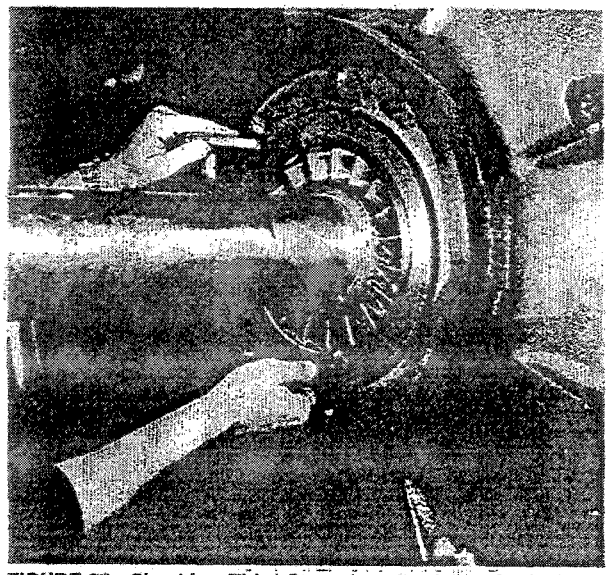

FIGURE 55 - Checking Third Stage Impeller Nose Seal Clearance

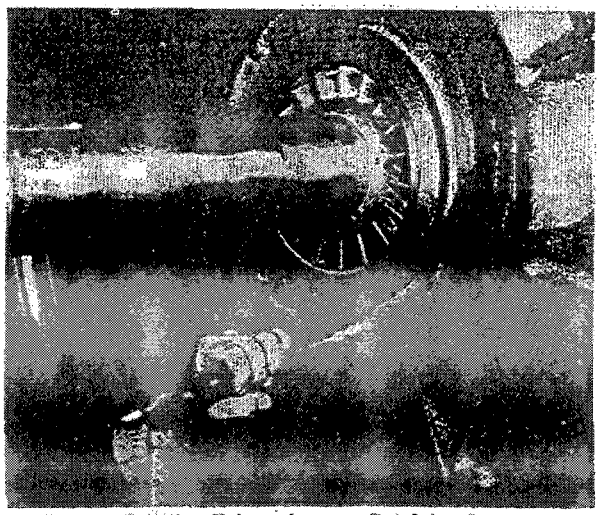

FIGURE 56 - Bending Tabwashers on Retaining Bolts

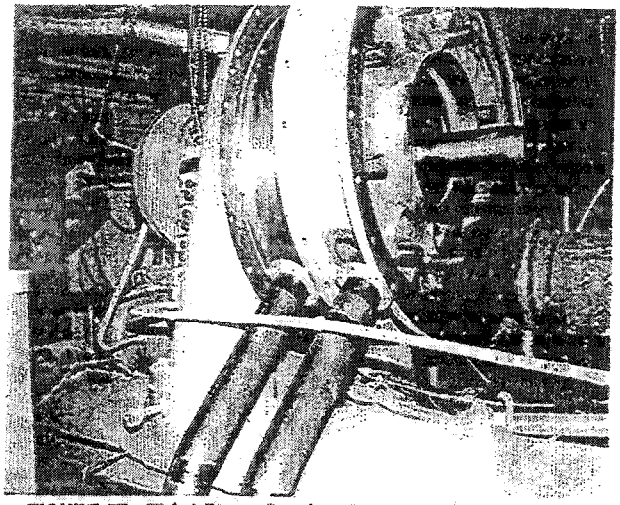

FIGURE 57 - Third Stage Suction Cover Casting and Guide Rods

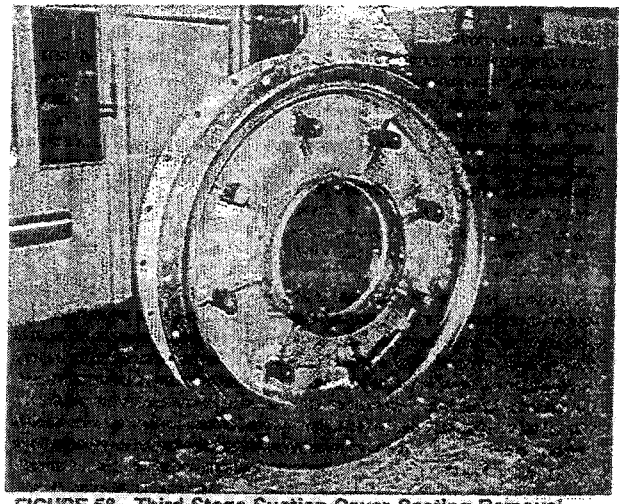

FIGURE 58 - Third Stage Suction Cover Casting Removal

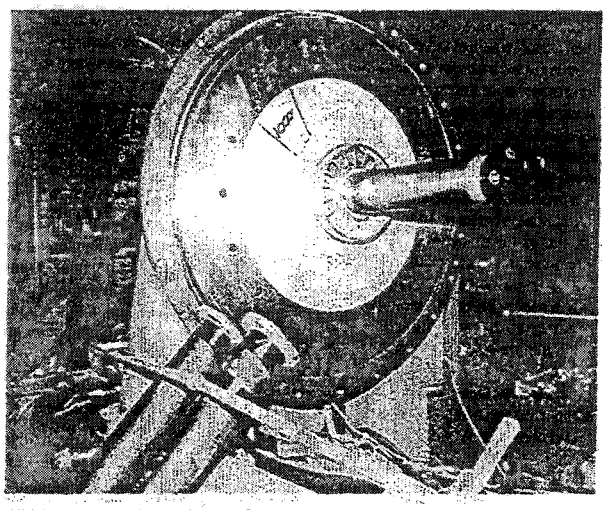

FIGURE 59 - Third Stage Impeller

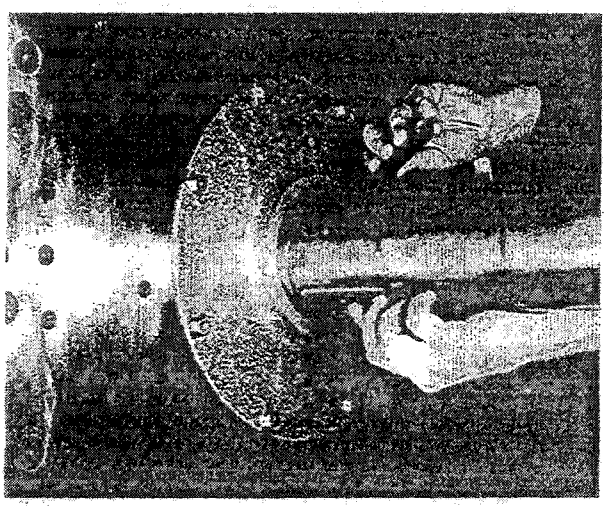

FIGURE 60 - Measuring Bearing Oil Seal Clearance

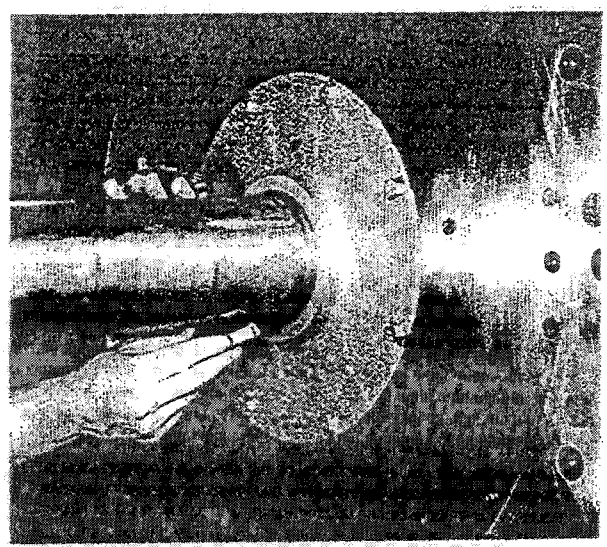

FIGURE 61 - Bearing Oil Seal Clearance Measurement

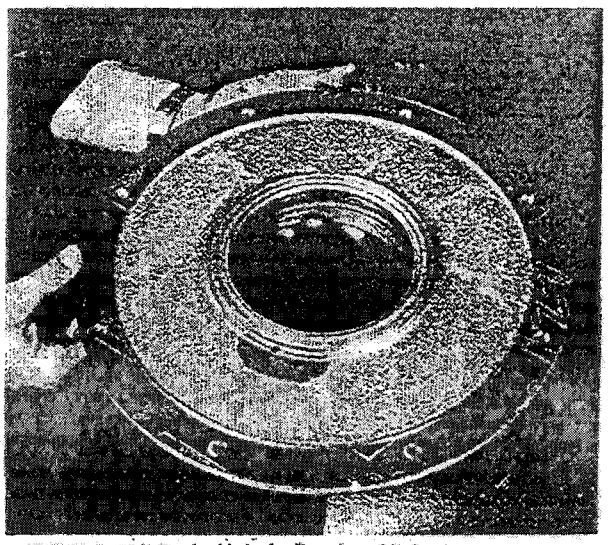

FIGURE 62 - Oil Drain Hole in Bearing Oil Seal

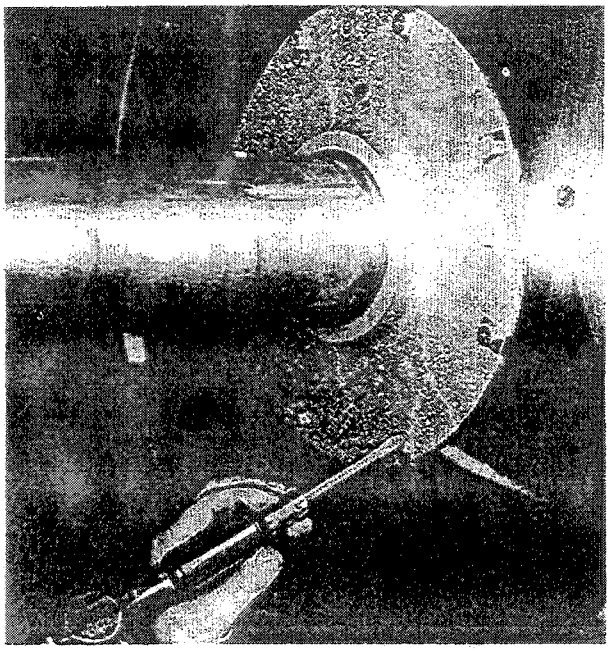

FIGURE 63 - Bending Tabwasher on Oil Seal Retaining Bolts

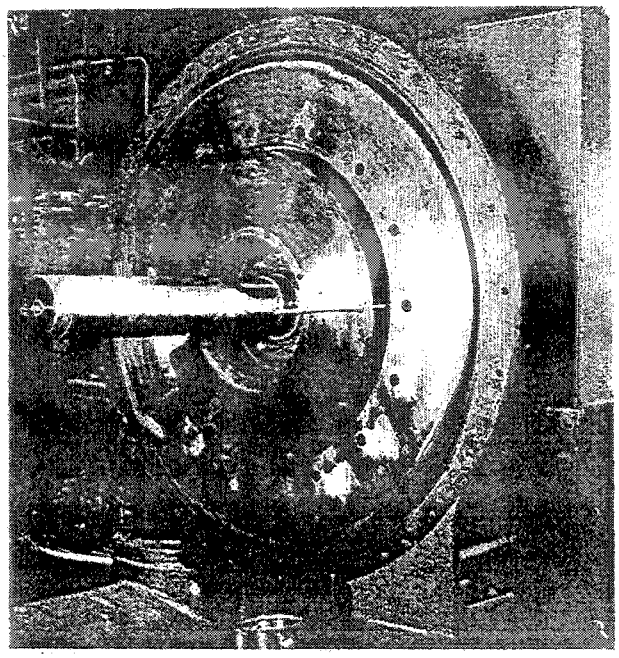

FIGURE 64 - Bearing Oil Seal Mounting Plate

LITERATURE FILE NO. CTV-SG-2

COMPRESSOR REASSEMBLY A, B, C AND D DESIGN SEQUENCE

SECTION 8.3

JULY 1984

This section describes reassembly of the Model CVHE CenTraVac compressor. It is assumed that the compressor motor is installed. Notice that at Step 15, two different procedures are given, depending on the size of the compressor.

Tool Requirements

The following tools should be gathered before proceeding:

05,CVHE lifting tool, Trane part number TOL-89
Inlet vane lifting tool
Guide pins, some 8 to 10 inches in length, some 4 to 6 inches in length. Several of each should have 5/8"-11 threads and several should have 3/8"-16 threads. These are used for assembly of diffuser plate flow shrouds and oil seals.
Threaded rod, 1/4"-20, used for impeller and spacer installation.
Large spanner wrench for compressor sizes 013 through 080.
Small spanner wrench for compressor sizes 089 through 125.
Rigging chains or straps. Chains are especially useful where overhead space is limited.

NOTE: Figures 62 and 63 are cutaway views of the CVHE compressor. Refer to these figures when reassembling the compressor. Table 1 provides critical clearance measurements.

NOTE: For balance purposes, the impellers must be installed so that the shaft key is in the up position. Also, alignment marks made on each compressor component during disassembly must be mated so that the balance of the compressor is maintained. This is extremely critical if the compressor is equipped with a balancing locknut. Maintaining the proper alignment of components will minimize the need for trim balancing.

Whenever a compressor is rebuilt due to motor replacement, an assortment of locknuts for the shaft should be available to insure proper assembly. This is necessary due to different machining tolerances of shaft threads and the internal threads of the locknut.

The balance locknut should be installed as it was before disassembly if no rotating components are changed. If a rotating component (for example an impeller) is changed, the locknut should be reinstalled with no balance weights installed since this will adversely affect the balance of the compressor. A properly fitting spanner wrench should be used to tighten the locknut to prevent damaging the outer surface of the locknut. If the outer surface is damaged, the locknut will have to be replaced so that the compressor can be trim balanced.

REASSEMBLY

1. Install the bearing oil seal mounting plate as shown in Figure 1.
   a. Clean all dirt and debris from the plate.
   b. Install the plate with a new gasket. Use two pieces of 3/8-inch guide pins to locate the plate. Be certain that the TOP (all components should have been marked during disassembly) is in the proper position.
   c. Tighten the 3/8"-16x1" socket head screws to 24 ft.-lbs. torque. Once several bolts are in place, the guide pins can be removed and mounting bolts installed in their place.
2. Install the bearing oil seal. See Figure 2.
   a. Measure the shaft runout with a dial indicator. The maximum allowable runout is 0.0012 inches Total Indicated Runout (TIR) at the end of the shaft. Refer to the information describing compressor motor reassembly for details on how to measure shaft runout and end float. If the compressor is of "A" or "B" design sequence it will be necessary to pre-load the thrust bearing to obtain an accurate indication of runout. Refer to the procedure for reassembly of "A" and "B" design sequence compressor motors.

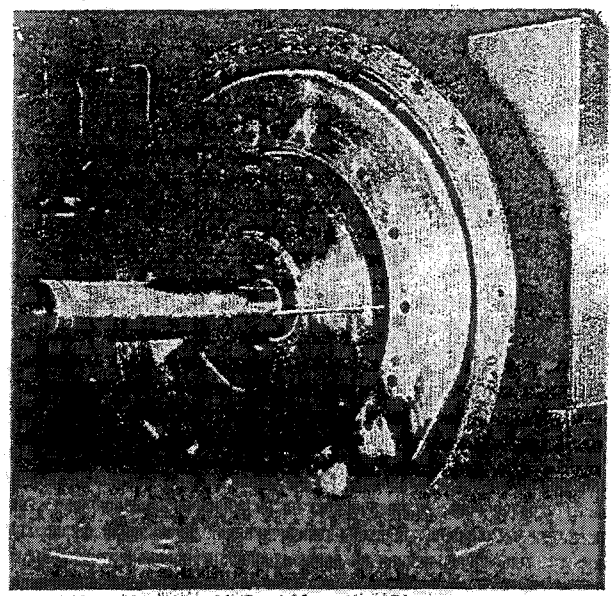

FIGURE 1 - Bearing Oil Seal Mounting Plate

© THE TRANE COMPANY 1984
COMMERCIAL SYSTEMS GROUP
LA CROSSE, WISCONSIN 54601-7599
PRINTED IN U.S.A.

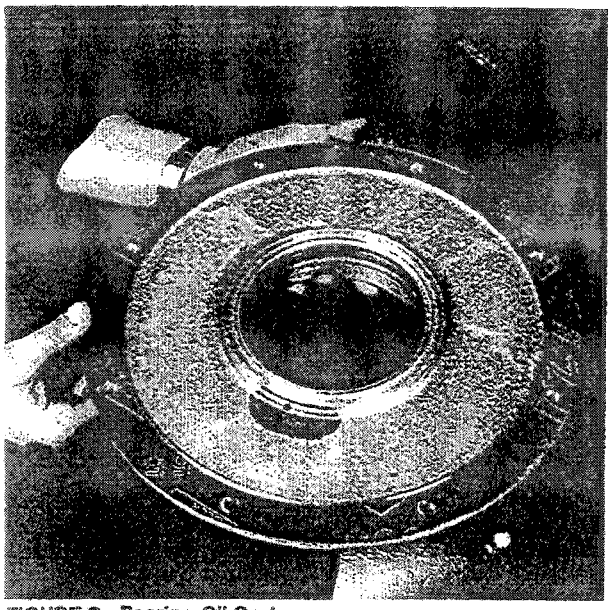

FIGURE 2 - Bearing Oil Seal

b. Install the seal with new gasket and tab or ramp washers and bolts. INSTALL THE SEAL WITH THE OIL DRAIN HOLE IN THE BACKSIDE OF THE SEAL FACING DOWN AND TOWARDS THE MOTOR. See Figure 2.
c. Tighten the retaining bolts very lightly.
d. Set the seal-to-shaft clearance at 0.002 inches minimum and 0.004 inches maximum. See Figures 4 and 5.
e. Tighten the retaining bolts to 24 ft.-lbs. and then recheck the clearance.
f. Bend the tabwashers to secure the bolts. See Figure 6.

3. Install the third stage impeller. See Figure 7.

a. Clean the impeller, compressor shaft, impeller key and shims to remove all dirt, debris, oxidation, etc. Examine the impeller carefully for defects. Inspect the keyway

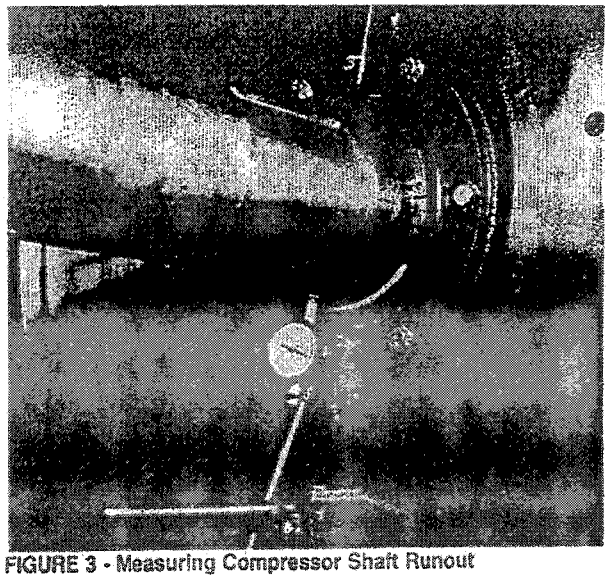

FIGURE 3 - Measuring Compressor Shaft Runout

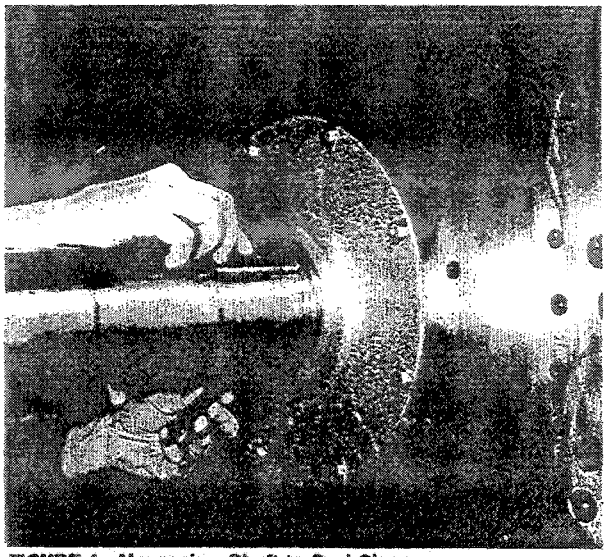

FIGURE 4 - Measuring Shaft to Seal Clearance

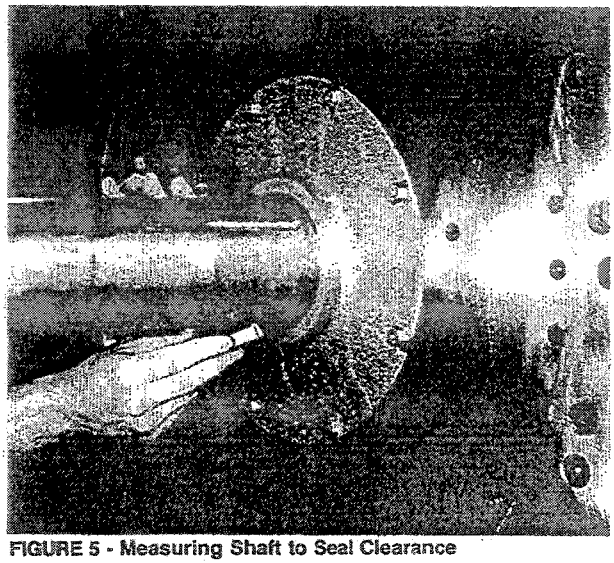

FIGURE 5 - Measuring Shaft to Seal Clearance

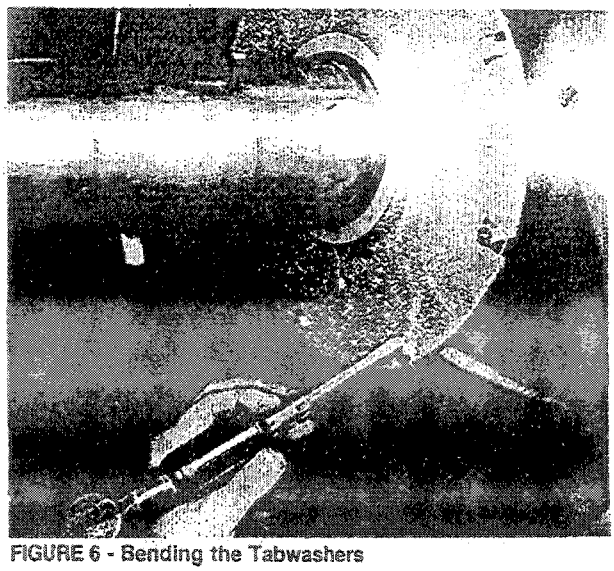

FIGURE 6 - Bending the Tabwashers

TABLE 1 - Clearances

IMPELLER SEAL RING CLEARANCE			
COMPR SIZE	1ST STG	2ND STG	3RD STG
013 thru 014	.0295/.0195	.024/.0165	.024/.0165
015 thru 020		.0295/.0195	
022			.0295/.0195
023 thru 032	.033/.022		
035		.033/.022	
036 thru 045	.0365/.0245		
049 thru 050			.033/.022
055		.0365/.0245	
056 thru 071	.043/.0285		
079 thru 080			.0365/.0245
089 thru 112	.046/.031	.043/.0285	
125			.043/.0285
SHAFT TO SEAL CLEARANCES 1ST STAGE — 0.018/0.024 IN. 2ND STAGE — 0.018/0.024 IN. 3RD STAGE — 0.002/0.004 IN.			

TABLE 2 - Dimension Tolerances (Width), Key and Shaft and Impeller Keyways

	MINIMUM/MAXIMUM DIMENSION (INCHES)
Key	0.498/0.500
Shaft Keyway	0.5005/0.5035
Impeller Keyway	0.5010/0.5030

with dye penetrant for indication of cracks. Use the following dye penetrant components to inspect the impeller (Table 2 provides key and keyway tolerances):
- Manufacturer: Magnaflux
- Brand name: "SpotCheck"
- Penetrant number: SKL-HF/SKL-S
- Developer number: SKVD-NF
- Cleaner number: SKC-NF

Discard the impeller if cracks are found. Do not attempt to repair any cracks in an impeller. Examine the seal surface of the impeller for defects. If there are scratches deeper than 1/16-inch, replace the impeller.

b. Measure the shaft outside diameter and the impeller bore inside diameter. The clearance must be not less than 0.0005 inches or greater than 0.0025 inches.
c. Lubricate the shaft and impeller bore with "Lubriplate" or equivalent.
d. Slide the impeller on the shaft.
e. Add shims as necessary to line up the innermost discharge surface of the impeller with the diffuser plate as shown in Figure 8. The surfaces must be level with one another or, at most, the impeller surface may be no more than 0.005 inches above the diffuser plate surface.
f. Insert the impeller key and install the impeller with the keyway in the up position.
g. Measure the impeller nose runout. Mount the dial indicator as shown in Figure 9. Also check the runout at the very end of the shaft to insure that the shaft is true. This procedure is outlined in Step 2. Rotate the impeller by hand and observe the dial indicator. The maximum allowable nose runout on the impeller is 0.003 inches. If the runout exceeds this amount the shims should be inspected for the presence of foreign material. Refer to Figure 10. Recheck the runout. Replace the impeller if runout is still excessive.

4. Install the third stage suction cover casting. Align the scribe marks which were made during disassembly. See Figure 11.
   a. Clean dirt, debris and oxidation from the suction cover. Use a solvent which leaves no residue such as Virginia 10 or equivalent. Clean the O-ring groove. There should not be any nicks or chips in the O-ring groove which might deform the O-ring. Remove all old sealing compound from the O-ring groove. Clean the mating surface also.
   b. Apply LocTite 515 "Gasket Eliminator" to the O-ring groove (1/8-inch bead). Insert the new O-ring in the groove and then apply some sealer to the exposed area of the O-ring.
   c. Use guide rods to position the cover. Insert the retaining bolts to secure the cover, remove the guide rods and then tighten the retaining bolts to 150 ft.-lbs.
5. Install the impeller nose seal.
   a. Clean the seal to remove all dirt and debris. Inspect the labyrinth grooves for wear or damage. Replace the seal if cracked, warped or worn beyond clearance tolerances. Clearance specifications are found in Table 1.
   b. If the seal is reused, be sure it is installed with the TOP in the proper position.
   c. Install the seal and lightly tighten the bolts with rampwashers in place.
   d. Set the seal radial clearance according to Table 1. If the new seal clearance is too tight, the seal may be lightly sanded with sandpaper to achieve the proper clearance. See Figure 12.
   e. Tighten the seal bolts to 24 ft.-lbs. and recheck the radial clearance. Readjust as necessary.
6. Install the third stage inlet vane assembly. Refer to Figure 14.
   a. Clean the assembly with solvent and a lint-free rag. If any of the inlet vane assembly components are worn excessively, replace the assembly.
   b. Lift the assembly into place using a nylon sling or cable through the center of the assembly.
   c. Install two 3/8-inch guide pins through the holes in the inlet vane assembly plate and into the third stage suction cover. The guide pins are used to help locate the inlet vane assembly and then the second stage diffuser plate. See Figures 14, 15 and 18. Install the vane assembly with the TOP in the proper position. Position the inlet vane assembly on the suction cover casting and secure with the 1/4"-20 flathead screws. See Figure 15.
   d. With the inlet vane assembly installed, the vane operator arm will be visible through the tang operator hole. See Figure 16.
   e. Tighten the 1/4"-20 flathead screws to 6 ft.-lbs. torque. The head of these screws must not protrude into the diffuser passage. See Figure 15.

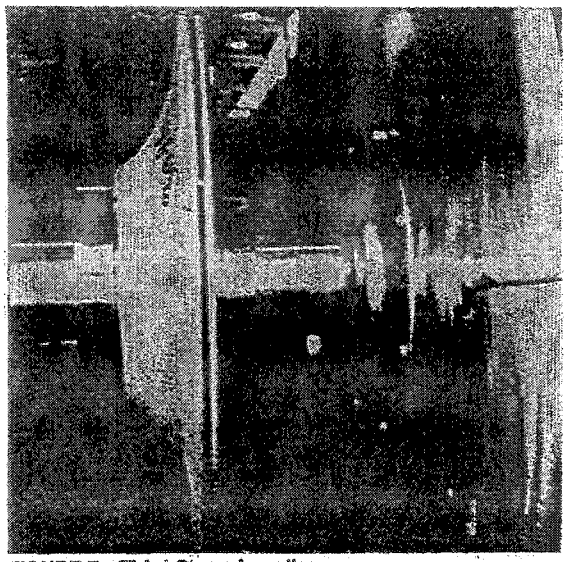

FIGURE 7 - Third Stage Impeller



FIGURE 8 - Aligning Third Stage Impeller Discharge with Diffuser Plate

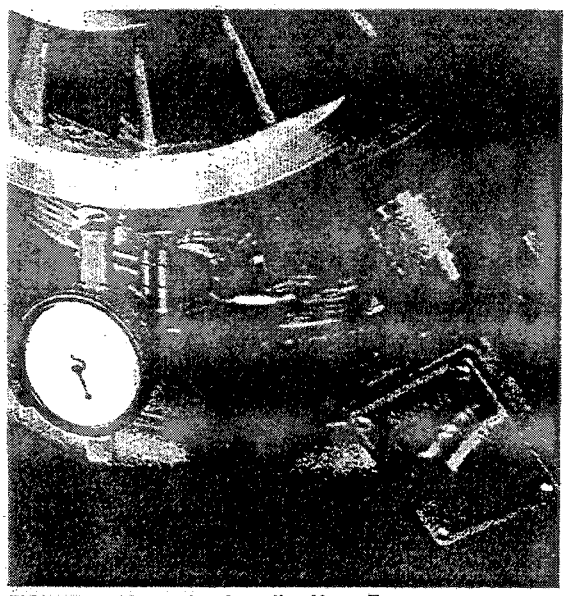

FIGURE 9 - Measuring Impeller Nose Runout

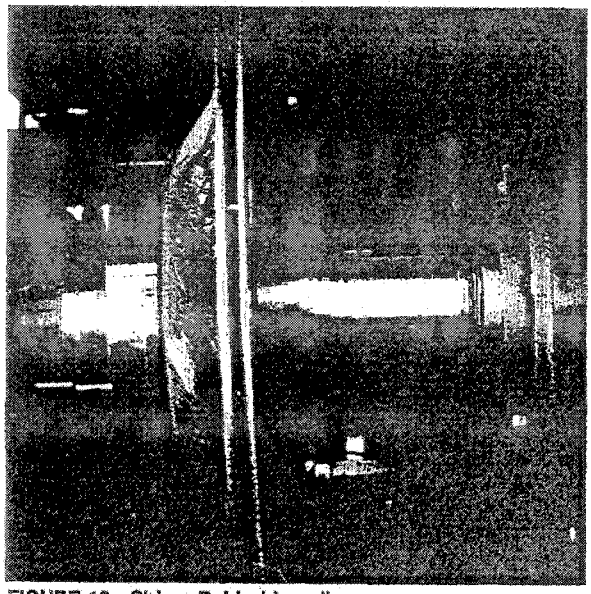

FIGURE 10 - Shims Behind Impeller

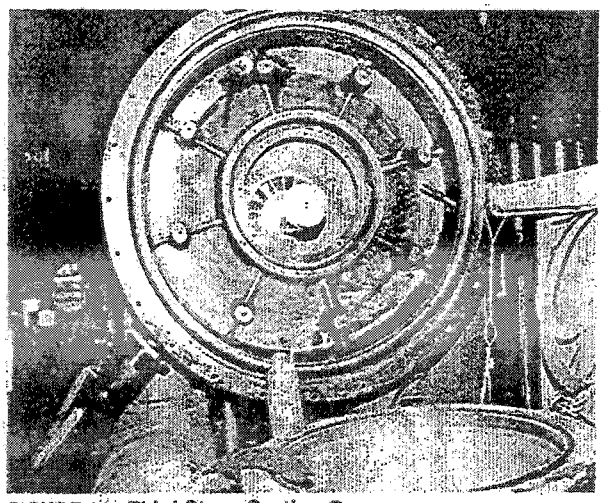

FIGURE 11 - Third Stage Suction Cover

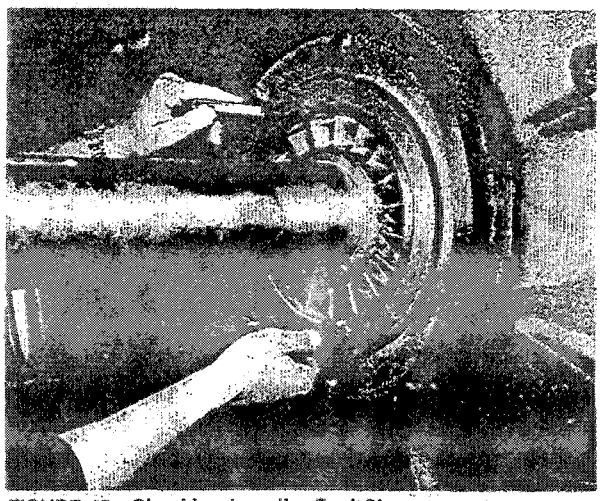

FIGURE 12 - Checking Impeller Seal Clearance

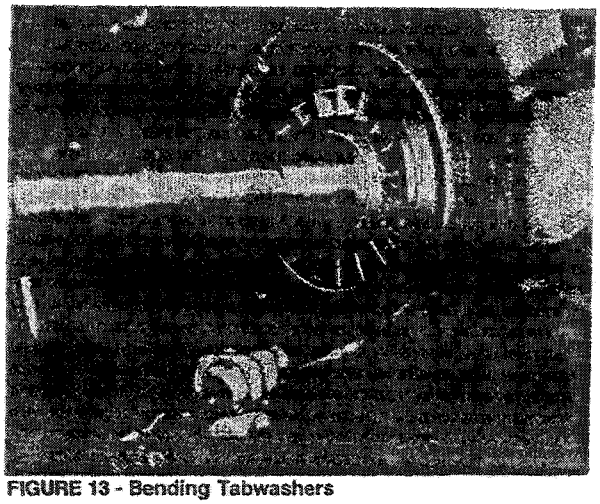

FIGURE 13 - Bending Tabwashers

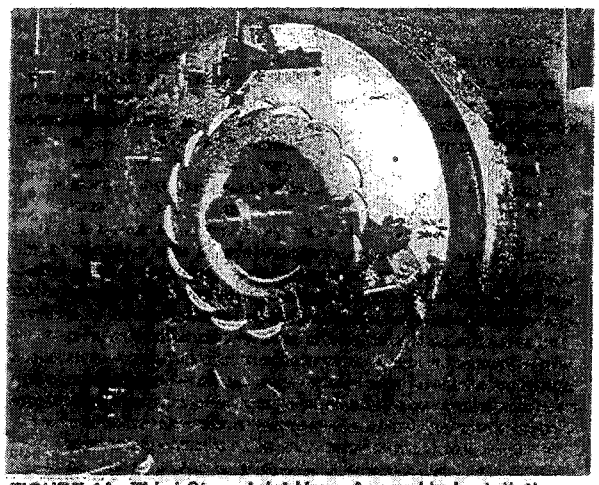

FIGURE 14 - Third Stage Inlet Vane Assembly Installation

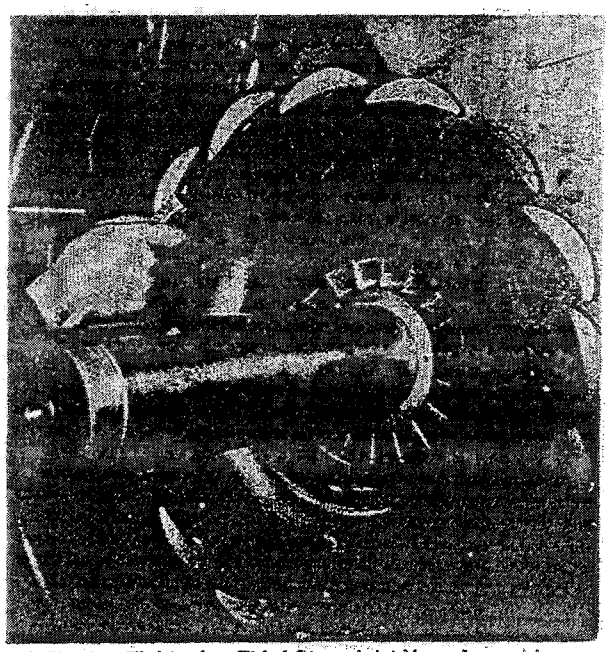

FIGURE 15 - Tightening Third Stage Inlet Vane Assembly Retaining Screws



FIGURE 16 - Inlet Vane Operator

f. Install the shim that was between the spacer and the impeller. The steel shim is necessary to prevent aluminum-to-aluminum contact. If no shim was in place, use a 0.020-inch shim and realign the impeller discharge with the diffuser plate as instructed in Step 11D.

7. Install the third stage vane operator assembly.

   a. Clean the operator assembly with solvent and lint-free rag.
   b. Insert the vane operator into the suction cover and connect to the inlet vanes. Use a new gasket on the operator flange. Refer to Figure 16.
   c. Tighten the retaining bolts to approximately 60 ft.-lbs. or until the gasket just begins to extrude from between the flanges.
   d. Operate the vane assembly with the external operator to verify that the assembly works and is properly positioned.

8. Install the second stage diffuser plate. Make sure the TOP is positioned properly.

   a. Clean the plate and mating surface to remove all dirt, debris, oxidation, etc. Use solvent and a lint-free rag.
   b. Using guide rods, move the diffuser plate into position. Use the second stage impeller to center the plate. There must be equal distance around the impeller. With the diffuser plate centered around the impeller and shaft secure the diffuser plate with socket-head capscrews and tighten to 24 ft.-lbs. Refer to Figure 19. Minimum radial clearance between the impeller and diffuser plate is 0.030 inches.

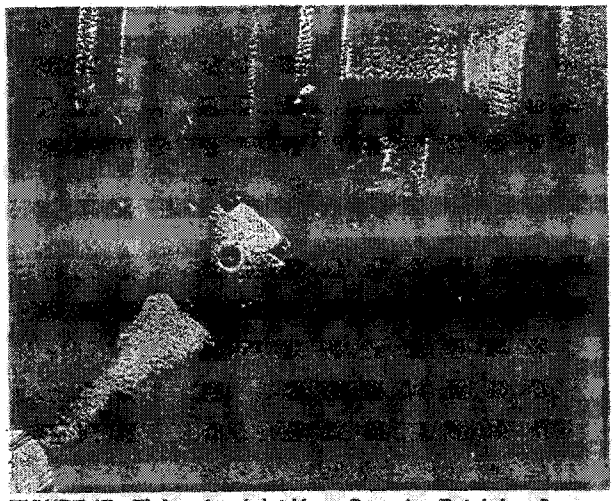

FIGURE 17 - Tightening Inlet Vane Operator Retaining Screws

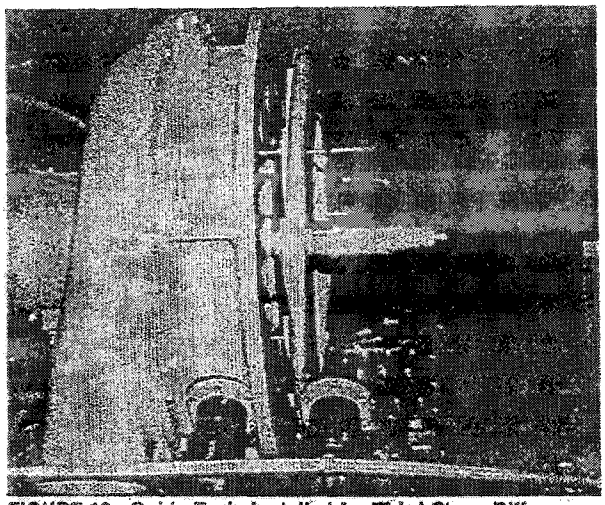

FIGURE 18 - Guide Rods Installed for Third Stage Diffuser Plate Installation

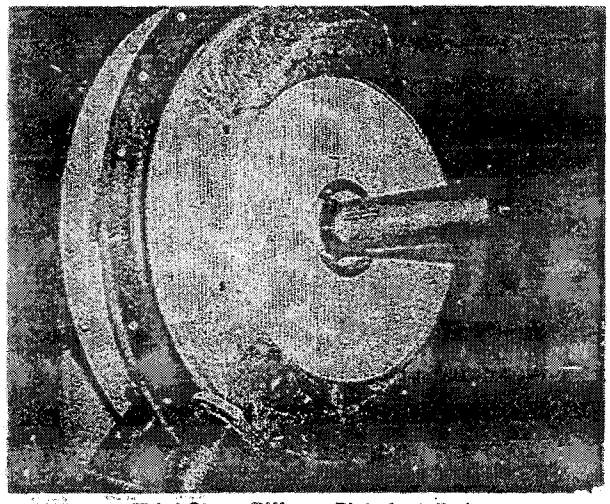

FIGURE 19 - Third Stage Diffuser Plate Installed

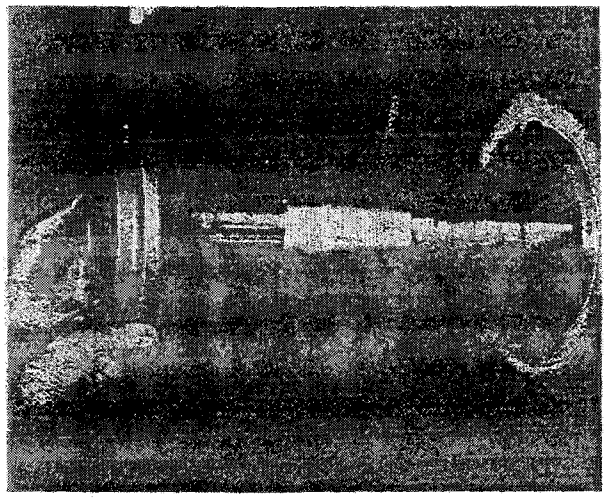

FIGURE 20 - Impeller Spacer Installation

9. Install the impeller spacer. See Figure 20.
   a. Thoroughly clean the spacer.
   b. Lubricate the spacer with compressor oil.
   c. Install the spacer with the pull-off holes away from the motor and align the reference mark made during disassembly. See Figure 21.
10. Install the second stage shaft seal.
   a. Clean the seal and inspect the labyrinth grooves for excessive wear.
   b. Install the seal with the TOP in the correct position. Refer to Figure 20.
   c. Secure the seal loosely with bolts and tab or ramp washers.
   d. Set the seal clearance at 0.018 inches minimum and 0.024 inches maximum radial clearance. See Figure 22.
   e. If a new seal is used and the clearance is too tight — the seal may be lightly sanded with sandpaper to achieve the required clearance.
   f. After the proper clearance is set, tighten the retaining bolts to 24 ft.-lbs.
   g. Recheck the seal clearance. Reposition as necessary.
11. Install the second stage impeller.
   a. Thoroughly clean the impeller and compressor shaft. Use a solvent and lint-free rag. Inspect the impeller for wear, cracks, warpage, etc. Examine the seal surface of the impeller for scratches. If there are any scratches deeper than 1/16-inch, discard the impeller. Use dye penetrant as described in Step 3. Table 2 provides keyway dimensions.
   b. Measure the inside diameter of the impeller shaft bore and the outside diameter of the shaft. The clearance between the components must be not less than 0.0005 inches or greater than 0.0025 inches.
   c. Lubricate the impeller bore with compressor oil or Lubriplate.
   d. Add shims as necessary behind the impeller to line up the innermost discharge surface of the impeller with the diffuser plate surface. The surfaces must be level with one another or at most the impeller surface may be no more 0.005 inches above the surface of the diffuser plate. See Figure 24. Insert the key and install the impeller with the keyway up. See Figure 25.



FIGURE 21 - Spacer Pull-Off Holes

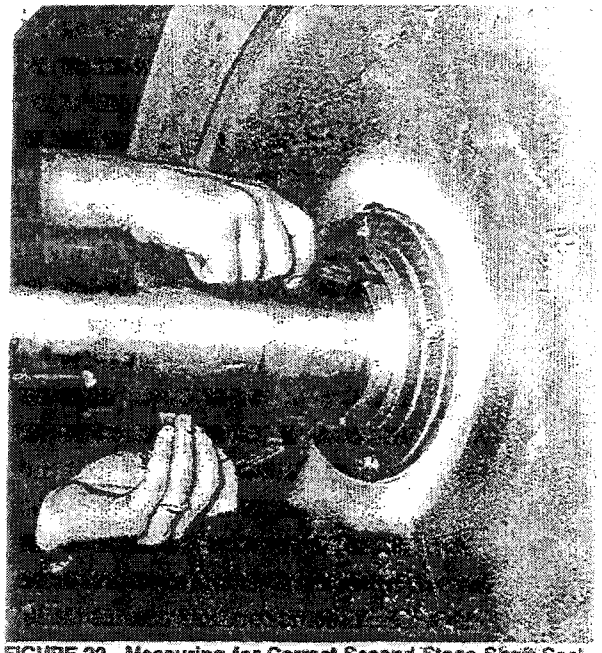

FIGURE 22 - Measuring for Correct Second Stage Shaft Seal Clearance

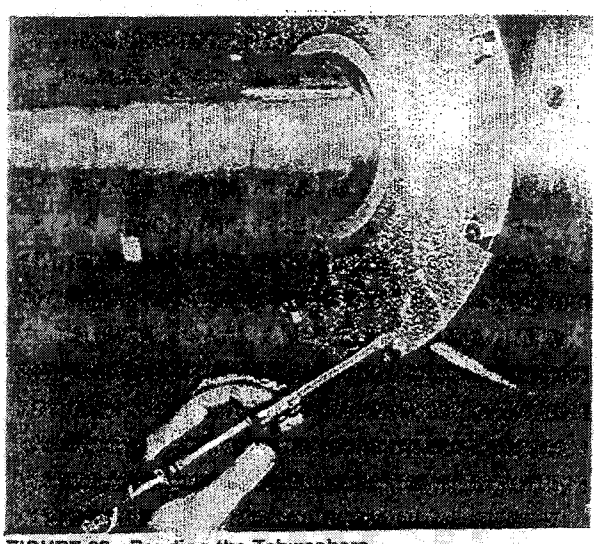

FIGURE 23 - Bending the Tabwashers

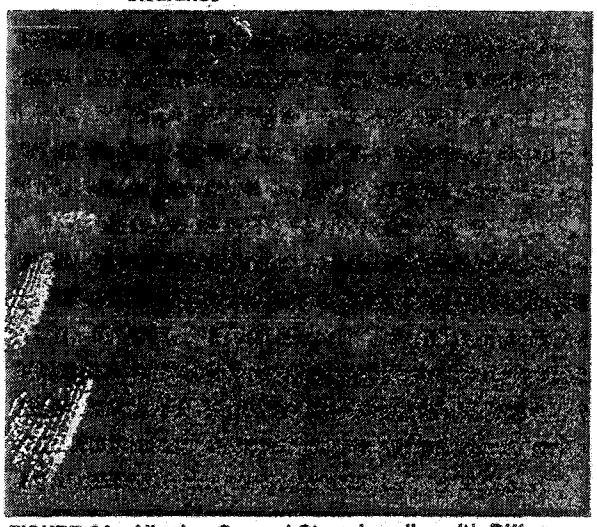

FIGURE 24 - Aligning Second Stage Impeller with Diffuser Surface



FIGURE 25 - Impeller Key and Impeller

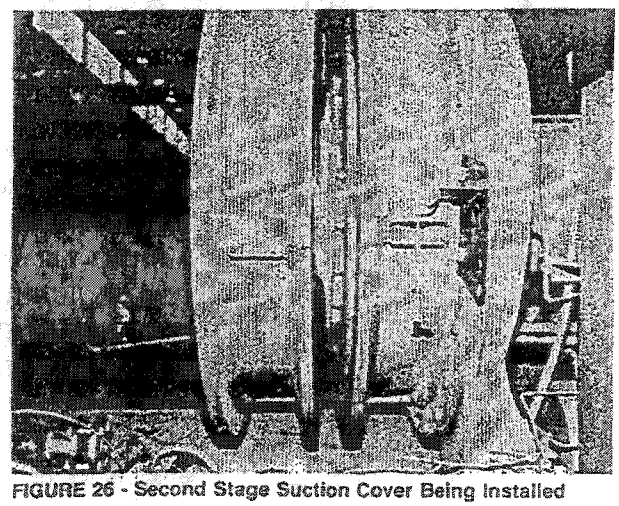

FIGURE 26 - Second Stage Suction Cover Being Installed

1. Thoroughly clean all surfaces. Clean the O-ring grooves. Use solvent (Virginia 10 or equivalent).
2. Apply a 1/8-inch bead of LocTite 515 "Gasket Eliminator" to the O-ring groove in the suction cover. Insert the O-ring, then apply the sealant to the exposed area of the O-ring.
3. Lift the suction cover and using guide rods move it into position. Do not bump or damage the impeller or shaft during this process.
4. Install the suction cover retaining bolts and tighten them to 150 ft.-lbs.

12. Measure the impeller nose runout by mounting a dial indicator as shown in Figure 28. Rotate the impeller by hand and observe the dial indicator. The nose runout tolerance is 0.003 inches. If the runout exceeds 0.003 inches, look for burrs or debris between the impeller shims. Recheck the runout. Replace the impeller if runout is still excessive.

13. Install the second stage impeller nose seal. Refer to Figure 29.

    a. Thoroughly clean the seal and examine the labyrinth grooves for excessive wear. Any damage that will cause the impeller seal clearance to be out of tolerance requires that the seal be replaced.

    b. Install the seal with the TOP properly positioned. Lightly tighten the 3/8"-16x1" bolts with rampwashers.

    c. Set the seal clearance according to Table 1. See Figure 30.

    d. Tighten the retaining bolts to 24 ft.-lbs. and then recheck the clearance. Readjust the clearance as necessary to achieve the proper clearance. If the clearance is too tight, the seal may be lightly sanded to achieve the proper clearance.

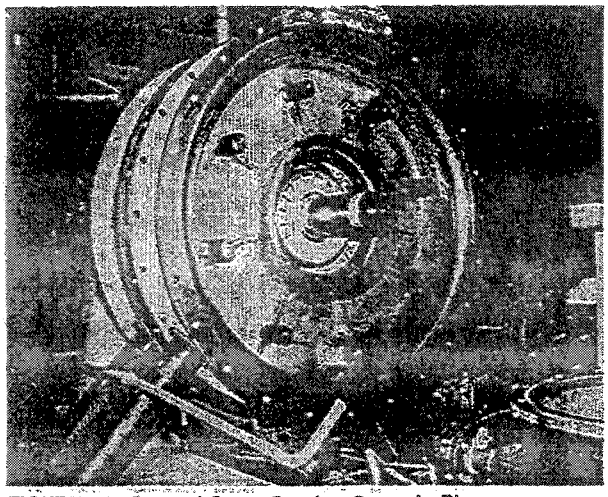

FIGURE 27 - Second Stage Suction Cover in Place

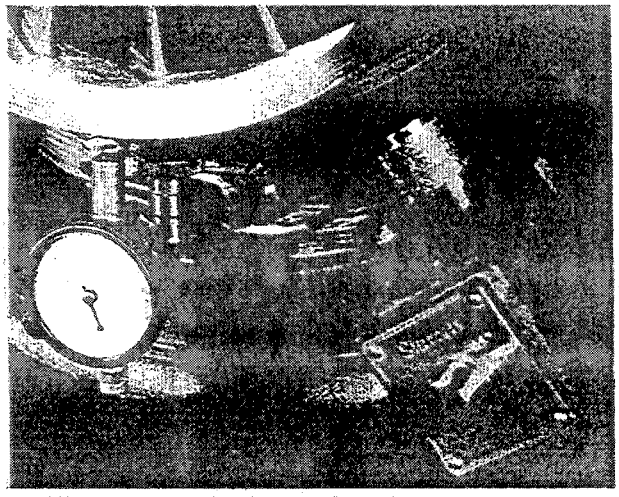

FIGURE 28 - Measuring Second Stage Impeller Nose Runout

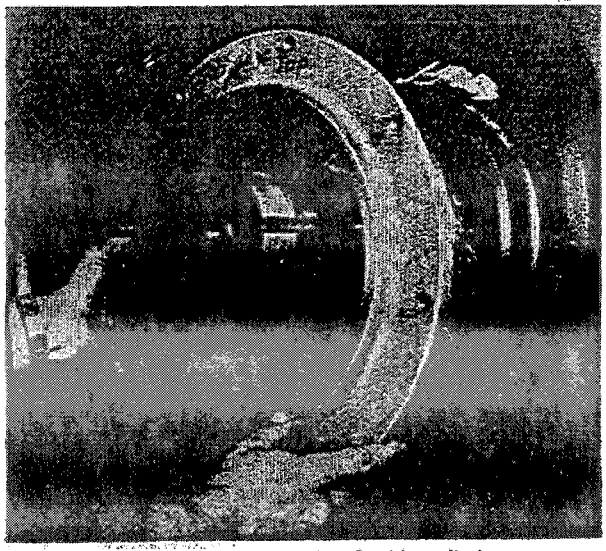

FIGURE 29 - Second Stage Impeller Seal Installation

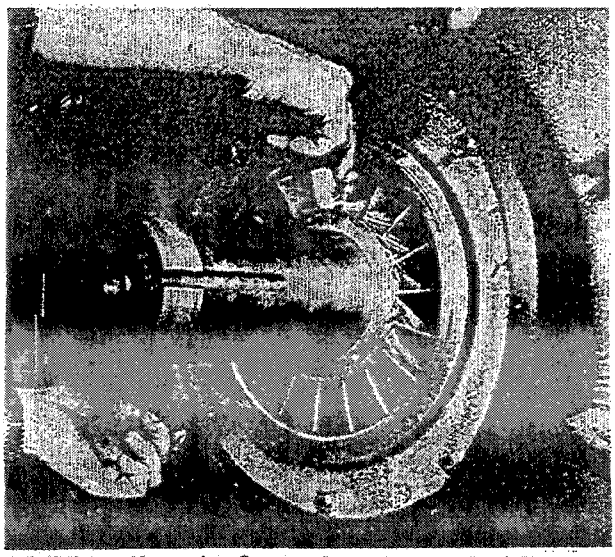

FIGURE 30 - Measuring Second Stage Impeller Seal Clearance

14. Install the second stage vane shroud. See Figure 31.

    a. Clean the shroud and all mating surfaces using solvent (Virginia 10 or equivalent) and a lint-free rag.
    b. This component may be lifted using a nylon sling or cable through the center of the shroud. Lift the shroud up and onto the 3/8"-16 guide pins.
    c. Install the shroud with the TOP correctly positioned.
    d. Tighten the 1/4"-20x3/4" flathead screws to 6 ft.-lbs. The heads of these screws must not protrude into the diffuser passage. Note that the inlet vanes on the shroud are fixed and are not moveable.
    e. Install the shim that was between the spacer and the impeller. The steel shim is necessary to prevent aluminum-to-aluminum contact. If no shim was in place, use a 0.020-inch shim and realign the impeller discharge with the diffuser plate as instructed in Step 11D.

15. Install the first stage diffuser plate. See Figure 32.

    a. Clean the plate and all mating surfaces using solvent (Virginia 10 or equivalent) and a lint-free rag.
    b. Use a rope or nylon sling to lift plate and guide rods to move the plate into place with the TOP up. See Figure 33.
    c. Use the first stage impeller to help position the diffuser plate. See Figures 34 and 35. The diffuser plate must be centered with respect to the impeller. The diffuser will have to be raised to center it. Use feeler gauges to obtain equal clearance around the impeller. The minimum clearance is 0.030 inches.
    d. With the plate in the proper position, tighten the socket head capscrews to 24 ft.-lbs.

NOTE: THE FOLLOWING PROCEDURE IS FOR CVHE 089 THROUGH 125 UNITS ONLY. Refer to Figure 62, Detail A.

    a. Install the spacer ring. (CVHE 089 and 090 units only).
    b. Install the spacer sleeve and align the reference marks made during disassembly. This spacer is very similar to the impeller spacer used in Step 16 except that it makes the step for shaft reduction.
    c. Proceed with Step 17.

16. Install the impeller spacer.

    a. Thoroughly clean the spacer with solvent (Virginia 10 or equivalent) and a clean lint-free rag.
    b. Lubricate the spacer with compressor oil.
    c. Install the spacer with the pull-off holes away from the motor and align the reference marks made during disassembly.

17. Install the first stage shaft seal. Refer to Figure 37.

    a. Clean the seal and all mating surfaces using solvent (Virginia 10 or equivalent) and a lint-free rag. Examine the labyrinth grooves for excessive wear. If the seal is found to be outside of the specifications given in Table 1, replace the seal.
    b. Install the seal with the TOP correctly positioned. Lightly tighten the retaining bolts with ramp washers. Refer to Figure 38.
    c. Set the seal clearance at between 0.018 inches minimum and 0.024 inches maximum. See Figure 39.
    d. Tighten the bolts to 24 ft.-lbs. and recheck the clearance. Readjust the clearance as necessary. If the seal is new and the clearance is too tight, the seal may be lightly sanded with sandpaper to achieve the proper clearance.

18. Install the first stage impeller. See Figure 40.

    a. Clean the impeller and compressor shaft. Inspect the impeller for wear, cracks, warpage and scratches on the seal surface. If there are scratches deeper than 1/16-inch, replace the impeller. Inspect the impeller keyway using dye penetrant as described in Step 3. Table 2 gives proper keyway dimensions.
    b. Measure the impeller bore inside diameter and the shaft outside diameter. The clearance must be not less than 0.0005 inches or greater than 0.0025 inches.
    c. Lubricate the impeller bore or the shaft with compressor oil. Insert the key and then install the impeller with the keyway up.
    d. Add shims as necessary to align the inner discharge surface of the impeller with the first stage diffuser plate surface. The surfaces must be level with one another or at most, the impeller surface may be no more than 0.005 inches above the diffuser plate surface. Also recheck the impeller to diffuser plate radial clearance. The clearance between the impeller and diffuser plate must be no less than 0.030 inches. See Figures 41 and 42.

19. Install the spacer if provided.

20. Install the spring washer.

***NOTE:** The spring washer must be installed so that it compresses and flattens towards the impellers. Therefore, the tapered portion must be such that it tapers towards the compressor motor.*

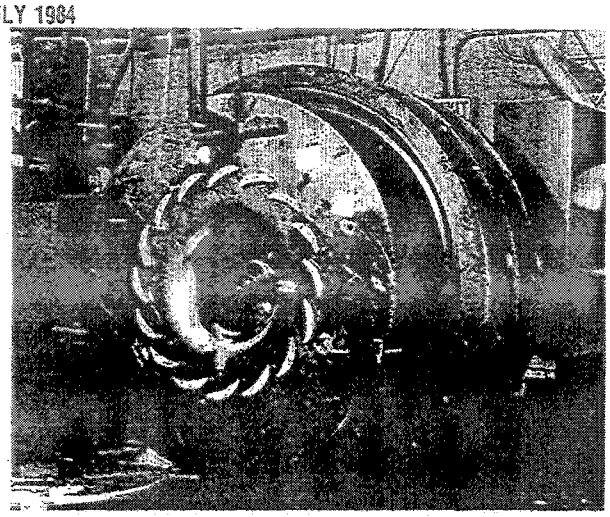

FIGURE 31 - Second Stage Vane Shroud Installation

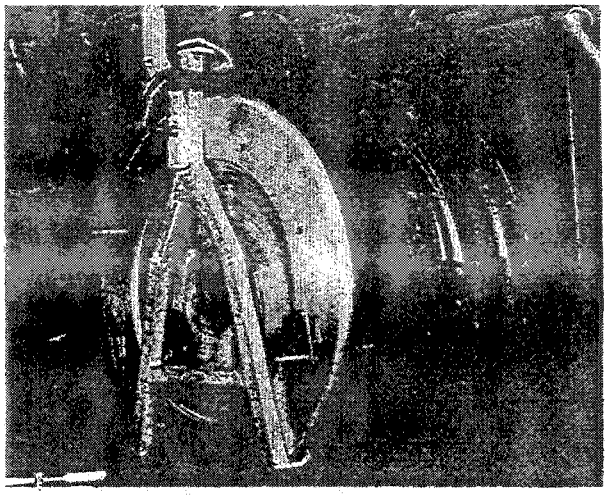

FIGURE 32 - First Stage Diffuser Plate Installation

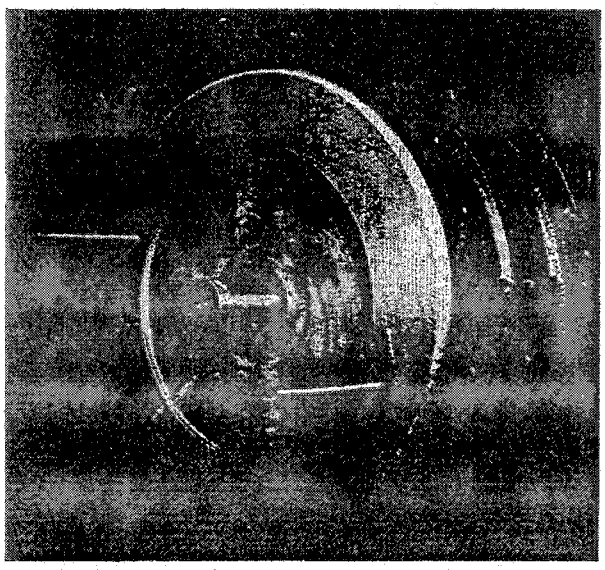

FIGURE 33 - Second Stage Diffuser Plate in Position

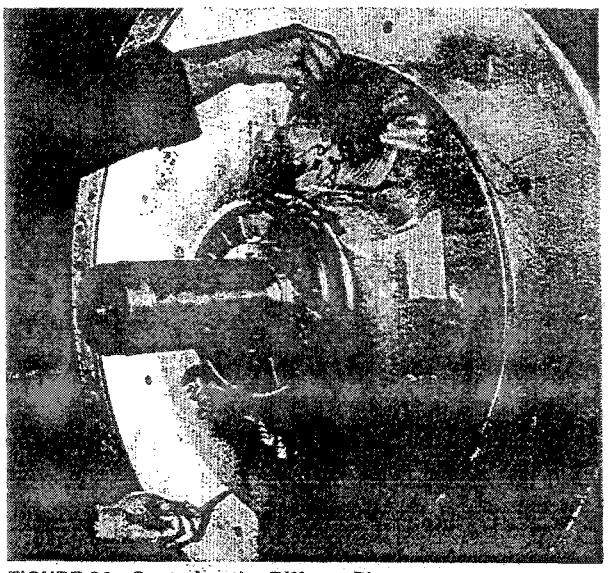

FIGURE 34 - Centering the Diffuser Plate

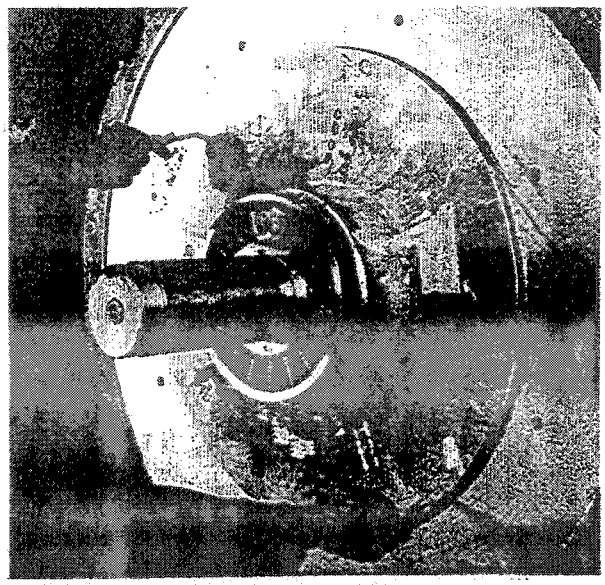

FIGURE 35 - Centering the Diffuser Plate

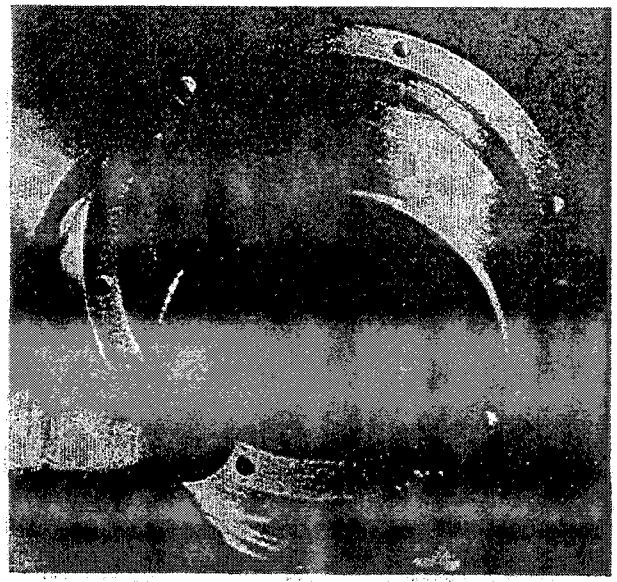

FIGURE 36 - Impeller Spacer Detail Showing Pull-Off Holes

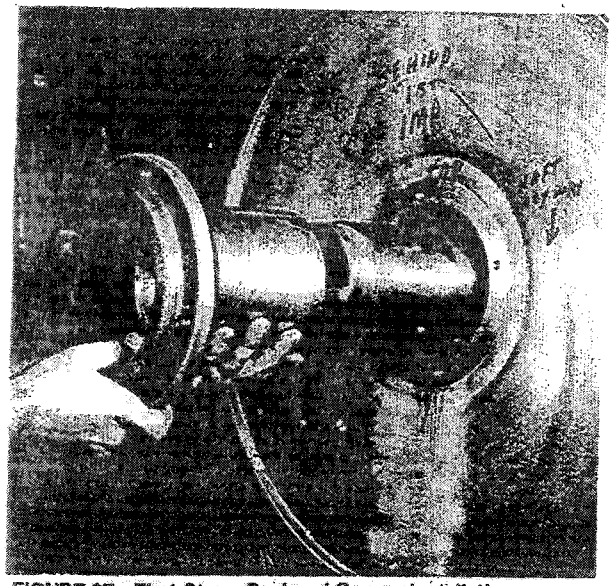

FIGURE 37 - First Stage Seal and Spacer Installation



FIGURE 38 - First Stage Seal Installation

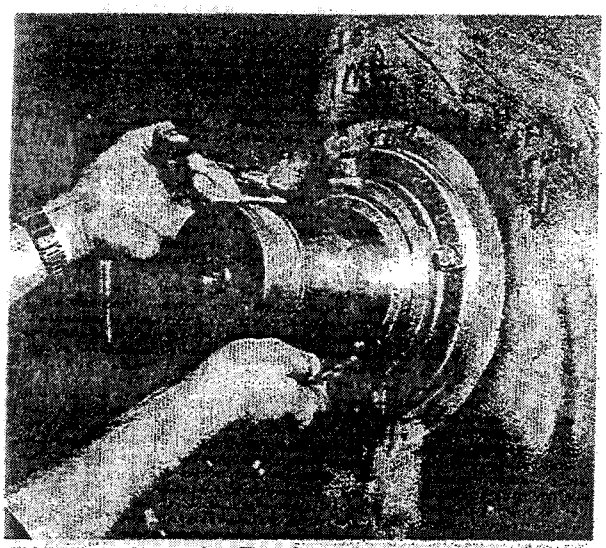

FIGURE 39 - Measuring First Stage Seal Clearance

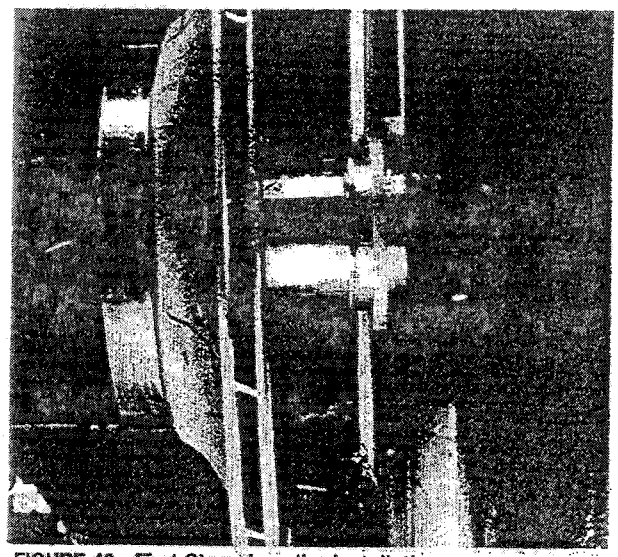

FIGURE 40 - First Stage Impeller Installation

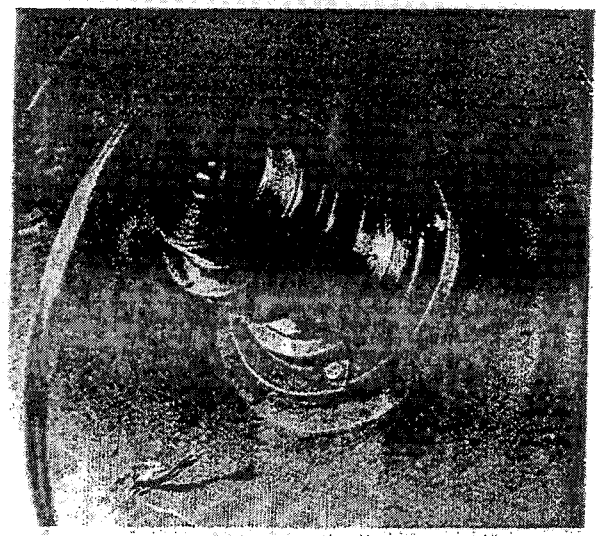

FIGURE 41 - Impeller Shims

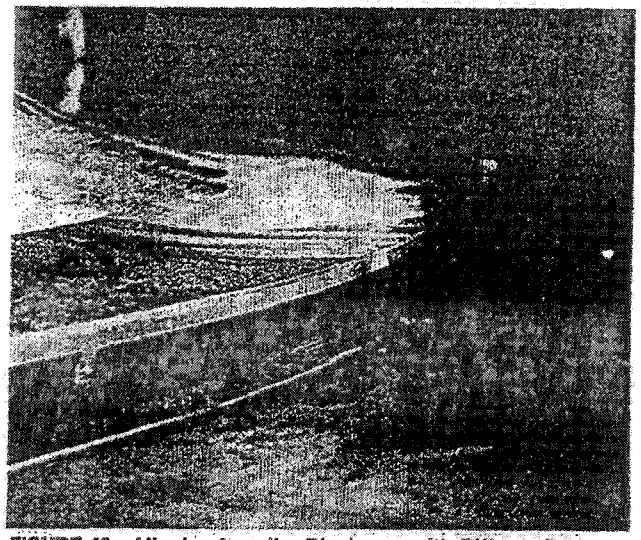

FIGURE 42 - Aligning Impeller Discharge with Diffuser Plate

21. Install the lockwasher and locknut. See Figure 43.

    a. The locknut can be selected by use of the following chart. Refer to the appropriate parts list for proper identification. The balance locknut must fit properly on the shaft for proper operation. Proper fit is achieved when the locknut selected is turned on the shaft four or five threads and no looseness can be felt when trying to move the locknut back and forth with slight force. The locknut should require only manual force until it makes contact with the spring washer.
    b. Tighten the locknut to achieve solid metal-to-metal contact. This is approximately 115 ft.-lbs. torque. Care must be taken to compress but not completely flatten the springwasher. Also, the locknut must be positioned such that a lockwasher tab aligns with a slot in the locknut.
    c. Bend over the lockwasher tab into the locknut slot.

CHART 1 - Locknut Usage

REASON FOR REBUILD	STD. LOCKNUT	LOCKNUT USAGE BALANCE LOCKNUT WITH WEIGHTS	NEW BALANCE LOCKNUT*
Non-Rotating Component Replacement (O-Ring, Vanes, Etc.)	X	X (If Originally Equipped)	
Rotating Component Replacement (Impeller, Spacer, Etc.)			X
Motor or Bearing Replacement			X

*The new balance locknut is necessary if the compressor needs to be trim balanced.

22. Measure the first stage impeller nose runout. See Figure 45.

    a. Mount the dial indicator on a solid surface.
    b. Rotate the impeller by hand and observe the dial indicator. The runout must not exceed 0.003 inches. If the runout exceeds this tolerance inspect behind the impeller for burrs or debris between the shims. Recheck the runout. If the runout is still excessive, replace the impeller.

23. Install the first stage suction cover. See Figure 46.

    a. Thoroughly clean the suction cover and all mating surfaces. Clean the O-ring grooves. Use LocTite "Chisel" cleaner.
    b. Apply a 1/8-inch bead of LocTite 515 "Gasket Eliminator" to the O-ring groove. Insert the O-ring and then apply a bead of "Gasket Eliminator" to the exposed portion of the O-ring.
    c. Using the tool shown in Figure 47 and guide pins, move the suction cover into position. Align the scribe marks on the outside of the cover with the scribe marks on the mating surfaces. This will insure proper alignment when the compressor is completely assembled.
    d. Tighten the retaining bolts to 150 ft.-lbs. Remove the guide pins and replace them with the appropriate retaining bolts.

24. Install the first stage impeller nose seal.

    a. Clean the seal and mating surfaces with solvent (Virginia 10 or equivalent) and a clean lint-free rag. Examine the labyrinth groove for excessive wear. If the seal does not meet the clearance specifications given in Table 1, replace the seal.
    b. Install the seal with the TOP correctly positioned. Lightly tighten the retaining bolts with rampwashers in place. See Figure 48.
    c. Set the seal clearance according to Table 1.
    d. Tighten the 3/8"-16x1" bolts to 24 ft.-lbs.
    e. Recheck the seal clearance and readjust the clearance as necessary.



FIGURE 43 - Lockwasher and Locknut

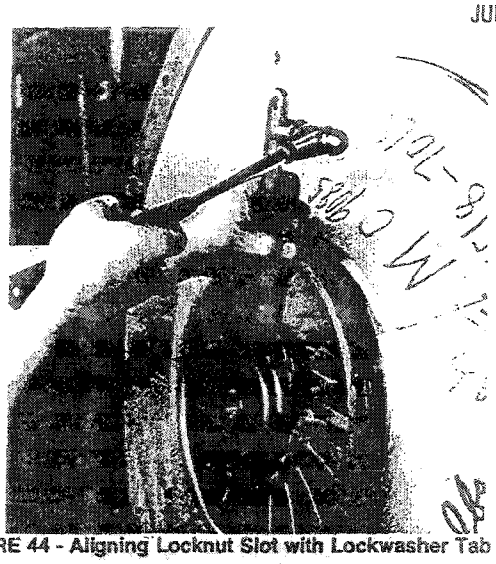

FIGURE 44 - Aligning Locknut Slot with Lockwasher Tab

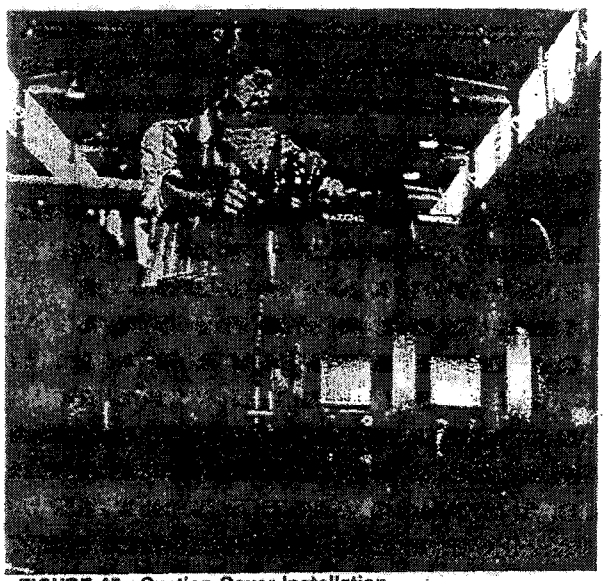

FIGURE 45 - Suction Cover Installation



FIGURE 46 - Suction Cover Lifting Attachment

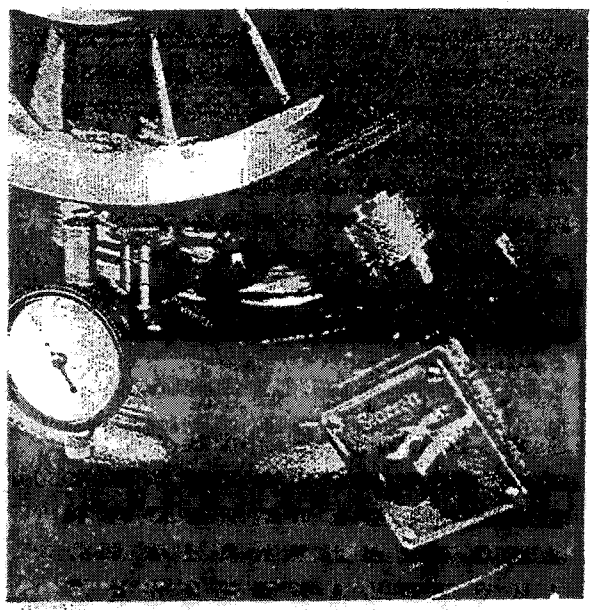

FIGURE 47 - Measuring Impeller Nose Runout

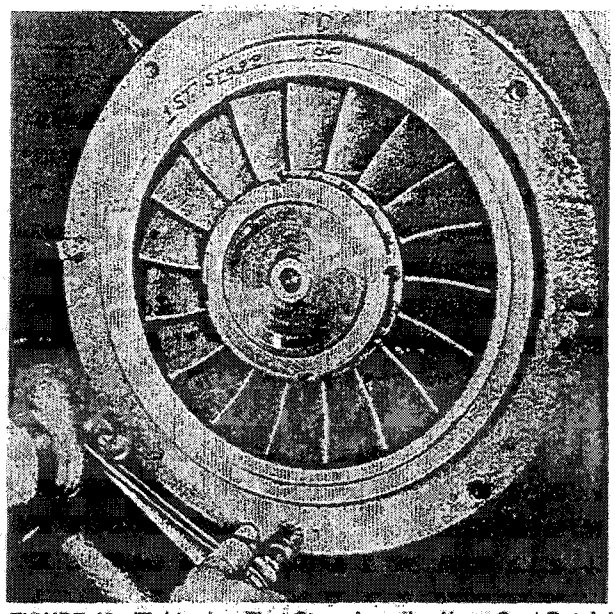

FIGURE 48 - Tightening First Stage Impeller Nose Seal Retaining Bolts

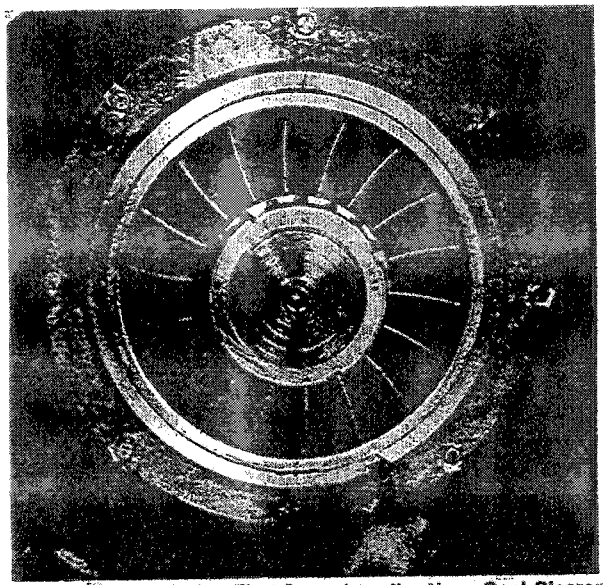

FIGURE 49 - Measuring First Stage Impeller Nose Seal Clearance

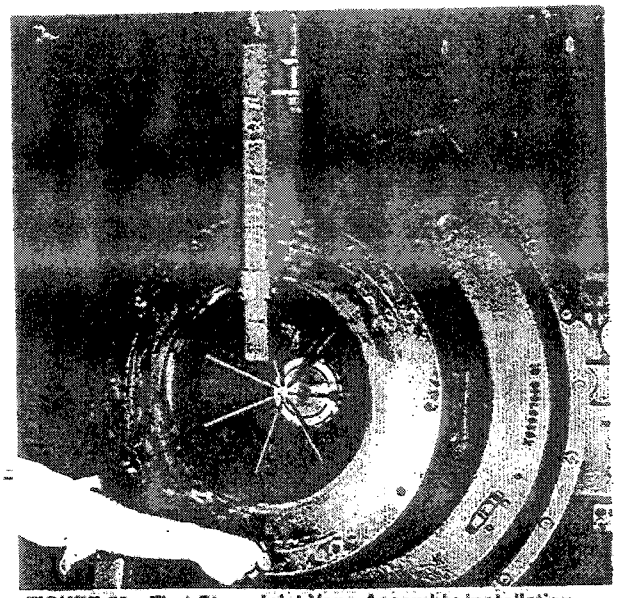

FIGURE 50 - First Stage Inlet Vane Assembly Installation

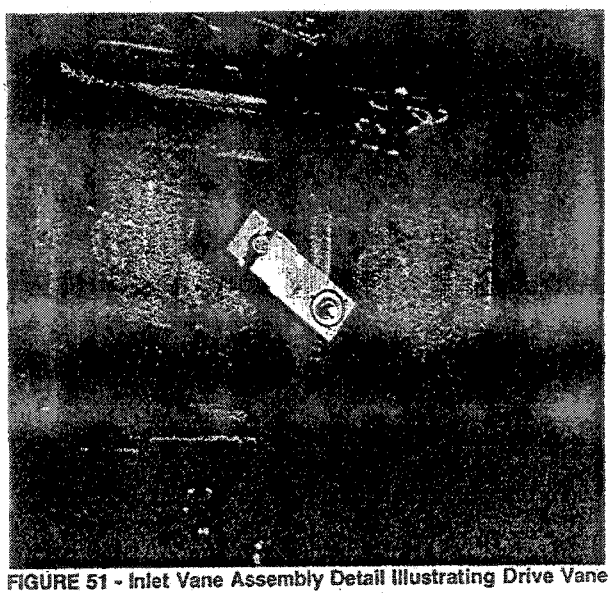

FIGURE 51 - Inlet Vane Assembly Detail Illustrating Drive Vane

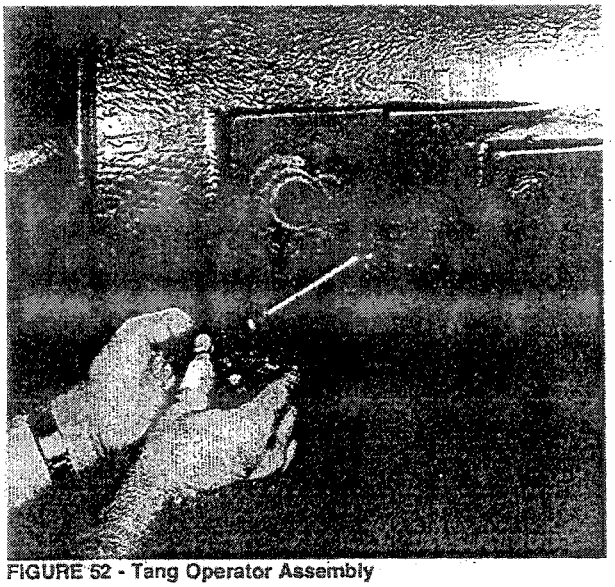

FIGURE 52 - Tang Operator Assembly

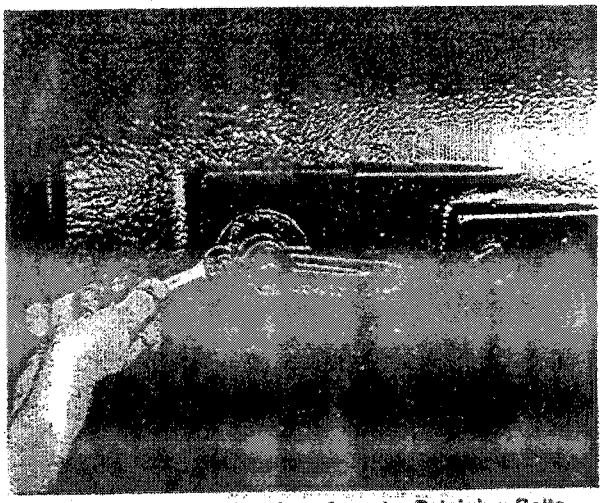

FIGURE 53 - Tightening Tang Operator Retaining Bolts

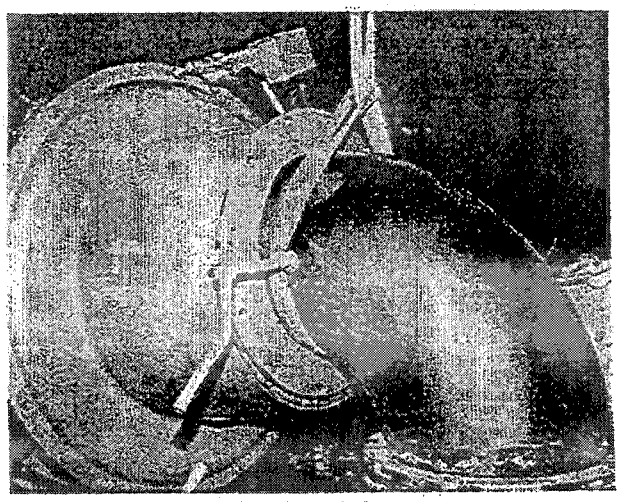

FIGURE 54 - Suction Elbow Installation

25. Install the first stage inlet vanes.
    a. Clean the inlet vane assembly. Inspect the components for excessive wear or damage. Replace as necessary.
    b. Insert the assembly into the suction cover. This may be accomplished using a fixture similar to that shown in Figure 50, or use the following procedure:
        1. Slide one end of a 5-foot section of heavy duty pipe between the vane blades at the top of the vane housing. The pipe should have a small tab welded to it to prevent the assembly from sliding off.
        2. Position a chain or sling around the pipe as close to the vane housing as possible.
        3. The pipe is used as a fulcrum to lift the weight of the assembly and then slide the assembly into the suction cover. This procedure requires two men.

NOTE: The vane assembly will not stay in position without holding it there. It is very possible that the assembly will slide out of position unless it is held there. Exercise proper attention.

    a. Position the inlet vane assembly so that when inserted into the suction cover the tang operator connects with the proper drive vane. See Figure 51.
    b. Secure the assembly with three 5/16"-18x3/8" setscrews. See Figure 50.

26. Insert the tang operator assembly. Refer to Figure 52.
    a. Clean the assembly using solvent and a clean lint-free rag.
    b. Apply a 1/8-inch bead of LocTite 515 "Gasket Eliminator" to the O-ring groove. Insert the O-ring and then apply "Gasket Eliminator" to the exposed portion of the O-ring.
    c. Engage the tang with the vane assembly inside the suction cover.
    d. Secure with three 5/16"-18x1" capscrews. Tighten to 14 ft.-lbs. See Figure 53.
    e. Check for smooth and free inlet vane operation making sure the tang operator is properly positioned.

27. At this point the vibration characteristics of the compressor should be measured. This initial test is an air run with the compressor motor being run at reduced voltage. A final vibration check will be necessary after the chiller is charged with refrigerant and restarted.

28. Install the suction elbow. See Figure 54.
    a. Remove the protective covers which were installed during disassembly.
    b. Clean the suction elbow and all mating surfaces. Pay particular attention to all gasket surfaces and O-ring grooves. Use LocTite "Chisel" cleaner.
    c. Apply a 1/8-inch bead of LocTite 515 "Gasket Eliminator" to the O-ring groove. Insert the O-ring and then apply a bead of "Gasket Eliminator" to the exposed portion of the O-ring.
    d. The suction elbow may be lifted using a sling as shown in Figure 54. Set the suction elbow in place and start tightening the retaining bolts as shown in Figure 55.
    e. Dial indicators should be used as shown in Figure 55 to monitor the horizontal and vertical movement of the compressor. Movement must be less than 0.010 inches. If the movement becomes greater than this, loosen the retaining bolts and start over with the tightening sequence.
    f. Tighten the support bolts at the motor end of the compressor.

29. Reconnect the oil sump vent line. Use a sweat coupling to silver solder the line together. Bleed nitrogen through the line to prevent the formation of oxides which will contaminate the lubrication system.

30. Reattach the control panel support bracket. See Figure 56.

31. Reattach the suction cover drain line. See Figure 57.

32. Reconnect the inlet vane actuator and linkages. Move the linkages by hand to assure proper operation.

33. Reinstall and reconnect the economizer. See Figure 58. Clean all mating surfaces prior to reassembly. Use new gaskets.

34. After the compressor is completely reassembled, the chiller must be restarted as if it were a new chiller. This includes pressure testing the chiller, evacuation, charging and all other procedures included in the initial start-up of a new chiller.

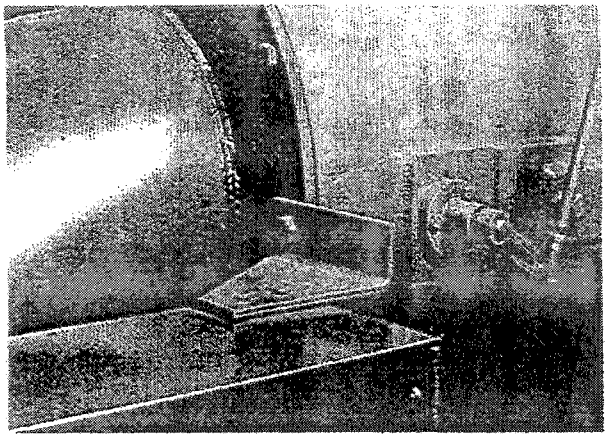

FIGURE 55 - Control Panel Support Bracket

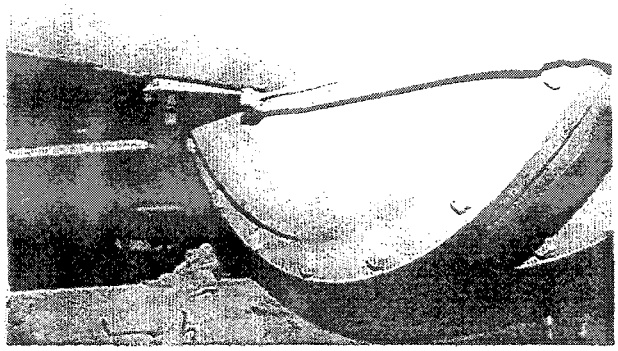

FIGURE 56 - Suction Cover Drain Line



FIGURE 57 - Installing the Economizer

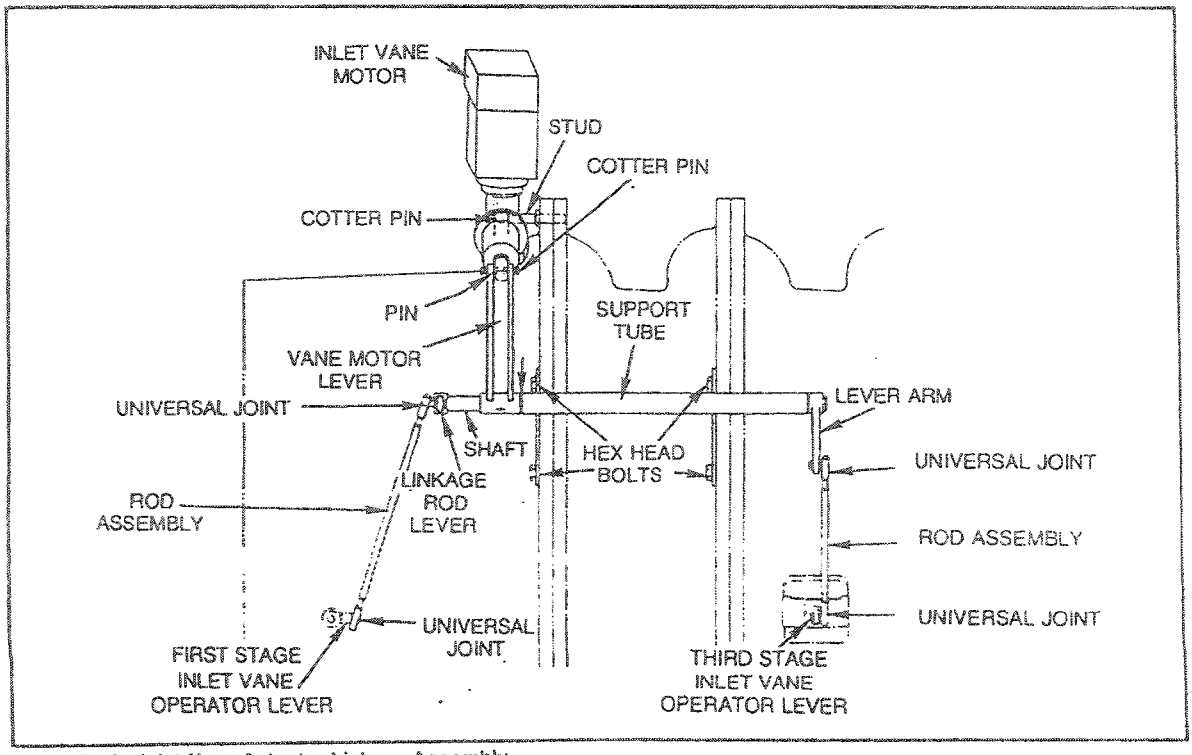

FIGURE 58 - Inlet Vane Actuator Linkage Assembly

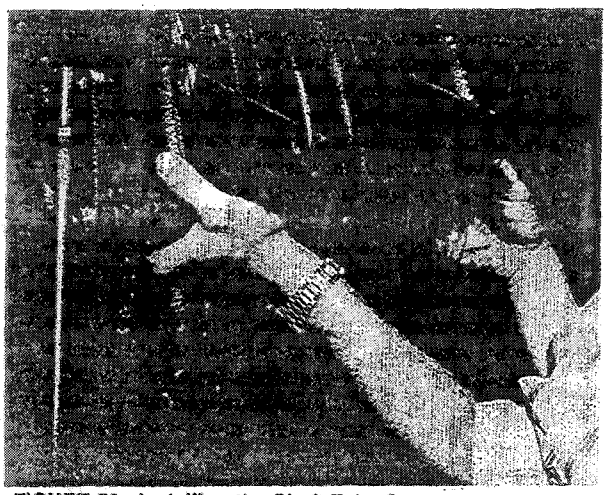

FIGURE 59 - Installing the Shaft Tube Support

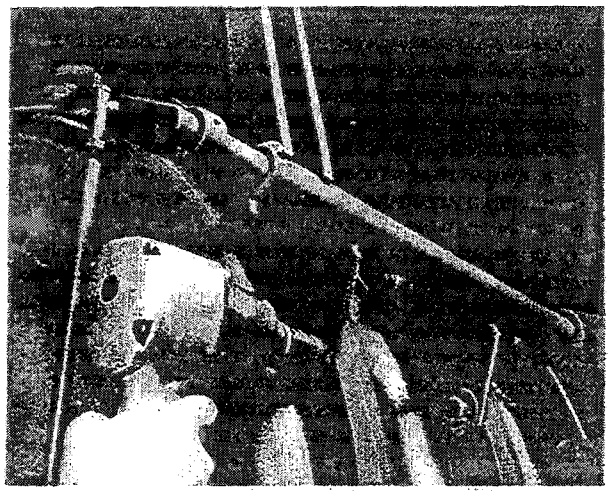

FIGURE 60 - Tightening the Shaft Tube Support Retaining Bolts

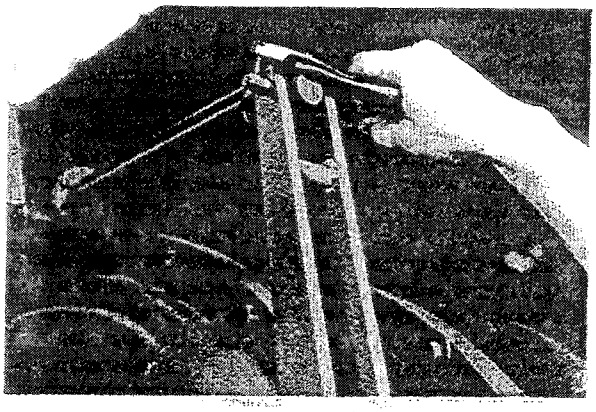

FIGURE 61 - Attaching Lever Assembly to Inlet Vane Actuator Motor

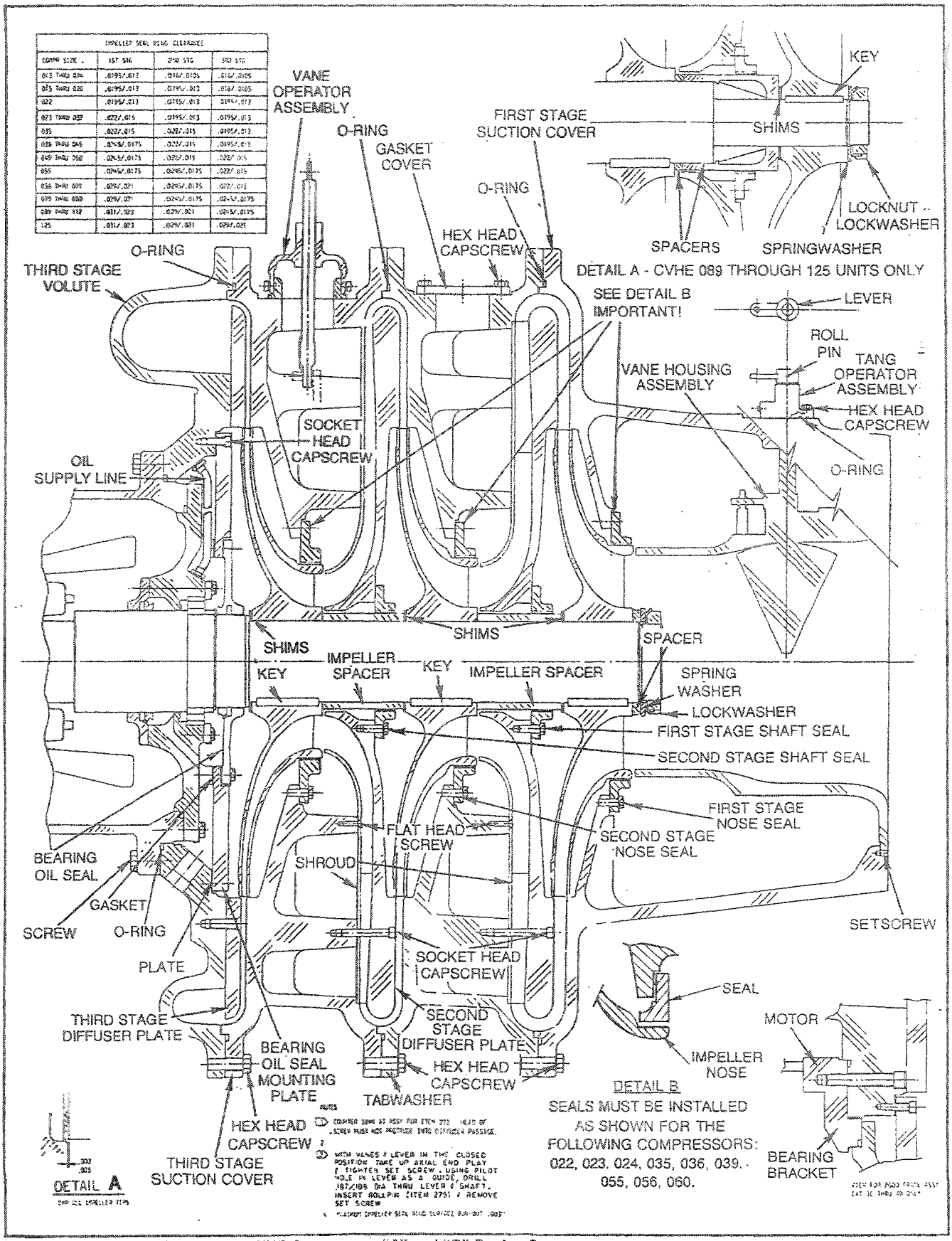

FIGURE 62 - Cutaway View, Model CVHE Compressor, "A" and "B" Design Sequence

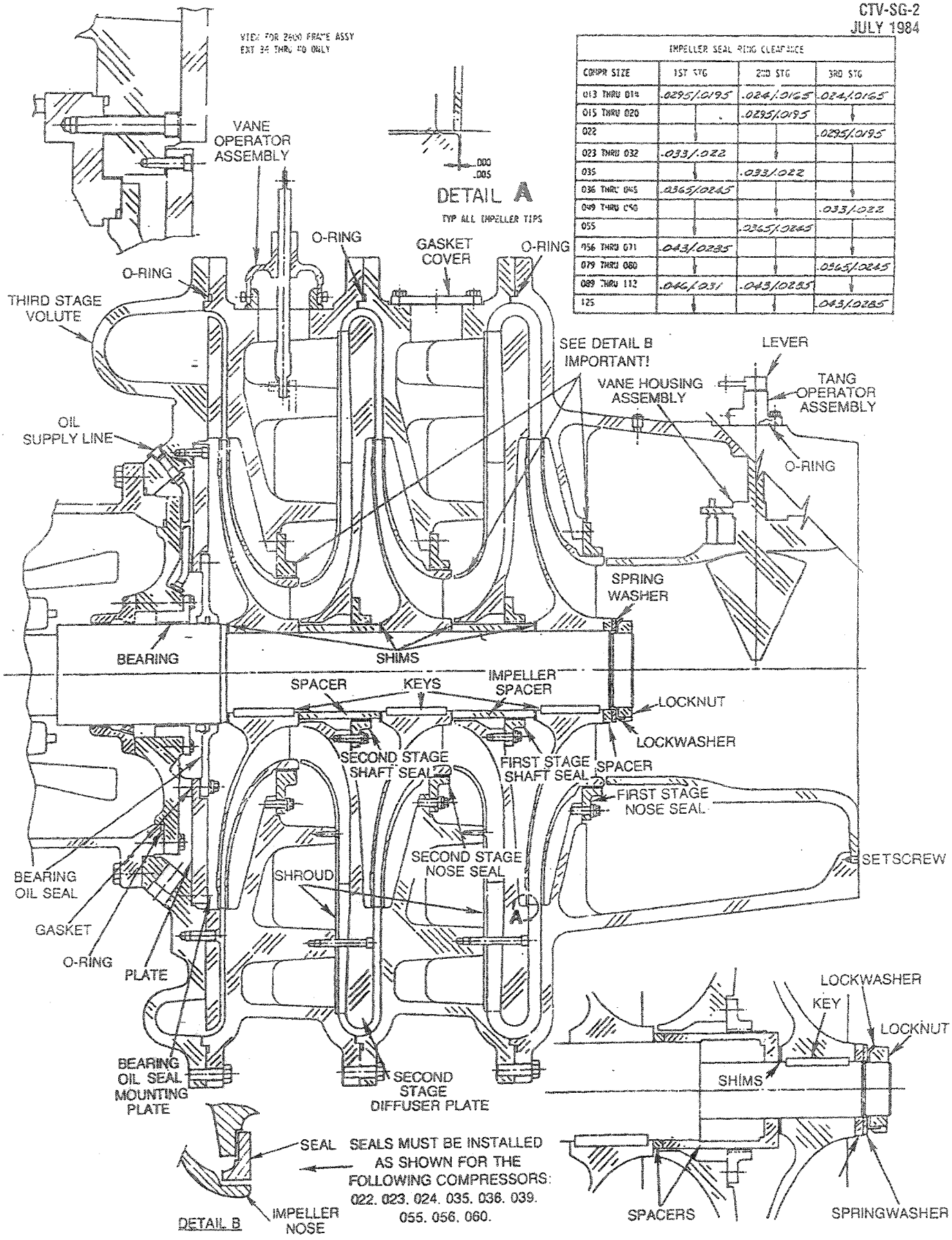

IMPELLER SEAL RING CLEARANCE			
COMPR SIZE	1ST STG	2ND STG	3RD STG
013 THRU 014	.0295/.0195	.024/.0165	.024/.0165
015 THRU 020	↓	.0295/.0195	↓
022	↓	↓	.0295/.0195
023 THRU 032	.033/.022	↓	↓
035	↓	.033/.022	↓
036 THRU 045	.0365/.0245	↓	↓
049 THRU 060	↓	↓	.033/.022
055	↓	.0365/.0245	↓
056 THRU 071	.043/.0285	↓	↓
079 THRU 080	↓	↓	.0365/.0245
089 THRU 112	.046/.031	.043/.0285	↓
125	↓	↓	.043/.0285

FIGURE 63 - Cutaway View, Model CVHE Compressor, "C" and "D" Design Sequence

FWB/LLW

Compressor Motor Removal and Replacement

SECTION 8.4

June 1986

This section describes the procedures required to remove and reinstall the compressor motors of Model CVHE CenTraVacs. The information presented here applies to all motors, regardless of compressor size.

WARNING: Before working on this equipment, always disconnect all electrical power. Failure to do so may result in serious injury or death due to electrical shock.

Motor Removal

1. Disassemble the compressor. (A compressor disassembly procedure is outlined in Section 8.2 of this service guide.)

2. **CVHEs w/Unit-Mounted Starters.** Remove the factory-mounted starter panel from the motor terminal casting. Label and remove all motor power leads and starter panel interconnecting wiring.

CVHEs w/Remote-Mounted Starters. Label and disconnect the motor power leads; then remove the conduit box.

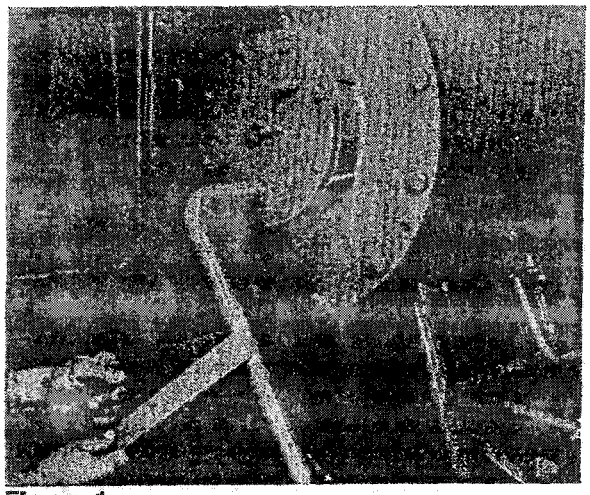

Figure 1
Removing Paint from the Oil Drain Line

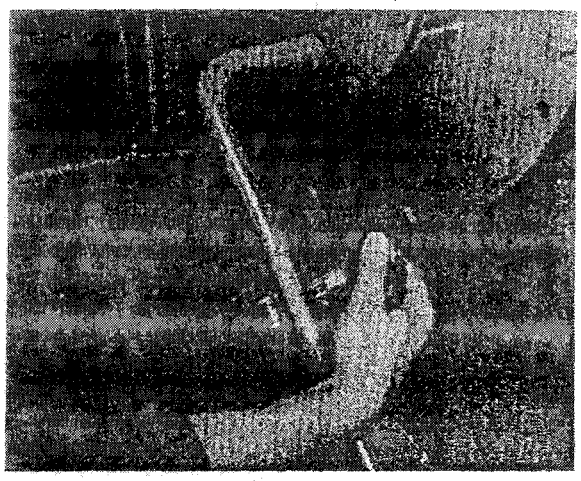

Figure 2
Cutting the Drain Line



Figure 3
Cutting an Oil Supply Line

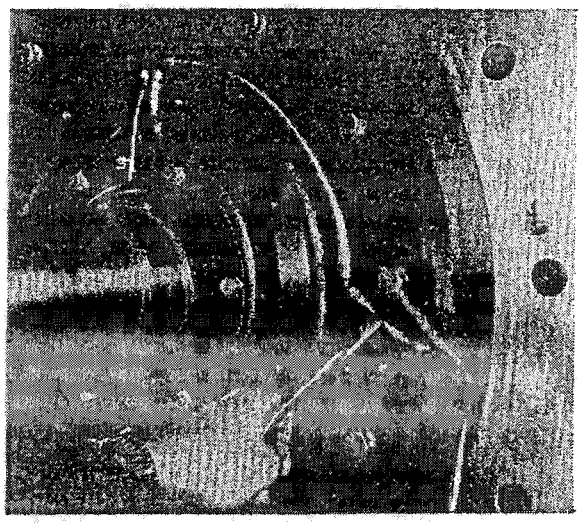

Figure 4
Unsweating the Internal Oil Supply Line

3. Label and remove the motor winding temperature sensor leads.

4. Disconnect and cap the oil return lines, as well as the oil supply line to the thrust bearing. Also, disconnect the internal oil supply line to the compressor shaft-end roller bearing; see Figures 1 through 4. Notice that the internal line can be disconnected by unsweating the coupling (Figure 4).

5. Disconnect the refrigerant supply and drain lines from the motor; to do this, simply unbolt the drain line flanges from the motor. See Figures 5, 6 and 7.

6. Attach lifting slings to the compressor motor as shown in Figure 8.

7. Remove the bolts that secure the motor to the back bracket; see Figure 7.

8. Loosen and remove 2 of the bolts that secure the motor to the third-stage volute casing. Insert a guide pin into each of these bolt holes.

9. Remove the remaining bolts, and carefully pull the motor straight out until the shaft clears the volute casing. See Figures 8 and 9.

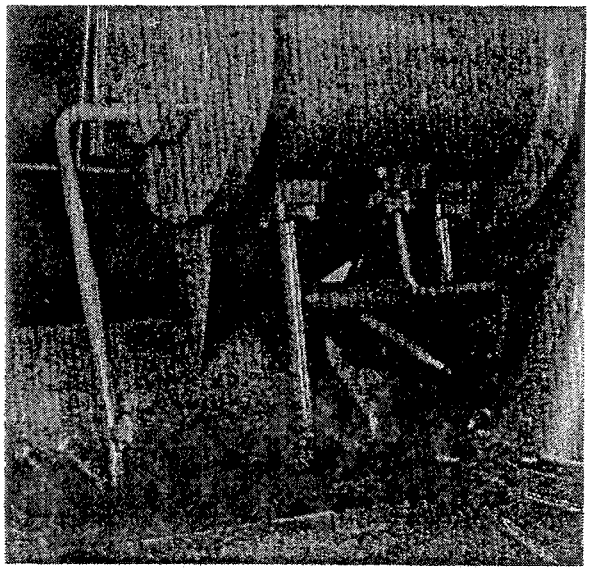

Figure 5
Motor Cooling Refrigerant Supply and Drain Lines

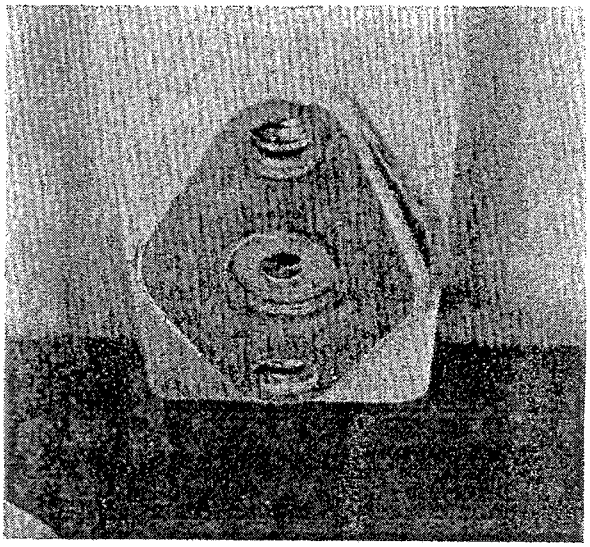

Figure 6
Refrigerant Supply Flange

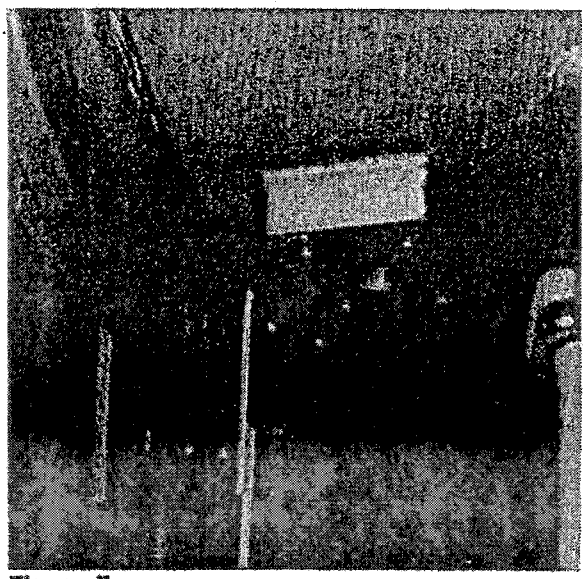

Figure 7
Refrigerant Drain Flange and Back Bracket

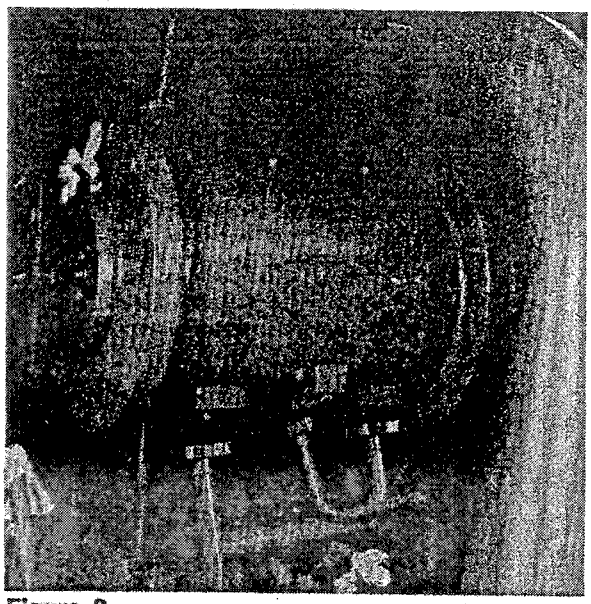

Figure 8
Lifting the Motor Clear of the Compressor

The Trane Company
La Crosse, Wisconsin 54601-7599
Printed in U.S.A.

©American Standard Inc. 1987

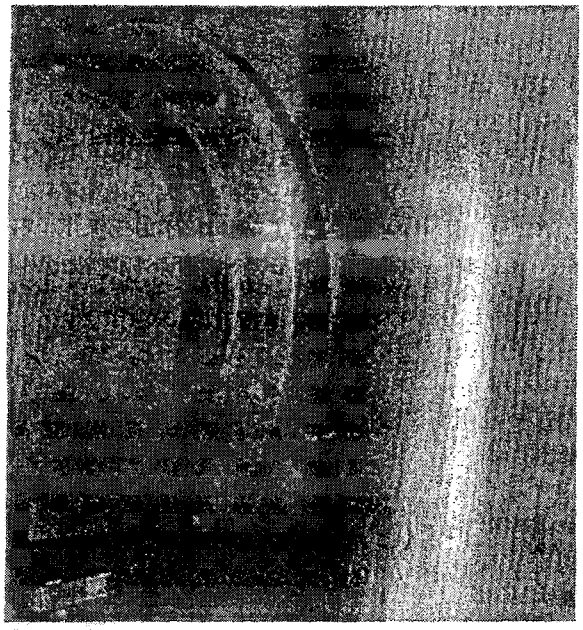

Figure 9
Removing the Motor

Be sure to adhere to the following guidelines whether the motor just removed will be reused, or if a replacement motor will be installed:

[ ] **Motor Storage.** Store the motor (original or replacement, as applicable) in a clean, dry location that is protected from dirt and extreme variations in temperature and humidity; the minimum temperature acceptable for motor storage is 40 F.

Special care must be taken to ensure that the storage temperature of the motor is always above the dew point of the surrounding air; this will protect the motor windings from the damaging effects of condensation.

The oil-lubricated roller bearings of new replacement motors are "run" tested at the factory with a rust-preventive oil that protects the bearing and bearing structure from corrosion; however, this bearing oil is drained before shipment. Therefore, to protect the bearings and bearing structures of a new or reused motor during storage, add 1 pint of rust-preventive oil (e.g., Texaco Preservative Oil No. 30, or equivalent) to each bearing—while rotating the shaft by hand—every 90 days.

Note: If the motor storage period will exceed 12 months, contact the factory for special instructions and additional storage precautions.

[ ] **Mechanical Inspection.** Visually inspect the motor exterior for rust. If external rust is present, remove the shaft-extension/bearing bracket and check the motor interior for rust. All rust—particularly that on the motor interior and shaft-extension/bearing bracket—must be removed before the motor is installed!

Also, rotate the motor shaft by hand to verify that it turns freely; at the same time, add oil to each bearing oil inlet.

Note: Since the bearings are designed for pressure lubrication, the oil pressure system must be connected to the motor—and the proper bearing pressure must be established—before the motor is started.

[ ] **Electrical Test.** Meg-test the motor winding insulation to ensure that the motor windings did not absorb moisture during storage or transit. Use a 500 VDC megohm insulation tester to check insulation resistance between the motor windings and the motor housing; make sure that these measurements are taken at—or corrected to—68 F. The insulation resistance measured should be above the minimum value shown on the curve in Figure 10.

Once the test is complete, discharge the motor windings by touching the motor terminal studs with a ground wire connected to the motor housing.

Note: If the insulation resistance reading obtained is less than the minimum value shown on the curve (Figure 10), the compressor motor must be dried out before it is installed on the unit.

[ ] **Drying Out Wet Motor Windings.** To dry out wet motor windings, apply a single-phase voltage of approximately 5% of the voltage value indicated on the motor nameplate. For 6-terminal, low-voltage motors, connect the motor as described on the nameplate for across-the-line starting; then apply single-phase voltage to Terminals T1 and T2. For 3-terminal, high-voltage motors, apply the single-phase voltage between Terminals T1 and T2.

It is impossible to predict the amount of time that will be required to dry out the motor windings since it varies with motor size and the amount of moisture that the windings have absorbed. As a guideline, continue the "drying out" process until the insulation resistance/ground readings become fairly constant. Remember that successive insulation readings must be made at the same temperature to assure an accurate interpretation of the windings' moisture content; readings taken at different temperatures will vary considerably.

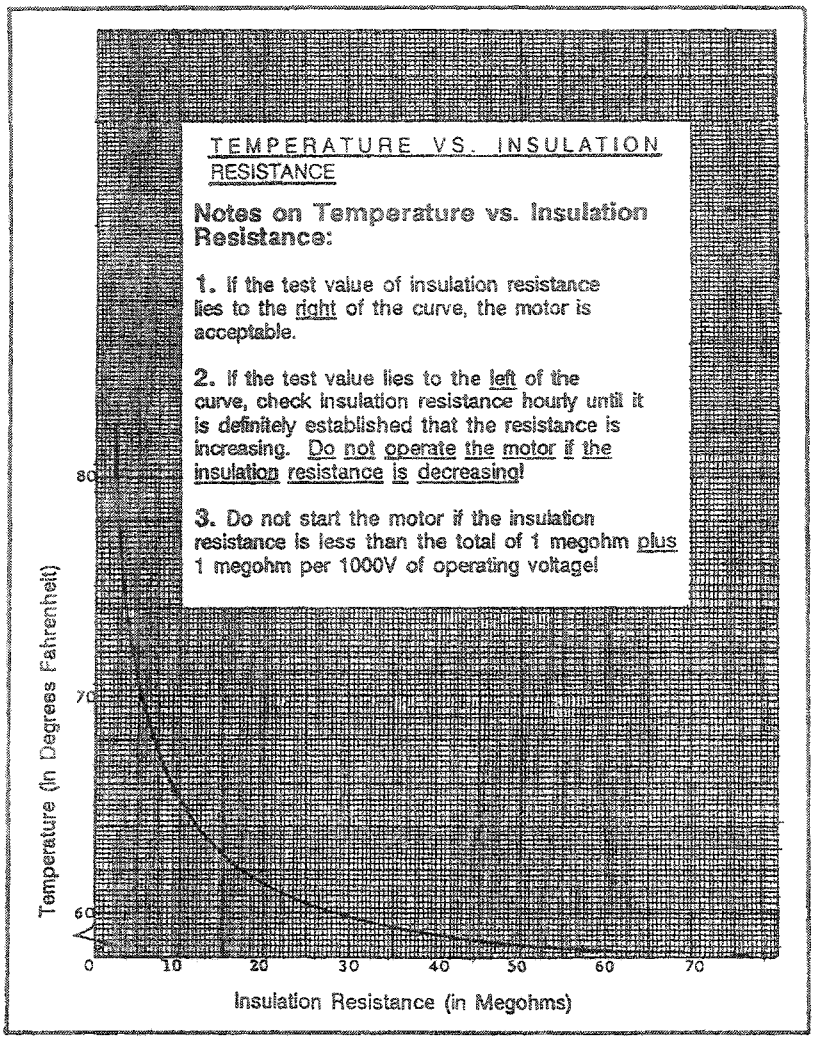

Figure 10
Temperature vs. Insulation Resistance

Caution: Do not "high potential" test! Repeated "high potential" tests drastically reduce motor life. (All motors are factory "high potential" tested at twice the rated voltage plus 1,000 volts, per NEMA MG1.

Caution: To avoid serious motor damage, never perform any of these operations while motor is under vacuum:
a. "high potential" test;
b. "megger" test (insulation resistance test);
c. dry windings by applying single-phase voltage to motor; or,
d. apply 3-phase line voltage to motor.

Motor Installation

1. Measure motor winding insulation resistance; follow the recommended procedure just described under "Electrical Test".

2. If you are replacing the old motor with a new one, remove all lubrication supply and drain line fittings from the old motor and install them on the new motor. Use Teflon tape on all threaded-connection fittings.

Note: When an "A" or "B"-design motor is replaced by one of "C" or later design, notice that the oil feed orifices change. The inboard bearing's oil feed orifice is built into the bearing on "C" and later design motors; discard the external orifice from the old motor. However, an external orifice is required for the outboard bearings of "C" and later design motors; see Table 2 to determine proper orifice size.

Before proceeding, review the bearing-related characteristics that distinguish CVHE motors of "A" or "B" design from those of "C" or later design:

a. CVHEs of "A" or "B" Design. Bearings are provided on both the inboard ("drive end") and outboard ("opposite drive-end") ends of the motor. A roller bearing supports the inboard end of the motor, while the outboard end of the motor is supported by a matched pair of tapered roller bearings that carry the thrust load. Bearing size varies with the frame size of the motor; Table 1 indicates the appropriate bearing and orifice sizes for each compressor motor size.

b. CVHEs of "C" and Subsequent Design. Again, bearings are provided on both the inboard and outboard ends of the motor. However, the inboard end of motors of "C" and later design is supported by a babbitted journal bearing, while a matched set of ball bearings carries the thrust load and supports the outboard end of the motor. Table 2 indicates the appropriate bearing and orifice sizes for each compressor motor frame size.

3. Install the motor on the third-stage volute by completing the disassembly instructions in reverse order.

Note: Connect only the bearing oil supply lines at this time.

4. Measure the oil flow rate through the motor bearings; to do this:

a. Remove the old oil from the sump; then recharge the sump with the proper amount of new oil (i.e., not mixed with refrigerant).

b. Energize the oil sump heater to raise the oil temperature to 140 F.

c. Once the oil is properly heated, energize the oil pump; use the oil pump switch on the unit control panel.

Note: An oil pump switch was not provided on some early versions of the unit control panel. In these instances, it is necessary to install a jumper wire to energize the oil pump. Be sure to remove this jumper wire as soon as you've determined the oil flow rate!

d. Set the oil pressure regulating valve to maintain a constant net oil pressure of 18 to 20 psid.

e. Monitor the quantity of oil leaving the motor bearings. Use Table 1 or 2, as appropriate, to determine the correct oil flow rate while the motor is running.

Note: Oil pressure may change when the motor is started; readjust as required.

5. After verifying that the oil flow rates through the motor bearings are acceptable, reconnect the oil drain lines; use slip couplings and silver solder to rejoin the lines.

Note: Be sure to purge both the oil and refrigerant lines with dry nitrogen while applying the silver solder.

6. Reconnect the motor cooling refrigerant supply and drain lines at the motor.

7. Reassemble the compressor; follow the instructions provided in Section 8.3 of this service guide.

8. Reconnect the temperature sensor leads of the motor winding thermostat.

9. Reconnect the motor power supply when ready, and restart the chiller; follow the start-up instructions provided in Section 4.0 or 4.1, as appropriate.

Table 1
Bearing Orifice Requirements for CVHE Compressor Motors of "A" or "B" Design

Compressor Motor Frame Size	Compressor Motor Bearing Characteristics				
	Type	Location	Correct Oil Flow Rate (See Note)	Approx. Inside Diam	Orifice Size (ID Stamp)
360, 400, 1500 and 1700	Inboard Bearing (Roller Bearing)	"Drive" End of Motor	0.9 gpm ± 15%	5"	0.067" ("01")
	Outboard Bearing (Matched Pair of Tapered Roller Bearings)	"Opposite Drive-End" of Motor	0.5 gpm ± 15%	2"	0.0935" ("03")
440, All 1800 & Larger, and Some 1700	Inboard Bearing (Roller Bearing)	"Drive" End of Motor	1.2 gpm ± 15%	6"	0.082" ("02")
	Outboard Bearing (Matched Pair of Tapered Roller Bearings)	"Opposite Drive-End" of Motor	0.8 gpm ± 15%	3"	0.116" ("04")

Note: Flow rates shown are while the motor is running.

Table 2.
Bearing Orifice Requirements for CVHE Compressor Motors of "C" and Subsequent Design

Compressor Motor Frame Size	Compressor Motor Bearing Characteristics				
	Type	Location	Correct Oil Flow Rate (See Note 1)	Approx. Inside Diam.	Orifice Size (ID Stamp)
360, 400, 1500 and 1700	Inboard Bearing (Babbitted Journal Bearing)	"Drive" End of Motor	1.27 gpm ± 15%	5-1/2"	See Note 2
	Outboard Bearing (Matched Set of Ball Bearings)	"Opposite Drive-End" of Motor	0.5 gpm ± 15%	2"	0.067" ("01")
440, All 1900 & Larger, and Some 1700	Inboard Bearing (Babbitted Journal Bearing)	"Drive" End of Motor	1.70 gpm ± 15%	6-1/2"	See Note 2
	Outboard Bearing (Matched Set of Ball Bearings)	"Opposite Drive-End" of Motor	0.8 gpm ± 15%	3-1/2"	0.082" ("02")

Notes:
1. Flow rates shown are while the motor is running.
2. When replacing an "A"- or "B"-design compressor motor with one of "C" or later design, discard the external inboard bearing orifice from the old motor.

PRINTED BY PRODUCTION SERVICES — LA CROSSE

BB/LW

COMPRESSOR MOTOR DISASSEMBLY AND REASSEMBLY A AND B DESIGN SEQUENCE

LITERATURE FILE NO. CTV-SG-2

SECTION 8.5

JULY 1984

This section describes the disassembly and reassembly of the model CVHE CenTraVac compressor motor design sequence A and B. Before the complete motor is disassembled it is necessary to disassemble the compressor. Refer to Section 8.2.

NOTE: Figures 91 and 92, found on pages 25 and 26, are cutaway and exploded views of the motor. Refer to these during disassembly and reassembly of the motor.

NOTE: The following instructions identify motor orientation for the procedures. DRIVE END refers to the shaft extension end or compressor end of the motor. OPPOSITE DRIVE refers to the electrical terminal end of the motor. The compressor drive end of the motor must be disassembled first if the entire motor is to be disassembled. The thrust bearing assembly can be replaced from the opposite drive end of the motor without affecting the compressor.

NOTE: The motor bearings and rotor can be changed without removing the entire motor. The following section describes motor disassembly with the motor mounted on the chiller.

WARNING: Before working on this or any electrical equipment, always disconnect all electrical power. Failure to do so may result in serious personal injury or death caused by electric shock or becoming entangled in rotating equipment.

DISASSEMBLY

1. Disconnect the drive end motor bearing supply line. Unsweat the ¼-inch line near the volute casting as shown in Figure 1.
2. Using large snap ring pliers, remove the bearing snap ring shown in Figure 2.
3. Remove all bolts securing the inner seal and back bearing race retaining ring. See Figures 3 and 4. Remove the retaining ring by carefully sliding it off the shaft.
4. Remove the drive end motor bearing bracket. The entire drive end bearing will also be removed. The procedure is as follows (Refer to Figure 5):
   a. Remove two bolts 180 degrees apart on the horizontal centerline and then insert two guide rods approximately 12 inches long.
   b. Remove the remaining bearing bracket bolts.
   c. Insert four 6 inch bolts into the jack-out bolt holes in the bearing bracket.
   d. Tighten the bolts evenly to push the bearing bracket squarely away from the motor until the bearing and spacer are past the pressed-on area of the shaft. See Figure 6. The bearing bracket can rest on the guide rods. Remove the bearing and spacer assembly. Refer to Figure 7.

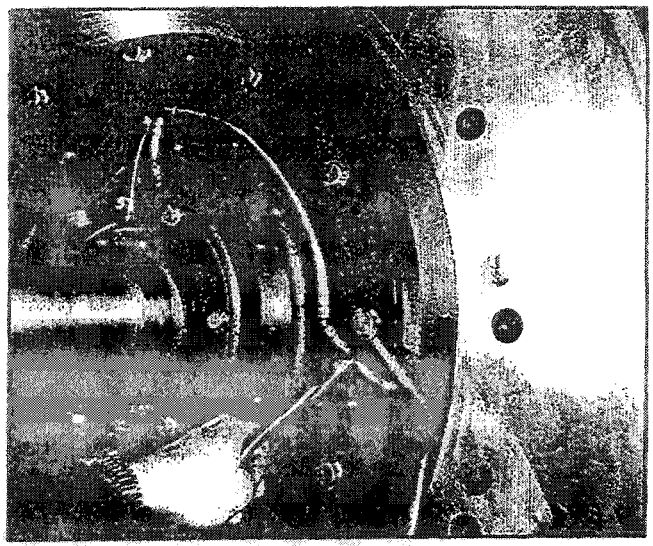

FIGURE 1 — Unsweating the Internal Oil Supply Line

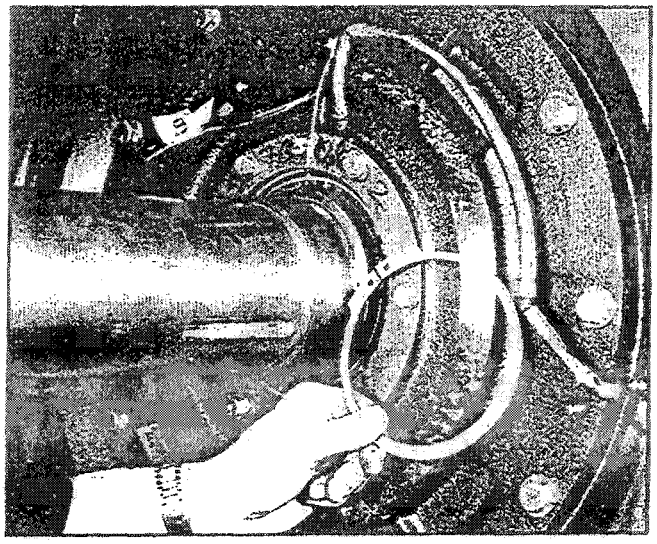

FIGURE 2 — Snap Ring

© THE TRANE COMPANY 1984
COMMERCIAL SYSTEMS GROUP
LA CROSSE, WISCONSIN 54601-7599
PRINTED IN U.S.A.

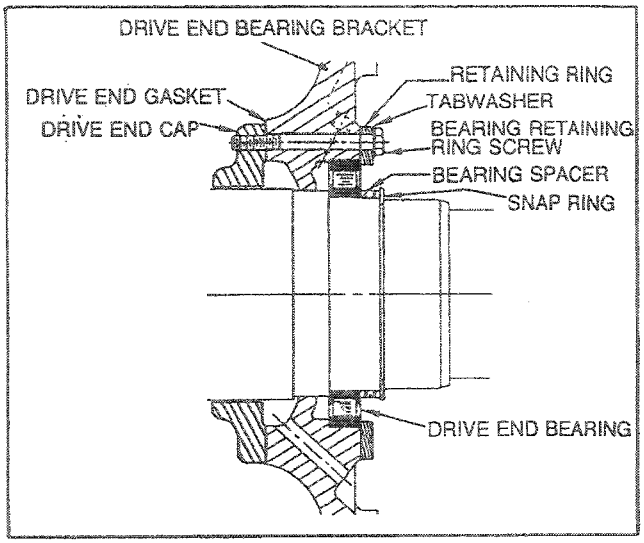

FIGURE 3 — Drive End Bearing Assembly

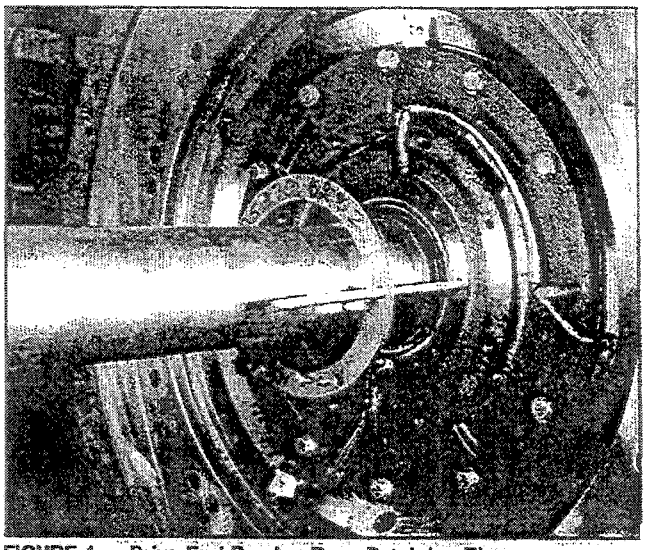

FIGURE 4 — Drive End Bearing Race Retaining Ring

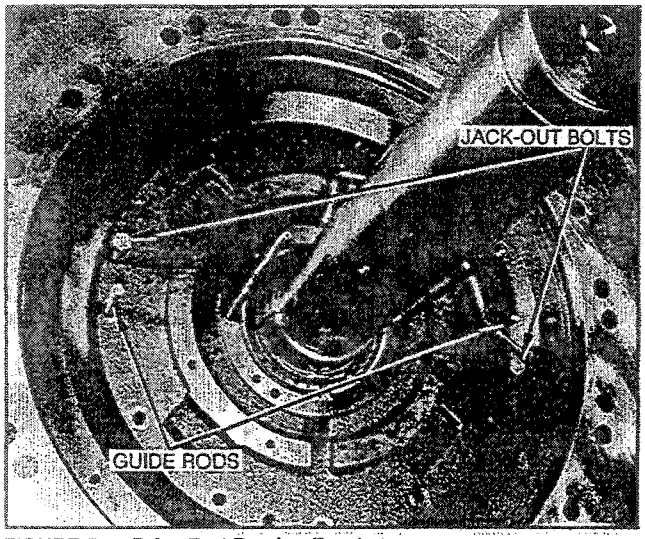

FIGURE 5 — Drive End Bearing Bracket

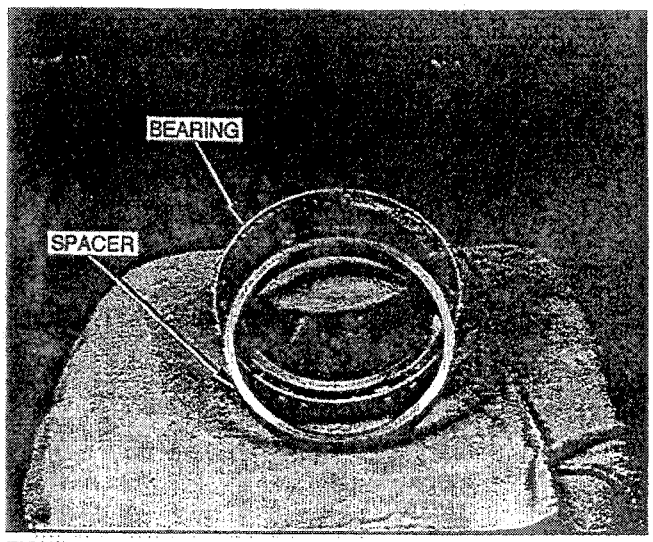

FIGURE 6 — Drive End Bearing and Spacer

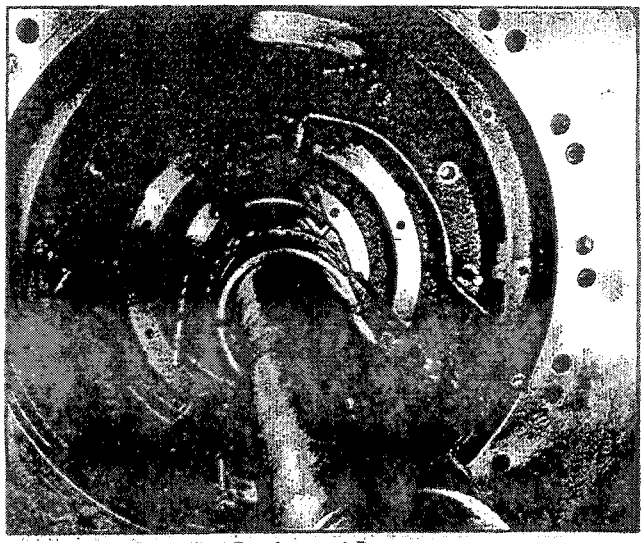

FIGURE 7 — Drive End Bearing and Spacer

e. Attach an overhead lifting rig to the bearing bracket. Attach with a clevis pin to the bracket and remove slowly from the shaft. Remove the O-ring and bearing cap. The rotor will rest on the stator. Figure 8 illustrates the bracket and bearing cap with gasket.

f. Protect the rotor shaft to prevent damage while the bearing bracket is removed.

g. Remove the outer bearing race by carefully prying it from the bearing bracket. This is not a pressed fit, however, care must be taken so as not to damage the race. Replace the bearing if the race is damaged. Figures 9 and 10 illustrate the bearing parts.

h. Remove the inner bearing cap and gasket from the shaft.

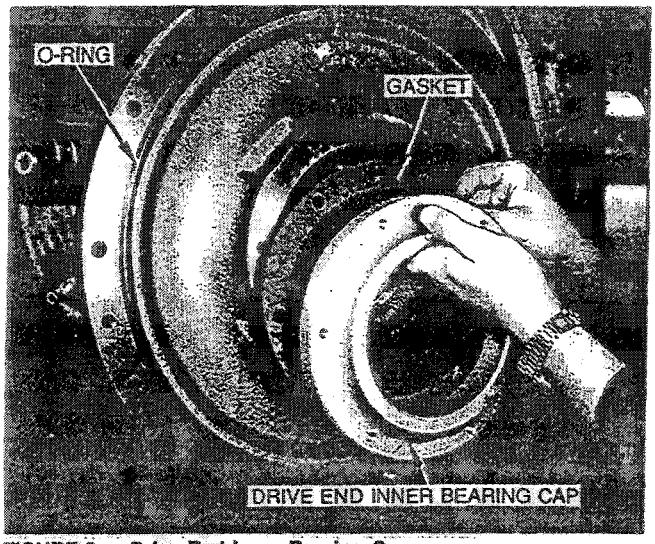

FIGURE 8 — Drive End Inner Bearing Cap

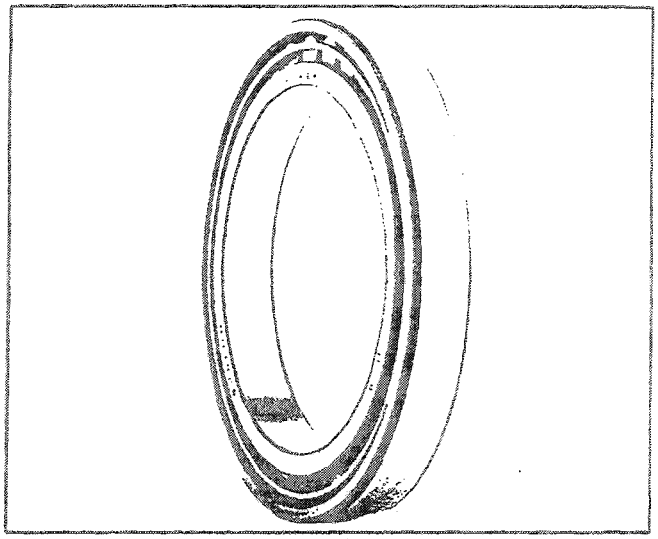
FIGURE 9 — Assembled Drive End Bearing

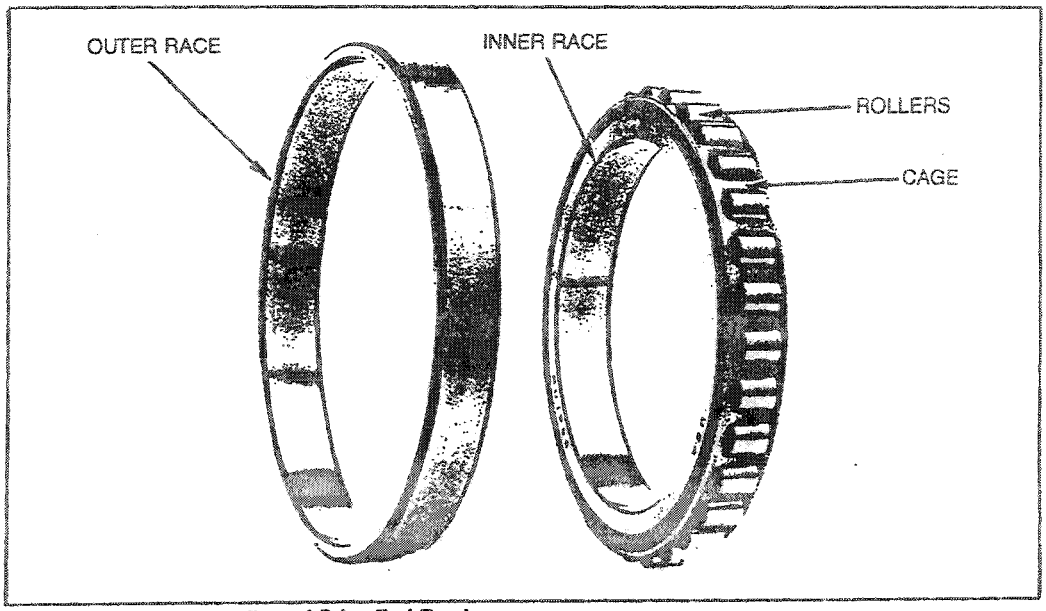

FIGURE 10 — Exploded View of Drive End Bearing

5. Using a tubing cutter, cut the oil supply and drain lines on the opposite drive end of the motor. Before cutting the lines, sand all paint from the area where the cut is to be made. This will allow brazing the lines together during reassembly. Be sure to sand the paint off before making the cut to prevent the entry of dust into the oil lines. Cover the open pipe ends to prevent the entry of dirt, debris and moisture. Refer to Figure 11.
6. Remove the bearing cover with the sight glass. See Figure 12.
7. Release the bearing cap by removing the outer diameter bolts. See Figure 13.
8. Remove the bearing race retaining ring bolts (inner diameter) and remove the retaining ring. Refer to Figure 14.
9. Remove the opposite drive end bearing bracket. Refer to Figures 15, 16, 17 and the following procedure:
   a. Before the opposite drive end bearing bracket retaining bolts are loosened and the bracket removed, its position must be precisely located so that when the motor is reassembled the bearing bracket is returned to its original position. This is accomplished by drilling two ¼-inch holes in the circumference of the bracket and motor flanges. This allows the installation of ¼-inch roll pins during reassembly which precisely locates the bearing bracket in its original position. Drill the ¼-inch holes in the circumference of the flange bolts as shown in Figure 15. The holes are drilled in the seven o'clock and one o'clock positions. Do not drill any holes in the motor terminal box area. Drill the holes all the way through the bracket and motor flanges. When the roll pin holes have been drilled, proceed with Step b.
   b. Remove two bolts, 180 degrees apart on the horizontal centerline and insert two guide rods approximately 6 inches long.
   c. Remove the remaining bearing bracket bolts.

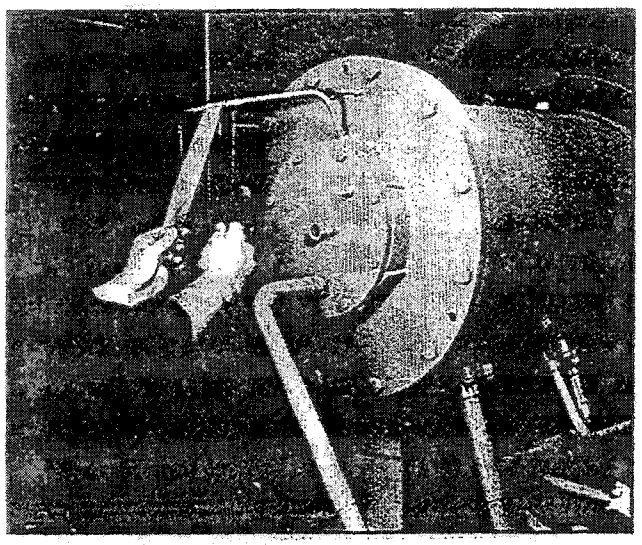

FIGURE 11 — Removing Paint from Oil Supply Line at Opposite Drive End Bearing

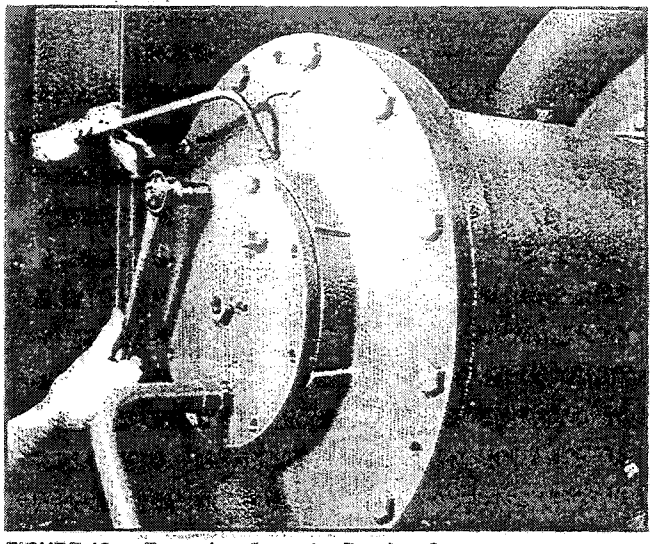

FIGURE 12 — Removing Opposite Bearing Cover

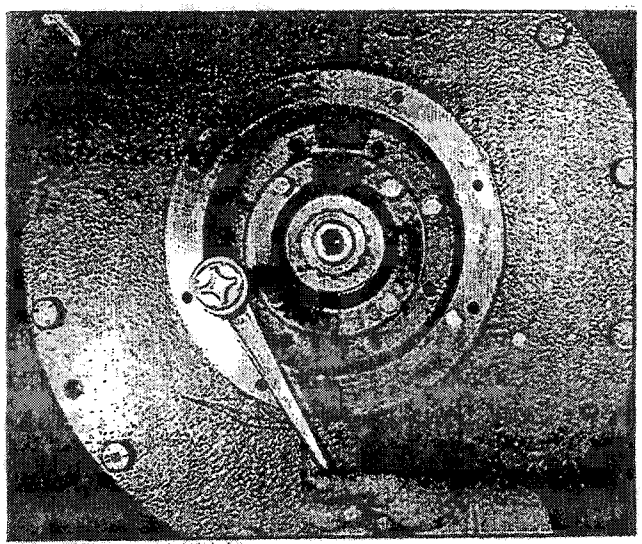

FIGURE 13 — Removing Inside Bearing Cap

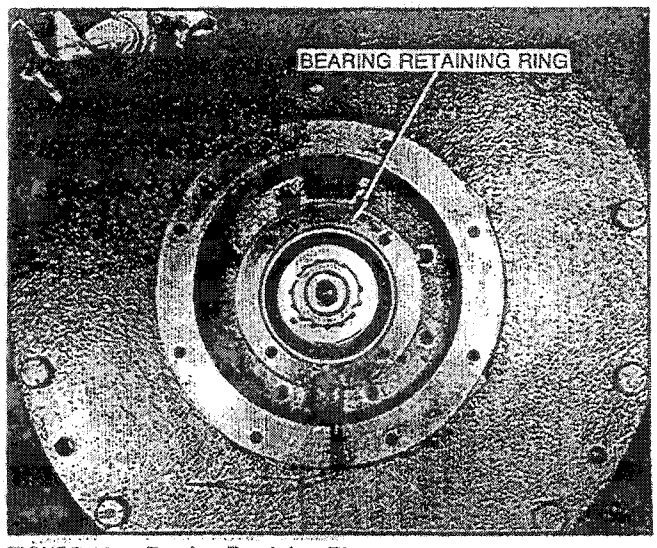

FIGURE 14 — Bearing Retaining Ring

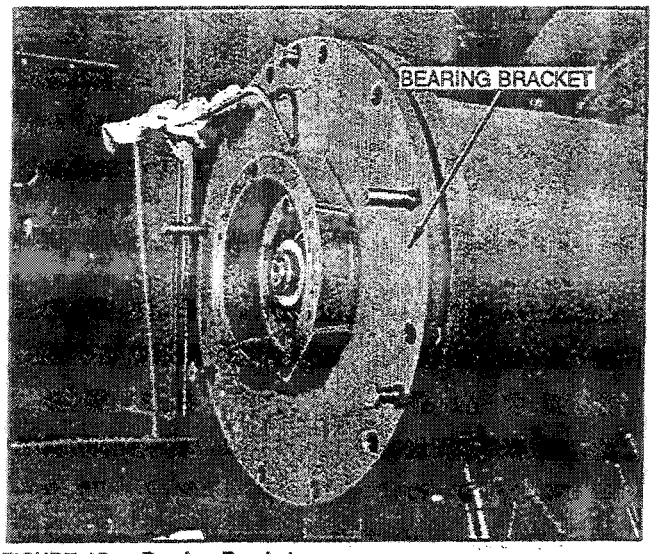

FIGURE 15 — Bearing Bracket

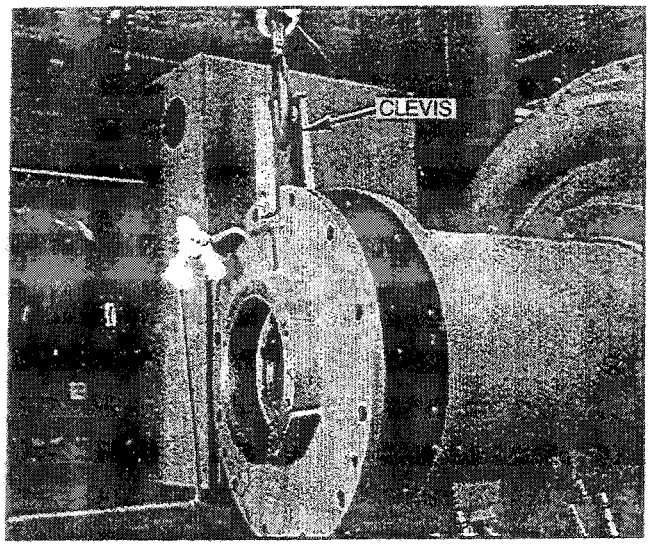

FIGURE 16 — Bearing Bracket Removal

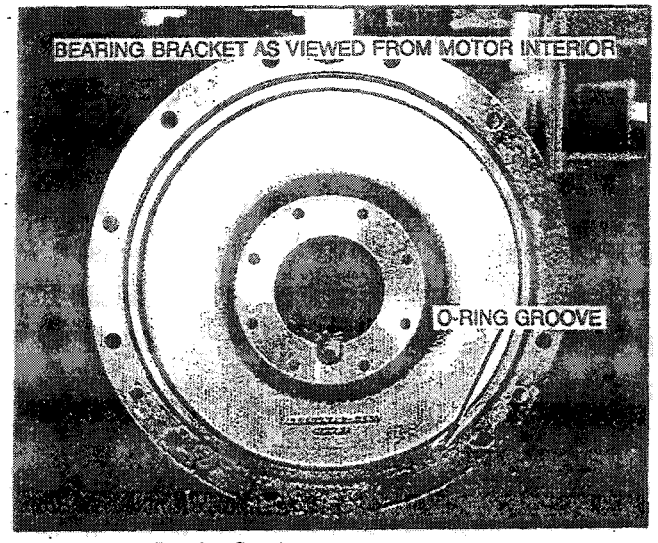

FIGURE 17 — Bearing Bracket

d. Insert three bolts in the jack-out holes to pull the bearing bracket evenly away from the motor.

e. Move the bracket out far enough so that a clevis can be attached. Support and remove the bracket from the motor.

10. Remove the thrust bearing shaft locknut. See Figures 18 and 19. Bend the lockwasher tab back, then loosen the locknut with a spanner and unscrew from the shaft. The threads are right-hand.

11. Remove the spacer — this is not a keyed or press fit. See Figure 18, page 8.5-6.

12. Remove the front end thrust bearing using a puller. The following combination of tools may be used for pulling the thrust bearing:
Owatonna Tool Company, Inc.
Model PP30 manual bearing pull (PPH30 Hydraulic)
Model AP13 jaws
Model KSP150 shaft protector adaptor

Attach the puller with bevelled edge of the jaws against the backside of the inner thrust bearing cone. See Figures 20, 21 and 22.

CAUTION: (1) Do not put the straight side of the puller jaws against the bearing – this will score the motor shaft. (2) Do not attempt to pull the thrust bearing assembly from the shaft by pulling on the rollers, roller cage assembly, or the tapered cup. This will result in bearing or shaft damage. (3) Examine the puller carefully during removal to insure that the puller is lined up squarely with the motor shaft. Failure to do so may result in injury to personnel and damage to the puller, bearing or shaft. (4) Always use shaft protector insert on the end of the puller as a bearing surface to avoid damage to the motor shaft. (5) Never attempt to heat the bearings while installed on the motor shaft as an aid to removal. Machine damage may result.

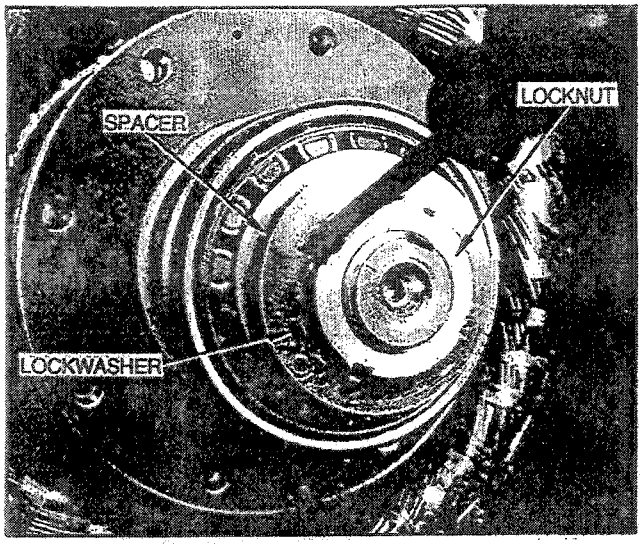

FIGURE 18 — Thrust Bearing Locknut

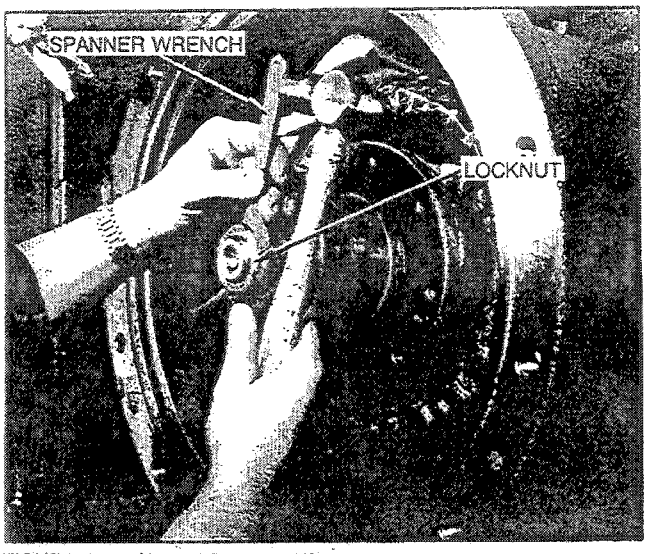

FIGURE 19 — Use of Spanner Wrench

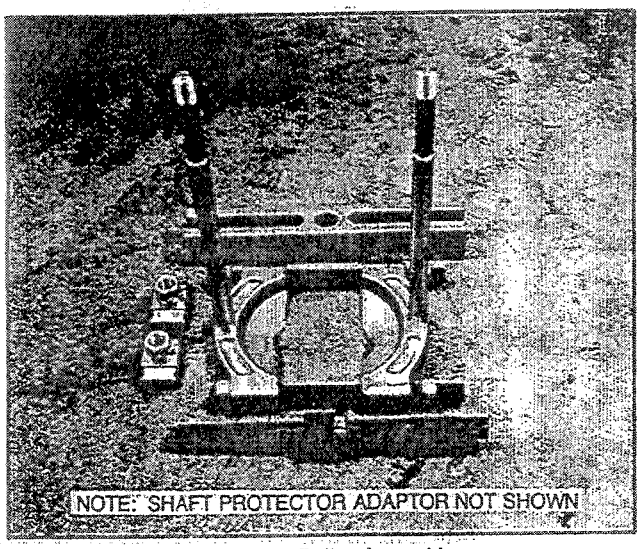

FIGURE 20 — Manual Bearing Puller Assembly

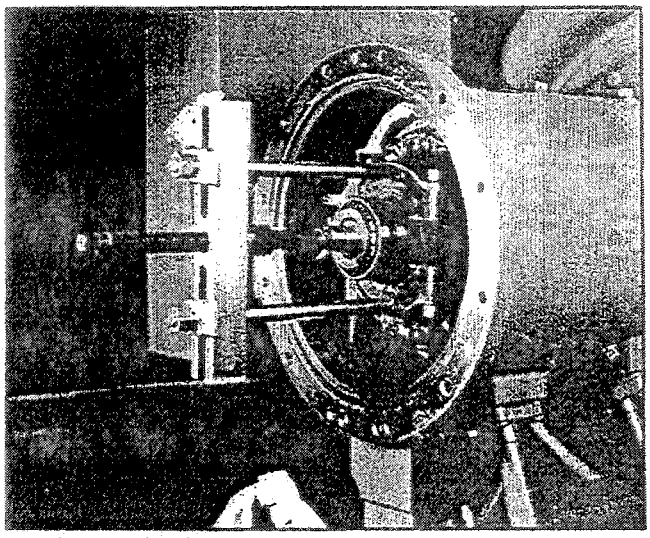
FIGURE 21 — Puller Assembly in Place

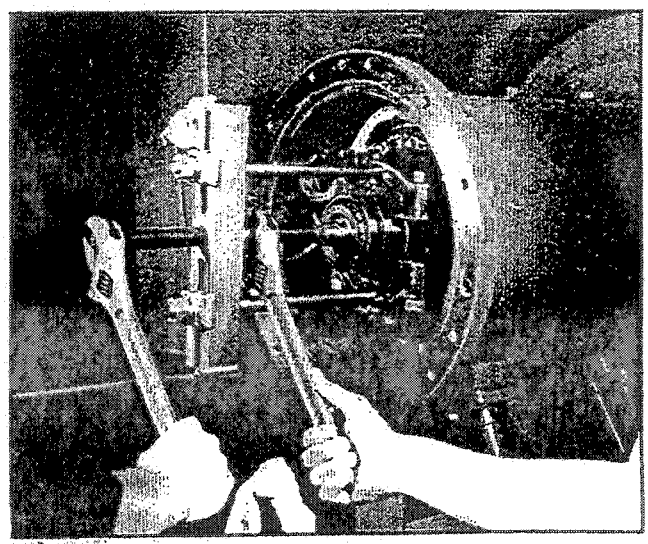
FIGURE 22 — Pulling Bearing Assembly

13. Insure that the puller assembly is lined up squarely on the motor shaft while removing the bearings. This should be checked several times. Cover the puller shaft with rags to prevent bearing damage when the bearing cones pull free of the motor shaft. Continue pulling the bearing off the shaft until the outer bearing assembly is free. The bearing will "pop" off the shaft. Place the bearing and roller assembly on the protected portion of the puller shaft. See Figure 23. Continue pulling the inner bearing and roller assembly off the shaft. It will also "pop" off the shaft when free. Remove the puller from the shaft.

CAUTION: WHEN THE INNER BEARING AND ROLLER ASSEMBLY PULL FREE FROM THE SHAFT, THE PULLER WILL FALL. HAVE PERSONNEL READY TO SUPPORT THE PULLER AND BEARINGS TO AVOID DAMAGE TO THE SHAFT AND BEARINGS.

14. Remove the inner bearing cap and gasket from the motor shaft. Notice the position of the oil drain hole at the bottom of the bearing cap. See Figures 24 and 25.

15. Use the following procedure and Figure 26 to remove the rotor assembly.

    a. Protect the rotor shaft while removing the assembly. Cover the shaft with brass pipe or other suitable material to prevent damage during removal.

    b. Place a sling around the pipe as near to the rotor as possible. See Figure 26.

    c. Raise the chain hoist to support the full weight of the rotor and withdraw the rotor from the stator. Withdraw the rotor from the drive end of the motor.

CAUTION: USE EXTREME CARE WHEN REMOVING THE ROTOR TO NOT STRIKE OR DAMAGE THE MOTOR WINDINGS IN ANY WAY.

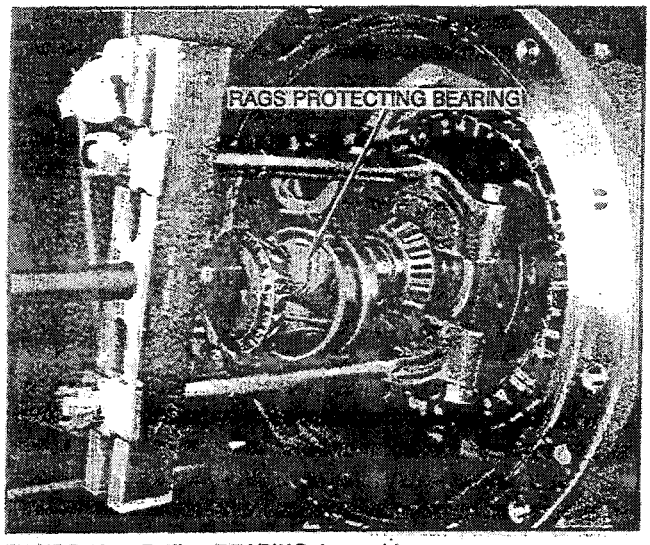

FIGURE 23 — Pulling BEARING Assembly

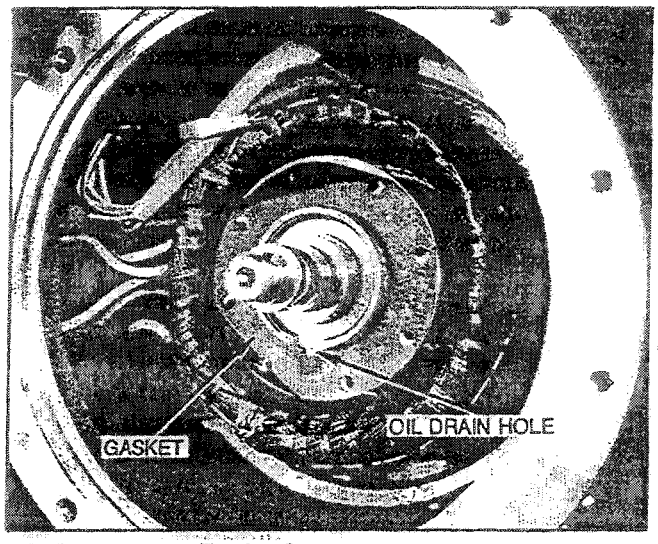

FIGURE 24 — Inner Bearing Cap

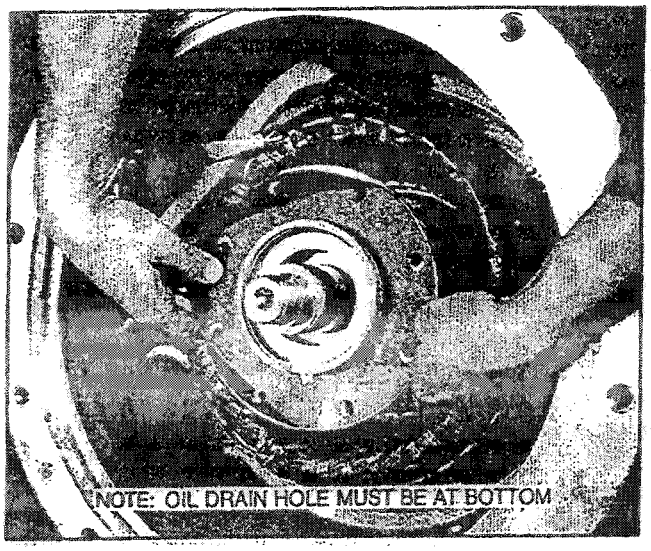

FIGURE 25 — Removing Bearing Cap

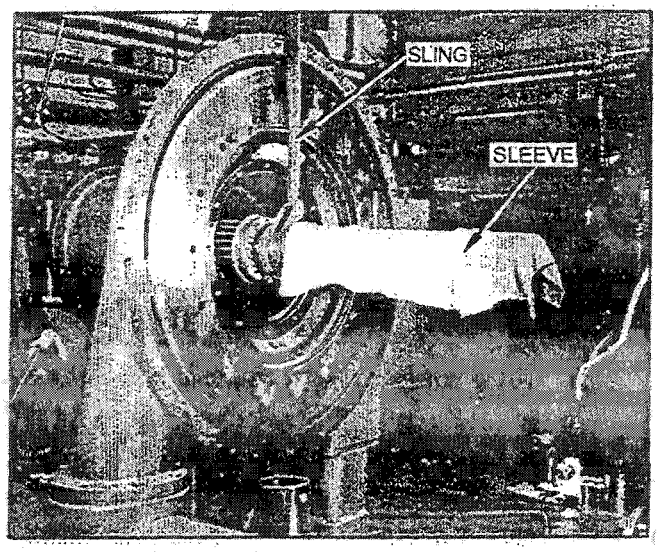

FIGURE 26 — Removing Rotor

MAIN TERMINAL BOARD DISASSEMBLY

This portion describes the disassembly of the main terminal board. Refer to Figure 27 which is a cutaway view of the terminal board when disassembling.

1. Disconnect all electrical power to the unit before proceeding. Verify that there is no power applied by checking with a voltmeter.

   WARNING: BEFORE WORKING ON THIS OR ANY ELECTRICAL EQUIPMENT, ALWAYS DISCONNECT ALL ELECTRICAL POWER. FAILURE TO DO SO MAY RESULT IN SERIOUS PERSONAL INJURY OR DEATH FROM ELECTRIC SHOCK.

2. Remove all refrigerant from the chiller and then evacuate the chiller to 5mm Hg. Then, pressurize the chiller to 0 psig using dry nitrogen.

   WARNING: USE ONLY DRY NITROGEN TO PRESSURIZE THE CHILLER. THE USE OF OXYGEN OR ACETYLENE MAY CAUSE A VIOLENT EXPLOSION RESULTING IN SERIOUS PERSONAL INJURY OR DEATH.

   NOTE: If the chiller is equipped with a factory mounted starter, remove the starter. This must be accomplished before work may proceed.

3. Disconnect the power leads at the motor terminals.

   NOTE: It is necessary to completely remove the conduit box or the factory mounted starter, depending upon the chiller. Also, mark the motor power leads to insure that the motor is wired properly upon reassembly.

4. Loosen and remove all hex head brass jam nuts and spring washers from the terminals. See Figures 28, 29 and 30.

5. Loosen the terminals from the terminal board either by hand or by using a wood mallet to tap the terminals and break the O-ring seal. See Figure 31.

6. Loosen and remove all terminal board bolts. Refer to Figure 32.

7. Remove the terminal board and gasket by slipping it over the studs.

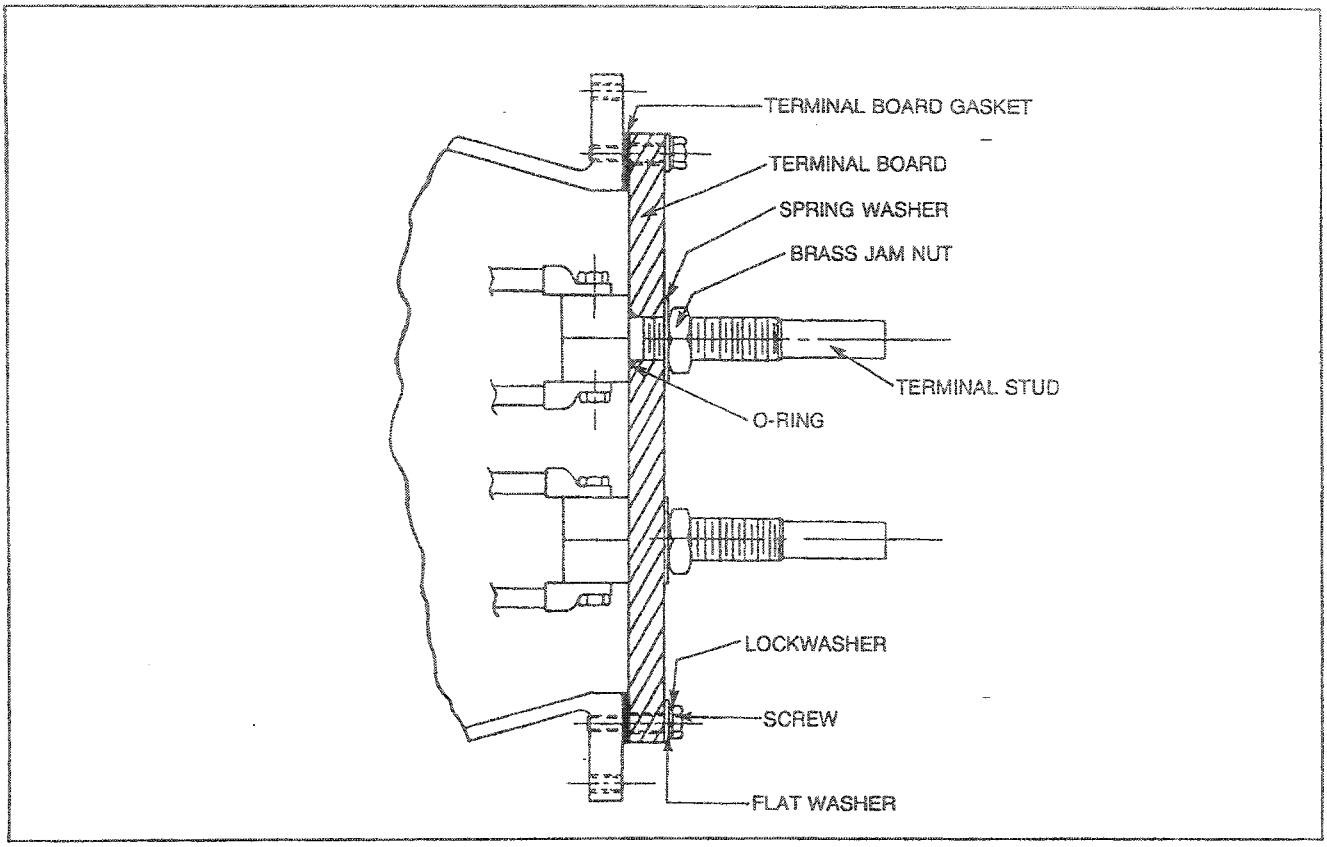

FIGURE 27 — Main Terminal Board Assembly

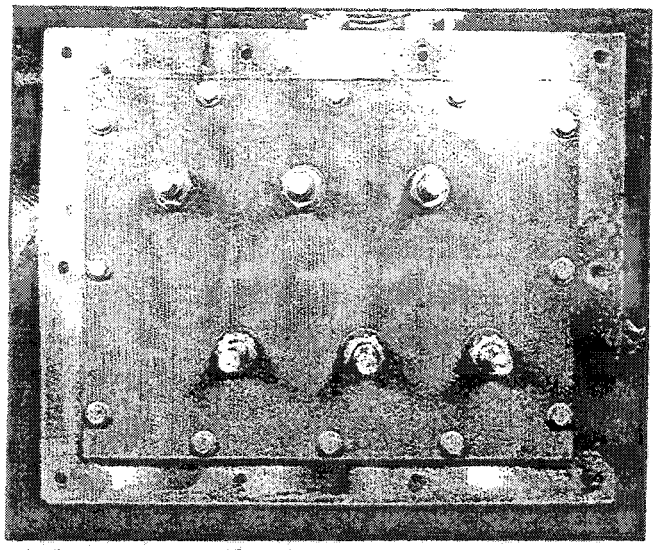

FIGURE 28 — Terminal Board

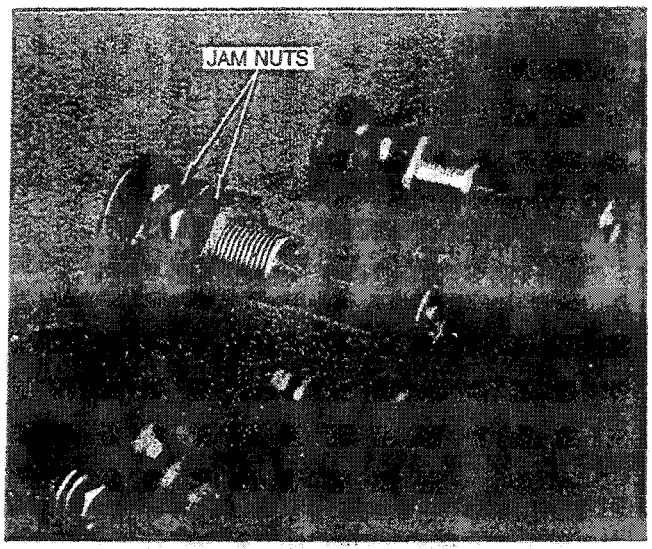

FIGURE 29 — Terminal Stud

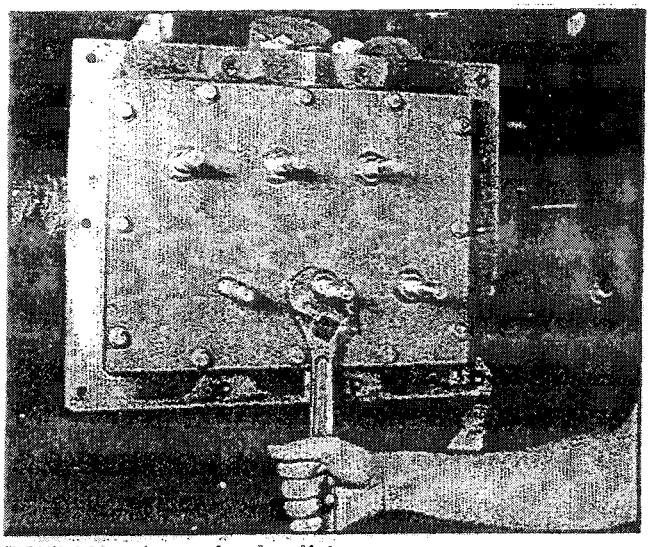

FIGURE 30 — Loosening Jam Nuts

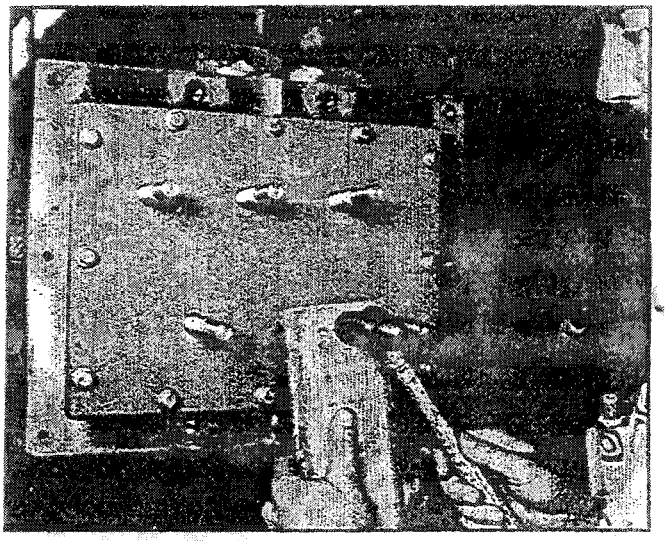

FIGURE 31 — Pushing Studs Through Terminal Board



FIGURE 32 — Removing Terminal Board Retaining Bolts

Terminal Stud Removal

With the entire terminal board removed from the chiller, loosen and remove the brass bolts securing the motor leads to the terminal. See Figures 33 and 34.

NOTE: Although all terminals and motor leads are marked, it is recommended that they be marked again.

R.T.D. (Resistive Temperature Detector) Terminal Board Disassembly

1. Remove the screws securing the conduit box cover. See Figure 35.
2. Disconnect the RTD leads from the stab-on connector.
3. Remove the screws securing the conduit box and remove box. See Figure 36.
4. Remove the four screws securing the temperature detector terminal block. Refer to Figures 37 and 38.
5. Disconnect the motor RTD leads by removing the stab-on connections and remove th terminal O-ring. See Figure 39.

NOTE: Motor-side RTD leads are marked to coincide with the embossed numbers on the terminal. Number 4 terminal is common.

NOTE: The stator assembly of the compressor cannot be removed and no attempt should be made to do so. The stator is welded in place, making field removal inadvisable.

RTD Terminal Board Reassembly

1. Feed the motor RTD lead wires through the hole in the motor barrel.
2. Slip the motor temperature detector terminal board O-rings over the RTD lead wires.
3. Attach the RTD leads to the temperature detector terminals by pressing the stab-on connectors on wires leads on to the terminals. See Figure 39.

   NOTE: All RTD lead wires are marked to coincide with embossed numbers on terminal. Number 4 is common.
4. Place O-ring in groove on temperature detector terminal board. See Figure 39. Coat the O-ring with Loctite 515 "Gasket Eliminator."
5. Secure the motor temperature detector board to the motor barrel with screws and lockwashers. See Figure 37.
6. Install the conduit box with screws and lockwashers. See Figure 36.
7. Reconnect the external RTD leads and conduit.
8. Install the conduit box cover.

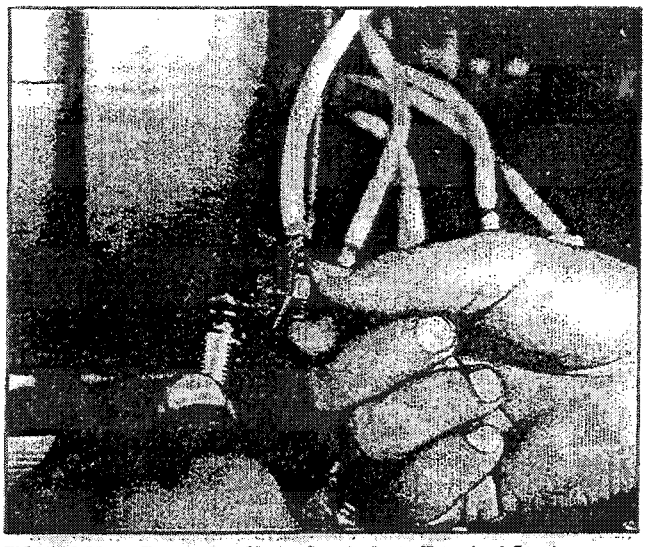

FIGURE 33 — Removing Motor Leads from Terminal Stud

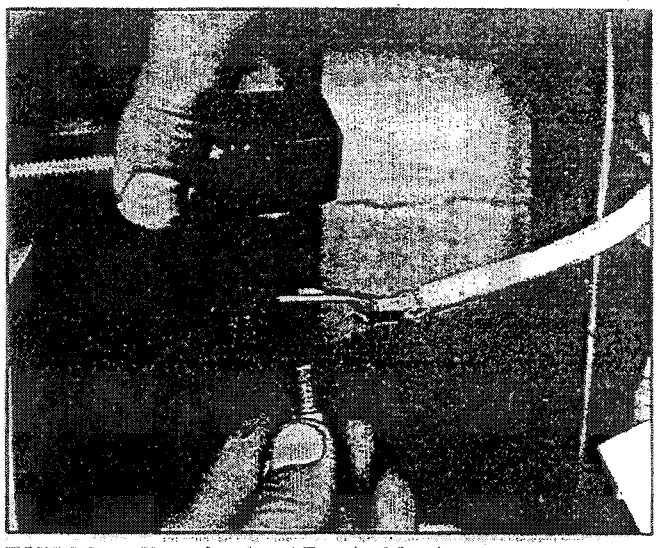

FIGURE 34 — Motor Lead and Terminal Stud

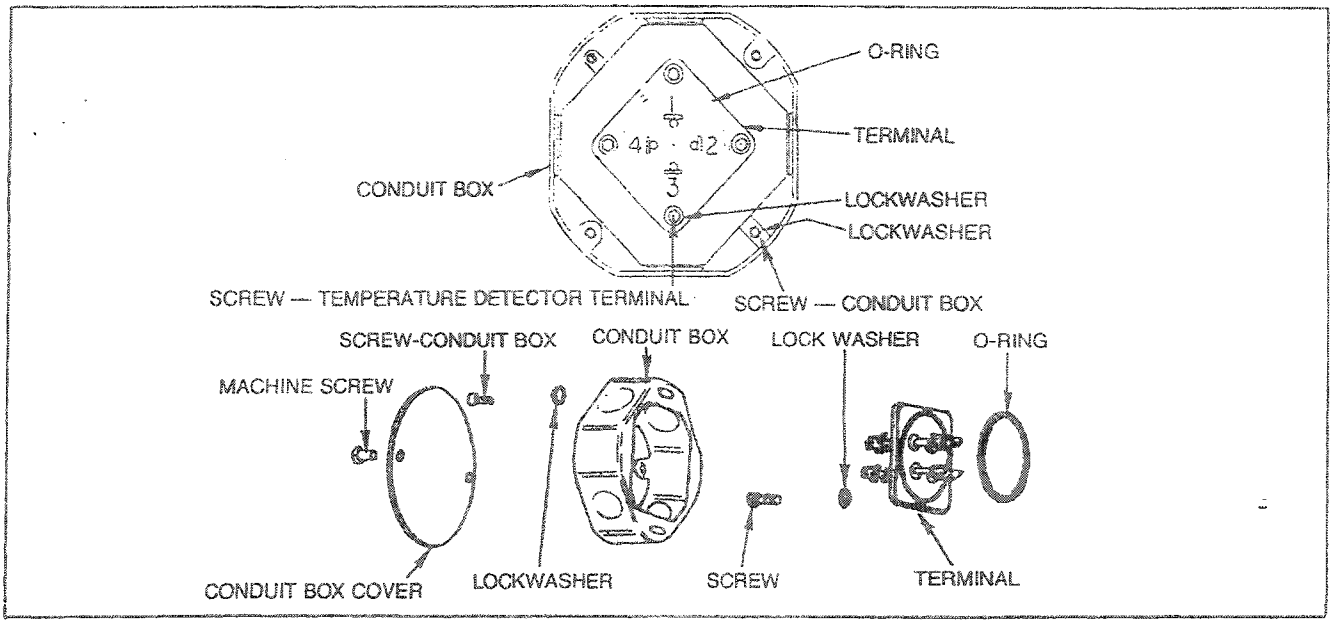

FIGURE 35 — RTD Terminal Board Assembly

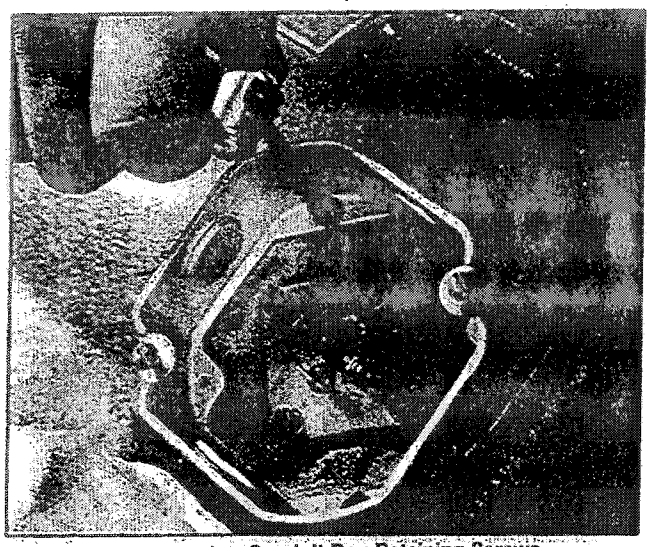

FIGURE 36 — Removing Conduit Box Retaining Screws

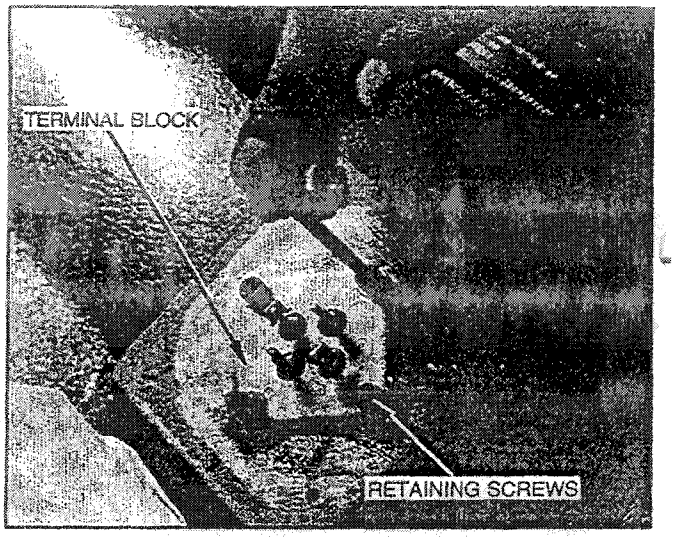

FIGURE 37 — Removing Temperature Detector Terminal Block Retaining Screws

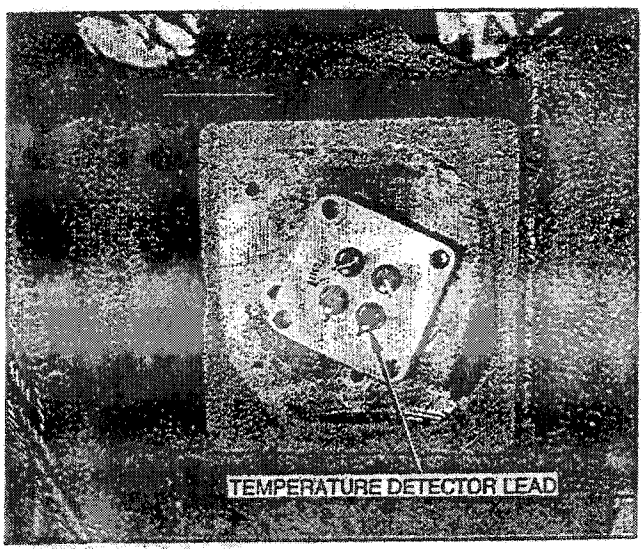

FIGURE 38 — Terminal Block

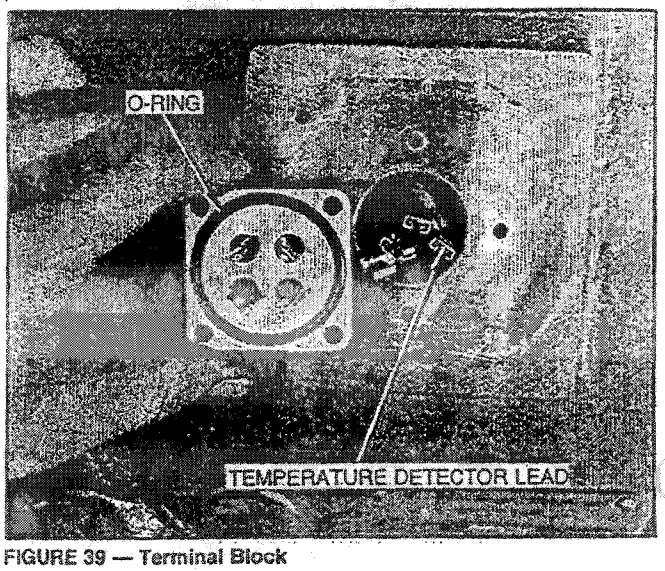

FIGURE 39 — Terminal Block

Main Terminal and Terminal Board Assembly

1. Attach motor leads to terminal studs. If terminal studs are to be reused, each stud has a number on it to coincide with the motor lead. If replacement terminal studs are used, number them appropriately. Motor leads also have an embossed number to coincide with the terminals. See Figure 40. Use brass bolts to attach motor leads to terminal studs. Figure 41 illustrates terminal stud components. Tighten to 10 ft.-lbs.
2. Insert new o-rings over terminal studs and lightly lubricate with Lubriplate.
3. Install the terminal board and a new gasket.
   a. Insert the motor terminals through the holes in the terminal board. The terminal board holes are labelled to coincide with embossed numbers on the terminal studs and motor leads. See Figure 42.
   b. Install spring washers and brass jam nuts over studs. Seat the studs in slot on inside of terminal board to prevent stud rotation, and hand tighten the jam nuts. See Figures 43 and 44.
   c. Position the terminal board gasket — do not lubricate this gasket, the terminal board or the motor casting. THE GASKET AND SEALING SURFACES SHOULD BE CLEAN AND DRY.
   d. Position the terminal board and gasket using the terminal board bolts. Tighten the terminal board bolts to approximately 25 ft.-lbs. torque or until gasket begins to extrude. See Figure 45.
   e. Tighten the brass jam nuts on terminals until the spring washers are completely compressed. See Figure 46.

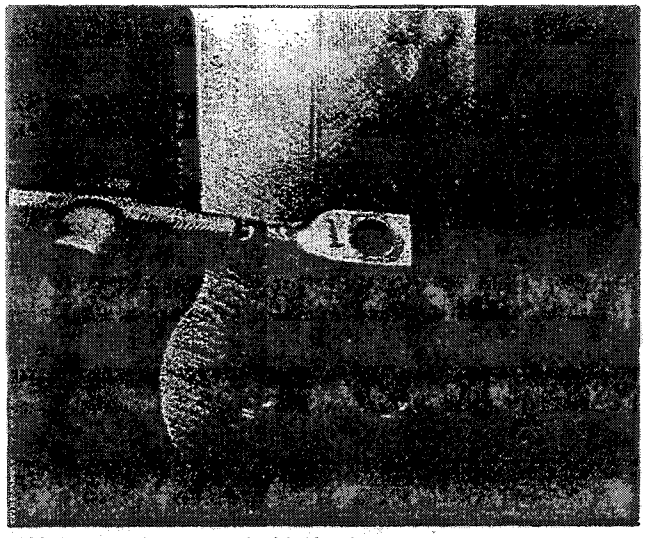

FIGURE 40 — Motor Lead with Number

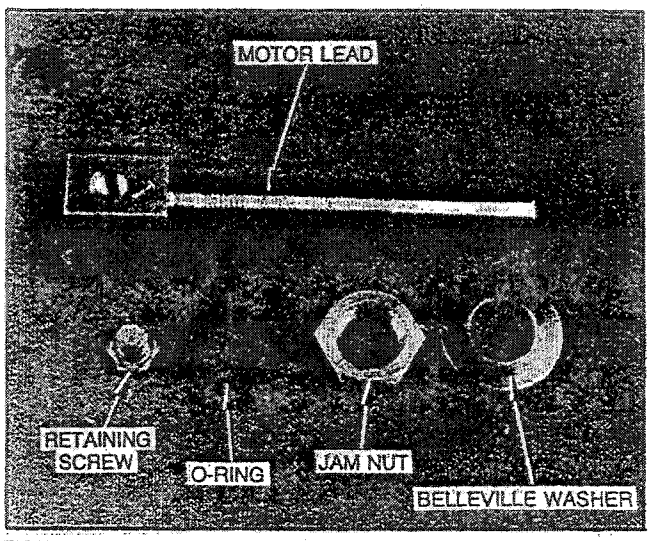

FIGURE 41 — Motor Terminal Stud

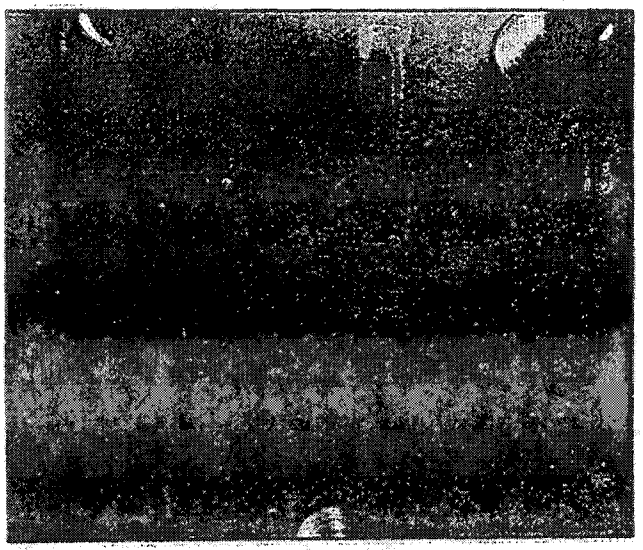

FIGURE 42 — Terminal Board Embossed Numbers

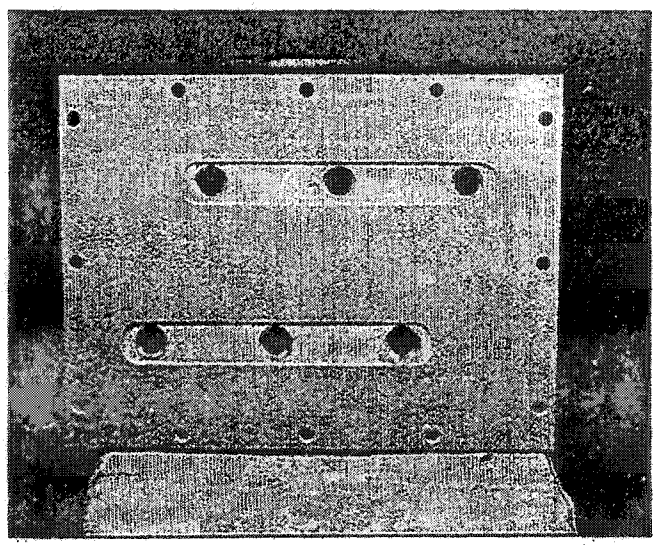

FIGURE 43 — Terminal Board

MOTOR ASSEMBLY

1. Rig and position the rotor in the stator.
   a. Take appropriate precautions to protect the rotor shaft during insertion into the stator. Use a length of brass pipe or similar to cover the rotor shaft.
   b. Put a sling around the pipe near the rotor and lift into position.
   c. Carefully move the rotor into position in the stator. See Figure 47.

      CAUTION: USE EXTREME CARE NOT TO STRIKE THE STATOR WINDINGS WITH THE ROTOR.

   d. Use the protective pipe to balance the rotor as it is moved into the stator. The ends of the laminated steel rotor core must be aligned with the ends of the laminated steel stator core. See Figures 48, 49 and 50.
   e. Lower the rotor assembly to rest on the stator core.
2. Install the opposite drive end inner bearing cap and new gasket on the shaft. Thoroughly clean the seal. See Figures 51, 52, 53 and 54. Inspect the seal grooves for scratches or damage, replace if necessary. (Install seal with oil drain at bottom. Make sure drain is clear.)

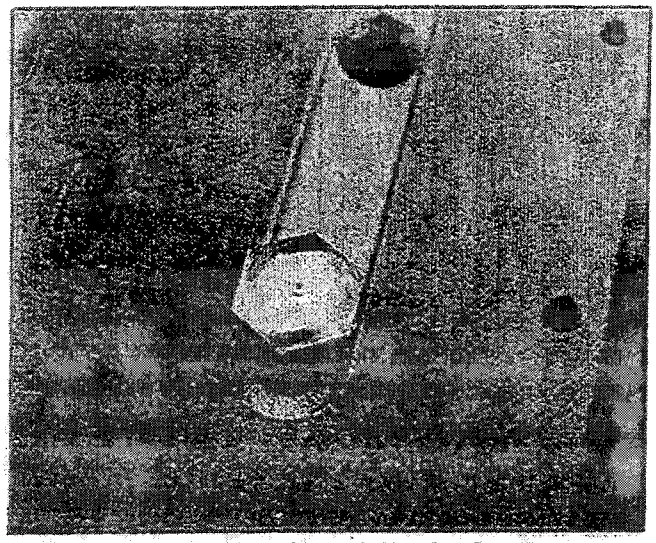

FIGURE 44 — Terminal Stud Seated in Terminal Board

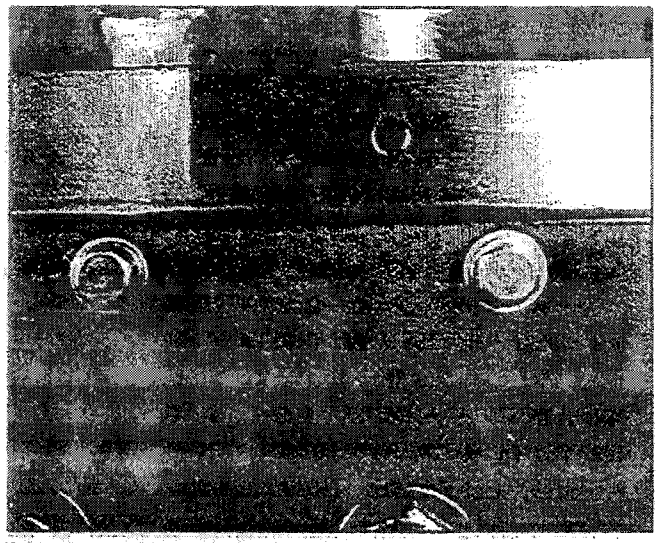

FIGURE 45 — Terminal Board Retaining Bolts

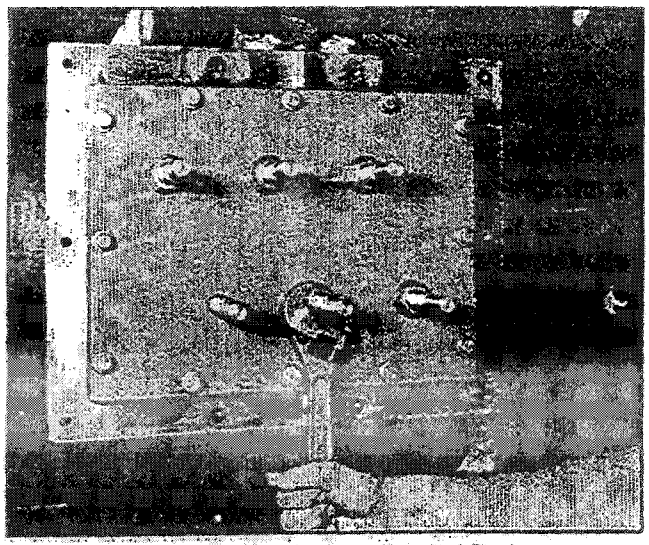

FIGURE 46 — Tightening Jam Nuts on Terminal Studs

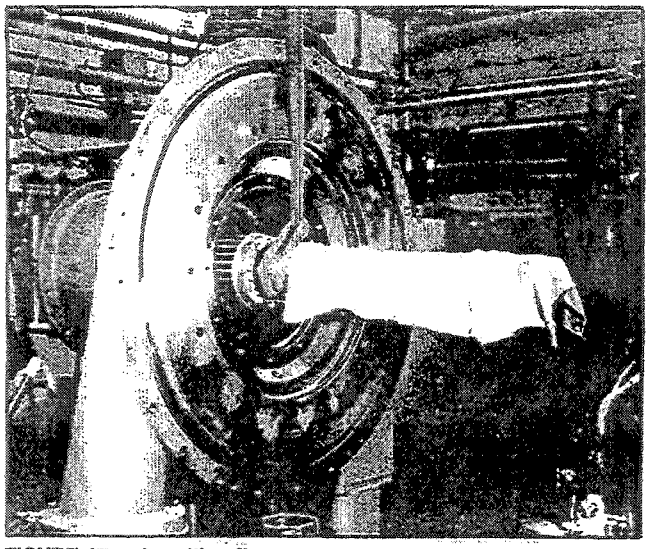

FIGURE 47 — Installing Rotor

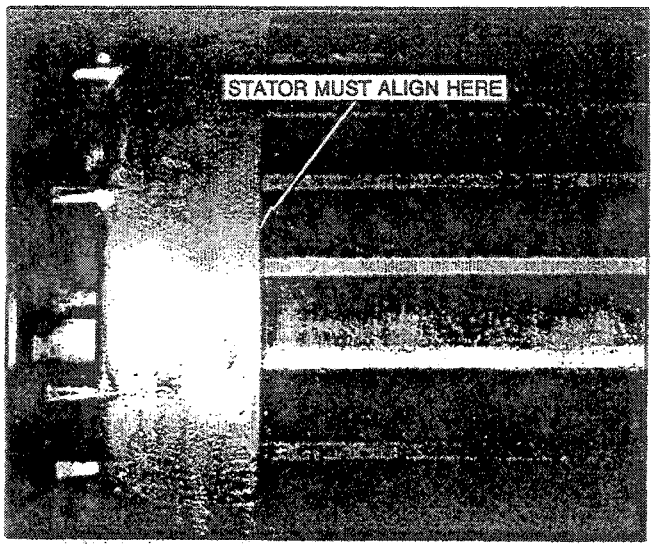

FIGURE 48 — Rotor Laminations

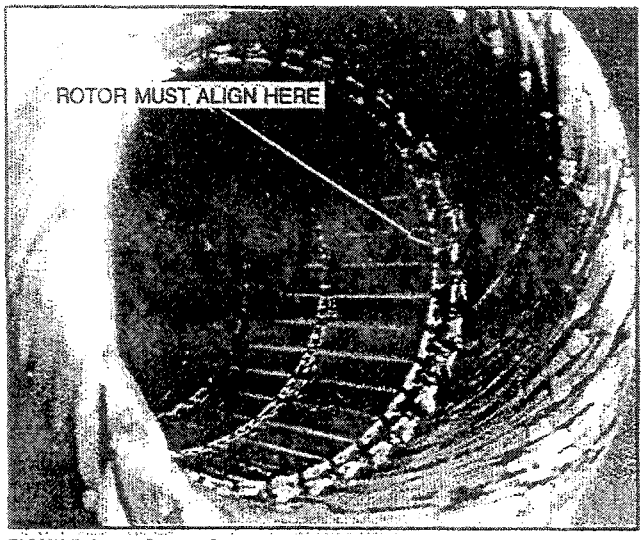

FIGURE 49 — Stator Core

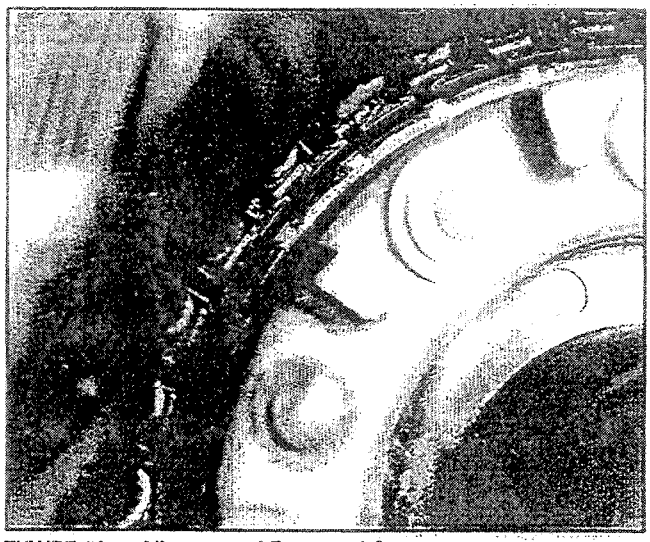

FIGURE 50 — Alignment of Rotor and Stator

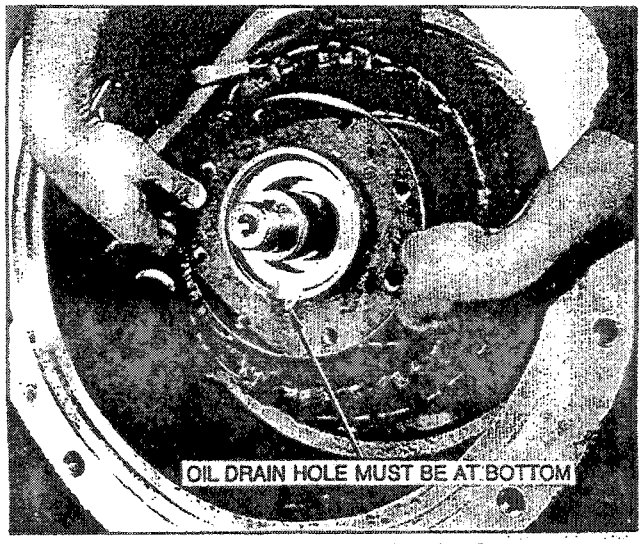

FIGURE 51 — Opposite Drive End Inner Bearing Cap

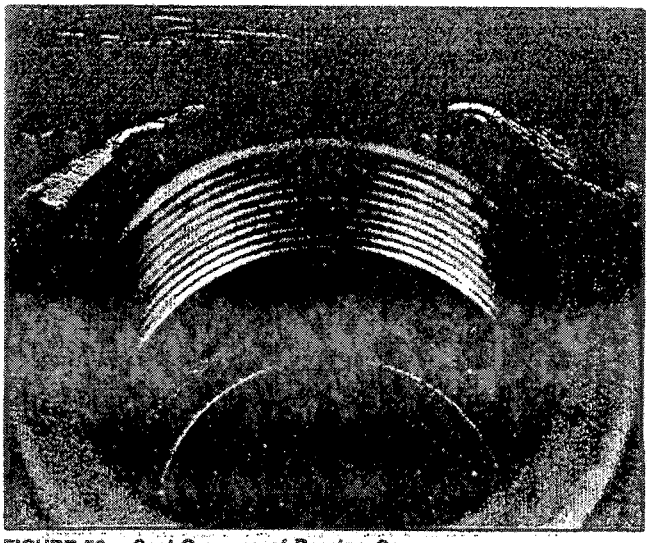

FIGURE 52 —Seal Grooves of Bearing Cap

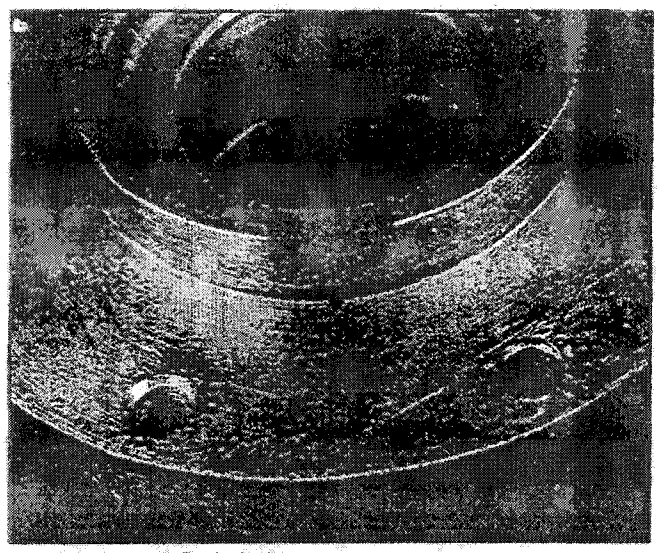

FIGURE 53 — Oil Drain Hole

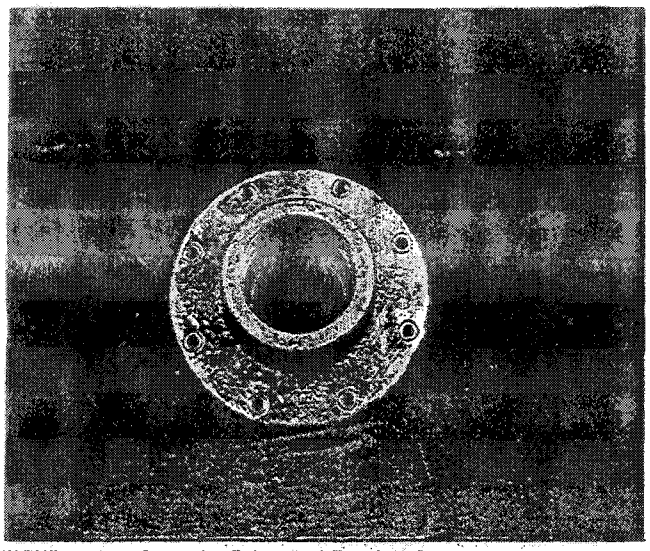

FIGURE 54 — Opposite Drive End Bearing Cap

3. Install the thrust bearing assembly. See Figure 55.

NOTE: The thrust bearing assembly is a matched set. Do not mix parts with another thrust bearing assembly. All mating bearing parts have a serial number inscribed on them to identify the assembly. (See Figures 58 and 59). The thrust bearing can be installed on the shaft in either direction, but it must be assembled properly. For example; one roller assembly will have a matching letter scribed after the serial number. This is to indicate that the bearing must be installed with the lettered roller on the lettered side of the tapered cup. It is recommended that the lettered components face outward from the motor to avoid confusion.

a. Examine the shaft for scratches or burrs and remove with a fine tooth file. See Figures 56 and 57.

NOTE: This is extremely important on the shaft O.D. where the thrust bearing cones are installed. If a scratch is present on the shaft O.D. carefully file it out. Polish it out with crocus cloth and check for high spots with a micrometer. All scratches must be removed or thrust bearing assembly will be extremely difficult.

b. Thoroughly clean the bearing components and shaft using Virginia 10 or an equivalent solvent. Do not use solvent which may leave residue. Remove all oil and debris. Heat the inner bearing assembly to approximately 250-275 F.

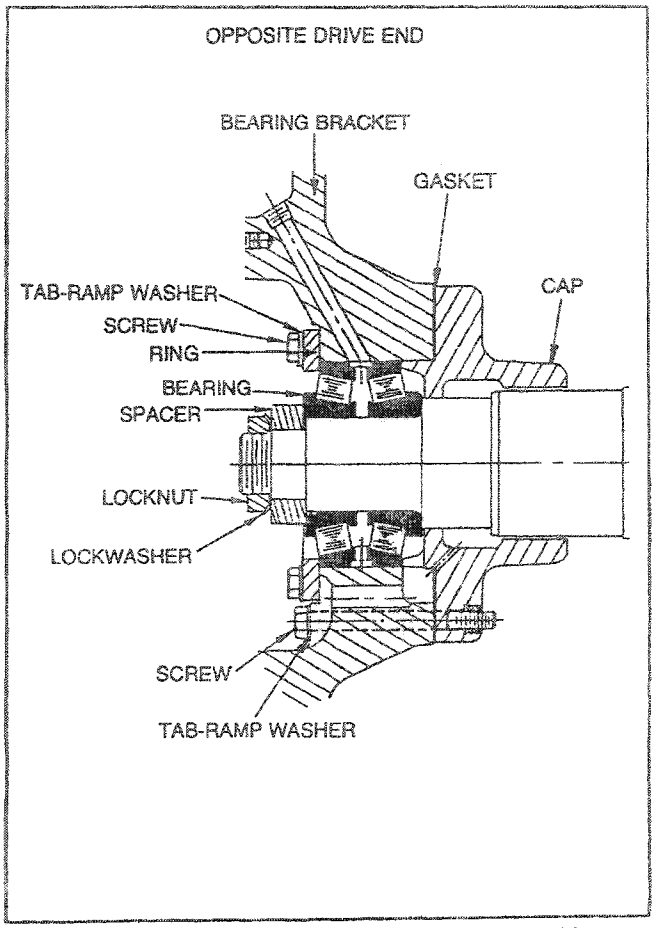

FIGURE 55 — Opposite Drive End Thrust Bearing Assembly Cross-Section



FIGURE 56 — Examining Shaft for Scratches and Burrs

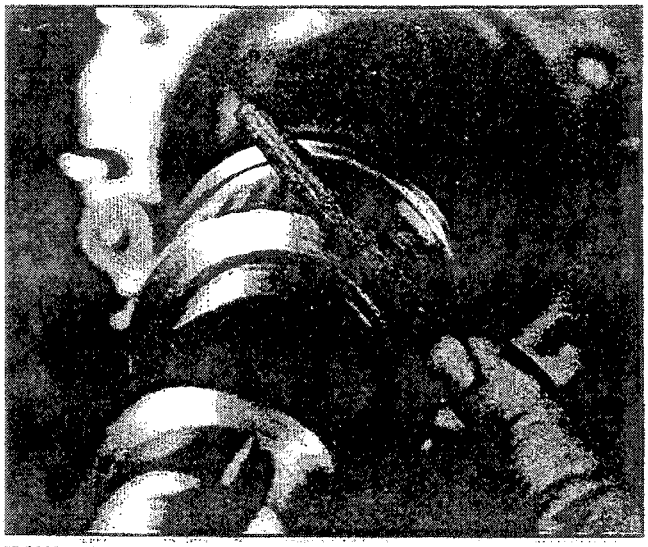

FIGURE 57 — Filing Scratch Out of Shaft

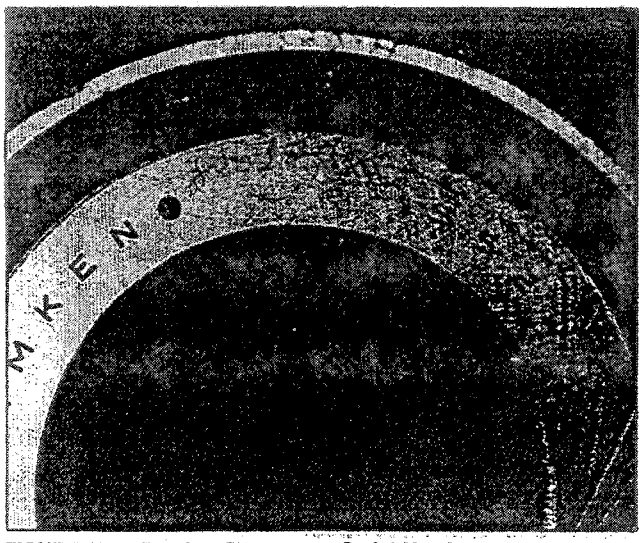

FIGURE 58 — Bearing Component Serial Numbers

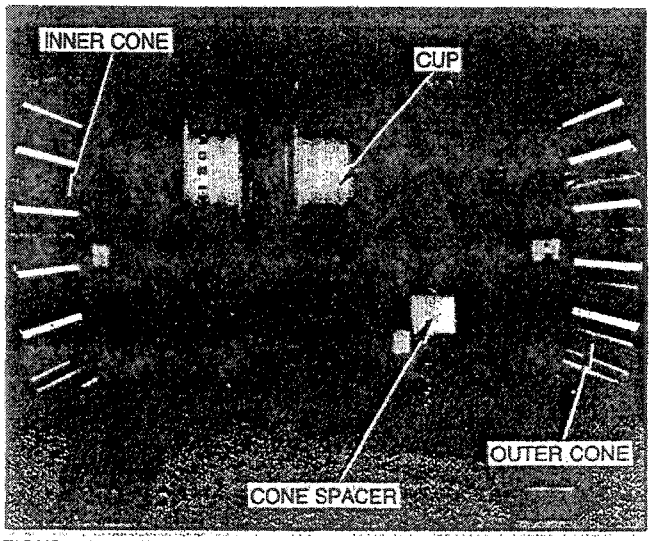

FIGURE 59 — Bearing Components

WARNING: USE WELDER'S GLOVES TO PROTECT THE HANDS AND PREVENT PERSONAL INJURY. HEAT THE BEARINGS DRY, USING A PORTABLE OVEN OR INDUCTION HEATER. DO NOT HEAT THE BEARINGS IN OIL. USE A SURFACE THERMOMETER TO MEASURE THE TEMPERATURE. DO NOT EXCEED 275 F.

c. Install the inner bearing assembly onto the shaft against the shaft shoulder. Hold in place for approximately 30 seconds. See Figure 60.

CAUTION: BEARING ROLLER INSTALLATION MUST BE ACCOMPLISHED QUICKLY BUT CAREFULLY WHILE BEARING IS HOT TO PROPERLY POSITION THE BEARING BEFORE THE BEARING COOLS AND SEIZES ONTO THE SHAFT. IF THE BEARING IS NOT PROPERLY POSITIONED, PULL IT OFF THE SHAFT AND START OVER.

d. After the bearing cools try to insert a 0.002 inch or 0.003 inch feeler gauge between the bearing and shaft shoulder. Figure 61 illustrates this procedure. If a 0.003 inch feeler gauge will fit, the bearing is not properly positioned. Pull it off, and start over.

e. Allow the shaft and inner bearing cone to cool for at least 15 minutes before the outer bearing cone is installed.

f. Install the spacer on the shaft. This is not a shrink fit and does not require heating. The spacer may be installed in either direction. See Figures 62 and 63.

g. Install the tapered cup. Double check for proper match marks with the outer bearing cone. See Figure 64.

h. Heat (as before) and install the outer bearing cone. Insert the bearing cone squarely on the shaft to prevent binding and seizure on the shaft. One person must hold and rotate the cup while another positions the hot bearing cone on the shaft. Push the roller assembly firmly against the cup until it cools while rotating the double cup. See Figure 65.

4. While the assembly is still warm, use a machined piece of pipe (see enclosed figures) to tap the outer bearing cone onto the shaft. See Figures 66. Figure 67 provides dimensions and construction of the pipe. If this is not done, excessive end float and resultant machine vibration will occur.

5. Insert a stiff wire into one of the oil inlet holes of the tapered cup and while observing through another oil inlet hole with a light, try to turn the inner spacer. See Figure 68. If the spacer rotates, the motor shaft will have too much end float and will vibrate. Using the machined pipe and hammer, tap the outer bearing and move it farther onto the shaft to take up the end float. Recheck the spacer for movement as previously described while the bearing is cooling.

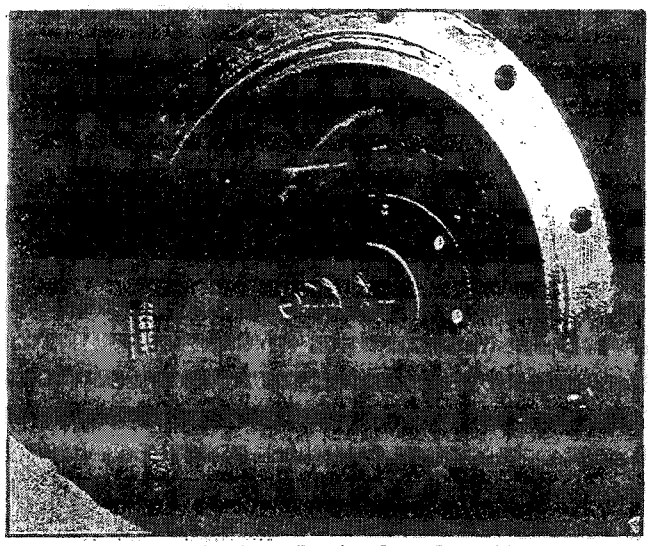

FIGURE 60 — Installing Inner Bearing Cone Assembly

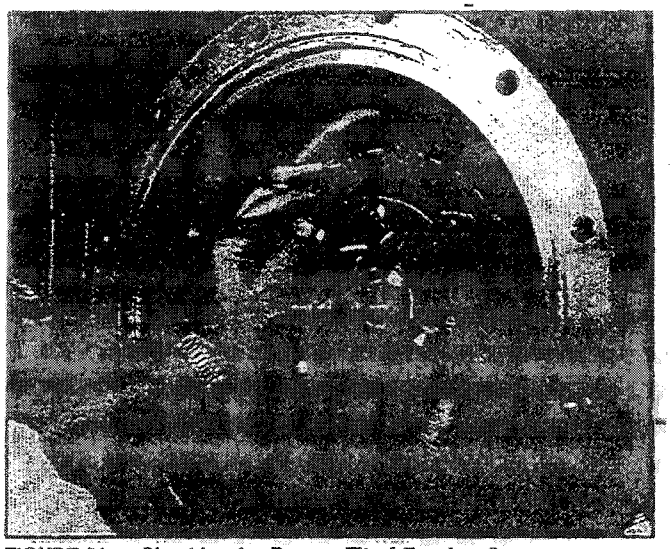

FIGURE 61 — Checking for Proper Fit of Bearing Cone

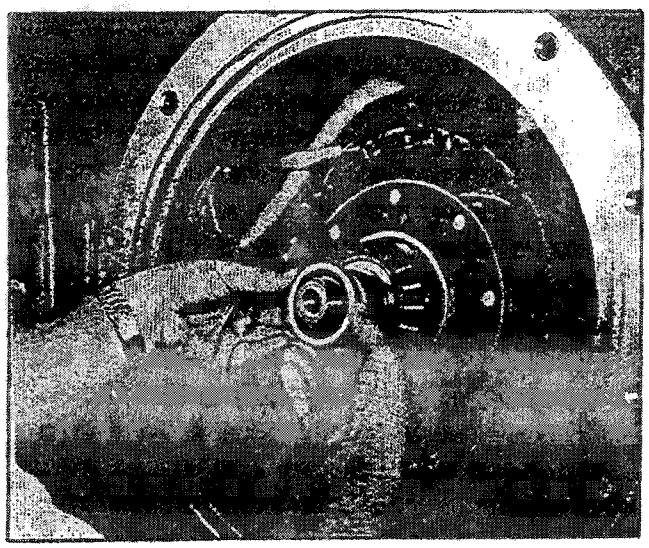

FIGURE 62 — Installing Bearing Cone Spacer

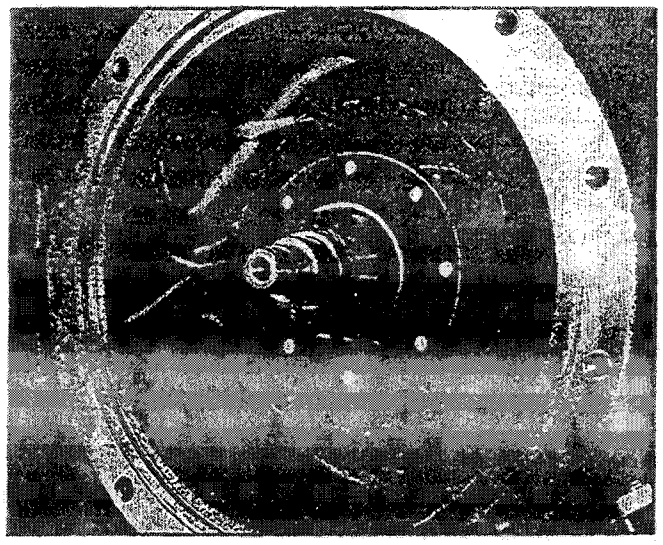

FIGURE 63 — Cone Spacer Installed

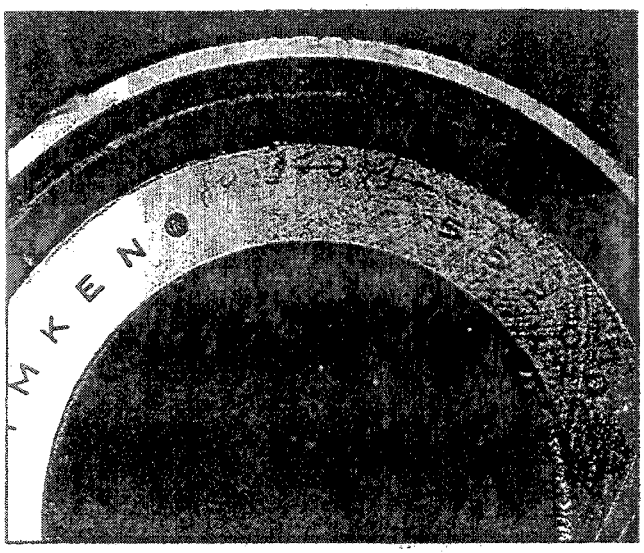

FIGURE 64 — Outer Bearing Cone Assembly

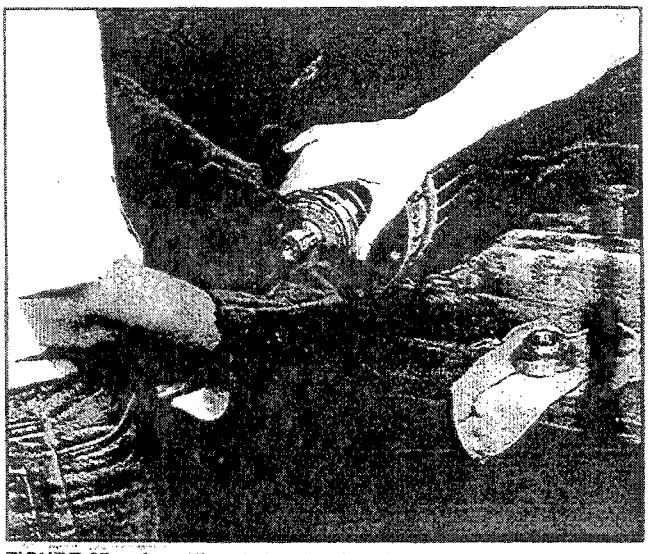

FIGURE 65 — Installing Outer Bearing Cone

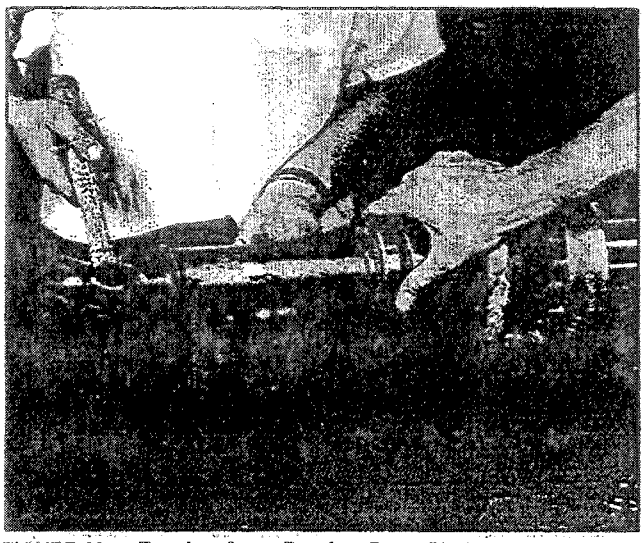

FIGURE 66 — Tapping Outer Bearing On to Shaft

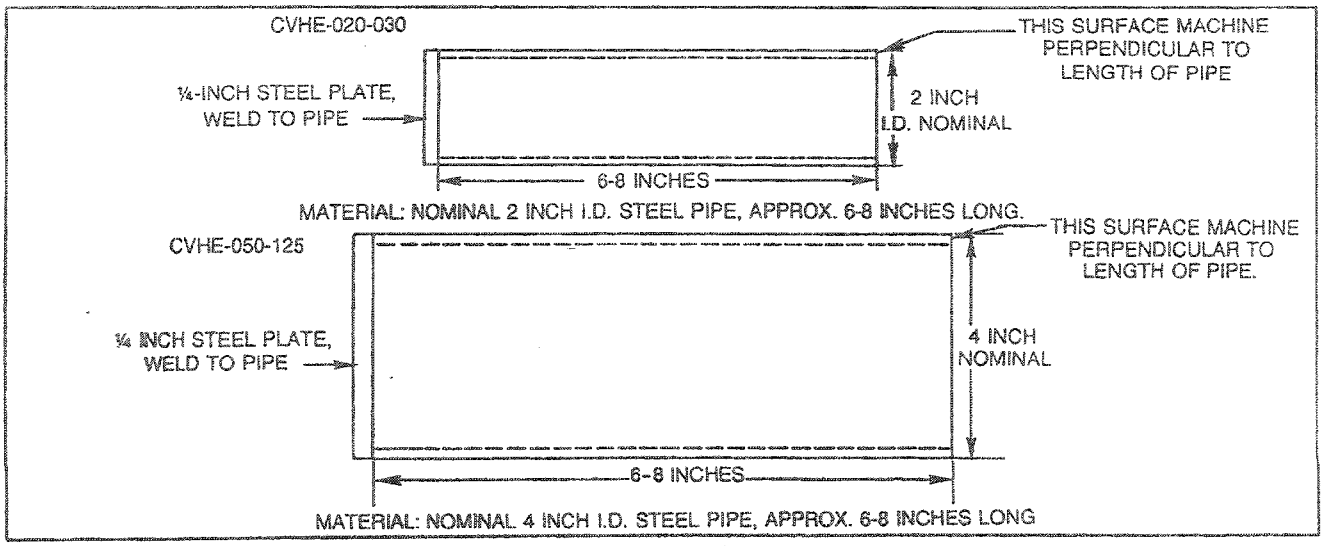

FIGURE 67 — Machined Pipe Dimensions

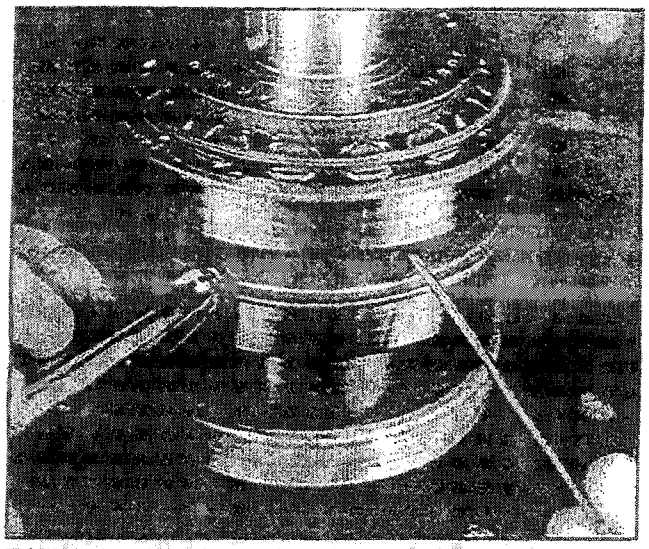

FIGURE 68 — Checking for Cone Spacer Rotation

6. Install the spacer, lockwasher and locknut on the shaft. See Figure 69. The lockwasher has a tab that fits into the keyway on the motor shaft. Tighten the locknut to 250 ft.-lbs. torque. Line up one tab of the lockwasher with a slot in the locknut and bend tab over to secure. See Figure 70. Oil the thrust bearing thoroughly using compressor oil.
7. Install two 6 inch or 8 inch guide rods through gasket into two random holes in the inner bearing cap. See Figure 71. The guide rods serve to align the bearing cap with the bearing bracket. Be sure the small oil drain hole in the seal and gasket are on the bottom. See Figure 72.
8. Install the opposite drive end bearing bracket. Use the following procedure.
   a. Thoroughly clean the bearing bracket and o-ring groove.
   b. Coat the bearing bracket and motor flange o-ring grooves with a ¼-inch bead of Loctite 515 "Gasket Eliminator" sealant. Place the new o-ring in the bearing bracket o-ring groove. Lubricate the outside of the bearing cap with the proper compressor oil to ease bearing bracket insertion on the bearing. See Figure 73.
   c. Hoist the bearing bracket into position.
   d. Install two guide rods on the motor barrel to line up the bearing bracket.
   e. Insert the bearing cap guide rods into proper holes in the bearing bracket and slide the bracket into position. Again verify the bearing cap is positioned w/oil drain hole down.
   f. Remove the lifting clevis and push the bracket firmly against the motor barrel. Bolt in position. See Figures 74 and 75.
   g. Loosely bolt the inner bearing seal to the bearing bracket. Do not tighten at this time. Use the bolts with the tab-ramp washers. Use guide rods to line up the seal and inner bearing cap. See Figure 76. Remove when finished. The drive end bearing bracket must be in place before the seal bolts are tightened.

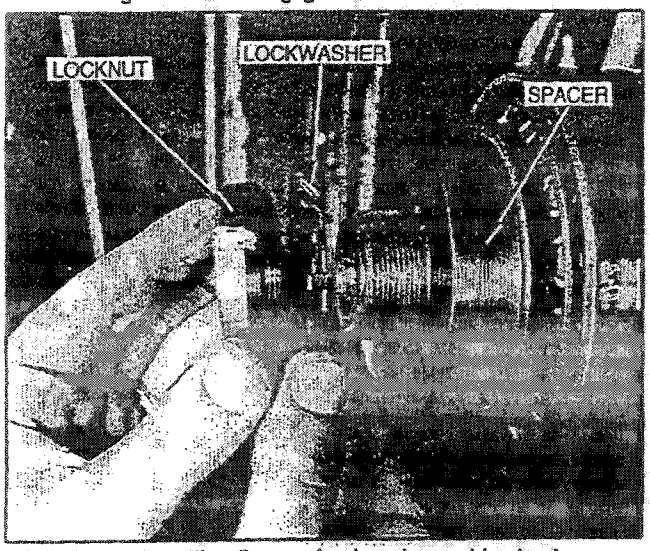

FIGURE 69 — Installing Spacer, Lockwasher and Locknut

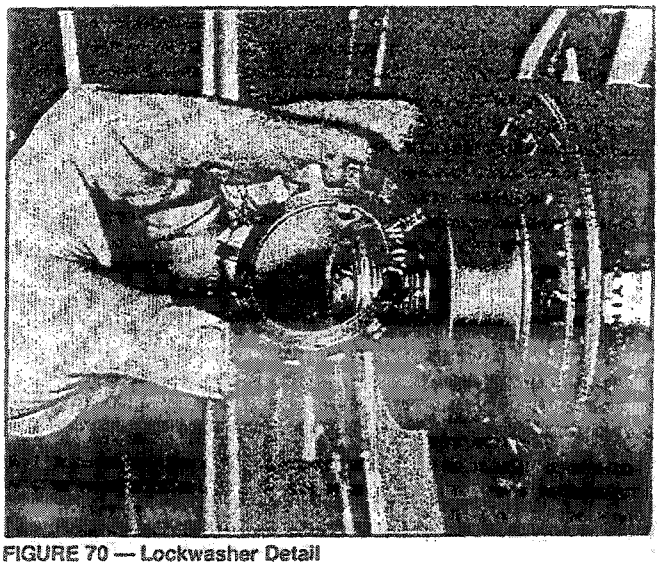

FIGURE 70 — Lockwasher Detail

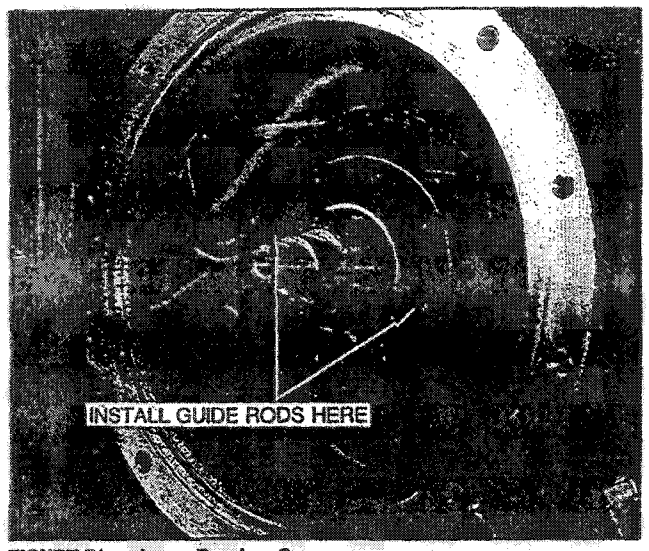

FIGURE 71 — Inner Bearing Cap

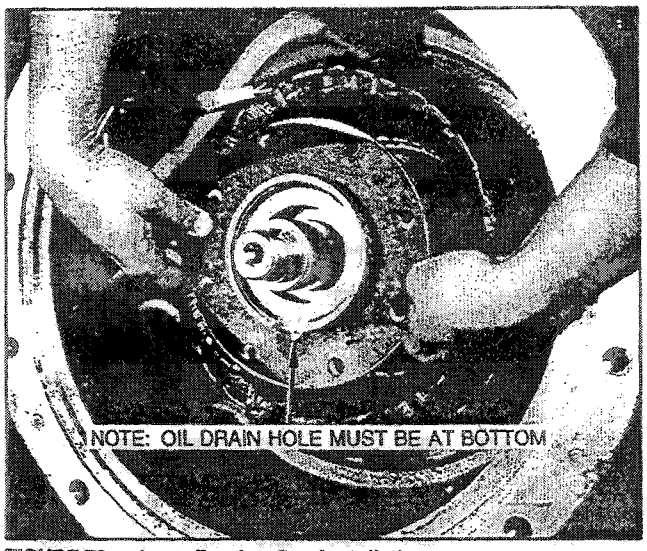

FIGURE 72 — Inner Bearing Cap Installation

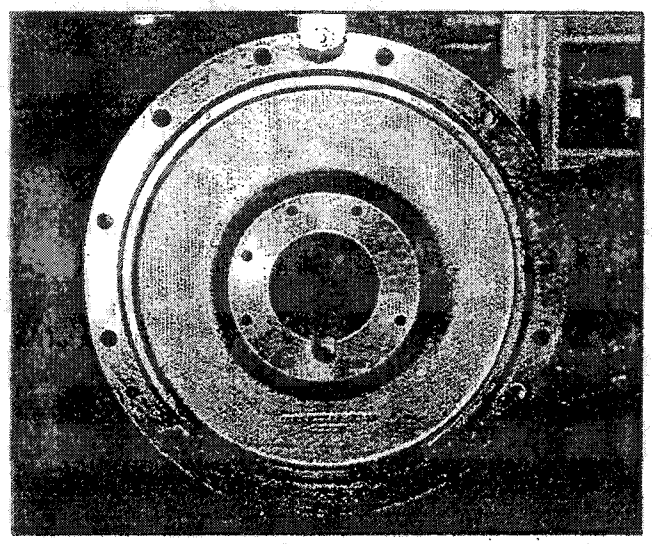

FIGURE 73 — Inner Bearing Cap as Viewed from Motor Interior

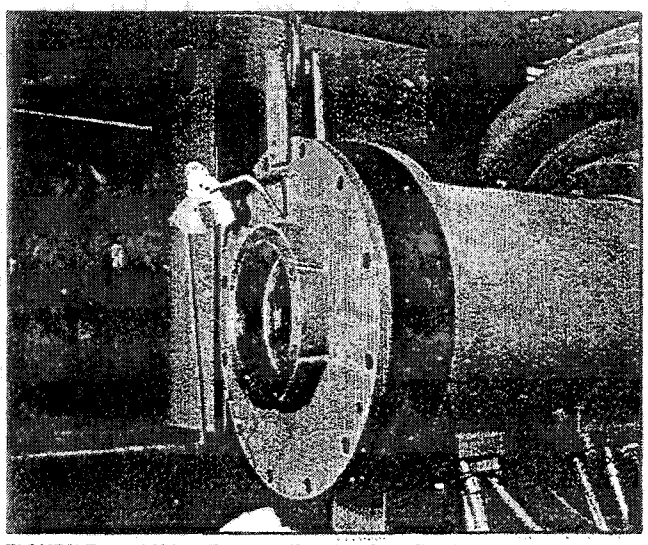

FIGURE 74 — Lifting Bearing Bracket into Position

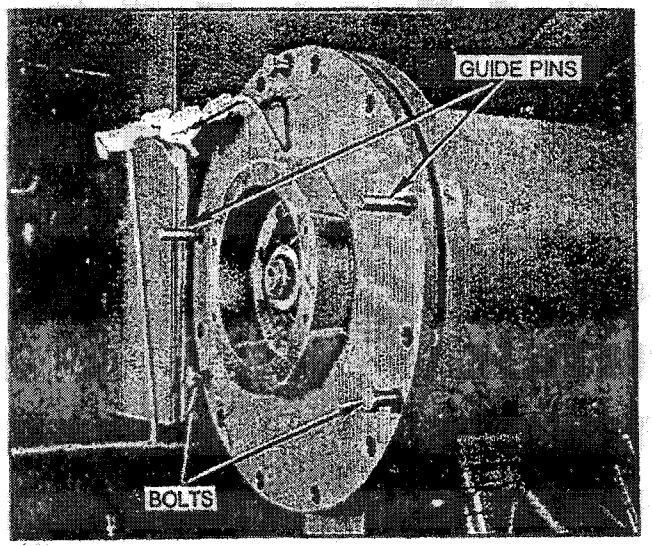

FIGURE 75 — Bearing Bracket in Position

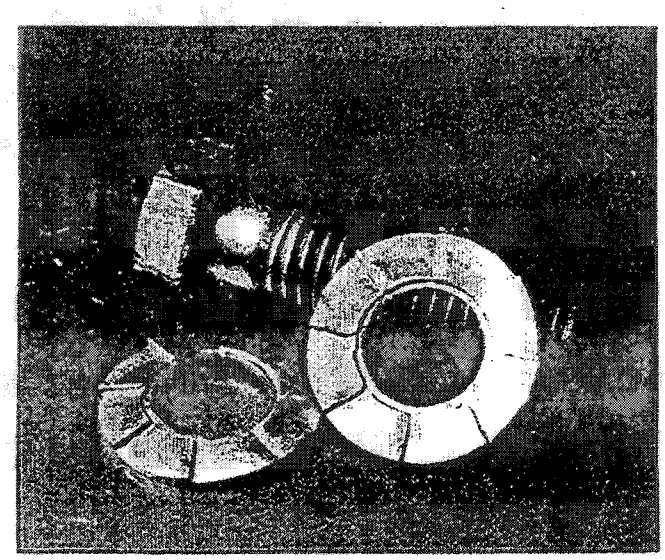

FIGURE 76 — Bolt and Tab-Ramp Washer

9. Place the inner bearing cap over the drive end of the motor shaft. Use the following procedure. See Figure 77.
   a. Clean the drive end seal thoroughly. Replace if worn excessively.
   b. Install two 6 inch or 8 inch guide rods in any two holes in seal.
   c. Install gasket on seal and position on shaft.
10. Install the drive end bearing bracket.
   a. Clean the bracket thoroughly, especially the o-ring groove.
   b. Coat the bearing bracket o-ring groove with a ⅛-inch bead of Loctite 515 "Gasket Eliminator." Place the new o-ring in the bearing bracket groove. Apply a ⅛-inch bead of the same sealant to the mating surface.
   c. Insert two guide rods, 180 degrees apart on the horizontal centerline, into the motor barrel to align the bearing bracket. See Figure 78.
   d. Attach a hoist to bearing bracket with a clevis and lift into position. Align the seal rods and bearing bracket, verify the seal oil drain is on the bottom and move into position. See Figure 79.
   e. Remove the clevis and install the bearing bracket bolts with tab-ramp washers. Tighten the bolts.
   f. Insert two bolts into the inner seal to hold in place and then remove the guide rods. This allows clearance for bearing installation.

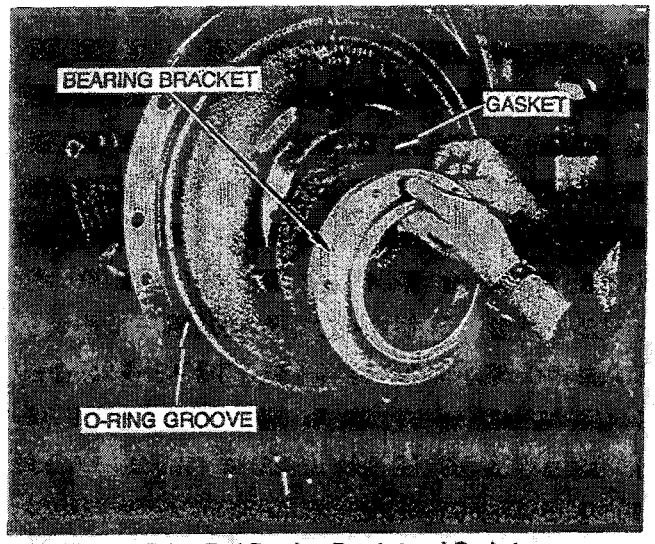

FIGURE 77 — Drive End Bearing Bracket and Gasket

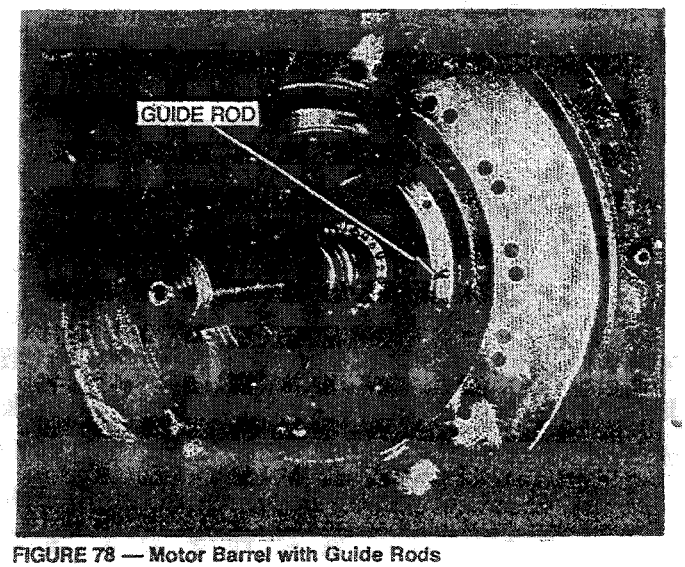

FIGURE 78 — Motor Barrel with Guide Rods

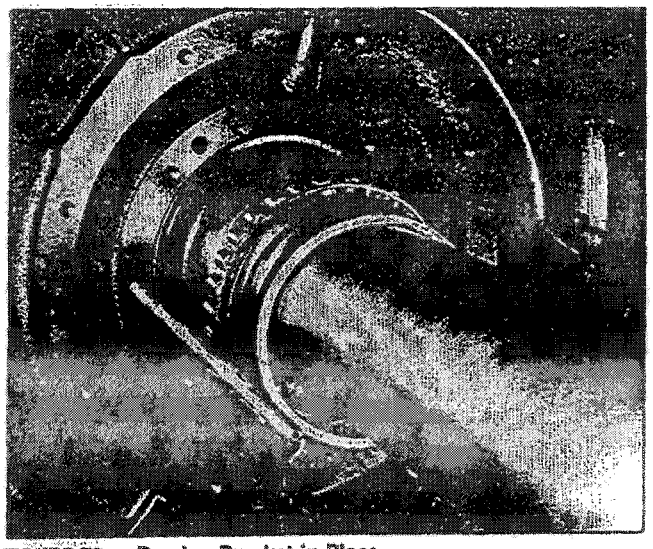
FIGURE 79 — Bearing Bracket in Place

11. Install the roller bearing on the shaft.

a. Thoroughly clean all oil and dirt off the bearing.

b. Heat the bearing dry — do not use oil — to approximately 250-275 F.

CAUTION: EXAMINE THE DRIVE END ROLLER BEARING. THE INNER RACE EDGE WITH THE LARGE RADIUS MACHINED ON IT MUST FACE TOWARDS THE SHAFT SHOULDER. SMALL CHAMFERED EDGE MUST FACE TOWARDS THE OUTSIDE OF THE MOTOR. SEE FIGURE 80.

c. Insert the hot bearing onto the shaft with the more rounded bearing towards the motor as described in the CAUTION above. See Figure 81. Insert the bearing squarely on the shaft to avoid binding and seizure on the shaft. Push the bearing against the motor shaft shoulder and hold in this position for approximately 30 seconds until the bearing cools and binds to the shaft.

d. Slide the drive end bearing spacer against the bearing and lock into place with large snap ring. See Figure 82.

NOTE: This spacer does not require heating to install on shaft.

e. Install the outer race in the bearing bracket. Clean thoroughly and lubricate with WF-68 oil. It may be necessary to lift the shaft to insert the race in the bearing bracket. It may also be necessary to lightly tap the race into position. See Figures 83 and 84.

f. Install the outer race retaining ring. Use bolts with tab-ramp washers. See Figure 85.

NOTE: These bolts also secure the inner bearing cap seal. Install two guide rods in the seal to aid in centering the inner seal and tighten the bolts. Remove the guide rods and insert and tighten the remaining bolts to 24 ft.-lbs. torque. Lightly oil both bearings. Rotate the shaft by hand. If the shaft does not rotate smoothly it may be necessary to readjust the drive end inner seal. Install the remaining bolts to secure the opposite drive end inner bearing cap. Center the seal and check to see that the shaft rotates freely. Readjust the seal location if necessary. Secure the opposite drive end outer bearing race retaining ring. Bolt into position using bolts with tab-ramp washers.

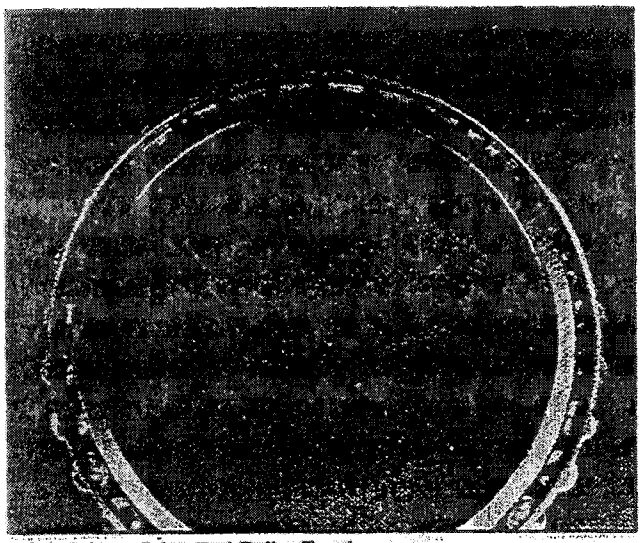

FIGURE 80 — Drive End Roller Bearing

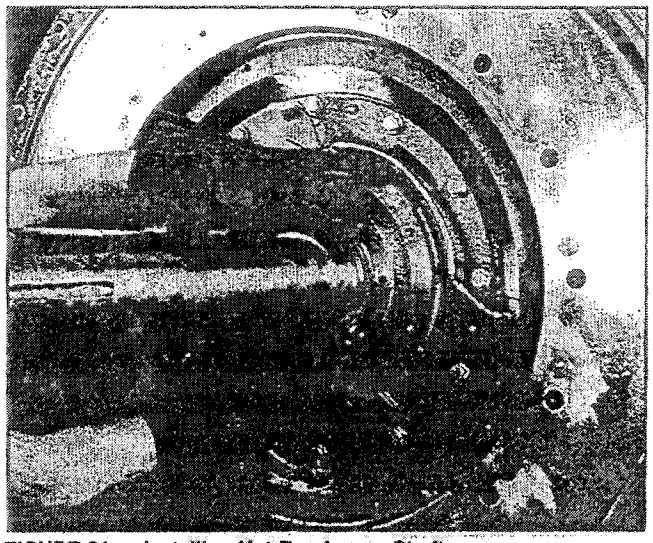

FIGURE 81 — Installing Hot Bearing on Shaft

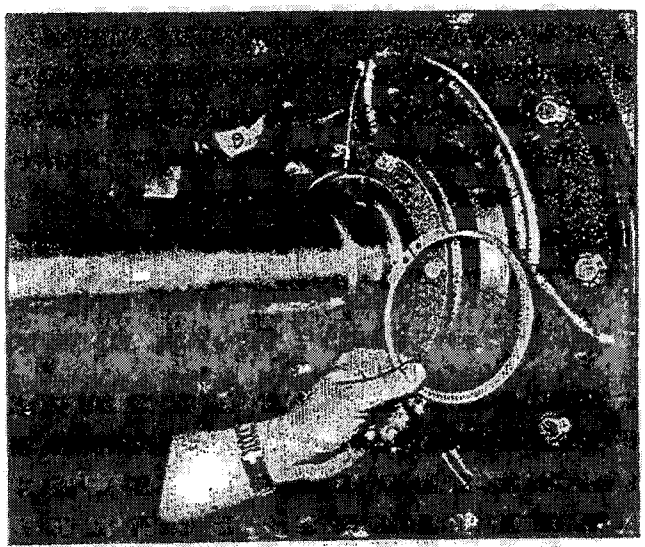

FIGURE 82 — Drive End Bearing Spacer Retaining Snap Ring

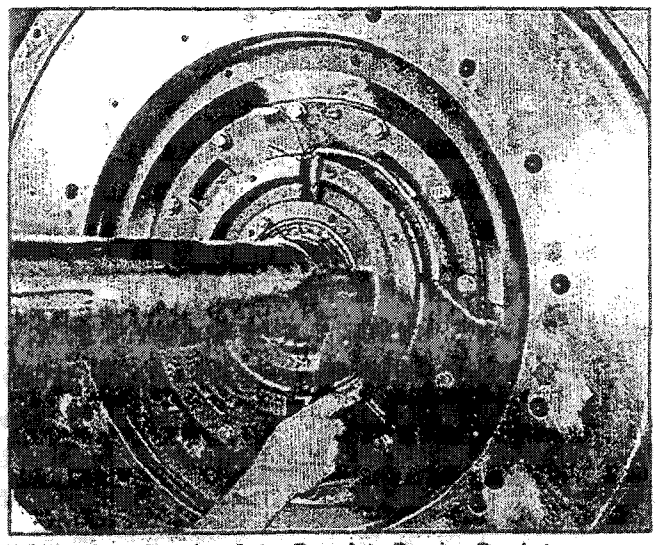

FIGURE 83 — Tapping Outer Race into Bearing Bracket

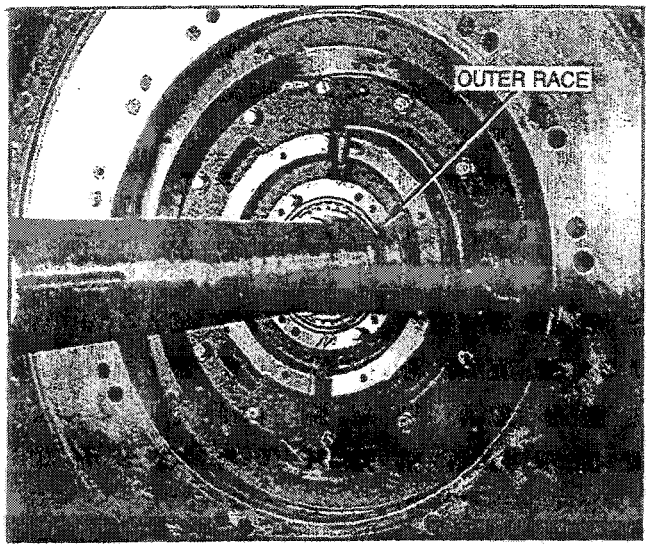

FIGURE 84 — Outer Race Installed

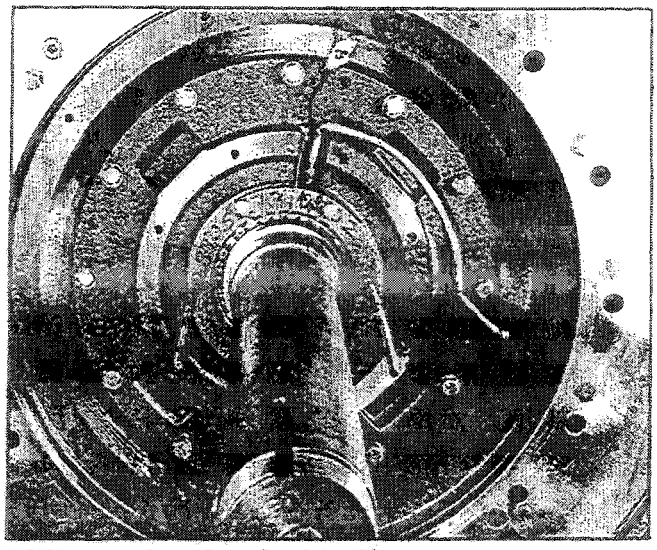

FIGURE 85 — Outer Race Retaining Ring

12. Check the motor shaft end float.

    a. Mount a dial indicator with the dial stem on the shaft shoulder to read the shaft end float. See Figure 86.

    b. Mount a 1 inch × 1 inch steel bar and 1 inch diameter ball bearing on opposite drive end of motor as shown in Figures 87 and 88 to push the motor shaft towards the compressor end. Rock the shaft back and forth to load the roller bearing while tightening the steel bar. Tighten the bar only enough to take up all the end play. Zero the dial indicator. Figure 89 provides dimensions for fabricating the bar.

    c. Remove the steel bar and ball bearing from the opposite drive end of the motor.

    d. Using long threaded rods inserted in the bearing bracket to attach the steel bar and ball bearing to the drive end of the motor. See Figure 90.

    e. Slowly tighten the bar and rock the shaft to take up end float in the opposite direction to that previously indicated. Read the dial indicator to determine the total end float. Total end float is 0.004 inch maximum, 0.002 inch minimum.

    f. If the end float is excessive, remove the thrust locknut, lockwasher, and spacer. Tap the outer bearing towards the inner cone. Reinstall locknut, lockwasher, and spacer. Recheck the end float. Use the machined pipe as previously used to tap the outer bearing towards the inner cone. Recheck the end float.

13. Reconnect the oil supply lines on the drive end bearing bracket.

14. Install the opposite drive end cover plate with a new o-ring. Apply a ⅛-inch bead of Loctite 515 "Gasket Eliminator" to the cover plate o-ring groove. Place the new o-ring in the cover plate groove. Apply a ⅛-inch bead of the same sealant to the mating surface and install the cover plate.

15. Reconnect the oil supply and drain lines on the opposite drive end of the motor.

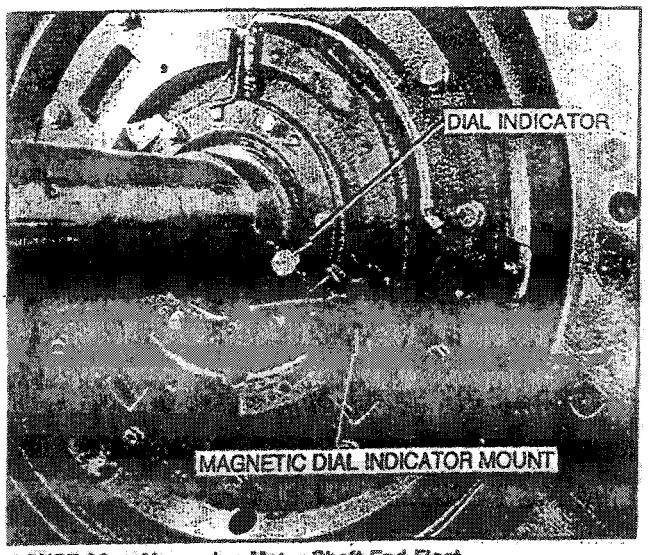

FIGURE 86 — Measuring Motor Shaft End Float

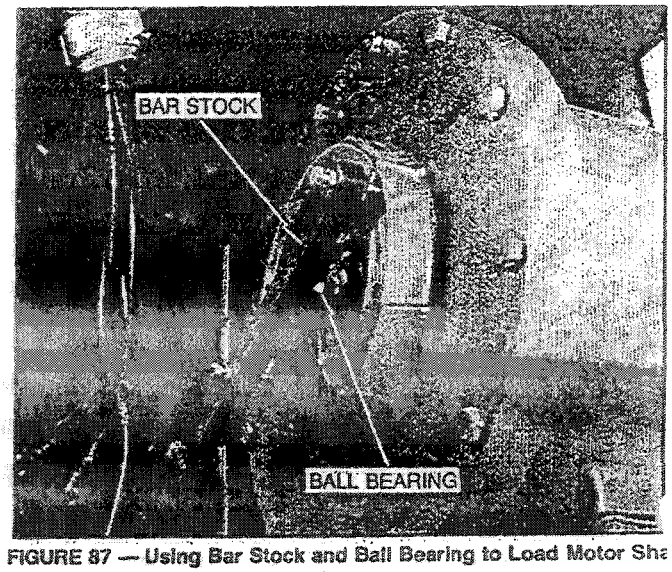

FIGURE 87 — Using Bar Stock and Ball Bearing to Load Motor Sha

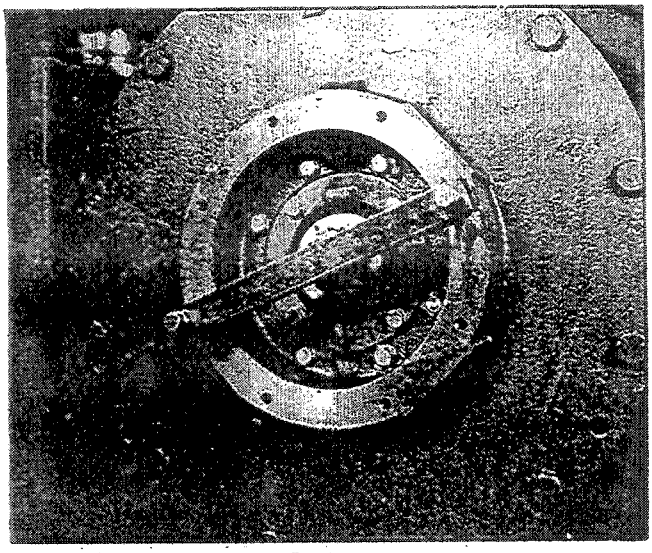

FIGURE 88 — Loaded Motor Shaft

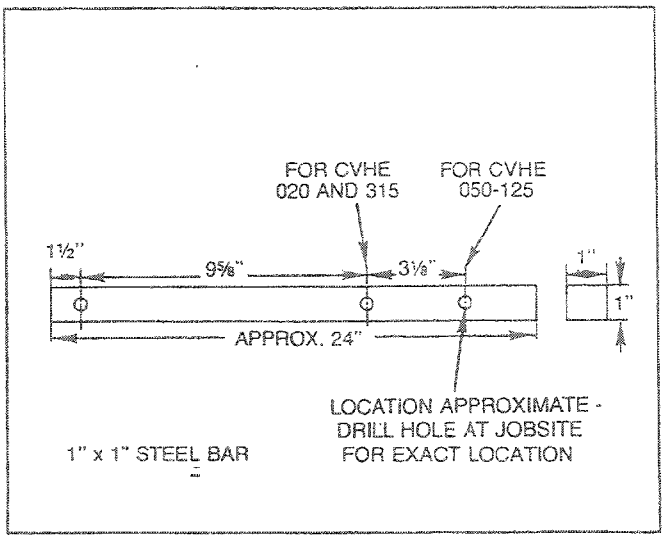

FIGURE 89 — Bar Stock Dimensions

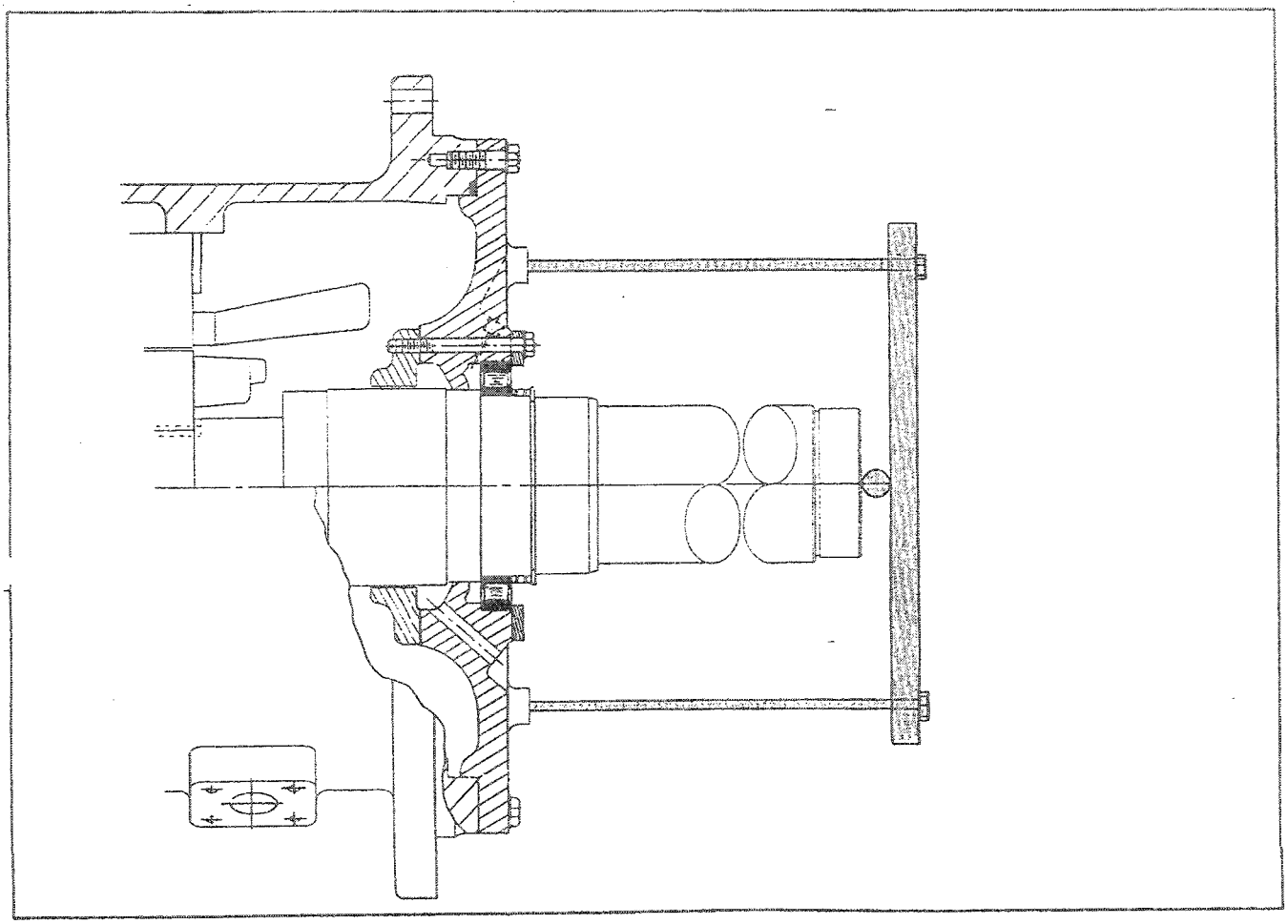

FIGURE 90 — Loading Motor Shaft from Drive End of Motor

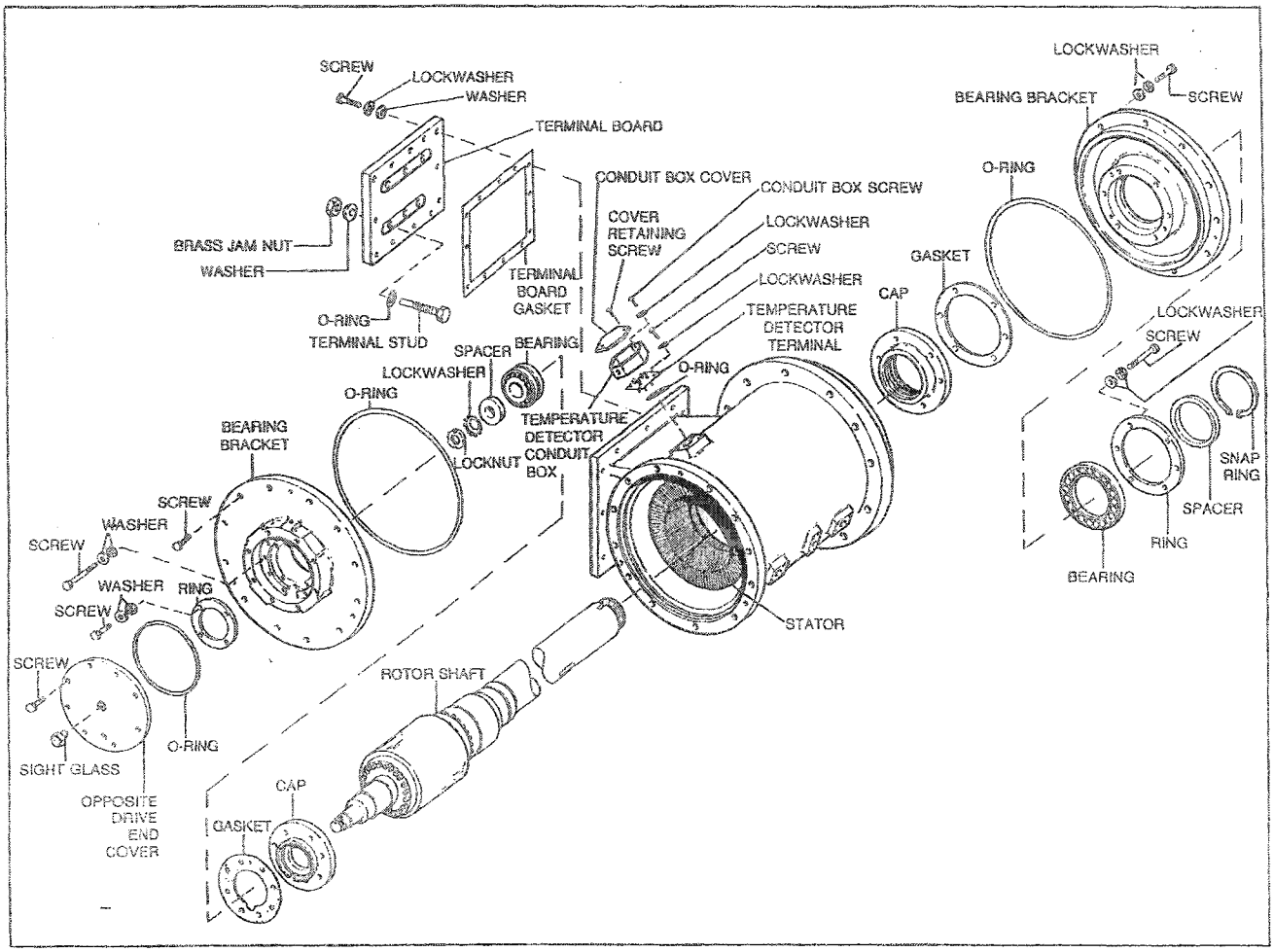

FIGURE 91 — Explodad View of Compressor Motor

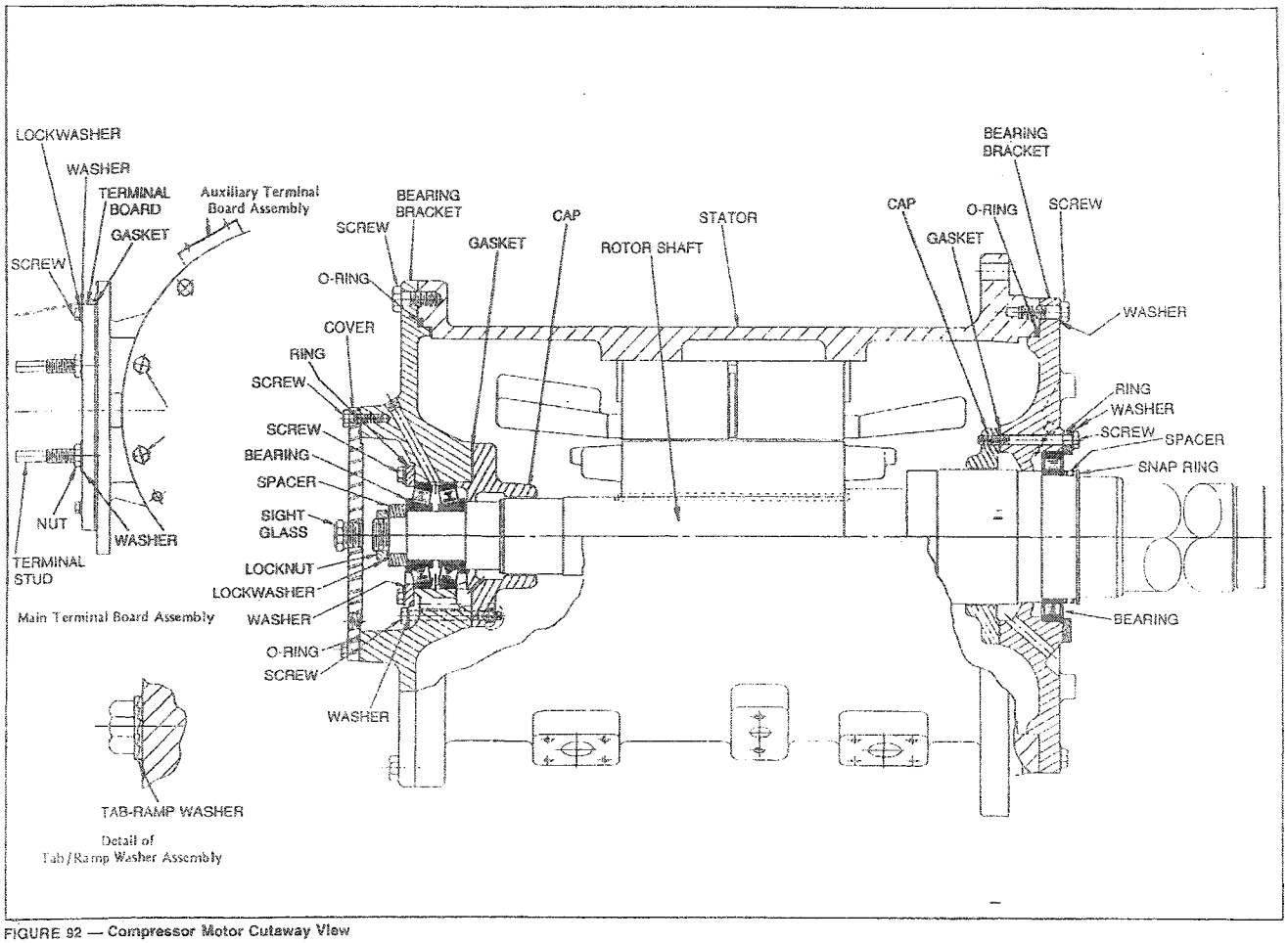

FIGURE 92 — Compressor Motor Cutaway View

CVHE Compressor Teardown

Unit Serial Number _____

Reason For Teardown _____

Disassembly (Reassembly) CVHE Comp	Ref.	Clearances		
		Nominal	Disassembly	Reassembly
1. Remove tang operator, 1st stage vane assembly (41) Install tang operator, 1st stage vane assembly Capscrew Torque	1.	_____		_____
2. Remove 1st stage inlet vane assembly (40) Install 1st stage inlet vane assembly	2.			
3. Measure 1st stage impeller nose seal clearance (39) Measure 1st stage impeller nose seal clearance Seal Bolt Torque	A.	_____ _____	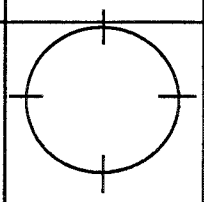	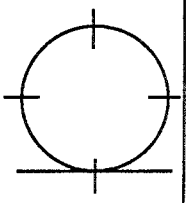
4. Remove 1st stage impeller nose seal (38) Install 1st stage impeller nose seal	3.			
5. Remove 1st stage suction cover (37) Install 1st stage suction cover Suction Cover Bolt Torque	4.	_____		_____

	Ref.	Clearances		
		Nominal	Disassembly	Reassembly
6. Measure 1st stage impeller nose runout (36) Measure 1st stage impeller nose runout	A.			
7. Measure detail "A" clearances (35) Measure Detail "A" clearances - note If diffuser plate must be adjusted to obtain clearance, then 1st stage impeller must be removed & shaft seal clearances rechecked	S. R.			
8. Remove impeller locknut, lock washer and spring washer (34) Install impeller locknut, lock washer and spring washer Locknut Torque	5.			
9. Remove 1st stage impeller & shims (33) Install 1st stage impeller (32) Install 1st stage impeller shims	6.			
10. Measure shaft runout (31) Measure shaft runout (oil bearings on reassembly)				
11. Measure 1st stage shaft seal clearance (30) Measure 1st stage shaft seal clearance Seal Bolt Torque	8.			

	Ref.	Clearances		
		Nominal	Disassembly	Reassembly
12. Remove 1st stage shaft seal (29) Install 1st stage shaft seal	7.			
13. Remove 1st stage shaft impeller spacer (28) Install 1st stage shaft impeller spacer	8.			
14. Remove 1st stage diffuser plate 15. Remove 1st stage shaft impeller spacer shim (27) Install 1st stage diffuser plate Plate Bolt Torque (26) Install 1st stage spacer shim	9.	_____		_____
16. Remove 2nd stage shroud assy (25) Install 2nd stage shroud assy 2nd St. Shroud Bolt Torque (Use Loctite)	10.	_____		_____
17. Measure 2nd stage impeller nose seal clearance (24) Measure 2nd stage impeller nose seal clearance Seal Bolt Torque	C.	_____ _____	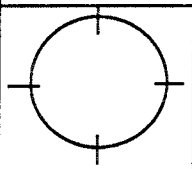	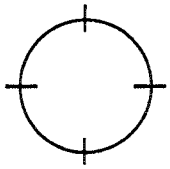
18. Remove 2nd stage impeller nose seal (23) Install 2nd stage impeller nose seal	11.			

	Ref.	Clearances		
		Nominal	Disassembly	Reassembl
19. Remove 2nd stage suction cover (22) Install 2nd stage suction cover Suction Cover Bolt Torque	12.			
20. Measure 2nd stage impeller nose runout (21) Measure 2nd stage impeller nose runout	C.			
21. Measure detail "A" clearances (20) Measure detail A clearances - note: If diffuser plate must be adjusted to obtain clearance, then 2nd stage impeller must be removed and shaft seal clearances rechecked	S. R.			
22. Remove 2nd stage impeller & shims (19) Install 2nd stage impeller (18) Install 2nd stage impeller shims	13.			
23. Measure 2nd stage shaft seal clearance (17) Measure 2nd stage shaft seal clearance Seal Bolt Torque	D.			
24. Remove 2nd stage shaft seal (16) Install 2nd stage shaft seal	14.			

	Ref.	Clearances		
		Nominal	Disassembly	Reassembl
25. Remove 2nd stage shaft impeller spacer (15) Install 2nd stage shaft impeller spacer	15.			
26. Remove 2nd stage diffuser plate 27. Remove 2nd stage shaft impeller spacer shim (14) Install 2nd stage diffuser plate (13) Install 2nd stage spacer shim	16.			
28. Remove 3rd stage vane operator assembly (12) Install 3rd stage vane operator assembly	17.			
29. Remove 3rd stage shroud & vane assembly (11) Install 3rd stage shroud & vane assembly 3rd St. Shroud Bolt Torque	18.			
30. Measure 3rd stage impeller nose seal clearance (10) Measure 3rd stage impeller nose seal clearance Seal Bolt Torque	E.			
31. Remove 3rd stage impeller nose seal (9) Install 3rd stage impeller nose seal	19.			

	Ref.	Clearances		
		Nomional	Disassembly	Reassembl
32. Remove 3rd stage suction cover casing (8) Install 3rd stage suction cover casing Suction Cover Bolt Torque	20.			
33. Measure 3rd stage impeller nose runout (7) Measure 3rd stage impeller nose runout	E.			
34. Measure detail "A" clearances (6) Measure detail "A" clearances	S. R.			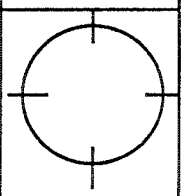
Measure bearing to shaft clearance				
35. Remove 3rd stage impeller & shims (5) Install 3rd stage impeller (4) Install 3rd stage impeller shims	21.			
36. Measure bearing oil seal clearance (3) Measure bearing oil seal clearance Oil Seal Bolt Torque	F.		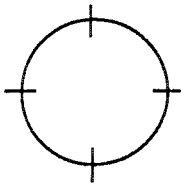	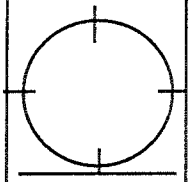
37. Remove bearing oil seal & gasket (2) Install bearing oil seal & gasket	22.			

	Ref.	Clearances		
		Nominal	Disassembly	Reassembl
38. Remove bearing oil seal mounting plate & gasket	23.			
(1) Install bearing oil seal mounting plate & gasket Seal Mounting Bolt Torque		———		———

COMPRESSOR/COMPONENT WEIGHTS

Revision Date 03/21/01

Unit Type	Unit/ Comp Size **60HZ**	Unit/ Comp Size **50HZ**	Econo Mizer (Std. Less free cooling)	Suction Elbow	1st Stage Inlet Vane	1st Stage Suction Cover	Impellers All Stages	2nd Stage Alum. Vane Plate	2nd Stage Casing	3rd Stage Alum. Vane Plate	2nd or 3rd Stage Inlet Vanes & Plate	3rd Stage Casing	Steel Volute Diffuser Plate	Discharge Volute	Complete Compressor Including Motor
CVHE	016-020	016-020	300 lbs.	203 lbs.	200 lbs.	715 lbs.	37 lbs.	90 lbs.	820 lbs.	90 lbs.	70 lbs.	768 lbs.	162 lbs.	800 lbs.	5665 lbs.
CVHE	023-032 230-320	023-032 190-270	385 lbs.	266 lbs.	240 lbs.	1008 lbs.	42 lbs.	115 lbs.	719 lbs.	115 lbs.	76 lbs.	742 lbs.	162 lbs.	793 lbs.	6880 lbs.
CVHE	036-050 360-500	036-050 300-420	700 lbs.	310 lbs.	270 lbs.	1050 lbs.	42 lbs.	130 lbs.	875 lbs.	130 lbs.	82 lbs.	775 lbs.	162 lbs.	910 lbs.	7300 lbs.
CVHE	056-080 560-800	056-080 470-660	840 lbs.	494 lbs.	300 lbs.	1145 lbs.	47 lbs.	140 lbs.	1132 lbs.	140 lbs.	88 lbs.	880 lbs.	232 lbs.	1110 lbs.	9175 lbs.
CVHE	089-125 890-1250	089-125 740-1040	1280 lbs	706 lbs.	350 lbs.	1285 lbs.	47 lbs.	150 lbs.	1257 lbs.	150 lbs.	93 lbs.	1200 lbs.	346 lbs.	1608 lbs.	11125 lbs.
CVHG	N/A	480-565	930 lbs.	494 lbs.	311 lbs.	1740 lbs.	64 lbs.	190 lbs.	1840 lbs.	190 lbs.	82 lbs.	1840 lbs.	356 lbs.	1418 lbs.	9360 lbs.
CVHG	N/A	670-780	1365 lbs.	688 lbs.	408 lbs.	1690 lbs.	68 lbs.	190 lbs.	1990 lbs.	190 lbs.	88 lbs.	1920 lbs.	309 lbs.	1430 lbs.	10360 lbs.
CVHG	N/A	920-1067	1365 lbs.	688 lbs.	425 lbs.	1718 lbs.	72 lbs.	190 lbs.	2010 lbs.	190 lbs.	93 lbs.	1920 lbs.	309 lbs.	1820 lbs.	11160 lbs.
CVHF	350-485	N/A	700 lbs.	494 lbs.	295 lbs.	1400 lbs.	64 lbs.	190 lbs.	1400 lbs.	N/A	82 lbs.	N/A	289 lbs.	1336 lbs.	7610 lbs.
CVHF	555-640	N/A	700 lbs.	494 lbs.	311 lbs.	1740 lbs.	64 lbs.	190 lbs.	1840 lbs.	N/A	88 lbs.	N/A	356 lbs.	1418 lbs.	8230 lbs.
CVHF	650-910	N/A	836 lbs.	688 lbs.	408 lbs.	1690 lbs.	70 lbs.	190 lbs.	1990 lbs.	N/A	88 lbs.	N/A	309 lbs.	1430 lbs.	9200 lbs.
CVHF	1060-1280	N/A	836 lbs.	688 lbs.	425 lbs.	1718 lbs.	70 lbs.	190 lbs.	2010 lbs.	N/A	93 lbs.	N/A	309 lbs.	1820 lbs.	9800 lbs.
CVHF ext. cap.	1470-1720	N/A	836 lbs.	1000 lbs.	750 lbs.	1770 lbs.	100 lbs.	290 lbs.	2210 lbs.	N/A	300 lbs.	N/A	712 lbs.	2250 lbs.	13120 lbs.
CDHF*	1500	N/A	836 lbs.	688 lbs.	Size CVHF 770 See Compressor										
CDHF *	2000	N/A	836 lbs.	688 lbs.	See Compressor Size CVHF 910										
CDHF*	2100	N/A	836 lbs.	688 lbs.	See Compressor Size CVHF 1060										
CDHF*	2500	N/A	836 lbs.	688 lbs.	See Compressor Size CVHF 1280										
CDHG*	N/A	1250	1365 lbs.	1078 lbs.	See Compressor Size CVHG 670										
CDHG*	N/A	1750	1365 lbs.	1078 lbs.	See Compressor Size CVHG 780										
CDHG*	N/A	2150	1365 lbs.	1343 lbs.	See Compressor Size CVHG 1067										

* Duplex Units. Suction elbow weight for each compressor.

Centravac General Service Literature

Centravac General Service Literature CTVH-GCO-01-EN

CVHE/CVHG Compressor Disassembly (Including):

- Economizer Removal
- Suction Elbow Removal
- Compressor Disassembly
- Unit Mounted Starter Removal
- Motor Removal
- Discharge Volute Removal

CVHE (E-Design And Later), CVHG And CDHG Duplex Unit Compressor Sizes 013-140 and 350-1280 Ton

This section describes disassembly (including economizer, suction elbow, unit mounted starter, motor, and discharge volute removal) procedures for the model CVHE AND CVHG CenTraVac compressor assemblies. The same information applies to the compressors for the CDHG duplex units. For disassembly and re-assembly procedures for the motor, see Centravac Service Literature Section *CTVH-GMO-01*. The procedures covered in this section may be used for the CVHE (E design sequence and later) and all CVHG compressor sizes (013 through 140) and (130 through 1250) tons. For information on the CVHF compressors, see Centravac Literature Sections *CTVH-GCO-03, 04* for compressor sizes (350 through 1280) and *CTVH-GCO-05 & 06* for the extended capacity compressor sizes 1470 and 1720.

The CVHE AND CVHG compressors are similar in construction. Always check the appropriate table to obtain weights and tolerances for a particular type or size compressor.

Warning and Cautions

WARNINGs and CAUTIONs appear at appropriate sections throughout this manual. Read these carefully.

⚠ WARNING: indicates a potentially hazardous situation which, if not avoided, could result in death or serious injury.

⚠ CAUTION: indicates a potentially hazardous situation which, if not avoided, may result in minor or moderate injury.

CAUTION: may also be used to alert the reader to a situation that could result in equipment or property-only damage.

Centravac General Service Literature

Disassembly.

Refer to CenTraVac General Literature Section CTVH-GMS-01 for details on the special lifting fixtures for removing the first stage inlet vane assembly and handling the compressor suction cover and casing components. The tools shown can be fabricated locally using the drawings found in the special tools section. The Trane Company assumes no responsibility for the use of materials that do not meet the required specifications, or for improper or faulty manufacturing, assembly or use of these lifting fixtures. Never exceed the maximum safe lifting capacity of the fixture.

IMPORTANT: Some of the lifting tools built for the CVHE compressor components have a maximum lifting capacity of 1300 lb. The tool maximum weight capacity is stamped on the tool. Some CVHG castings exceed this rating and the lifting tool given in Literature Section CTVH-GMS-01 must be used.

⚠ WARNING
HEAVY OBJECTS!
Use lifting and rigging equipment that is rated to handle the maximum weights. Improper use of lifting fixtures may result in death or serious injury.

Follow all proper procedures when handling large compressor components. Use lifting and rigging equipment that is rated to handle the maximum weights of the pieces found in Table 2 in the back of this literature section. It is recommended that all lifting devices have a capacity rating no less than 100% of the weights shown. Carefully inspect lifting equipment to ensure it is in good condition and has been certified for continued use at proper intervals.

1 It may be advisable to obtain vibration readings for reference purposes prior to disassembly. See General Service Bulletin *CVHE-SB-18* (latest revision) for information on allowable vibration limits.

⚠ WARNING
HAZARDOUS VOLTAGE!
Disconnect all electrical power, including remote disconnects, before servicing. Follow proper lockout/tagout procedures to ensure the power cannot be inadvertently energized. Failure to disconnect power before servicing could result in death or serious injury.

IMPORTANT: Be sure to properly lock out ALL potentially hazardous energy sources before servicing is done on the equipment. Follow all proper refrigerant handling procedures. Before disassembly, evacuate the unit to 2.5 mm vacuum and bring the unit back up to atmospheric pressure using dry nitrogen.

2 Mark and disconnect all power leads to the inlet vane actuator motor. Remove the conduit assembly from the actuator motor.

3 Remove the inlet vane actuator linkages.

(a) Disconnect the universal joints at the inlet vane operator levers.

(b) Remove the 5/8" - 11 x 2" hex head bolts securing the vane drive support assemblies to the compressor castings. Before removing them, mark the compressor castings by scribing a line around the brackets so they may be reassembled in the same relative positions. This will help ensure that the inlet vane linkages maintain their proper coordination between the stages. See Figure 1

Figure 1

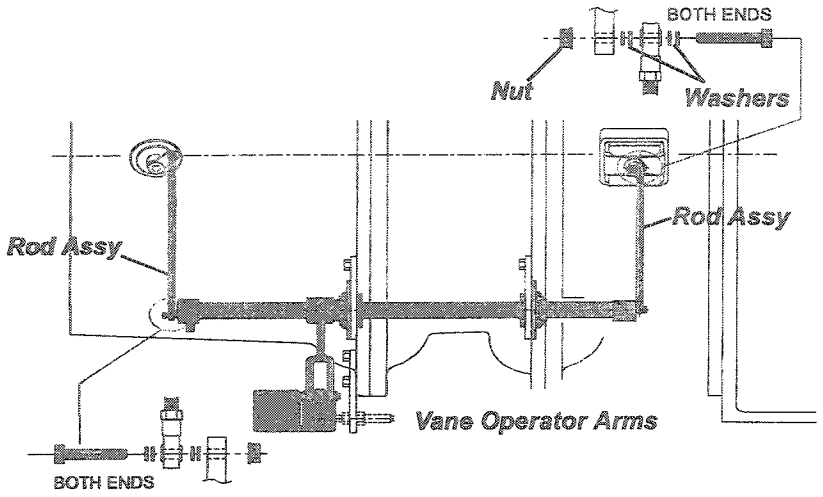

(c) Remove the cotter pin securing the vane operator stud.

(d) Slide the vane motor off the stud and remove the entire vane linkage assembly and vane motor from the unit.

(e) Remove the linkage assembly from the vane motor by removing the cotter pin or bolt and nut. The vane motor is now free and can be removed.

CAUTION

COMPONENT ALIGNMENT!

Before disassembling the compressor, scribe lines across the flanges on the exterior edges of all compressor castings in two locations, 180 degrees apart. This must be done so that all components can be re-aligned during re-assembly. Failure to complete this step may result in misalignment of the suction elbow upon re-assembly and possible distortion of the compressor. This can cause vibration problems or seal-to-impeller interference

and possible damage to the impellers and compressor.

CAUTION

COMPONENT ALIGNMENT!

The following two paragraphs provide instructions to maintain proper component alignment and fit. Make sure the compressor casings are dowelled or scribed and the discharge volute is dowelled. Failure to maintain proper alignment may result in compressor damage. Failure to maintain proper suction elbow fit up can cause vibration problems or seal-to-impeller interference and possible damage to the impellers and compressor.

4 Before proceeding further, check to make sure the discharge volute has dowel pins in the flange at the condenser and the compressor foot where it mounts on the evaporator support bracket. These pins are standard on all newer units and will be required if the discharge volute or entire compressor will be removed from the shells. The alignment of the compressor/motor assembly is determined by the position of the discharge volute. A shift in volute position at either the discharge flange or the compressor foot can change the suction elbow to compressor alignment. **Failure to maintain proper suction elbow fit up can cause vibration problems or seal-to-impeller interference and possible damage to the impellers and compressor.** Some early vintage CVHE units were built without these two dowel pins. When necessary, dowel pins should be added to the discharge flange and compressor foot. Units ordered for field disassembly (compressor removal) may have the motor, interstage casings and suction cover doweled as well as the discharge flange and foot.
For additional information on compressor doweling see General Service Bulletin CVHE-SB-10 (latest revision).

5 If the entire compressor or the volute will need to be removed from the shells, the dowel pins at the discharge flange and foot will have to be removed. First remove the threaded nut on the exposed end of the dowel pin. Then slip washers or a bushing over the pin. Reinstall the nut. As the nut is tightened, the pin will be pulled out of place. The dowel pins allow for precise assembly of the compressor components in their original position.

Note: It is not necessary to dowel all compressor casings for overhauls when properly scribed as detailed above.

IMPORTANT: Make sure the evaporator and condenser inlet and outlet water valves have been closed (no water flow!) and the evaporator and condenser water boxes have been completely drained. Failure to prevent water flow through the unit during repairs could cause severe rusting inside the shells. In humid environments it may be advisable to place a portable light or trouble light (100 -300 Watt) in the evaporator and condenser if necessary to provide enough heat to prevent moisture from condensing in the unit during repairs. In excessively humid environments, consider the use of a nitrogen purge to help prevent corrosion.

6 Remove the economizer to allow for compressor volute clearance.

(a) Some CVHE and CVHG units will require cutting the drain line that returns motor cooling liquid to the economizer. Sand the line to remove paint then cut with a tubing cutter. Do not use a hacksaw to cut the line. *Always use a tubing cutter to avoid introducing copper chips (debris) into the unit.*

(b) On smaller units, a floor jack may be placed under the economizer sump.

(c) For larger units it may be advisable to block the economizer and piping when the bolts are removed and then use slings (in the choke configuration) at each end to lift the economizer. See Table 2 for weights of economizers. Make sure the proper balance point of the economizer is found, to prevent it from rotating as it is lifted. See Figure 2 for proper sling use.

Note: The lifting capacity of a sling is reduced when the load angle is less than 90°. See Table 1 for load factor values. For angles less than 90°, multiply the load factor by the nominal sling lifting capacity to determine the allowed lift weight.

Figure 2
Typical Choke Sling Cable Arrangement

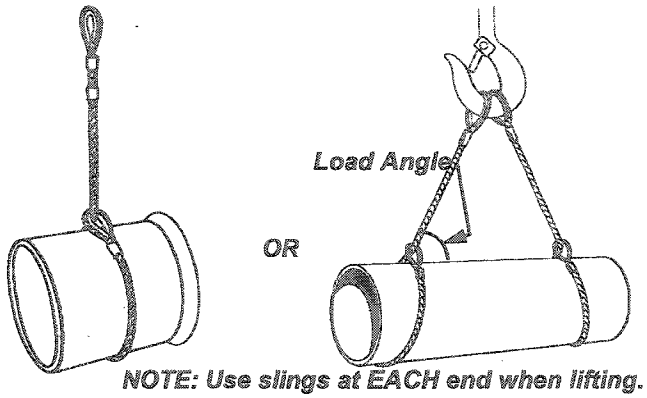

Table 1

Load Angle (°)	Factor	Load Angle (°)	Factor
90	1.000	50	0.7660
85	0.9962	45	0.7071
80	0.9848	40	0.6428
75	0.9659	35	0.5736
70	0.9397	30	0.5000
65	0.9063	25	0.4226
60	0.8660	20	0.3420
55	0.8192	15	0.2589

(d) Carefully slide the economizer away from the shells.

(e) Lightly oil all flanges with compressor oil. Cover all openings with plastic and seal with duct tape to prevent debris from entering the economizer.

(f) Remove the orifice assemblies and mark them properly. Oil the flanges on the condenser liquid line and the evaporator liquid inlet to prevent rusting. Cover the openings with plastic and duct tape to prevent entry of debris.

7 Remove the Suction Elbow.

(a) Remove the bolts from the suction elbow flanges at the evaporator and compressor.

(b) Place a sling in the choke configuration around the suction elbow. Position the sling so the elbow balances properly as it is lifted. *Do NOT use the weld nut on the suction elbow for lifting.* See Table 2 for the weight of the suction elbow.

(c) Clean and lightly oil the suction elbow flanges to prevent rusting and place the elbow on wooden blocks to protect the face of flange. Remove the o-ring, then thoroughly clean the groove in the flange on the evaporator. Lightly oil the flange on the evaporator. Cover the opening with plywood to protect the flange and prevent debris from entering the evaporator during repairs.

IMPORTANT: Mark all components before removing them. Mark the face of components with a description or location (e.g. 1st stage impeller seal) and the top (12 o'clock) mounting position of all seals, impellers, spacers, casings, plates etc. so they may be re-installed in the same position. This will be important in maintaining the proper balance and alignment of the rotating components during re-assembly.

8 Remove the first stage inlet vane assembly.

(a) Loosen and remove the 5/16" - 18 x 1" hex head bolts and lockwashers securing the first stage vane operator assembly to the suction cover. See Figure 3. Mark the operator lever and the suction cover casing with the vanes in the closed position. Remove the vane operator assembly.

Figure 3

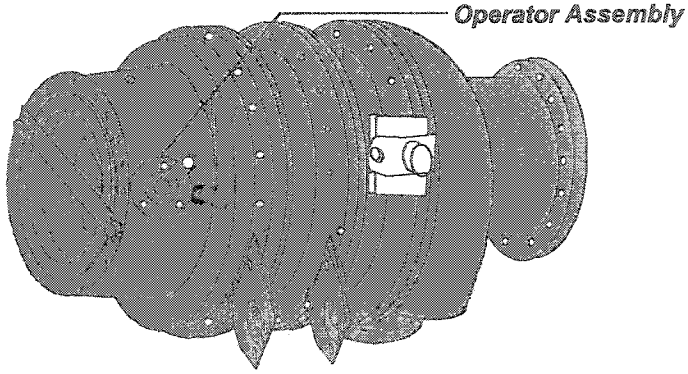

(b) Use a length of L-channel extending across the width of the inlet vanes and two bolts with washers in the suction cover flange to hold the inlet vane assembly in the cover.

Remove the three 5/16" - 18 x 3/8" countersunk set screws in the suction cover holding the inlet vane assembly in place. See Figure 3.

Figure 4

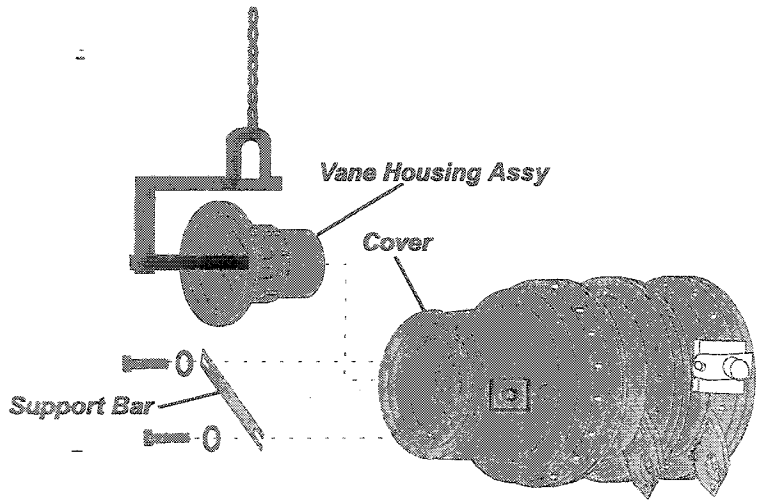

(c) Using the vane lifting tool shown in Figure 4, lift up slightly on the vane assembly. Remove the L-channel holding it in place and pull the vane assembly away from the suction cover. The weight of the vane assembly is given in Table 2.

IMPORTANT: Immediately spray a rust-preventive penetrating oil into the needle bearings in the inlet vane housing, while manually opening and closing the vanes. Thoroughly oil the bearings to minimize the risk of rust forming in the bearings, which could lead to vane binding. Anytime a unit will be open for major repairs, it is recommended the needle bearings in the vane assembly be replaced.

9 When applicable, sand the paint from the oil sump vent line to the suction cover and cut the pipe using a tubing cutter. Do not use a hacksaw to cut the line. Always use a tubing cutter to avoid introducing copper chips (debris) into the unit.

10 Remove the 1/4" oil drain line at the bottom of the suction cover.

11 Measure and record the clearance between the 1st stage seal impeller labyrinth and impeller nose using a feeler gauge. If so equipped, bend the tabwasher tab back allowing the hex head bolts that secure the seal to be removed. The tabwashers are no longer used in production and should be replaced by ramp washers during re-assembly. Remove the seal and store properly along with the retaining bolts. See Figure 5.

Figure 5

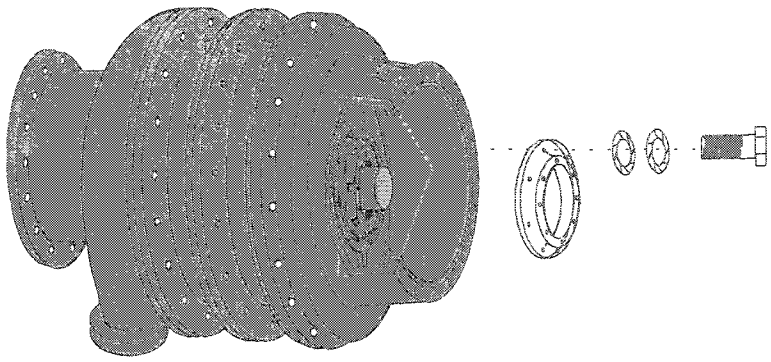

IMPORTANT: Mark this seal carefully. On some size units this seal is mounted in a reverse position. Installing it incorrectly could result in improper venting of the suction cover and may lead to oil loss. Do not mix the bolts with those of other seals, as the bolt lengths may vary.

12 Remove the suction cover and suction cover o-ring.

(a) Remove two of the 5/8" bolts from the suction cover, 180 degrees apart on the horizontal centerline (3 and 9 o'clock position) and insert 6" long guide pins.

(b) Attach a casting lifting fixture to the face of the suction cover flange.

(c) Remove a bolt near the bottom of the suction cover and one to the side of the lifting fixture and insert 6" long 5/8" stop bolts with heads to limit movement of the cover until a proper balance point is obtained. Attach an overhead hoist of sufficient lifting capacity to the lifting plate. See Table 2 for the weight of the suction cover. Remove the remaining bolts (leaving in place the 6" long guide pins and 6" long stop bolts) and pick up slightly on cover. It may be necessary to use jacking bolts to push the cover away from the casing. If necessary, move the pick-up point on the lifting tool until the cover is balanced. Once the cover is balanced properly with the lifting tool, remove the stop bolts at the top and bottom of the cover and remove the suction cover. Oil the cover flanges lightly and store it properly to prevent rust or damage to the sealing surfaces. See Figure 6. Remove the guide pins.

Figure 6

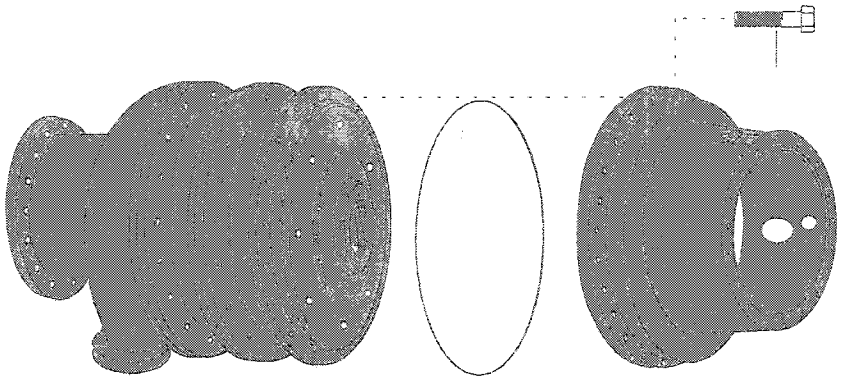

13 Measure and record the total indicated runout (TIR) on the nose of the 1st stage impeller. Use a dial indicator with a magnetic base for measuring runout. See Figure 7.

Figure 7

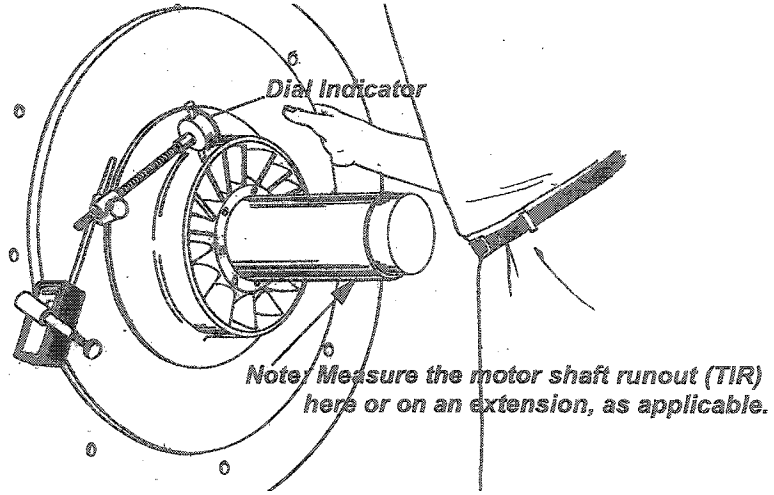

14 Measure and record the total indicated runout (TIR) at the end of the shaft. Some motor sizes have an extension on the end of the shaft where the runout can be measured without having to remove the impeller locknut. Many motors will require removal of the locknut and 1st stage impeller to provide a surface for measuring runout. The allowable TIR is .0012". See note in Figure 7.

15 If it is anticipated that the present compressor seals along with other components will be used during re-assembly, it is advisable to record clearances and runout measurements. The form at the back of this section can be used to record the tolerances. The recommended tolerances can be found in Table 3.

16 Remove the impeller locknut.

Note: Some units are equipped with a standard locknut, while some units have a balance style locknut. The balance style locknut has small tapped holes in the face for the purpose of installing balancing screws and weights.

IMPORTANT: When the unit has a balance style locknut with weights attached, and the motor and all rotating compressor components will be re-used, it is necessary to mark all rotating components such as the locknut, spacers, impellers and motor shaft. This is required to ensure the components can be re-assembled in the exact position as they were removed. Failure to mark all components and reassemble properly could lead to an out of balance condition and require the assembly to be trim balanced. If the motor/rotor or other rotating components located on the shaft will be replaced, it is not necessary to mark all components. Whenever replacing individual rotating components with new ones, the balance weights from the locknut should be removed.

All major rotating components are individually balanced to specification before the compressor is assembled. Even though each major rotating component in the compressor is individually balanced, a small percentage of the compressors assembled in the factory and in the field may be beyond the allowable limit for unbalance. When this occurs, the compressor will need to be trim balanced in the field after re-assembly, using a balance style locknut and weights. Refer to Service Bulletin *CVHE-SB-18* (latest revision) for information on allowable vibration limits.

IMPORTANT: When all components will be re-used during re-assembly, mark the position of the locknut relative to the end of the motor shaft. It is best to mark these at the location of the keyway for the 1st stage impeller. A small center punch can be used to place a mark on the locknut and the end of the shaft. ***Do not remove the balance screws or weights from the balance locknut when all components will be re-used!***

(a) Bend the lockwasher tab back from the slot on the impeller locknut.

(b) Remove the impeller locknut, lockwasher, spring washer, and steel spacer as applicable. Use a spanner wrench to remove the locknut. See Figure 8. The locknut has right hand threads. To loosen impeller locknut, turn it counter clockwise. Use a wire cable tie or tape to keep the items together. Tape the end of the shaft to prevent damage to the threads. Note: It is recommended that the lockwasher be discarded and replaced with a new lockwasher during re-assembly.

Figure 8

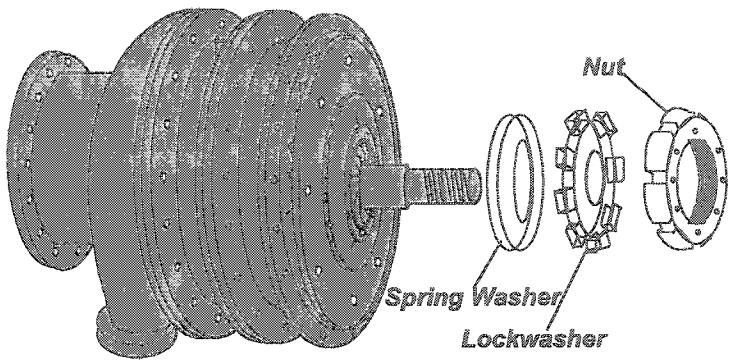

CAUTION

POSSIBLE COMPRESSOR FAILURE!

Use undamaged or new lockwashers for re-assembly. Once a locking tab has been bent over on a lockwasher it may become weak and break off if re-used. This could cause the impeller locknut to loosen and come off during operation, causing major damage to the compressor and motor.

(c) Note: Discard old or damaged lockwashers. Save the conical spring washer for re-use.

Figure 9

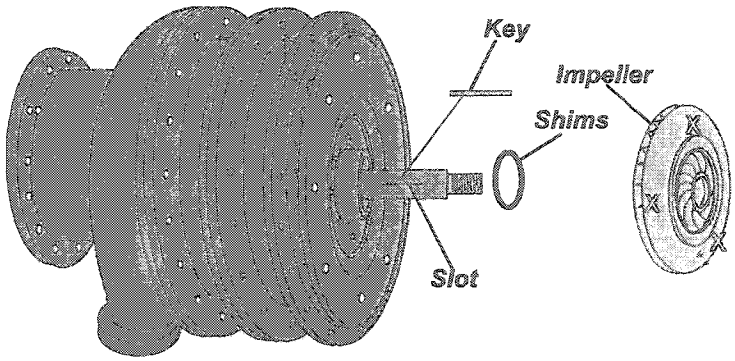

17 Remove the impeller. (See Figure 9.)

(a) Before removing the impeller, check the alignment of the impeller inside back discharge surface to the diffuser plate. The impeller surface should be aligned as shown in Figure 10. When reusing all rotating components and the alignment is not as specified above, measure and record the amount of shim(s) that may need to be added or removed during re-assembly.

Figure 10

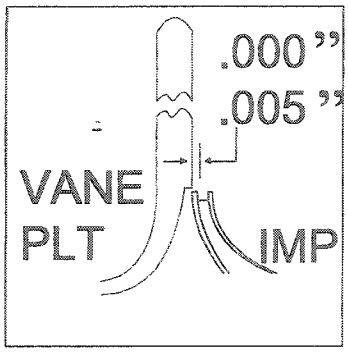

(b) It may be necessary to use a puller to remove the impeller. When using a puller, make sure the face of the puller is parallel to the face of the impeller hub to ensure a straight pull. Take care not to damage the machining center in the end of the shaft. If necessary, a small amount of heat may be required to loosen the impeller on the shaft. When heating impeller, use a large (Rosebud) tip with a soft gentle flame. Do not overheat the impeller. The impeller should be heated so that it is warm to the touch. Do not exceed 120° F.

(c) Mark the impeller 1st STAGE.

18 Remove the impeller key and shims from behind the impeller. Tape the shims together and secure them to the impeller along with the key. Keep the parts for each stage separate.

19 Measure and record the clearance between the 1st stage shaft seal and spacer. If the shaft seal has the lockwashers with bent over tab, bend them over using a screw driver. It is recommended the tab type lock washers be discarded and replaced by the ramp type washers shown in Figure 11. Remove the hex head bolts and ramp washers and remove the seal and mark it properly.

20 Remove the 1st stage spacer and spacer tube (some CVHG compressors).

Figure 11

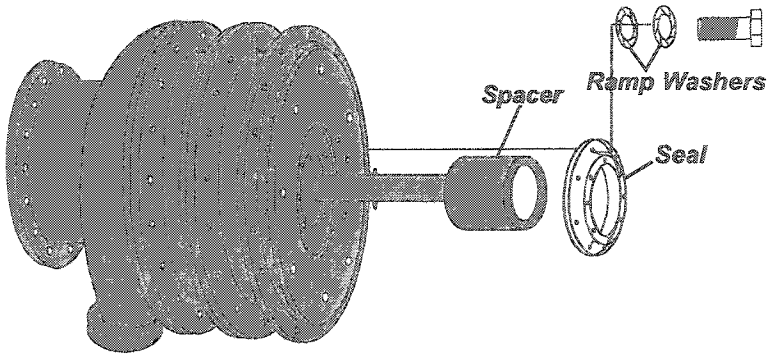

(a) Mark the spacer and spacer tube with its position on the shaft with the first stage impeller keyway at the 12 o'clock position. The shaft spacer has tapped pull-off holes that can be used to pull the spacer if needed. Using the pull-off holes may be required on units where corrosion has occurred due to leaks and moisture or other causes.

(b) Mark the spacer and spacer tube for TOP and 1st STAGE.

21 Remove the 1st stage vane plate. See Figure 12. Refer to Table 2 for the weight of the vane plate.

Figure 12

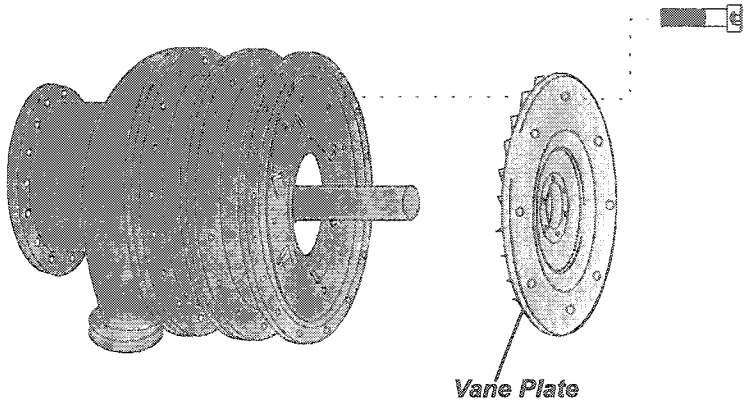

(a) Remove four 3/8"- 16 socket head cap screws.

(b) Mark the vane plate for TOP and 1st STAGE.

(c) Install two 3/8"- 16 x 6" stop bolts with heads in two of the bolt holes. Install two 3/8"- 16 x 6" guide pins (may be threaded rod, no heads) in the remaining two bolt holes.

(d) Remove the remaining socket head screws holding the vane plate to the interstage casing.

(e) Back the vane plate away from the interstage casing on the guide and stop bolts as far as the bolt heads will allow (approximately 6").

(f) Place a nylon sling through the center of the vane plate in the choke configuration.

(g) Lift the plate slightly with the nylon sling and remove the two remaining stop bolts with heads.

(h) Remove the vane plate, being careful not to damage the rotor shaft.

22 Remove the 2nd stage steel shroud assembly. See Figure 13.

(a) Leave the guide pins in place as installed in Step 21 above.

(b) Mark the TOP of the shroud assembly.

(c) Remove the 1/4"-20 x 3/4" flathead screws that secure the shroud assembly. These screws use a a thread locking compound and may be difficult to remove. Use an allen

head socket for removal. Make sure the allen head socket does not have rounded edges. A hand impact driver may be helpful in removing screws. See Figure 13.

Figure 13

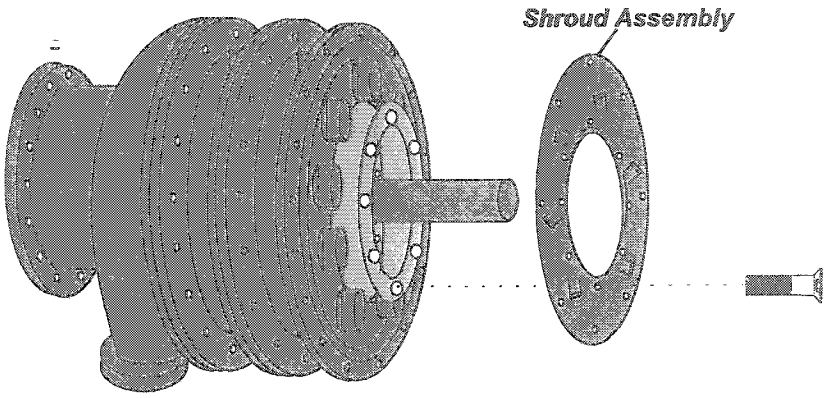

(d) Slide the vane shroud assembly out on the guide pins and attach a lifting sling.

(e) Remove the shroud, guiding it clear with the guide pins. Lightly coat the shroud with compressor oil and store properly.

23 Remove the shims from in front of the 2nd stage impeller. Tape them together and secure them to the back of the spacer removed in Step 20.

24 Remove the 2nd stage impeller nose seal. Refer to Figure 14.

Figure 14

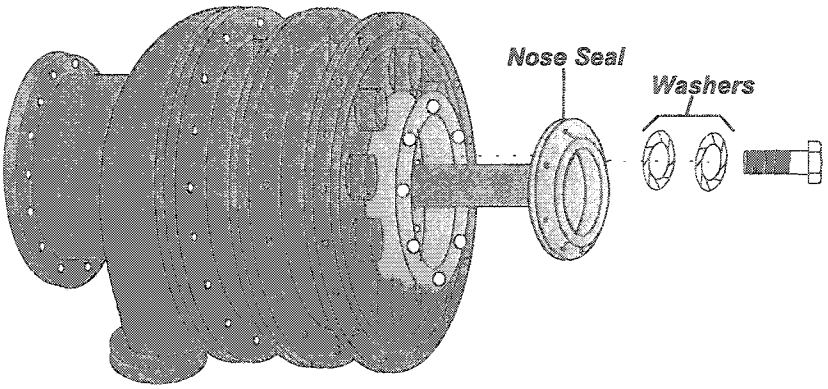

(a) Measure and record the seal clearance. Table 3 provides proper clearances.

(b) Mark the seal for TOP and 2nd STAGE. *IMPORTANT: Mark this seal carefully. On some size units this seal is mounted in a reverse position.*

(c) Remove the 3/8" - 16 x 1" hex head screws and tab or ramp washers.

(d) Remove the seal. See Figure 14.

25 Measure and record the total indicated runout (TIR) on the nose of the 2nd stage impeller.

26 Remove the 2nd stage suction cover and o-ring. See Table 2 for the weight of the intermediate stage suction cover.

(a) Remove two bolts from the suction cover, 180 degrees apart on the horizontal centerline (3 and 9 o'clock positions) and insert 6" long guide pins.

(b) Remove a bolt near the bottom of the suction cover and one to the side of the lifting fixture and insert 6" long stop bolts (with heads) to limit movement of the cover until a proper balance point with the lifting fixture is obtained. Attach the lifting plate. Remove the remaining bolts (leaving in place the guide pins and stop bolts) and pick up slightly on the cover. It may be necessary to use jacking bolts to push the cover away from the casing. If necessary, move the pick up point on the lifting tool until the cover is balanced.

(c) Once the cover is balanced properly with the lifting tool, remove the stop bolts at the top and bottom of the cover and remove the suction cover. Lightly oil the cover flanges and store it properly to prevent rust or damage to the flange sealing surfaces. See Figure 15.

Figure 15

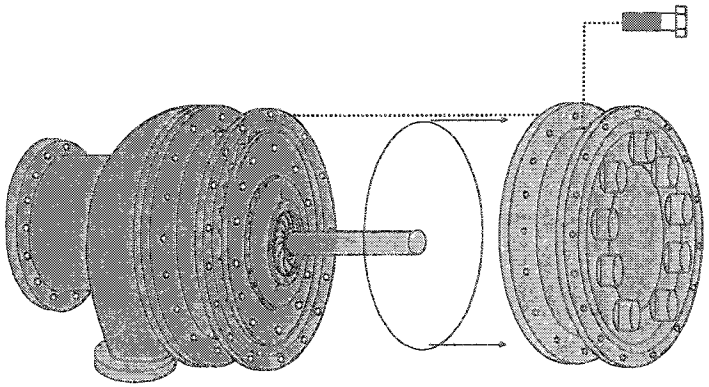

27 Remove the 2nd stage impeller.

(a) Before removing the impeller, check the alignment of the impeller inside the back discharge surface to the diffuser plate. The impeller surface should be aligned as shown in Figure 16. When re-using all rotating components and the alignment is not as specified above, measure and record the amount of shims that may need to be added or removed during re-assembly.

Figure 16

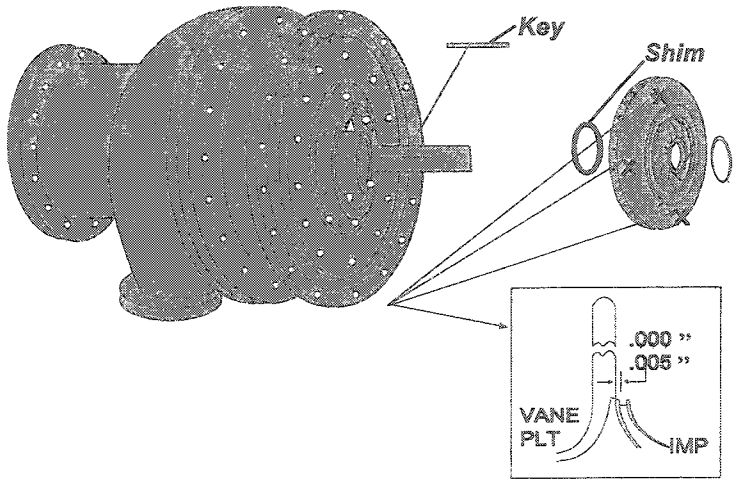

(b) It may be necessary to use a puller to remove the impeller. When using a puller, make sure the face of the puller is parallel to the face of the impeller hub to ensure a straight pull. Take care not to damage the machining center in the end of the shaft. If necessary, a small amount of heat may be required to loosen the impeller on the shaft. When heating impeller, use a large (Rosebud) tip with a soft gentle flame. Do not overheat the impeller. The impeller should be heated so that it is warm to the touch. Do not exceed 120° F.

(c) Mark the impeller 2nd STAGE.

28 Remove the impeller key and shims from behind the impeller. Tape the shims together and secure them to the impeller along with the key. Keep the parts for each stage together. See Figure 16.

29 Mark and remove the 2nd stage shaft seal.

(a) Measure and record the seal clearance. Proper clearances are given in Table 3.

(b) Mark the seal for TOP and second stage.

(c) Remove the 3/8" - 16 x 1" bolts and tab or ramp washers that secure the seal to the vane plate.

(d) Remove the seal. See Figure 17.

Figure 17

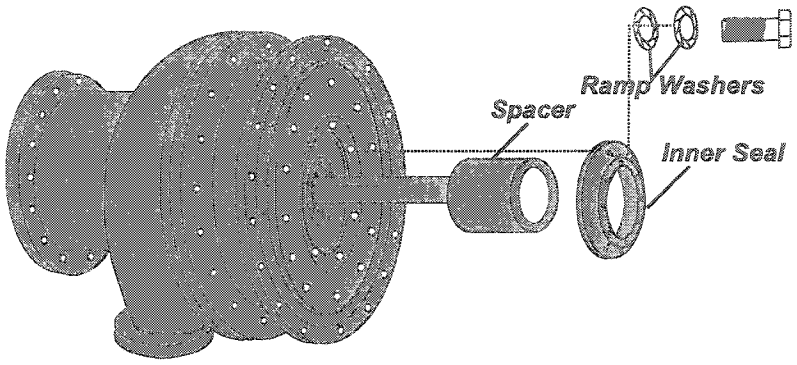

30 Remove the 2nd stage shaft spacer.

(a) Mark spacer position on the shaft with the 1st stage impeller keyway at the 12 o'clock position.

(b) Mark the seal for TOP and 2nd STAGE.

31 Remove the aluminum vane plate. See Figure 18. Refer to Table 2 for the weight of the vane plate.

Figure 18

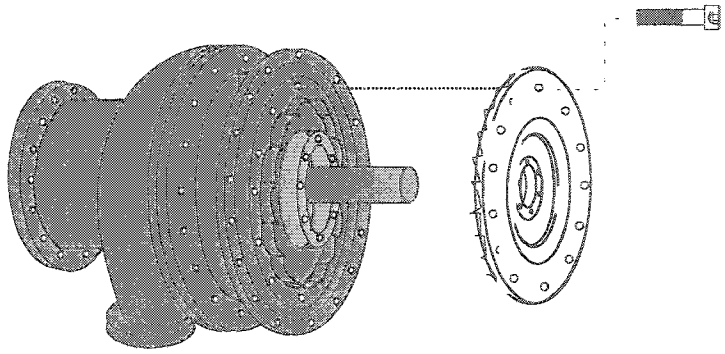

(a) Remove four 3/8"-16 socket head screws.

(b) Mark the vane plate for TOP and 2nd STAGE.

(c) Install two 3/8"-16 x 6" stop bolts with heads in two of the bolt holes. See Figure 12. Install two 3/8"-16 x 6" guide pins (can be threaded rod, no heads) in the remaining two bolt holes.

(d) Remove the remaining socket head screws holding the vane plate to the interstage casing.

(e) Back the vane plate away from the interstage casing on the bolts as far as the bolt heads will allow.

(f) Place a nylon sling through the center of the vane plate in the choke configuration.

(g) Lift the plate slightly with the nylon sling until the two stop bolts (with heads) can be removed.

(h) Remove the vane plate, being careful not to damage the rotor shaft.

32 Remove the 3rd stage vane operator assembly. See Figure 19.

Figure 19

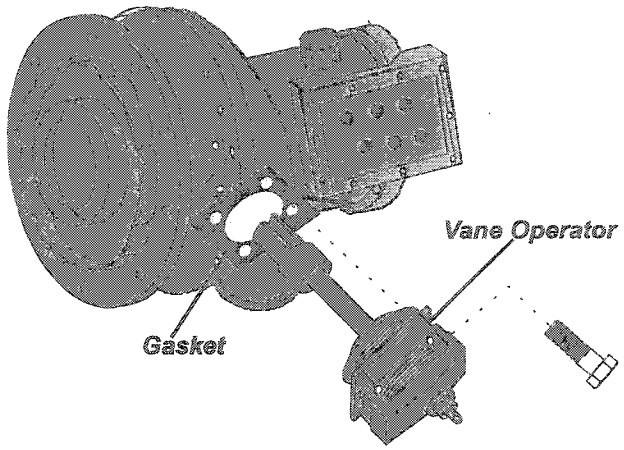

(a) Remove the 1/2" - 13 x 1-3/4" hex head screws that secure the vane operator assembly.

(b) Remove the vane operator and gasket. Lightly coat all bare metal surfaces with compressor oil.

33 Remove the shroud and 3rd stage inlet vane assembly.

(a) Mark the assembly for TOP.

(b) Leave the guide pins installed in Step 32 in place. See Figure 20.

(c) Remove the 1/4" - 20 x 3/4" flathead screws that secure the shroud. These screws use a thread locking compound and may be difficult to remove. Use an allen head socket for removal. Make sure the allen head socket does not have rounded edges. A hand impact driver may be helpful in removing screws.

(d) Attach a sling or cable to the shroud and remove the shroud and vane assembly. See Figure 20. For weights, see Table 2. Immediately coat the vane assembly shroud, pins, levers etc. with compressor oil or rust preventive oil to stop corrosion or rust.

Figure 20

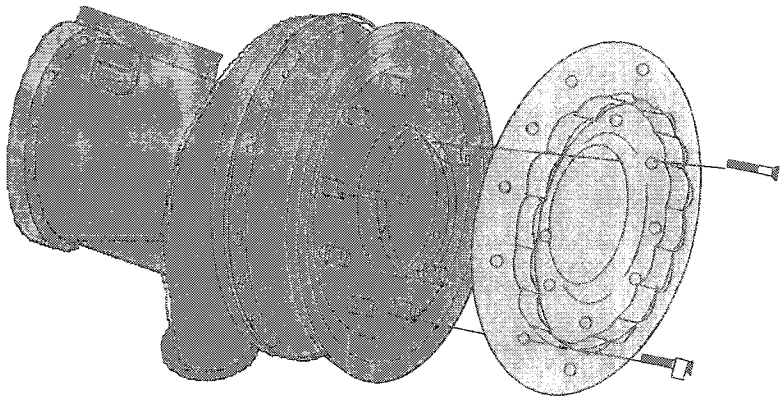

34 Remove the 3rd stage impeller nose seal. Refer to Figure 21.

(a) Measure and record the seal clearance. Table 3 provides proper clearances.

(b) Mark the seal for TOP and 3rd STAGE.

(c) Remove the 3/8" - 16 x 1" hex head screws and tab or ramp washers.

(d) Remove the seal.

Figure 21

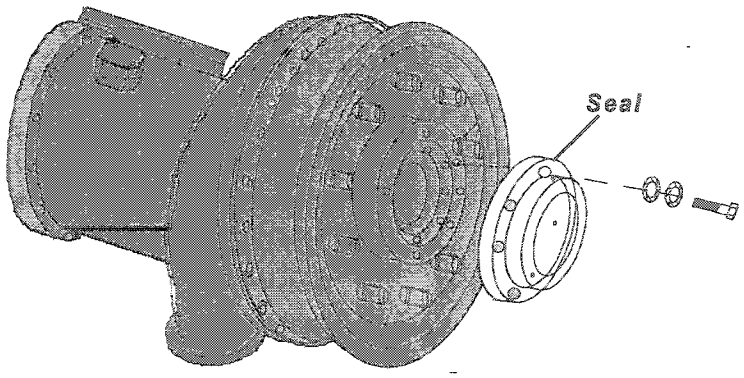

35 Measure and record the total indicated runout (TIR) on the nose of the 3rd stage impeller.

36 Remove the 3rd stage suction cover and o-ring. See Table 2 for the weight of the intermediate stage suction cover.

(a) Remove two bolts from the suction cover, 180 degrees apart on the horizontal centerline (3 and 9 o'clock positions) and insert 6" long guide pins.

(b) Remove a bolt near the bottom of the suction cover and one to the side of the lifting fixture and insert 6" long stop bolts (with heads) to limit movement of the cover until a proper balance point with the lifting fixture is obtained. Attach the lifting plate. Remove the remaining bolts (leaving in place the guide pins and stop bolts) and pick up slightly on the cover. It may be necessary to use jacking bolts to push the cover away from the casing. If necessary, move the pick-up point on the lifting tool until the cover is balanced.

(c) Once the cover is balanced properly with the lifting tool, remove the stop bolts at the top and bottom of the cover and remove the suction cover. Lightly oil the cover flanges and store it properly to prevent rust or damage to the flange sealing surfaces. See Figure 22.

37 Remove the 3rd stage impeller and the shim(s) in front of impeller. Tape the shims to the spacer removed earlier.

Figure 22

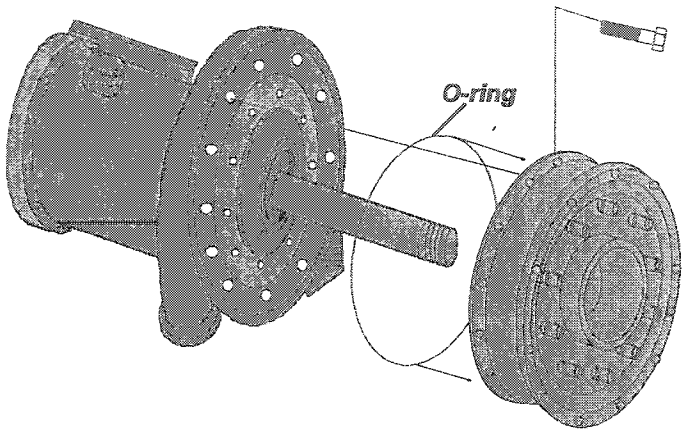

(a) Before removing the impeller, check the alignment of the impeller inside the back discharge surface to the diffuser plate. The impeller surface should be aligned as shown in Figure 23. When re-using all rotating components and the alignment is not as specified, measure and record the amount of shims that may need to be added or removed during re-assembly.

(b) A puller may be necessary to remove the impeller. When using a puller, make sure the face of the puller is parallel to the face of the impeller hub to ensure a straight pull. Take care not to damage the machining center in the end of the shaft. If necessary, a small amount of heat may be required to loosen the impeller on the shaft. When applying heat, use a torch with a large (Rosebud) tip and a soft gentle flame. Do not overheat the impeller. The impeller should be heated so that it is warm to the touch. Do not exceed 120° F. See Figure 23.

Figure 23

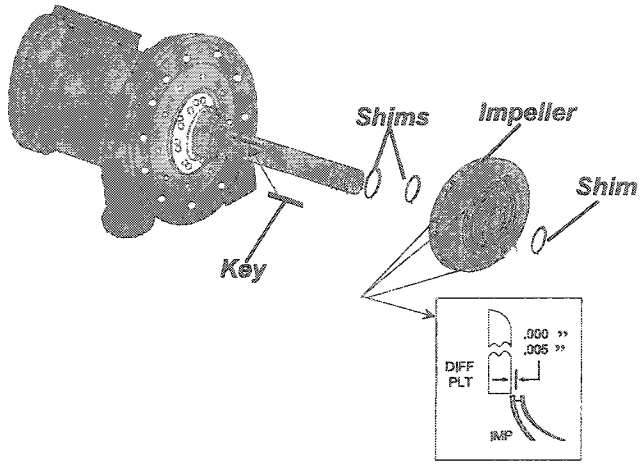

(c) Mark the impeller 3rd STAGE.

38 Remove the impeller key and shims from behind the impeller. Tape the shims together and secure them to the impeller along with the key. *Note: It is important that the thicker steel spacer be installed against the shaft shoulder with the chamfer facing the shaft shoulder.*

39 Remove the bearing oil seal and gasket.

(a) Measure and record the seal clearance. *IMPORTANT: Excessive clearance of this seal will cause oil loss.* Measure the seal clearance all the way around as shown. The total clearance between the shaft OD and seal ID will be 0.0040" to 0.0070". This seal is set in the factory with the bottom of the seal brought up to the bottom of the shaft and all the clearance (.004"-.007" total) at the top. The clearance between shaft and seal at the sides (3 and 9 o'clock positions) should be equal. See Figure 24.

Figure 24

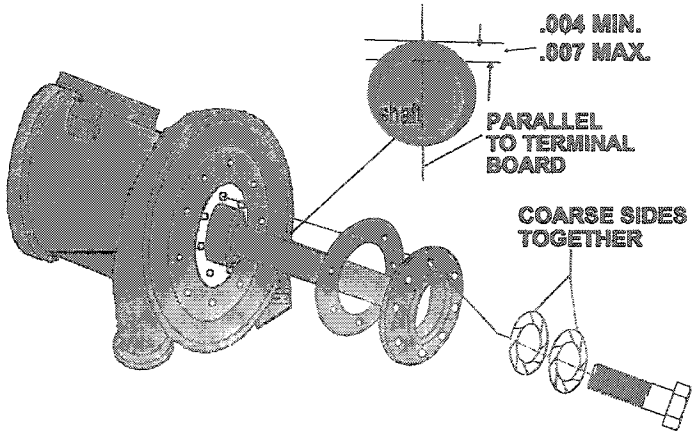

(b) Mark the seal for TOP. *IMPORTANT: The seal has a small oil drain hole in the back which must be correctly aligned during re-assembly. The drain hole must be at the 6 o'clock position.*

(c) Remove the hex head screws and tab or ramp washers securing the seal and gasket.

40 Remove the bearing oil seal mounting plate and gasket.

(a) Mark the plate for TOP.

(b) Remove two 3/8" - 16 x 1" socket head screws and insert two stop bolts approximately 6" in length and two 6" long guide pins.

(c) Remove the remaining screws and then remove the plate and gasket. See Figure 25. Use a nylon sling or rope to lift the plate. See Table 2 for the weight of the plate. Place a container under the plate since some oil will drain out when the plate is removed. Lightly coat the plate with compressor oil to prevent rust.

Figure 25

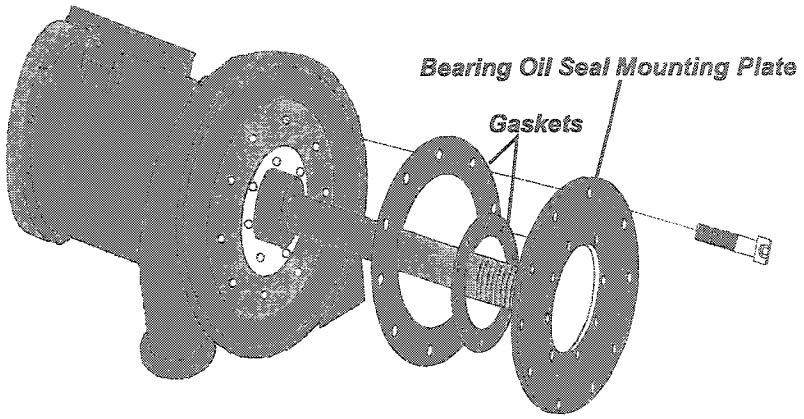

41 Unit mounted starter removal (when applicable).

(a) Attach a small chain to the lifting eye bolts on top of the starter. Pick up slightly on the chain to take up slack.

(b) Remove the motor leads from the motor terminal studs. Mark each lead carefully with the corresponding motor terminal number stamped on the motor terminal board. Remove other electrical connections as necessary to allow enough room to remove the starter and mark them carefully.

(c) Remove the bolts holding the starter to the motor housing and the bolts (when applicable) on the lower support bracket and move the starter away from the motor, being careful not to damage the motor terminals.

42 Motor removal.

(a) Sand the external oil supply and drain lines to remove paint, then cut them with a tubing cutter. Do not use a hacksaw to cut the lines. Always use a tubing cutter to avoid introducing copper chips (debris) into the unit.

(b) Heat the internal oil supply line to loosen and remove line. Bleed nitrogen through the line when heating to prevent build up of copper oxides inside the line. Use a wet rag to protect the threaded connections from excessive heat. See Figure 26.

Figure 26

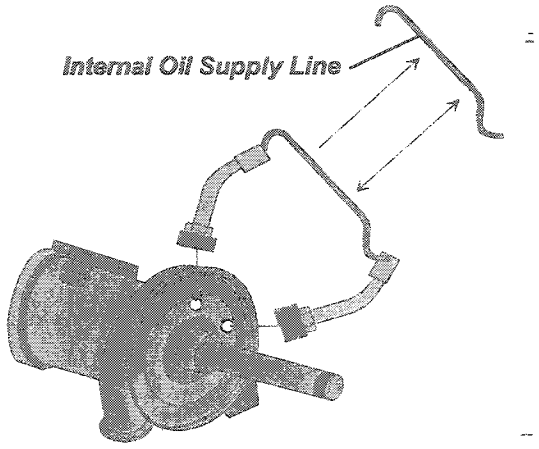

(c) If the motor is to be replaced or remanufactured, remove the bearing oil supply orifice on the thrust (ball) bearing end of the motor. The orifice threads into the motor bearing housing.

IMPORTANT: Save the orifice for re-use.

IMPORTANT: Failure to use a properly sized orifice on the ball bearing supply line could result in excessive oil flow and possible oil loss problems.

(d) Remove the flange bolts for the motor cooling refrigerant supply line and drain lines. In some instances, the drain lines may need to be cut to provide enough clearance for motor removal. Sand the drain line to remove paint then cut it with a tubing cutter. Do not use a hacksaw to cut the line. Always use a tubing cutter to avoid introducing copper chips (debris) into the unit.

IMPORTANT: Remove the motor cooling orifice located between the motor housing and the motor cooling supply line flange. Save the orifice for re-use.

(e) Using two slings in the choke configuration, position them at each end of the motor housing. Refer to Table 4 for motor weights.

(f) Remove two of the bolts holding the motor assembly in the volute and install 5/8" guide pins (2-3" in length) so they are 180 degrees across from each other.

Note: On some units with large frame motors (>5000 frame), the bolts securing the motor to the discharge volute must be accessed from the compressor side. See Figure 27. This will require removing the volute diffuser plate as detailed in step 43.

Figure 27

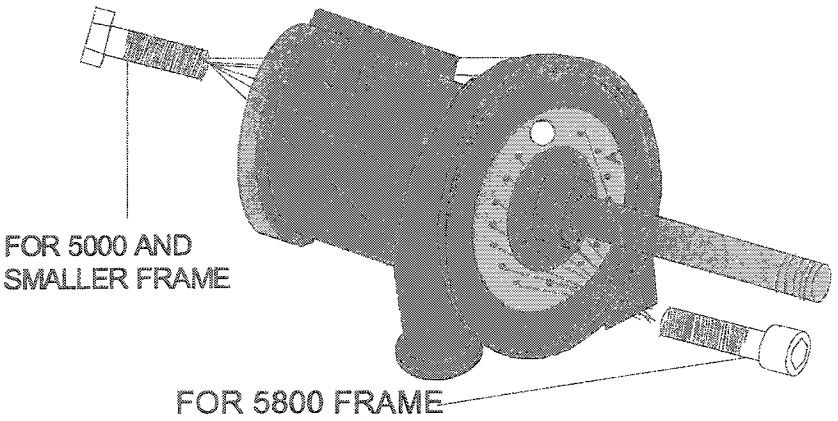

(g) Pick up on the slings to take up slack and remove the remaining bolts that secure the motor to the volute. Lift the motor slightly and move away from the volute being careful not to damage the motor shaft.

(h) Oil the shaft and cover all openings to prevent debris from entering the motor.

43 Volute diffuser plate removal.

(a) Remove four 1/2" allen head cap screws and insert two 6" long guide pins and two 4" long stop bolts.

(b) Remove the remaining allen head cap screws and slide the diffuser plate away from the volute. See Figure 28.

Figure 28

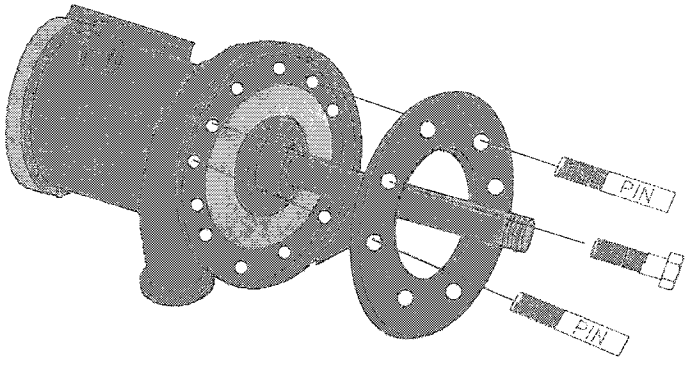

(c) Place a sling or cable in the choke configuration through to the center of the diffuser plate. See Table 2 for the weight of the diffuser plate.

(d) Lift the diffuser plate and remove the stop bolts.

(e) Slide the diffuser plate away from the volute. Oil the diffuser to prevent rusting.

44 Discharge volute removal.

(a) Remove the dowel pins on the discharge flange at the condenser and on the foot of the volute. First remove the threaded nut on the exposed end of the dowel pin. Then slip washers or a bushing over the pin and reinstall the nut. As the nut is tightened, the pin will be pulled out of place. The dowel pins allow for precise assembly of the compressor components in their original position.

(b) Place a sling in the choke configuration through the center of the volute. Take up the slack in the sling.

(c) Remove the bolts at the discharge flange and the compressor foot and then lift the volute. See Table 2 for volute weights.

(d) Clean and oil the discharge flange on the condenser and cover the opening to prevent entry of debris

Inspect all components for damage or excessive wear. Do not re-assemble the compressor using faulty components. Clean each component and apply a light coat of compressor oil to protect it from moisture and corrosion (especially o-ring and gasket surfaces).

Note: Refer to Centravac Literature Section CTVH-GCO-02 for the compressor re-assembly procedures.

Table 2
Compressor Component Weights (lb.)

Unit Type	Unit/ Comp Size 60HZ	Unit/Comp Size 50HZ	Economizer (Std. Less free cooling)	Suction Elbow	1st Stage Inlet Vane	1st Stage Suction Cover	Impellers All Stages	2nd Stage Alum. Vane Plate	2nd Stage Casing	3rd Stage Alum. Vane Plate	2nd or 3rd Stage Inlet Vanes & Plate	3rd Stage Casing	Steel Volute Diffuser Plate	Discharge Volute	Complete Compressor Including Motor
CVHE	016-020	016-020	300	203	200	715	37	90	820	90	70	768	162	800	5665
CVHE	023-032 230-320	023-320 190-270	385	266	240	1008	42	115	719	115	76	742	162	793	6880
CVHE	036-050 360-500	036-050 300-420	700	310	270	1050	42	130	875	130	82	775	162	910	7300
CVHE	056-080 560-800	056-080 470-660	840	494	300	1145	47	140	1132	140	88	880	232	1110	9175
CVHE	089-125 890-1250	089-125 740-1040	1230 lbs	706	350	1285	47	150	1257	150	93	1200	346	1608	11125
CVHG	N/A	480-565			311	1740		190	1840	190		1840	356	1418	
CVHG	N/A	670-780			408	1690		190	1990	190		1920	309	1430	
CVHG	N/A	920-1067			425	1718		190	2010	190		1920	309	1820	
CDHG*	N/A	1250			See Compressor Size CVHG 670										
CDHG*	N/A	1750			See Compressor Size CVHG 920										
CDHG*	N/A	2150			See Compressor Size CVHG 1067										

* Duplex Units. Suction elbow weight for each compressor.

Table 3
CVHE/CVHG Compressor Clearances

Model			1st Stage Impeller Nose Seal (in.)	2nd Stage Impeller Nose Seal (in.)	3rd Stage Impeller Nose Seal (in.)	Shaft Runout Max. TIR (in.)	Impeller Nose Runout Max. TIR (in.)		Interstage Seal to Shaft Spacer	Bearing Oil Seal to Shaft+ (in.)
CVHE										
50-60 Hz.	60 Hz.	50 Hz.	Radial Clearance	Radial Clearance	Radial Clearance		Cast*	Fab.*	Radial Clearance	See Note +
013	130	N/A	.0195-.0295	.0165-.0240	.0165-.0240	.0012	.0035	.0050	.0180-.0240	.0040-.0070
014	140	N/A	.0195-.0295	.0165-.0240	.0165-.0240	.0012	.0035	.0050	.0180-.0240	.0040-.0070
015&016	160	N/A	.0195-.0295	.0195-.0295	.0165-.0240	.0012	.0035	.0050	.0180-.0240	.0040-.0070
018	180	N/A	.0195-.0295	.0195-.0295	.0165-.0240	.0012	.0035	.0050	.0180-.0240	.0040-.0070
020	200	N/A	.0195-.0295	.0195-.0295	.0165-.0240	.0012	.0035	.0050	.0180-.0240	.0040-.0070
022	N/A	N/A	.0195-.0295	.0195-.0295	.0195-.0295	.0012	.0035	.0050	.0180-.0240	.0040-.0070
023	230	190	.0220-.0330	.0195-.0295	.0195-.0295	.0012	.0035	.0050	.0180-.0240	.0040-.0070
025	250	210	.0220-.0330	.0195-.0295	.0195-.0295	.0012	.0035	.0050	.0180-.0240	.0040-.0070
028	280	240	.0220-.0330	.0195-.0295	.0195-.0295	.0012	.0035	.0050	.0180-.0240	.0040-.0070
032	320	270	.0220-.0330	.0195-.0295	.0195-.0295	.0012	.0035	.0050	.0180-.0240	.0040-.0070
035&036	360	300	.0245-.0365	.0220-.0330	.0195-.0295	.0012	.0035	.0050	.0180-.0240	.0040-.0070
040	400	330	.0245-.0365	.0220-.0330	.0195-.0295	.0012	.0035	.0050	.0180-.0240	.0040-.0070
045	450	370	.0245-.0365	.0220-.0330	.0195-.0295	.0012	.0035	.0050	.0180-.0240	.0040-.0070
049	N/A	N/A	.0245-.0365	.0220-.0330	.0220-.0330	.0012	.0035	.0050	.0180-.0240	.0040-.0070
050	500	420	.0245-.0365	.0220-.0330	.0220-.0330	.0012	.0035	.0050	.0180-.0240	.0040-.0070
056	560	470	.0285-.0430	.0245-.0365	.0220-.0330	.0012	.0035	.0050	.0180-.0240	.0040-.0070
063	630	530	.0285-.0430	.0245-.0365	.0220-.0330	.0012	.0035	.0050	.0180-.0240	.0040-.0070
071	710	590	.0285-.0430	.0245-.0365	.0220-.0330	.0012	.0035	.0050	.0180-.0240	.0040-.0070
079	N/A	N/A	.0285-.0430	.0245-.0365	.0245-.0365	.0012	.0035	.0050	.0180-.0240	.0040-.0070
080	800	660	.0285-.0430	.0245-.0365	.0245-.0365	.0012	.0035	.0050	.0180-.0240	.0040-.0070
089	890	740	.0310-.0460	.0285-.0430	.0245-.0365	.0012	.0035	.0050	.0180-.0240	.0040-.0070
090	900	N/A	.0310-.0460	.0285-.0430	.0245-.0365	.0012	.0035	.0050	.0180-.0240	.0040-.0070
100&101	1000	830	.0310-.0460	.0285-.0430	.0245-.0365	.0012	.0035	.0050	.0180-.0240	.0040-.0070
112&113	1120	930	.0310-.0460	.0285-.0430	.0245-.0365	.0012	.0035	.0050	.0180-.0240	.0040-.0070
125	1250	1040	.0310-.0460	.0285-.0430	.0285-.0430	.0012	.0035	.0050	.0180-.0240	.0040-.0070
140	N/A	N/A	.0310-.0460	.0285-.0430	.0285-.0430	.0012	.0035	.0050	.0180-.0240	.0040-.0070
CVHG: 50 Hz.										
All Sizes			.0160-.0210	.0160-.0210	.0160-.0210	.0012	.0035	.0050	.0100-.0160	.0040-.0070

* Clearances shown for cast impellers and welded/fabricated impellers.

\+ Seal should be lightly touching bottom of shaft and maximum clearance at top.

Centravac General Service Literature

Compressor/Motor Record Sheet

Job Name:	*Disassembly:*	*CVHE:*
Technician:	*Assembly:*	*CVHF:*
Date:	*City:*	*CVHG:*
Unit Model:	*Serial #:*	

(in.)	*1st Stage Impeller Seal Clearance*
(in.)	*1st Stage Impeller Nose Runout*
(in.)	*1st Stage Impeller OD. to Diffuser Clearance*
(in.)	*Shaft Runout (TIR)*
(in.)	*1st Stage Spacer Seal Clearance*
(in.)	*2nd Stage Impeller Seal Clearance*
(in.)	*2nd Stage Impeller Nose Runout*
(in.)	*2nd Stage Impeller OD. To Diffuser Clearance*
(in.)	*2nd Stage Spacer Seal Clearance*
(in.)	*3rd Stage Impeller Seal Clearance*
(in.)	*3rd Stage Impeller Nose Runout*
(in.)	*3rd Stage Impeller OD. to Diffuser Clearance*
(in.) 12:00	*Oil Seal Clearance (Record 4 Places)*
(in.) 6:00	
(in.) 3:00	
(in.) 9:00	

Air-Run (Elbow Off)	*(in./sec. H)*	*(in./sec. V)*	*(in./sec. A)*
Air-Run (Elbow On)	*(in./sec. H)*	*(in./sec. V)*	*(in./sec. A)*
Freon-Run	*(in./sec. H)*	*(in./sec. V)*	*(in./sec. A)*

Comments:

Centravac General Service Literature

Table 4
Centravac Motor Weights

Unit Type	Unit/Compressor Size (60 Hz.)	Unit/Compressor Size (50 Hz.)	Low Voltage (208-600 Volts)	High Voltage (2300-6600 Volts)
CVHE	016-020 N/A	016-020 N/A	1568 lb. 711 kg.	N/A N/A
CVHE	023-032 230-320	023-032 190-270	1861 lb. 844 kg.	2641 lb. 1198 kg.
CVHE	036-050 360-500	036-050 300-420	2730 lb. 1238 kg.	2898 lb. 1315 kg.
CVHE	056-080 560-800	056-080 470-660	3554 lb. 1612 kg.	3991 lb. 1810 kg.
CVHE	089-125 890-1250	089-125 740-1040	4464 lb. 2025 kg.	4598 lb. 2086 kg.
CVHG	N/A	480-565	3560 lb. 1615 kg.	3968 lb. 1800 kg.
CVHG	N/A	670-780	3845 lb. 1744 kg.	4359 lb. 1977 kg.
CVHG	N/A	920-1067	4562 lb. 2069 kg.	4696 lb. 2130 kg.
CDHG	N/A	1250	3677 lb. 1668 kg.	3952 lb. 1793 kg.
CDHG	N/A	1750	3845 lb. 1744 kg.	4359 lb. 1977 kg.
CDHG	N/A	2150	4562 lb. 2069 kg.	4696 lb. 2130 kg.

Figure 29
Compressor Cross-Section View

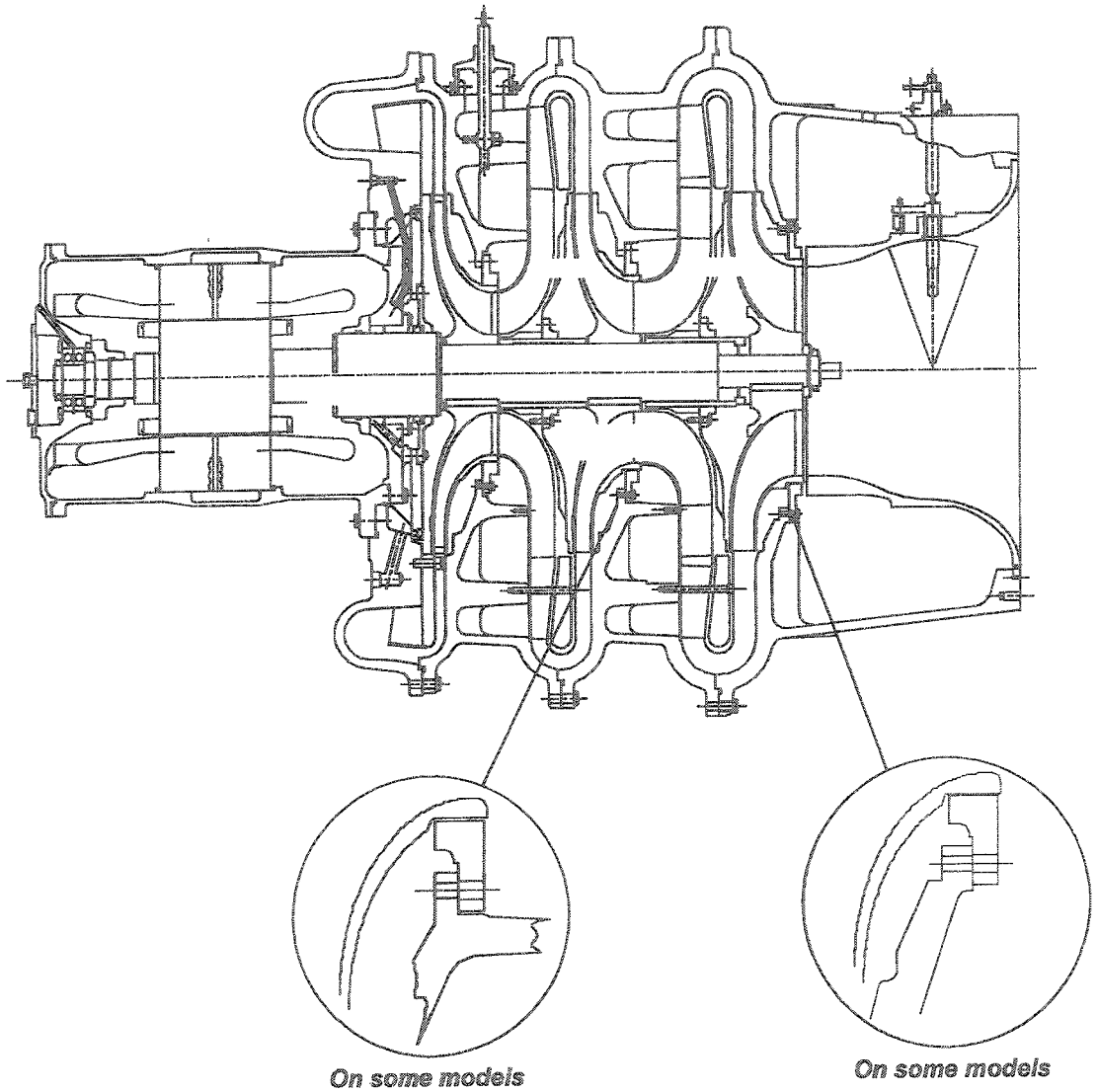

Centravac General Service Literature

Centravac General Service Literature Section CTVH-GCO-02-EN

CVHE/CVHG Compressor Assembly (Including)

- Discharge Volute Installation
- Motor Installation
- Unit Mounted Starter Installation
- Compressor Assembly
- Suction Elbow Installation
- Economizer Installation

CVHE (E-Design And Later), CVHG AND CDHG Duplex Unit: Compressor Sizes 013-140 and 350-1280 Ton

This section describes assembly (including discharge volute, motor, unit mounted starter, suction cover and economizer installation) procedures for the model CVHE AND CVHG CenTraVac 3 stage compressor assemblies. The same information applies to the compressors for the CDHG duplex units. For disassembly and re-assembly procedures for the motor see Centravac Service Literature Section CTVH-GMO-01. The procedures covered in this section may be used for the CVHE (E design sequence and later) and all CVHG compressor sizes (013 through 140) and (130 through 1250) tons. For information on the CVHF compressors see Centravac Literature Sections CTVH-GCO-03 & 04 for compressor sizes (350 through 1280), and CTVH-GCO-05 & 06 for the extended capacity compressor sizes 1470 and 1720.

Warning and Cautions

WARNINGs and CAUTIONs appear at appropriate sections throughout this manual. Read these carefully.

⚠ WARNING: indicates a potentially hazardous situation which, if not avoided, could result in death or serious injury.

⚠ CAUTION: indicates a potentially hazardous situation which, if not avoided, may result in minor or moderate injury.

CAUTION: may also be used to alert the reader to a situation that could result in equipment or property-only damage.

Centravac General Service Literature

IMPORTANT: Before beginning re-assembly of the compressor, it is important to check all pieces for damage, rust, or worn parts that could result in leaks or problems with unit operation or reliability. Clean all gasket and o-ring surfaces thoroughly. All traces of previous sealants must be completely removed and the surfaces wiped with a suitable solvent such as industrial grade isopropyl alcohol to remove all traces of oil and other contaminants. When using Loctitè between flanges do not touch the flanges after cleaning and before application of Loctite. The oils left from fingerprints can affect the sealing ability of the Loctite. Check flange surfaces for high spots left around bolt holes and at jack bolt locations. These high spots can cause flange separation and may result in leaks. If necessary use a flat file to remove high spots.

⚠ WARNING
Hazardous Chemicals!
Always use proper protection when handling solvents and other potentially harmful chemicals. Use rubber gloves, clothing and eye protection and avoid prolonged inhalation of vapors. Failure to do so can result in death or serious injury.

IMPORTANT: See the chemicals MSDS (Material Safety Data Sheet) for additional precautions and warnings on use.

The procedures for using an o-ring sealant can be found in General Service Bulletin CTV-SB-66 (latest revision).

⚠ WARNING
Heavy Objects!
Use lifting and rigging equipment that is rated to handle the maximum weights. Improper use of lifting fixtures may result in death or serious injury.

Follow all proper procedures when handling large compressor components. Use lifting and rigging equipment that is rated to handle the maximum weights of the pieces found in Table 2 in the back of this literature section. It is recommended that all lifting devices have a capacity rating no less than 100% of the weights shown. Carefully inspect lifting equipment to ensure it is in good condition and has been inspected and certified for continued use at proper intervals as appropriate.

For larger units it may be advisable to block larger components like the economizer and piping when the bolts are removed and then use slings (in the choke configuration) at each end to lift the part. See Table 2 for weights of components. Make sure the proper balance point of the load is found, to prevent it from rotating as it is lifted. See Figure 1 for proper sling use.

Centravac General Service Literature

Note: The lifting capacity of a sling is reduced when the load angle is less than 90°. See Table 1 for load factor values. For angles less than 90°, multiply the load factor by the nominal sling lifting capacity to determine the allowed lift weight.

Figure 1
Typical Choke Sling Cable Arrangement

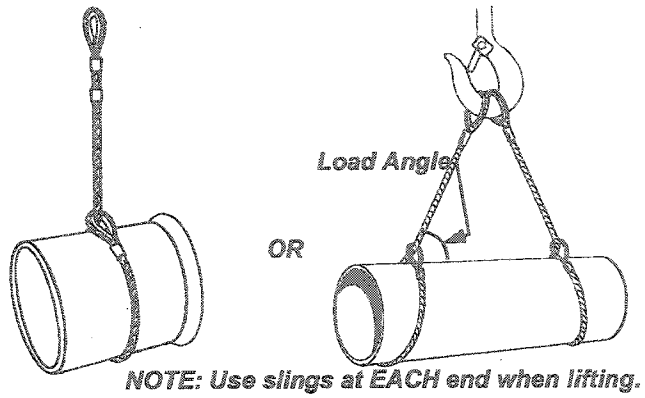

Table 1

Load Angle (°)	Factor	Load Angle (°)	Factor
90	1.000	50	0.7660
85	0.9962	45	0.7071
80	0.9848	40	0.6428
75	0.9659	35	0.5736
70	0.9397	30	0.5000
65	0.9063	25	0.4226
60	0.8660	20	0.3420
55	0.8192	15	0.2589

Before proceeding with compressor re-assembly review the procedures in General Literature Section CTVH-GCO-01EN containing information and details on compressor disassembly.

Unless otherwise specified, the bolt torques required on all flange joints with o-rings or joints where only Loctite 515 is used, can be found in Table 3 in the back of this section. The bolt torques listed in Table 3 are for Grade 5 bolts. *Use only grade 5 bolts or better.* Tighten bolts to final torque in incremental steps. Unless otherwise specified follow a crossing pattern when tightening bolts. See Figure 2 for a typical recommended bolt tightening sequence. The recommended bolt torque values in Table 3 do not apply to bolts used with flat gaskets. Bolt torques for flat gaskets will be provided in the sections covering their installation.

Figure 2

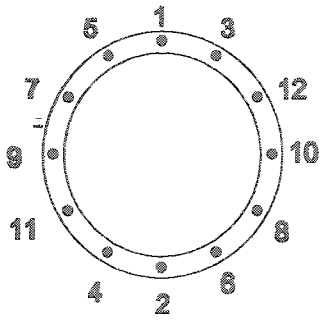

⚠ WARNING
Hazardous Voltage!
Before working on this or any electrical equipment, always disconnect the electric power supply. Follow proper lockout/tagout procedures to ensure the power cannot be applied during repairs. Failure to do so may result in death or serious injury.

Re-assembly

1 Discharge Volute Installation

(a) Clean the dowel pins and the dowel pin holes in the condenser discharge flange and evaporator mounting base to remove rust or other debris. Lightly coat the pins with a petroleum jelly or anti-seize compound.

(b) Clean the flanges and apply Loctite 515 and o-ring (when applicable) as recommended.

IMPORTANT: See Service Bulletin CTV-SB-66 (latest revision) for procedures for using Loctite 515. Always check the date on the Loctite tube to ensure the sealant use time has not expired.

(c) Using a sling or cable in the choke configuration through the center of the volute for lifting. Be sure to protect the flange surfaces when using a cable. Place the volute on the condenser and line up the dowel holes.

(d) Tap the dowels in place as the bolts in the foot and discharge flange are tightened. Torque the bolts per Table 3 in the back of this section.

2 Motor Installation.

(a) Before installing the motor, check shaft runout (TIR) as shown in Figure 3. Using a dial indicator turn the shaft and measure the runout at the end of the shaft. The maximum allowable runout is .0012" TIR. Make sure the end of the shaft is wrapped with tape for protection during assembly.

Figure 3

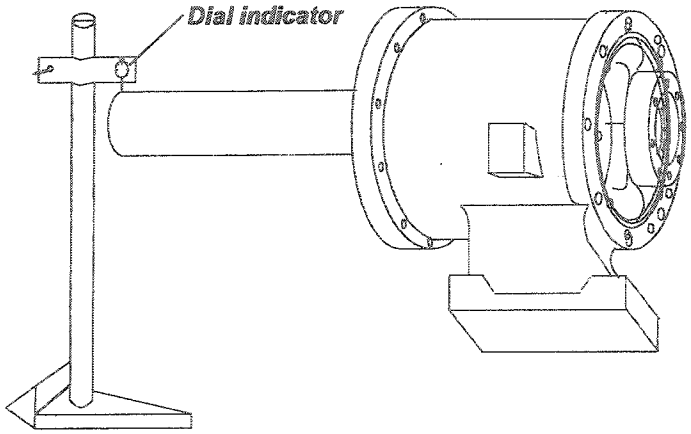

(b) Place two slings or cables in the choke configuration around the motor. Place them at each end of the motor near the flanges and lift the motor slightly to get the proper balance point. See Table 4 for maximum motor weights.

(c) Apply Loctite 515 and o-ring (when applicable) around the motor (shaft end) end bell.

(d) Install two guide pins in the volute or motor flange (large frame) to help guide the motor in place. See Figure 4.

Figure 4

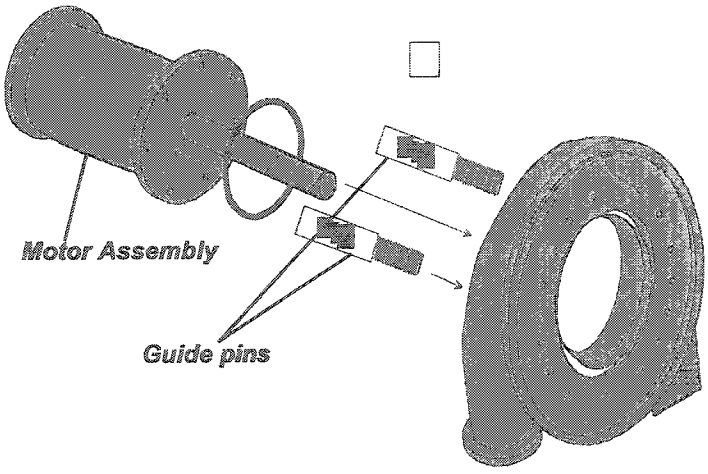

(e) Lift the motor in place and hand tighten the bolts holding the motor to the volute (Figure 5). Snug the bolts and remove the guide pins. Note on some large frame motors, the bolts (allen head) that hold the motor to the volute are located on the compressor side of the volute. The proper torque for both styles of bolts is 120-165 lb-ft.

Figure 5

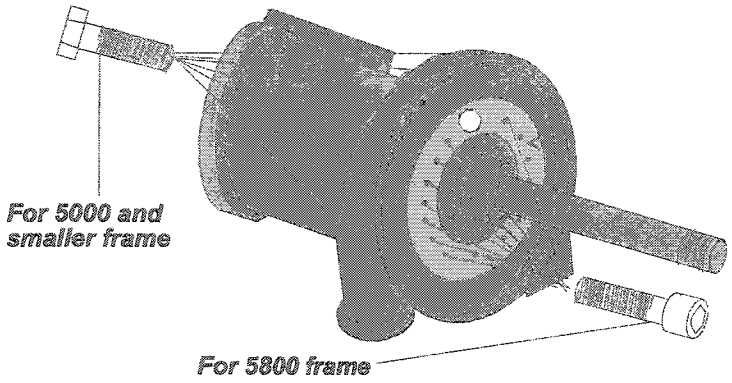

3 Volute Diffuser Plate Installation.

(a) Install two pins in the volute to guide the diffuser in place.

(b) Place a sling or cable in the choke configuration through the center of the diffuser.

(c) Lift the diffuser and slide it over the guide pins. Install countersunk screws and torque them to 55-75 lb-ft. Make sure the screws in the counterbore area behind impeller do not protrude more than .060" above the surface.

Figure 6

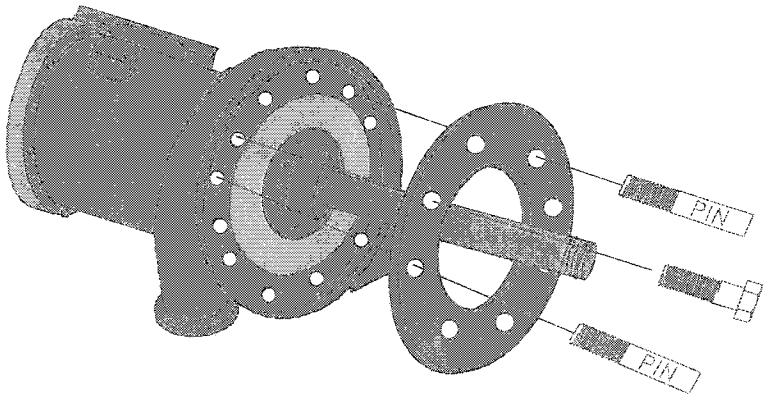

4 Oil Feed Tube Installation.

(a) Clean the ends of the lines thoroughly using a scotch bright pad or equivalent for metal. See Figure 7. Remove as much of the old brazing material as possible. Clean the inside of the couplings using a steel tubing brush. Use Loctite 277 Sealant on the threads.

Figure 7

1 *Cover holes to prevent water from collecting in the oil drain tube*

2 *Cool joints with wet rag*

3 *Apply air pressure and leak test*

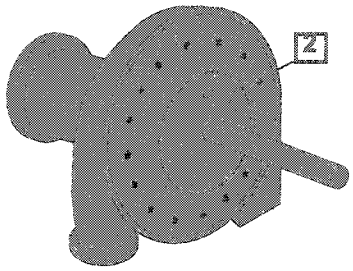

(b) Wrap a wet rag around both ends of the line to prevent overheating the threaded joints.

(c) Using a regulator, allow a slight purge of dry nitrogen to flow through the volute threaded fitting and oil supply line to prevent a buildup of oxidation when brazing.

(d) Braze the lines as shown in Figure 8 using a good Sil-Fos material with 5-15% (Ag) silver.

Figure 8

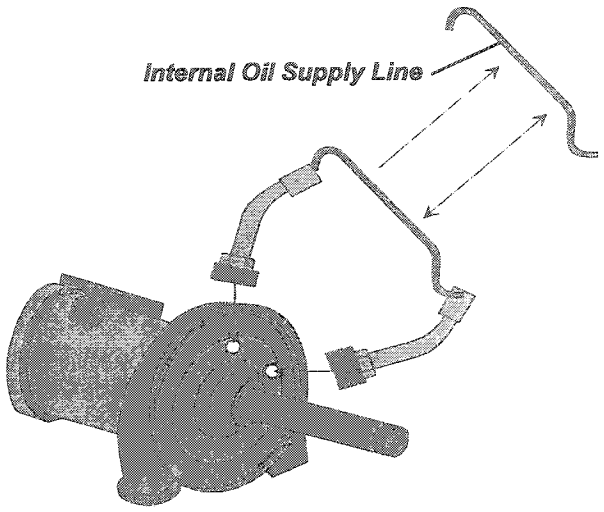

(e) After brazing, allow the lines to cool. Increase the nitrogen pressure and check the line and threaded fittings for a leak using a soap solution.

5 Bearing Cover Plate Installation

(a) Install two guide pins in both the inner and outer bolt centers to help hold the gaskets in place and to align the cover plate.

(b) Lightly coat both the inner and outer gaskets with a small amount of petroleum jelly to help hold them in place.

(c) Using a sling or cable in the choke configuration, slide the bearing cover plate in place while observing the gaskets to make sure they do not move out of position. See Figure 9.

Figure 9

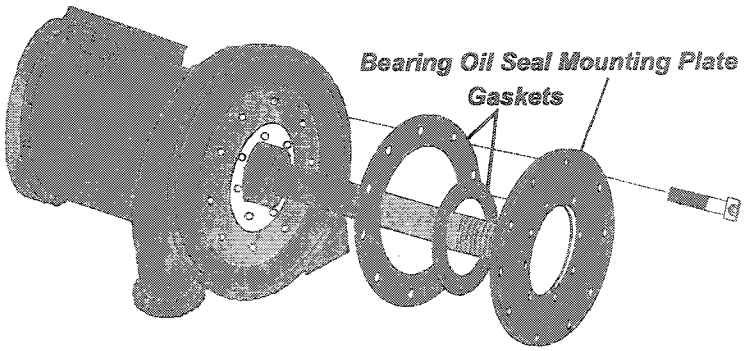

(d) Install the outer mounting bolts. Remove the outer guide pins and torque the bolts to 20-27 lb-ft.

6 Bearing Oil Seal Installation.

(a) Lightly coat the bearing oil seal gasket (between the bearing cover plate and oil seal) with a small amount of petroleum jelly to help hold it in place. Make sure the gasket behind the bearing cover plate is still in its proper position.

(b) Slide the bearing oil seal over the guide pins. **IMPORTANT: The oil seal has a drain hole between the teeth of the seal that must be installed at the 6 o'clock position.** Install the mounting bolts with ramp washers and hand tighten. Remove the guide pins.

*NOTE: Check the clearance between the bearing oil seal and the shaft outside diameter at the seal location. The maximum allowable total clearance is .0040-.0070". **IMPORTANT:** Clearances in excess of this amount will lead to oil loss.*

(c) Push up on or lightly tap the seal until the bottom of the seal touches the bottom of the shaft. Position the seal so the clearances on each side of the seal (3 and 9 o'clock) are equal. Using a feeler gauge, measure the total clearance at the 12 o'clock position and the clearances at the sides. It is recommended that a new oil seal be used if there is any question about the total clearance of the existing seal.

Figure 10

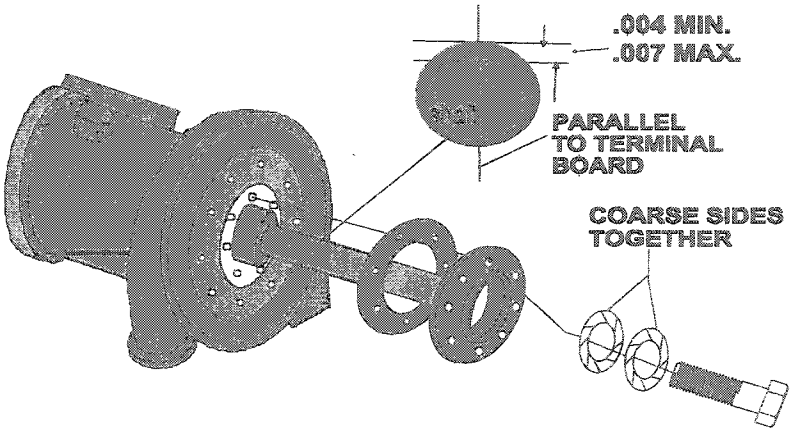

(d) With all the clearance at the top of the seal, tighten the bolts to 20-27 lb-ft. Recheck the clearance and rotate the shaft to ensure it turns freely. See Figure 10.

(e) At this point you may want to run only the motor to check for balance. This is desirable if a replacement motor is being installed or if the rotor was changed or repaired. See *General Service Bulletin CVHE-SB-18* (latest revision) for the procedures when air running motors.

7 3rd Stage Impeller Installation.

(a) Clean the impeller shims. Slide the impeller shims with the thicker steel shim against the shaft shoulder. *Note: The chamfer on the thicker steel shim should be facing the shaft shoulder.* Impeller alignment should have been checked during disassembly and any adjustments to the shim(s) thickness necessary to get proper impeller alignment can be made at this time. If the impeller or motor shaft has been replaced, then you may want to use only the steel spacer for an initial alignment to determine how many additional shims may be required.

(b) Thoroughly clean the impeller, key and shaft. Check the impeller bore for cracks. This can be done using a dye penetrant flaw detection kit. These kits are available through most weld supply or large industrial supply companies. The kits usually consist of a penetrant, developer, and cleaner and include instructions on their use. Replace the impeller if cracked. Some types of damage to the impeller bore or nose seal area on impellers can be repaired by The Trane Company.

(c) Check the impeller key and keyway in the impeller bore for damage. Check to ensure the sides of the keyway in the impeller bore are square.

(d) Coat the impeller bore and shaft with compressor oil. Install the key in the shaft. Slide the impeller on the shaft until it contacts the shims. Check the alignment of the impeller. The back inside discharge surface of the impeller should be flush to no more than a .0050" set out beyond the face of the diffuser plate. See Figure 11.

Figure 11

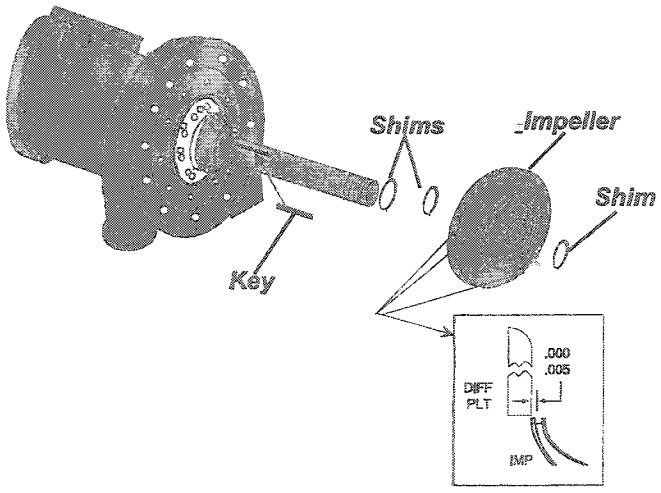

If the impeller does not slide easily on the shaft, it may be necessary to heat the impeller slightly to allow it to slide on the shaft. Before heating the impeller, inspect the impeller bore for debris or a dent (high spot) that could be causing interference. When heating the impeller, use a large (Rosebud) tip with a soft gentle flame. The impeller should be heated so that it is warm to the touch. Do not exceed 120° F. *The impeller bore (ID) to shaft diameter (OD) total clearance should be .0000 - .0015" maximum.*

(e) When required, remove the impeller and add shims to obtain the proper alignment. Slide the impeller on the shaft and recheck the alignment.

(f) Check the radial clearance between the impeller OD and the vane plate ID The minimum clearance around the entire circumference is .0220" minimum. If necessary loosen the diffuser plate and reposition it to obtain proper clearance.

(g) Check the impeller nose runout using a dial indicator with a magnetic base. Rotate the impeller and measure the maximum runout (see Figure 12). The allowable maximum runout for fabricated (welded) impellers is .0050" and .0035" for cast style impellers.

Figure 12

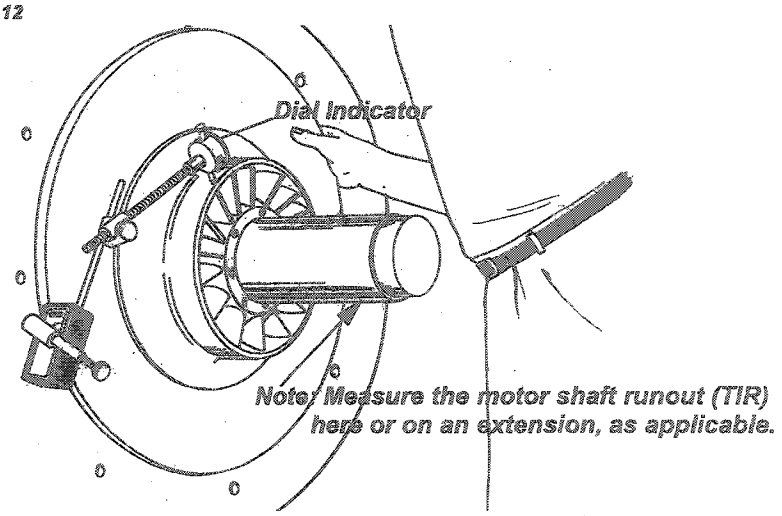

(h) Install the shim(s) removed during disassembly in front of the 3rd stage impeller.

8 3rd Stage Suction Cover Installation.

(a) Clean the cover and discharge volute.

(b) Attach the lifting fixture to the suction cover and find the proper balance point.

(c) Apply Loctite 515 and an o-ring (when applicable) per recommended procedures.

(d) Install four guide pins to help align the suction cover as shown in Figure 13. Make sure the scribe marks between the volute and the suction cover are lined up before final tightening of the bolts.

Figure 13

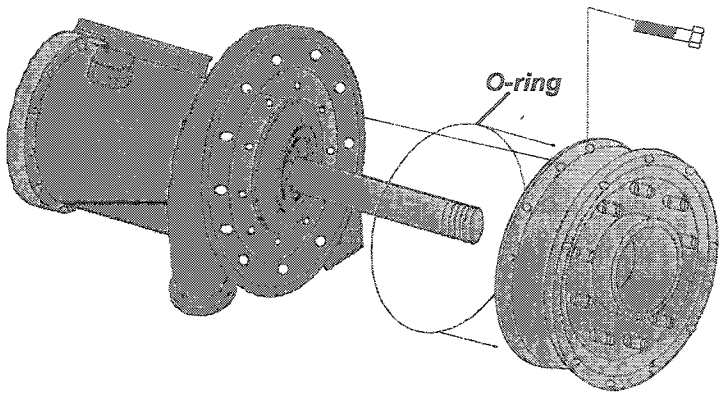

(e) Install bolts and torque to 120-165 lb-ft.

9 Impeller Nose Seal Installation.

(a) Thoroughly clean the nose seal to remove any debris or loose chips from the labyrinth teeth.

(b) Use the original bolts and new locking tab washers.

(c) Using a feeler gauge, center the seal around the nose of the impeller. The proper clearance can be found in Table 5.

Figure 14

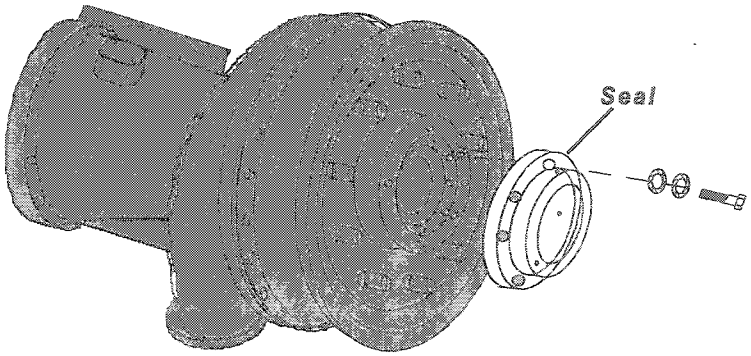

(d) With the seal set properly, tighten the bolts to 20-27 lb-ft. Recheck seal clearance.

(e) Rotate the shaft to ensure it turns freely.

10 3rd Stage Vanes Assembly Installation.

(a) Install two guide pins in the suction cover to help align the shroud and vane assembly.

(b) Use a sling to lift the vane assembly in place. It is recommended that new screws be used. If reusing the original screws, coat the threads with a thread locking compound. New screws will have a nylon locking insert. It is recommended the new screws also be coated with a thread locking compound. See Figure 15.

Figure 15

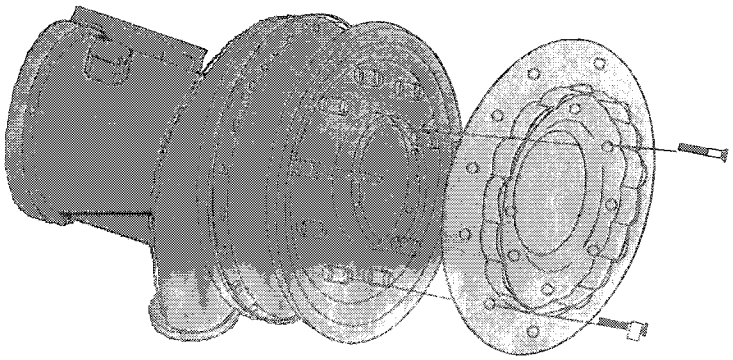

(c) Tighten the allen head screws to 5-7 lb-ft.

11 3rd Stage Vane Operator Assembly Installation.

(a) Clean the flange on the suction cover and vane operator assembly.

(b) Clean any powder residue from the new gasket. The gasket should be installed dry. Slide the fork of the vane operator lever over the pin in the vane drive ring pin assembly.

(c) Tighten bolts to 33-50 lb-ft. See Figure 16.

Figure 16

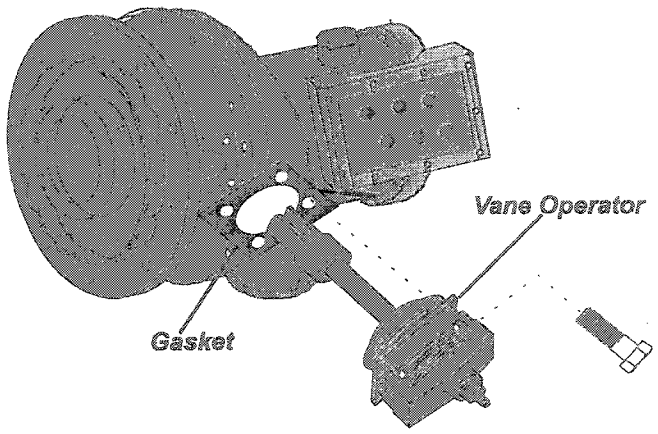

(d) Open and close the vane assembly to ensure it operates freely. Check to make sure the vanes close completely and open fully.

12 3rd Stage Aluminum Vane Plate Installation.

(a) Before installing the vane plate, make sure the shim in front of the impeller has been installed.

(b) Clean the aluminum plate.

(c) Insert the four guide pins to help align and hold the vane plate during installation.

(d) Lift the plate through the center using a sling in the choke configuration.

(e) It is recommended that new bolts be used. If reusing the original bolts, coat the threads with a thread locking compound. New bolts have a nylon locking insert. See Figure 17.

Figure 17

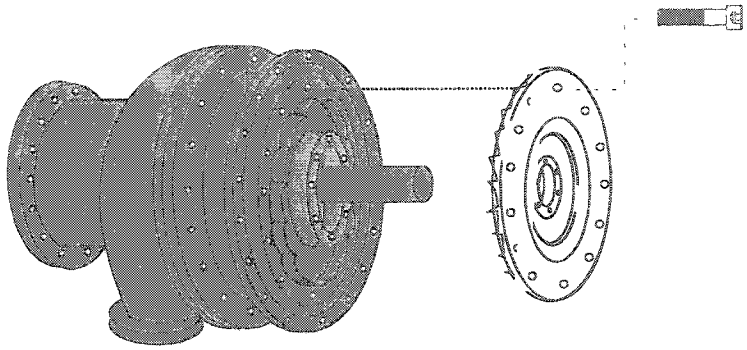

(f) Tighten the bolts to 20-27 lb-ft.

13 Interstage Spacer Installation.

(a) Slide the spacer and shims on the shaft. Make sure the spacer, which was marked during disassembly, is placed back on the shaft in the proper position. This will help maintain proper balance if all the rotating components are being re-used.

Figure 18

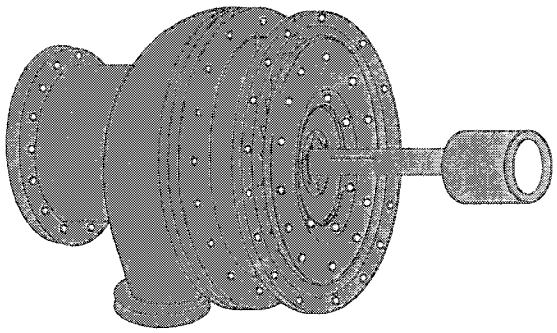

14 Interstage Spacer Seal installation.

(a) Install the seal and bolts with a ramp washer over the interstage spacer.

(b) Center the seal using a feeler gauge. The allowable tolerance can be found in Table 5.

(c) Tighten the bolts to 20-27 lb-ft. See Figure 19

Figure 19

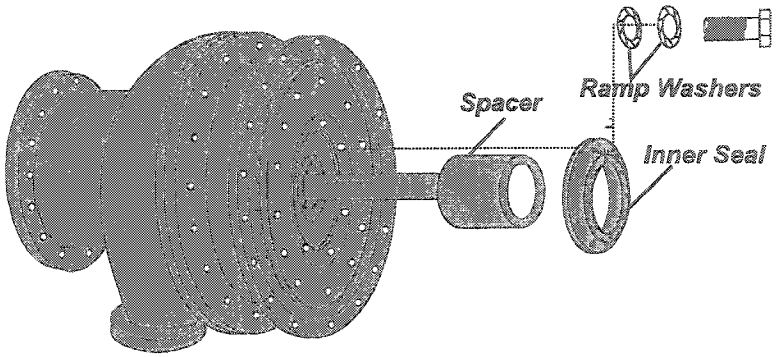

15 2nd Stage Impeller Installation.

(a) Clean the impeller shims and slide them up against the interstage spacer. Impeller alignment should have been checked during disassembly and any adjustments to the shim(s) thickness necessary to get proper impeller alignment can be made at this time. If the impeller or motor shaft has been replaced, then you may want to use only a portion of the original shims for an initial alignment to determine how many additional shims may be required.

(b) Thoroughly clean the impeller, key and shaft. Check the impeller bore for cracks. This can be done using a dye penetrant flaw detection kit. (These kits are available through most weld supply or large industrial supply companies. The kits consist of a penetrant, developer and cleaner and include instructions on their use.) Replace the impeller if cracked. Some types of damage to the impeller bore or nose seal area on impellers can be repaired by The Trane Company.

(c) Check the impeller key and keyway in the impeller bore for damage. Check to ensure the sides of the keyway in the impeller bore are square.

(d) Coat the impeller bore and shaft with compressor oil. Install the key in the shaft. Slide the impeller on the shaft until it contacts the shims. Check alignment of the impeller. The back inside discharge surface of the impeller should be flush to no more than a .0050" set out beyond the face of the vane plate. See Figure 20. The back plate on welded impellers may have some distortion due to the weld process. Locate the impeller back inside edge (lowest point) so it is flush with the vane plate.

Figure 20

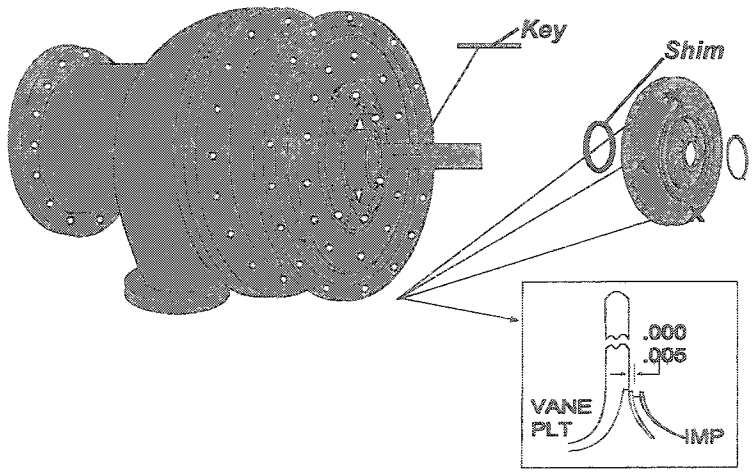

If the impeller does not slide easily on the shaft, it may be necessary to heat the impeller slightly to allow it to slide on the shaft. Before heating the impeller, inspect the impeller bore for debris or a dent (high spot) that could be causing interference. When heating the impeller, use a large (Rosebud) tip with a soft gentle flame. The impeller should be heated so that it is warm to the touch. Do not exceed 120° F. The impeller bore (ID) to shaft diameter (OD) total clearance should be .0000 - .0015" maximum.

(e) When required, remove the impeller and add shims to obtain the proper alignment. Slide the impeller on the shaft and recheck alignment.

(f) Check the radial clearance between the impeller OD and the diffuser ID The minimum clearance around the entire circumference is .0220". If necessary, loosen the vane plate and reposition it to obtain proper clearance.

(g) Check the impeller nose runout using a dial indicator with a magnetic base. Rotate impeller and measure the maximum runout. The allowable maximum runout for fabricated (welded) impellers is .0050" and .0035" for cast style impellers.

(h) Install the shim removed during disassembly in front of the 2nd stage impeller.

16 2nd Stage Suction Cover Installation.

(a) Clean the cover and mating surface on the 2nd stage cover. Remove any old sealing compound and wipe surfaces with a suitable solvent to remove oil or grease.

(b) Attach the lifting fixture to the suction cover and find the proper balance point.

(c) Apply Loctite 515 and an o-ring (when applicable) per recommended procedures.

(d) Install four guide pins to help align the suction cover as shown in Figure 21. Make sure the scribe marks between the 3rd stage cover and 2nd stage cover are lined up before final tightening of bolts.

Figure 21

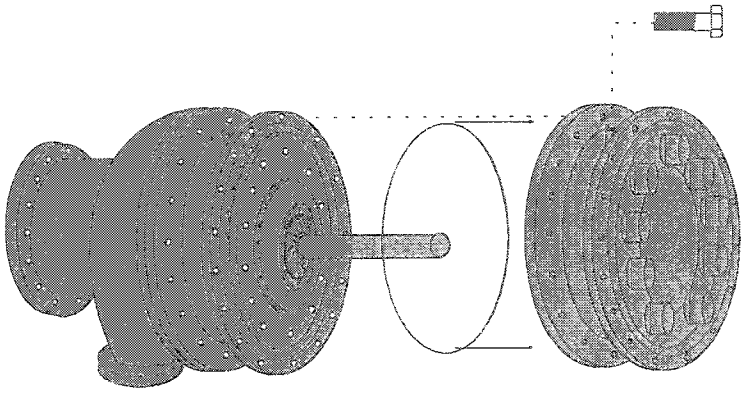

(e) Install the bolts and torque to 120-165 lb-ft.

17 Impeller Nose Seal Installation. (See Figure 22)

(a) Thoroughly clean the nose seal to remove any debris or loose chips from the labyrinth teeth.

(b) Use the original bolts and new locking tab washers.

(c) Using a feeler gauge, center the seal around the nose of the impeller. The proper clearance can be found in Table 5.

Figure 22

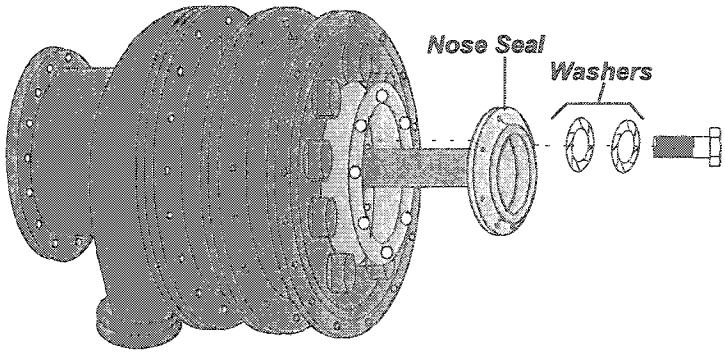

(d) With the seal set properly, tighten the bolts to 20-27 lb-ft. Recheck the seal clearance.

(e) Rotate the shaft to ensure it turns freely.

18 2nd Stage Vane Shroud Installation.

(a) Install two guide pins in the suction cover to help align the shroud assembly.

(b) Lift the shroud assembly in place. It is recommended that new screws be used. If reusing the original screws, coat the threads with a thread locking compound. New screws will have a nylon locking insert. It is recommended that new screws also be coated with a thread locking compound. See Figure 23.

(c) Tighten the allen head screws to 5-7 lb-ft.

Figure 23

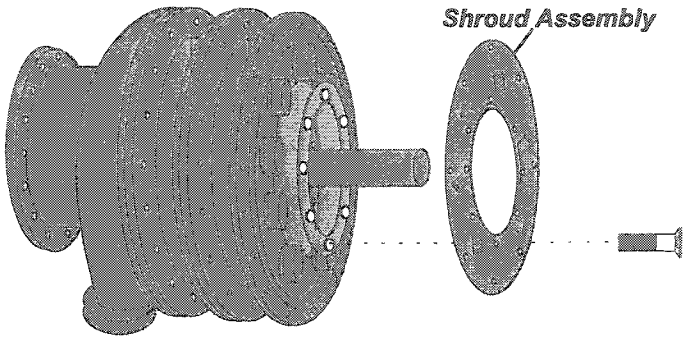

19 2nd Stage Aluminum Vane Plate Installation.

(a) Before installing the vane plate, make sure the shim in front of the impeller has been installed.

(b) Clean the aluminum plate.

(c) Insert four guide pins to help align and hold the vane plate during installation.

(d) Lift the plate through the center using a sling in the choke configuration.

(e) It is recommended that new bolts be used. If reusing original bolts, coat the threads with a thread locking compound. New bolts have a nylon locking insert. See Figure 24.

(f) Tighten the bolts to 20-27 lb-ft.

Figure 24

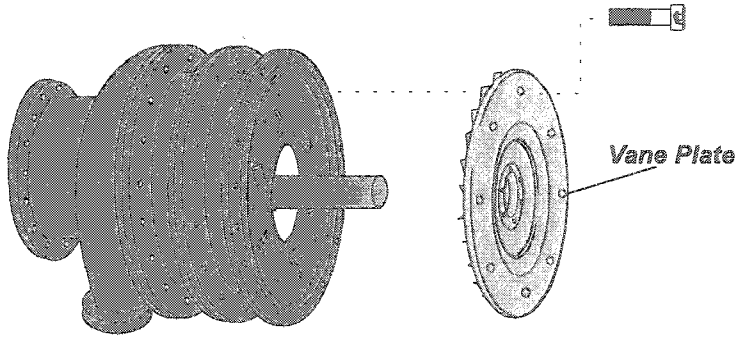

20 Interstage Spacer Installation.

(a) For units with a the large diameter (straight) shaft at the 1st stage impeller location, slide the shim and spacer on the shaft that was removed during disassembly (see Figure 25). Make sure the spacer, which was marked during disassembly, is placed back on the shaft in the proper position. This will help maintain proper balance if all the rotating components are being re-used.

Figure 25

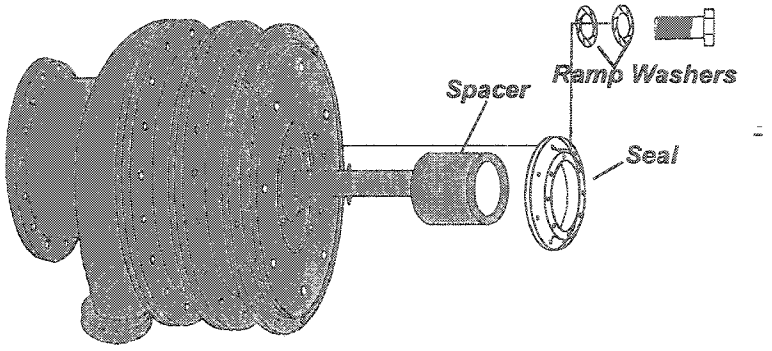

(b) Some units have a step shaft, where the shaft diameter for the 1st stage impeller is smaller than the remainder of the shaft. Depending on unit size and design sequence, there may be a .500" aluminum spacer mounted against the 2nd stage impeller hub and then a longer aluminum spacer that steps down to the smaller shaft diameter. Some units will have a thin shim against the 2nd stage impeller, a long aluminum spacer tube, and then an end spacer that fits inside the tube. Make sure the spacer tube and end spacer (when used), which were marked during disassembly, are placed back on the shaft in the proper position. (See Figure 26.) This will help maintain proper balance if all the rotating components are being re-used.

Figure 26

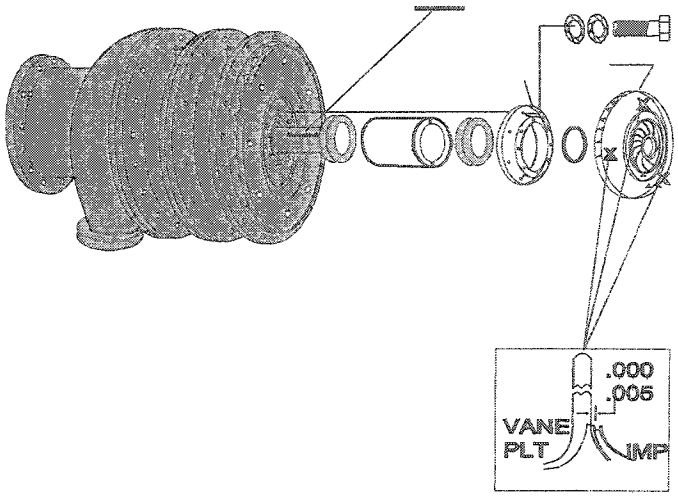

21 Interstage Spacer Seal installation.

(a) Install the seal with bolts and ramp washers over the interstage spacer.

(b) Hand tighten the bolts and center the seal using a feeler gauge. The allowable tolerance can be found in Table 5.

(c) Tighten the bolts to 20-27 lb-ft.

Figure 27

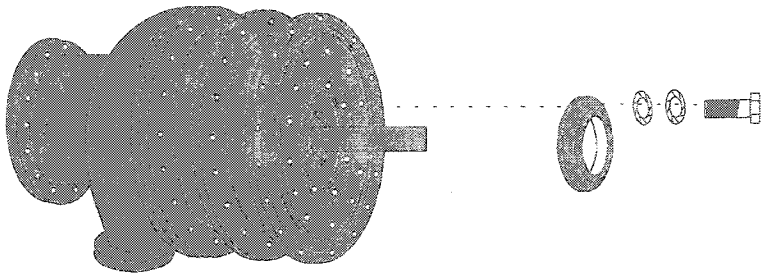

22 1st Stage Impeller & Impeller Locknut Installation.

(a) Clean the impeller shims. Slide the impeller shims against the interstage spacer. Impeller alignment should have been checked during disassembly and any adjustments to the shim(s) thickness necessary to get proper impeller alignment can be made at this time. If the impeller or motor shaft has been replaced, then you may want to use only a portion of the original shims for an initial alignment to determine how many additional shims may be required.

(b) Thoroughly clean the impeller, key, and shaft. Check the impeller bore for cracks. This can be done using a dye penetrant flaw detection kit. Replace the impeller if cracked. Some types of damage to the impeller bore or nose seal area on impellers can be repaired by The Trane Company.

Figure 28

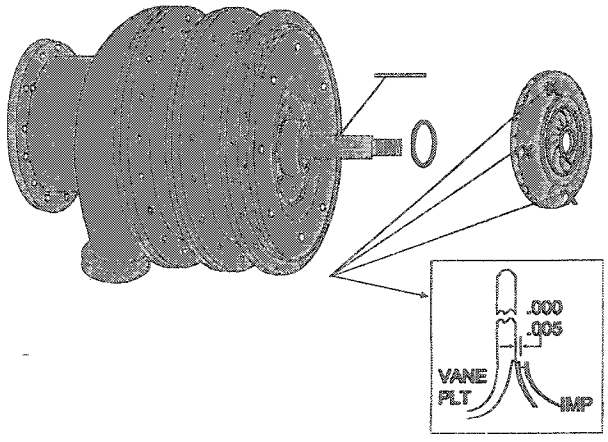

(c) Check the impeller key and keyway in the impeller bore for damage. Check to ensure that the sides of the keyway in the impeller bore are square.

(d) Coat the impeller bore and shaft with compressor oil. Install the key in the shaft. Slide the impeller on the shaft until it contacts the shims. Check the alignment of the impeller. The back inside discharge surface of the impeller should be flush to no more than a .0050" set out beyond the face of the diffuser plate. See Figure 28.

If the impeller does not slide easily on the shaft, it may be necessary to heat the impeller slightly to allow it to slide on the shaft. Before heating the impeller inspect the impeller bore for debris or a dent (high spot) that could be causing interference. When heating the impeller, use a large (Rosebud) tip with a soft gentle flame. The impeller should be heated so that it is warm to the touch. Do not exceed 120°F. The impeller bore (ID) to shaft.

(e) When required, remove the impeller and add shims to obtain the proper alignment. Slide the impeller on the shaft and recheck the alignment.

(f) Check the radial clearance between the impeller OD and the vane plate ID The minimum clearance around the entire circumference is .0220" minimum. If necessary, loosen the diffuser plate and reposition it to obtain proper clearance.

(g) Before installing the spacer, conical (spring) washer, and lockwasher on the shaft, (Figure 29) thread the locknut on by hand to ensure there are no burrs or damaged threads etc. The locknut thread fit should be snug but may be turned by hand without use of a spanner wrench. Install the spacer, spring (conical shaped) washer, lockwasher, and impeller locknut on the shaft and tighten by hand until all clearance has been taken up in the assembly. Make sure the spring washer is installed so the concave side is toward the impeller as shown in Figure 29.

Figure 29

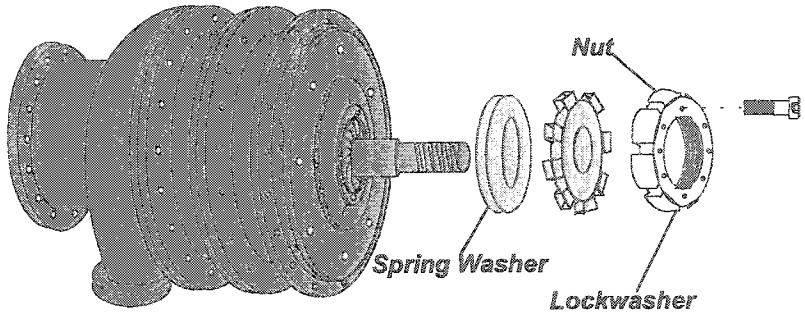

(h) Rotate the shaft so that the 1st stage impeller key is at the 12 o'clock position.

(i) Some compressors have a balance/locknut with weights. If all original compressor components (motor/rotor, impellers, spacers etc.) are being re-used, then the weights may be left on the balance nut. Once the locknut has been hand tightened, place a mark on the locknut and the impeller hub. Tighten the locknut the required rotation as described below.

Small Locknut:

Once hand tightened, the small locknut (less than 2.500") should be rotated another 360-390 degrees using a spanner wrench and brass hammer or special socket and impact wrench. Use the marks described above to determine the rotation of the nut compared to the impeller. Once reaching 360 degrees of rotation, look for the next

locking tab on the lockwasher that will fit into a notch in the locknut. Do not overtighten the locknut as it is possible to cause shaft bending and runout, which could result in vibration problems.

Large Locknut:

Once hand tightened, the large locknut (greater than 4.000") should be rotated 170-180 degrees. Use the marks to determine the rotation of the nut compared to the impeller. Once reaching 170 degrees of rotation, look for the next locking tab on the lockwasher that will fit into a notch in the locknut. Do not overtighten the locknut as it is possible to cause shaft bending and runout, which could result in vibration problems.

When reusing a locknut with balance weights, make sure the match marks made during disassembly are aligned in their original position after the nut is tightened properly. See the Disassembly section.

IMPORTANT: If the rotating components have been reused and the balance weights do not line up as originally marked, the balance weights should be removed.

IMPORTANT: If the rotating components have been replaced or were not marked during disassembly or do not line up as originally marked, the balance weights should be removed.

(j) Once the locknut has been properly tightened, bend over a tab on the locking washer. It is recommended that a new lockwasher be used during re-assembly.

CAUTION

Compressor Damage!

Once a locking tab has been bent over on a lockwasher it may become weak and break off if the same tab is re-used. This could cause the impeller locknut to loosen and come off during operation, causing major damage to the compressor and motor.

(k) Check the impeller nose runout using a dial indicator with a magnetic base. Rotate the impeller and measure the maximum runout. The allowable maximum runout for fabricated (welded) impellers is .0050" and .0035" for cast style impellers.

(l) For shafts with the extension beyond the locknut or units with balance nuts, check the shaft runout after the locknut is tightened. Checking shaft runout on units without the balance nut or shaft extension will be difficult since the standard locknut does not have a smooth machined surface where the indicator can be used. Rotate the shaft and measure the maximum shaft runout. The allowable maximum shaft runout is .0012"

23 1st Stage Suction Cover Installation.

(a) Clean the cover and mating surface.

(b) Attach the lifting fixture to the suction cover and find the proper balance point.

(c) Apply Loctite 515 and an o-ring (when applicable) per recommended procedures.

(d) Install four guide pins to help align the suction cover. Make sure the scribe marks between the 2nd stage cover and 1st stage cover are lined up before final tightening of bolts.

(e) Install bolts and torque to 120-165 lb-ft.

Figure 30

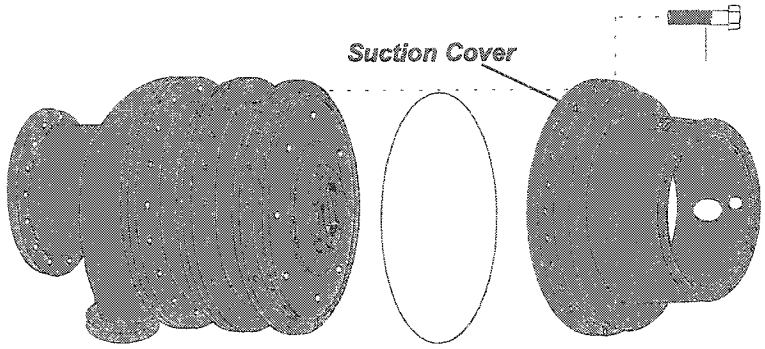

24 Impeller Nose Seal Installation. (see Figure 31)

(a) Thoroughly clean the nose seal to remove any debris or loose chips from the labyrinth teeth.

(b) Use the original bolts and new locking tab washers.

(c) Using a feeler gauge, center the seal around the nose of the impeller. The proper clearance can be found in Table 5.

(d) With the seal set properly, tighten the bolts to 20-27 lb-ft. Recheck the seal clearance.

(e) Rotate the shaft to ensure it rotates freely.

Figure 31

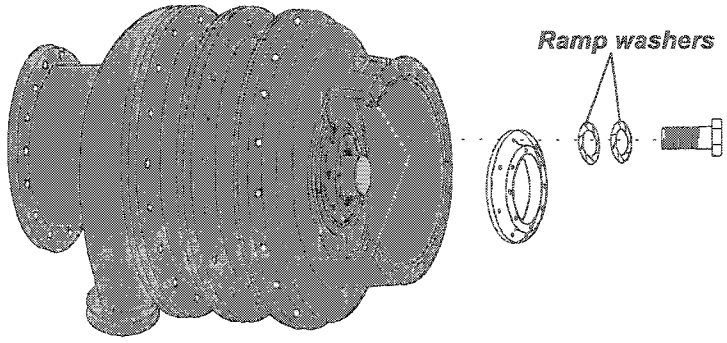

25 1st Stage Vane Assembly Installation.

(a) Thoroughly clean the vane assembly and check to ensure that the vanes move freely. Oil the vane bearings before installing.

(b) Use the special lifting tool described in the disassembly section to lift the vane assembly. Once the vanes are positioned in the housing, secure the vane assembly using a piece of L-angle and two bolts with washers. See Figure 32.

Figure 32

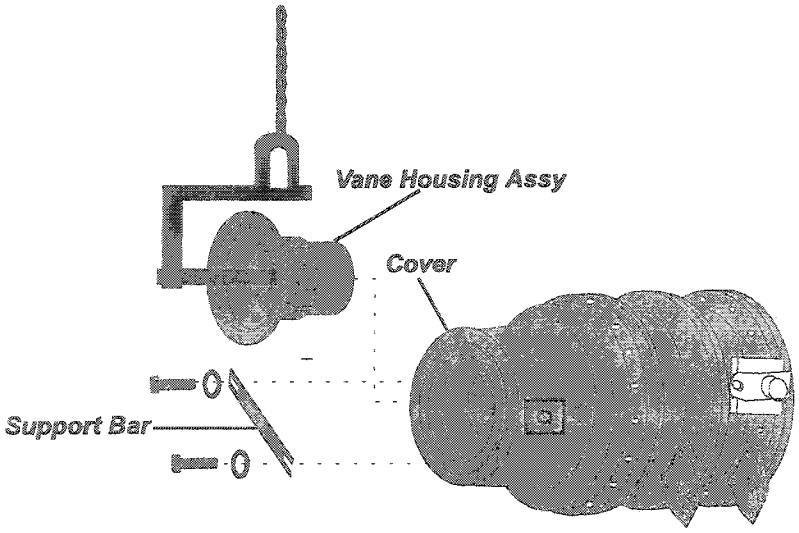

(c) Use three allen head setscrews to secure the inlet vane in the housing. Tighten the setscrews. See Figure 33.

(d) Install the 1st stage vane operator tang assembly using the marks placed on the operator lever and suction cover (with vanes closed) during disassembly to position the tang assembly (see Figure 33). It may be advisable to consider rebuilding of the operator using new o-rings, nylon bushings, and lip seal if applicable to eliminate a leak potential. The 1/8" NPT pipe plug should be removed and compressor oil poured into the area between the two internal o-rings to lubricate them. Replace the plug (see Figure 34.

Figure 33

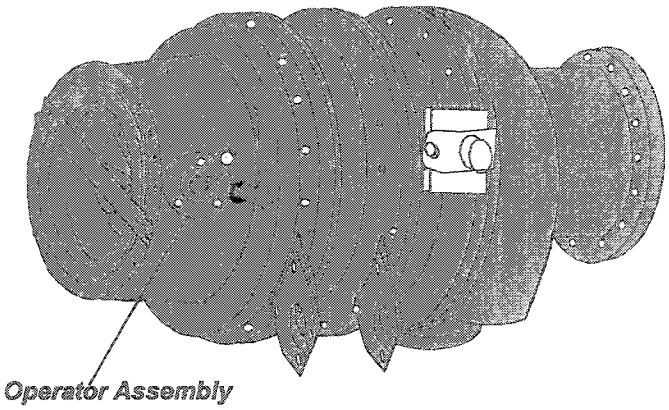

Figure 34

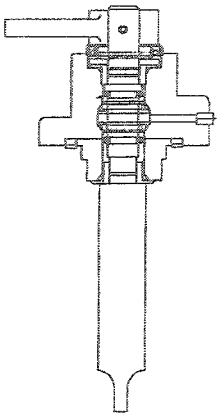

(e) Torque the tang operator mounting bolts to 14 lb-ft.

(f) Remove the L-angle and bolts holding the vane assembly in the suction cover.

26 Air Run of Compressor For Balance.

(a) Run the compressor on air with the suction elbow off.

(b) Measure the vibration levels as indicated in *CVHE-SB-18* (latest revision) and, when required, trim balance the compressor to ensure proper balance.

27 Suction Elbow Installation.

(a) Clean the sealing surfaces on the suction elbow, evaporator, and suction cover flanges. The suction elbow must be properly insulated to prevent moisture from condensing. Insulation that was improperly applied or damaged may allow moisture to collect between the flanges and in the bolt holes. It may be necessary to use a bottoming tap to clean up the bolt holes before installing the elbow.

(b) Apply Loctite 515 and o-ring (when applicable) per recommended procedures. The lower flange at the evaporator requires Loctite. The upper suction elbow connection at the compressor suction cover should be installed with *no* sealant on the o-ring and a back-up Gore-Tex tape installed between the o-ring groove and the inner suction connection opening in the elbow. After installing the Gore-Tex tape, apply a small amount of petroleum jelly to the o-ring to help hold it in place while installing the suction elbow. See General Service Bulletin *CTV-SB-66* (latest revision).

(c) Using a sling lift the suction elbow into position. Install bolts by hand making sure the flanges at the suction cover are square with the cover. ***NOTE:*** *All bolts should be coated with an anti-seize compound to help prevent rust.* Snug up the bolts slightly.

(d) Torque the bolts in the elbow to 120-165 lb-ft following the pattern shown in Figure 35. Ensure the elbow flange pulls up square to the suction cover and does not place a strain on the cover.

⚠ CAUTION

Compressor Damage!

Verify proper elbow flange fit. Failure to maintain proper suction elbow fit up can cause vibration problems or seal-to-impeller interference and possible damage to the impellers and compressor.

Figure 35

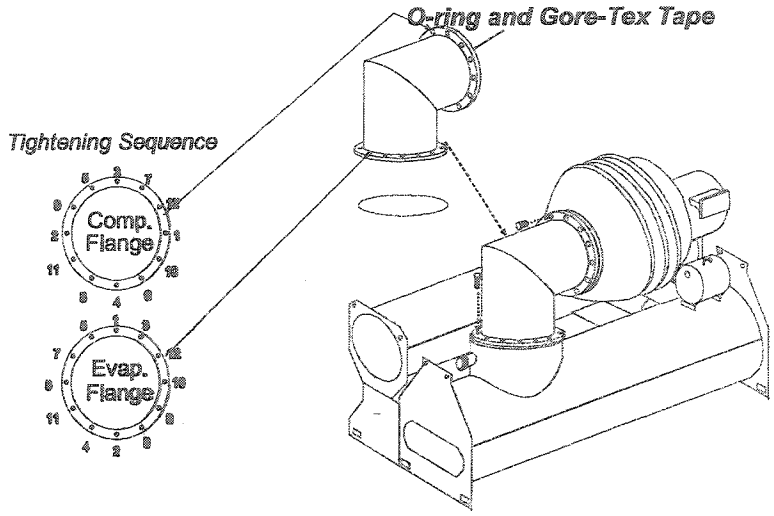

(e) The compressor should be run on air with the suction elbow installed. Refer to General Service Bulletin *CVHE-SB-18 (latest revision).*

(f) See Step 30 when the unit-mounted starter is used.

28 Economizer Installation.

(a) Clean the flanges on the economizer, evaporator, and the condenser outlet pipe. The bolts holes on the evaporator flange may need to be cleaned up using a bottoming tap to remove rust. Some of the early vintage CVHEs with unit sizes larger than CVHE056 used a four bolt flange at the evaporator for the larger size units. This was changed on later designs to eight bolts to ensure a better seal. It may be advisable to drill and tap the four additional holes in the evaporator flanges of early-production chillers to prevent leaks. The replacement gasket will have the four additional holes.

(b) Using a sling on either end of the economizer, move the economizer into position. See Figure 36.

Figure 36

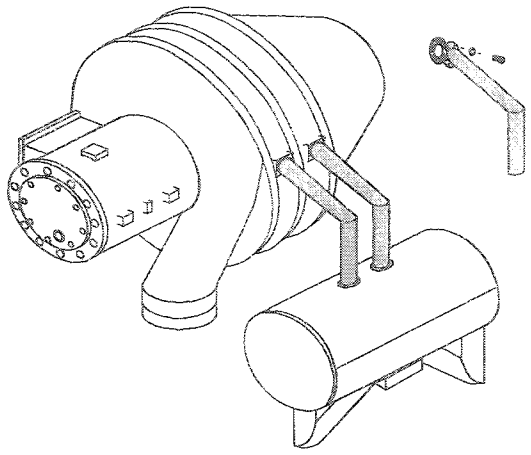

(c) Coat the threads of the bolts for the evaporator flange with an anti-seize compound.

(d) Tighten the bolts to 14 -16 lb-ft. See Figure 37.

Figure 37

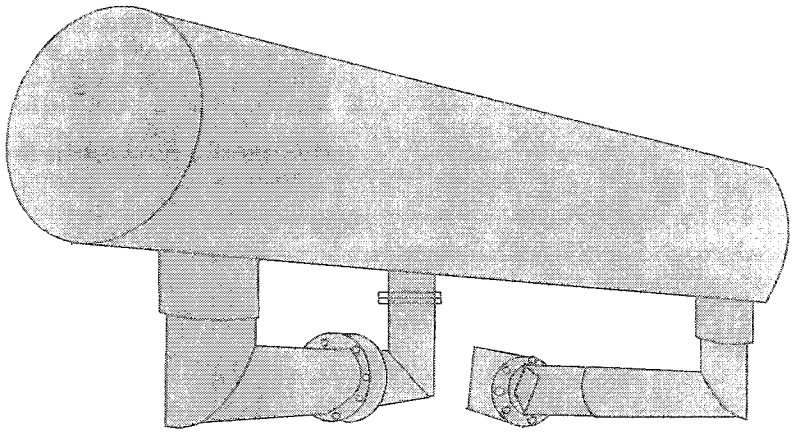

29 Inlet Vane Linkage Installation.

(a) Attach the linkage assembly brackets to the compressor casings. The outline of the mounting brackets should have been scribed on the casings to align the brackets in their original position.

IMPORTANT! Maintaining the proper vane schedule between stages is important. Misadjustment of the vanes can cause gas flow turbulence at certain compressor load points resulting in noise and vibration. This problem is usually an indication that the final stage vane assembly has lagged behind the 1st stage vane position. Adjustment of the vane assembly brackets on the compressor casings or length of linkage rods may resolve this condition.

(b) Reconnect the drive rods to the vane operator arms. See Figure 38.

Figure 38

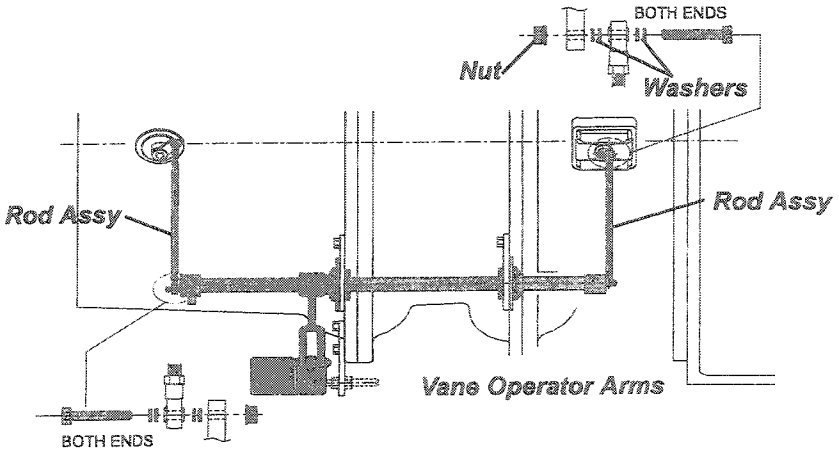

(c) Open and close the vanes to ensure they operate freely.

30 Unit Mounted Starter Installation.

(a) Clean off the flange on the motor housing and transition piece between the starter and motor housing.

(b) Use a new gasket between the transition piece that bolts to the motor terminal board casting flange. See Figure 39.

Figure 39

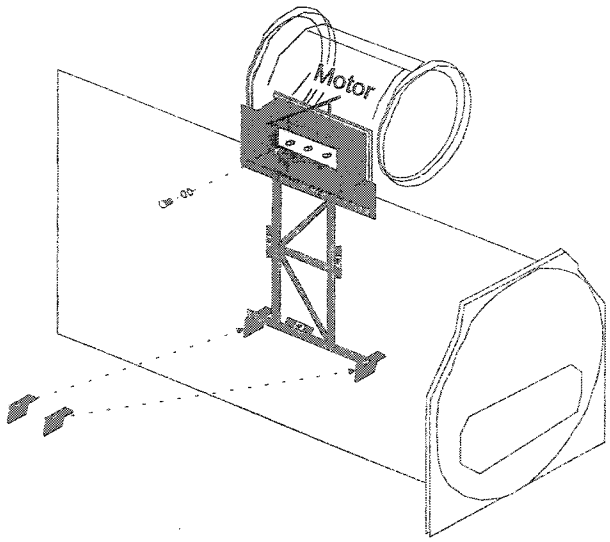

(c) Lift the unit mounted starter into position using the eye bolts in top of starter.

(d) Bolt the starter to the motor housing flange and the lower evaporator mounting brackets.

(e) Re-attach the motor leads to the motor terminal studs. The leads and motor studs should have been marked during disassembly. Torque clamp connectors to 27 lb-ft.

31 Motor Cooling Lines.

(a) Clean the motor cooling line flanges and motor housing.

(b) Install the motor cooling orifice between the flange and motor housing with a gasket on either side of the orifice. The motor cooling orifice is a flat piece of steel with a stamped hole in the center of a specific diameter matching the motor size and horsepower.

(c) Install the drain lines using new gaskets.

(d) Tighten the bolts.

32 Oil Supply Line Orifice.

(a) The oil supply line for the ball bearing end has an orifice at the motor housing. The orifice is threaded into the motor end bell. The orifice limits the amount of oil that is supplied to the ball bearing. Installing the oil supply line without the proper orifice may lead to excessive oil flow through the bearing cavity and possible oil loss.

Table 2
Compressor Component Weights (lb.)

Unit Type	Unit Comp Size 60HZ	Unit Comp Size 50HZ	Economizer (Std. Less free cooling)	Suction Elbow	1st Stage Inlet Vane	1st Stage Suction Cover	Impellers All Stages	2nd Stage Alum. Vane Plate	2nd Stage Casing	3rd Stage Alum. Vane Plate	2nd or 3rd Stage Inlet Vanes & Plate	3rd Stage Casing	Steel Volute Diffuser Plate	Discharge Volute	Complete Compressor Including Motor
CVHE	016-020	016-020	300	203	200	715	37	90	820	90	70	768	162	800	5665
CVHE	023-032 230-320	023-320 190-270	385	266	240	1008	42	115	719	115	76	742	162	793	6880
CVHE	036-050 360-500	036-050 300-420	700	310	270	1050	42	130	875	130	82	775	162	910	7300
CVHE	056-080 560-800	056-080 470-660	840	494	300	1145	47	140	1132	140	88	880	232	1110	9175
CVHE	089-125 890-1250	089-125 740-1040	1230 lbs	706	350	1285	47	150	1257	150	93	1200	346	1608	11125
CVHG	N/A	480-565			311	1740		190	1840	190		1840	356	1418	
CVHG	N/A	670-780			408	1690		190	1990	190		1920	309	1430	
CVHG	N/A	920-1067			425	1718		190	2010	190		1920	309	1820	
CDHG*	N/A	1250			See Compressor Size CVHG 670										
CDHG*	N/A	1750			See Compressor Size CVHG 920										
CDHG*	N/A	2150			See Compressor Size CVHG 1067										

Table 3
Bolt Torques (Metal to Metal Flanges) Grade 5 Bolt

Size	Thread TPI/Class	Torque (lb.-ft.)*	
		Minimum	Maximum
¼"	UNC 20	5	7
5/16"	UNC 18	11	15
3/8"	UNC 16	20	27
½"	UNC 13	55	75
5/8"	UNC 11	120.	165
3/4"	UNC 10	200	280
1"	UNC 8	400	550

Table 4
Centravac Motor Weights

Unit Type	Unit/Compressor Size (60 Hz.)	Unit/Compressor Size (50 Hz.)	Low Voltage (208-600 Volts)	High Voltage (2300-6600 Volts)
CVHE	016-020 N/A	016-020 N/A	1568 lb. 711 kg.	N/A N/A
CVHE	023-032 230-320	023-032 190-270	1861 lb. 844 kg.	2641 lb. 1198 kg.
CVHE	036-050 360-500	036-050 300-420	2730 lb. 1238 kg.	2898 lb. 1315 kg.
CVHE	056-080 560-800	056-080 470-660	3554 lb. 1612 kg.	3991 lb. 1810 kg.
CVHE	089-125 890-1250	089-125 740-1040	4464 lb. 2025 kg.	4598 lb. 2086 kg.
CVHG	N/A	480-565	3560 lb. 1615 kg.	3968 lb. 1800 kg.
CVHG	N/A	670-780	3845 lb. 1744 kg.	4359 lb. 1977 kg.
CVHG	N/A	920-1067	4562 lb. 2069 kg.	4696 lb. 2130 kg.
CDHG	N/A	1250	3677 lb. 1668 kg.	3952 lb. 1793 kg.
CDHG	N/A	1750	3845 lb. 1744 kg.	4359 lb. 1977 kg.
CDHG	N/A	2150	4562 lb. 2069 kg.	4696 lb. 2130 kg.

Note: Weights shown are for the largest motor available in the compressor size.

Table 5
CVHE/CVHG Compressor Clearances

Model			1st Stage Impeller Nose Seal (in.)	2nd Stage Impeller Nose Seal (in.)	3rd Stage Impeller Nose Seal (in.)	Shaft Runout Max. TIR (in.)	Impeller Nose Runout Max. TIR (in.)		Interstage Seal to Shaft Spacer	Bearing Oil Seal to Shaft+ (in.)
CVHE										
50-60 Hz.	60 Hz.	50 Hz.	Radial Clearance	Radial Clearance	Radial Clearance		Cast*	Fab.*	Radial Clearance	See Note +
013	130	N/A	.0195-.0295	.0165-.0240	.0165-.0240	.0012	.0035	.0050	.0180-.0240	.0040-.0070
014	140	N/A	.0195-.0295	.0165-.0240	.0165-.0240	.0012	.0035	.0050	.0180-.0240	.0040-.0070
015&016	160	N/A	.0195-.0295	.0195-.0295	.0165-.0240	.0012	.0035	.0050	.0180-.0240	.0040-.0070
018	180	N/A	.0195-.0295	.0195-.0295	.0165-.0240	.0012	.0035	.0050	.0180-.0240	.0040-.0070
020	200	N/A	.0195-.0295	.0195-.0295	.0165-.0240	.0012	.0035	.0050	.0180-.0240	.0040-.0070
022	N/A	N/A	.0195-.0295	.0195-.0295	.0195-.0295	.0012	.0035	.0050	.0180-.0240	.0040-.0070
023	230	190	.0220-.0330	.0195-.0295	.0195-.0295	.0012	.0035	.0050	.0180-.0240	.0040-.0070
025	250	210	.0220-.0330	.0195-.0295	.0195-.0295	.0012	.0035	.0050	.0180-.0240	.0040-.0070
028	280	240	.0220-.0330	.0195-.0295	.0195-.0295	.0012	.0035	.0050	.0180-.0240	.0040-.0070
032	320	270	.0220-.0330	.0195-.0295	.0195-.0295	.0012	.0035	.0050	.0180-.0240	.0040-.0070
035&036	360	300	.0245-.0365	.0220-.0330	.0195-.0295	.0012	.0035	.0050	.0180-.0240	.0040-.0070
040	400	330	.0245-.0365	.0220-.0330	.0195-.0295	.0012	.0035	.0050	.0180-.0240	.0040-.0070
045	450	370	.0245-.0365	.0220-.0330	.0195-.0295	.0012	.0035	.0050	.0180-.0240	.0040-.0070
049	N/A	N/A	.0245-.0365	.0220-.0330	.0220-.0330	.0012	.0035	.0050	.0180-.0240	.0040-.0070
050	500	420	.0245-.0365	.0220-.0330	.0220-.0330	.0012	.0035	.0050	.0180-.0240	.0040-.0070
056	560	470	.0285-.0430	.0245-.0365	.0220-.0330	.0012	.0035	.0050	.0180-.0240	.0040-.0070
063	630	530	.0285-.0430	.0245-.0365	.0220-.0330	.0012	.0035	.0050	.0180-.0240	.0040-.0070
071	710	590	.0285-.0430	.0245-.0365	.0220-.0330	.0012	.0035	.0050	.0180-.0240	.0040-.0070
079	N/A	N/A	.0285-.0430	.0245-.0365	.0245-.0365	.0012	.0035	.0050	.0180-.0240	.0040-.0070
080	800	660	.0285-.0430	.0245-.0365	.0245-.0365	.0012	.0035	.0050	.0180-.0240	.0040-.0070
089	890	740	.0310-.0460	.0285-.0430	.0245-.0365	.0012	.0035	.0050	.0180-.0240	.0040-.0070
090	900	N/A	.0310-.0460	.0285-.0430	.0245-.0365	.0012	.0035	.0050	.0180-.0240	.0040-.0070
100&101	1000	830	.0310-.0460	.0285-.0430	.0245-.0365	.0012	.0035	.0050	.0180-.0240	.0040-.0070
112&113	1120	930	.0310-.0460	.0285-.0430	.0245-.0365	.0012	.0035	.0050	.0180-.0240	.0040-.0070
125	1250	1040	.0310-.0460	.0285-.0430	.0285-.0430	.0012	.0035	.0050	.0180-.0240	.0040-.0070
140	N/A	N/A	.0310-.0460	.0285-.0430	.0285-.0430	.0012	.0035	.0050	.0180-.0240	.0040-.0070
CVHG										
50 Hz.										
All Sizes			.0160-.0210	.0160-.0210	.0160-.0210	.0012	.0035	.0050	.0100-.0160	.0040-.0070

Compressor/Motor Record Sheet

Job Name:	*Disassembly:*	*CVHE:*
Technician:	*Assembly:*	*CVHF:*
Date:	*City:*	*CVHG:*
Unit Model:	*Serial #:*	

(in.)	*1st Stage Impeller Seal Clearance*
(in.)	*1st Stage Impeller Nose Runout*
(in.)	*1st Stage Impeller OD. to Diffuser Clearance*
(in.)	*Shaft Runout (TIR)*
(in.)	*1st Stage Spacer Seal Clearance*
(in.)	*2nd Stage Impeller Seal Clearance*
(in.)	*2nd Stage Impeller Nose Runout*
(in.)	*2nd Stage Impeller OD. To Diffuser Clearance*
(in.)	*2nd Stage Spacer Seal Clearance*
(in.)	*3rd Stage Impeller Seal Clearance*
(in.)	*3rd Stage Impeller Nose Runout*
(in.)	*3rd Stage Impeller OD. to Diffuser Clearance*
(in.) 12:00	*Oil Seal Clearance (Record 4 Places)*
(in.) 6:00	
(in.) 3:00	
(in.) 9:00	

Air-Run (Elbow Off)	*(in./sec. H)*	*(in./sec. V)*	*(in./sec. A)*
Air-Run (Elbow On)	*(in./sec. H)*	*(in./sec. V)*	*(in./sec. A)*
Freon-Run	*(in./sec. H)*	*(in./sec. V)*	*(in./sec. A)*

Comments:

Centravac General Service Literature

Figure 40
Compressor Cross-Section View

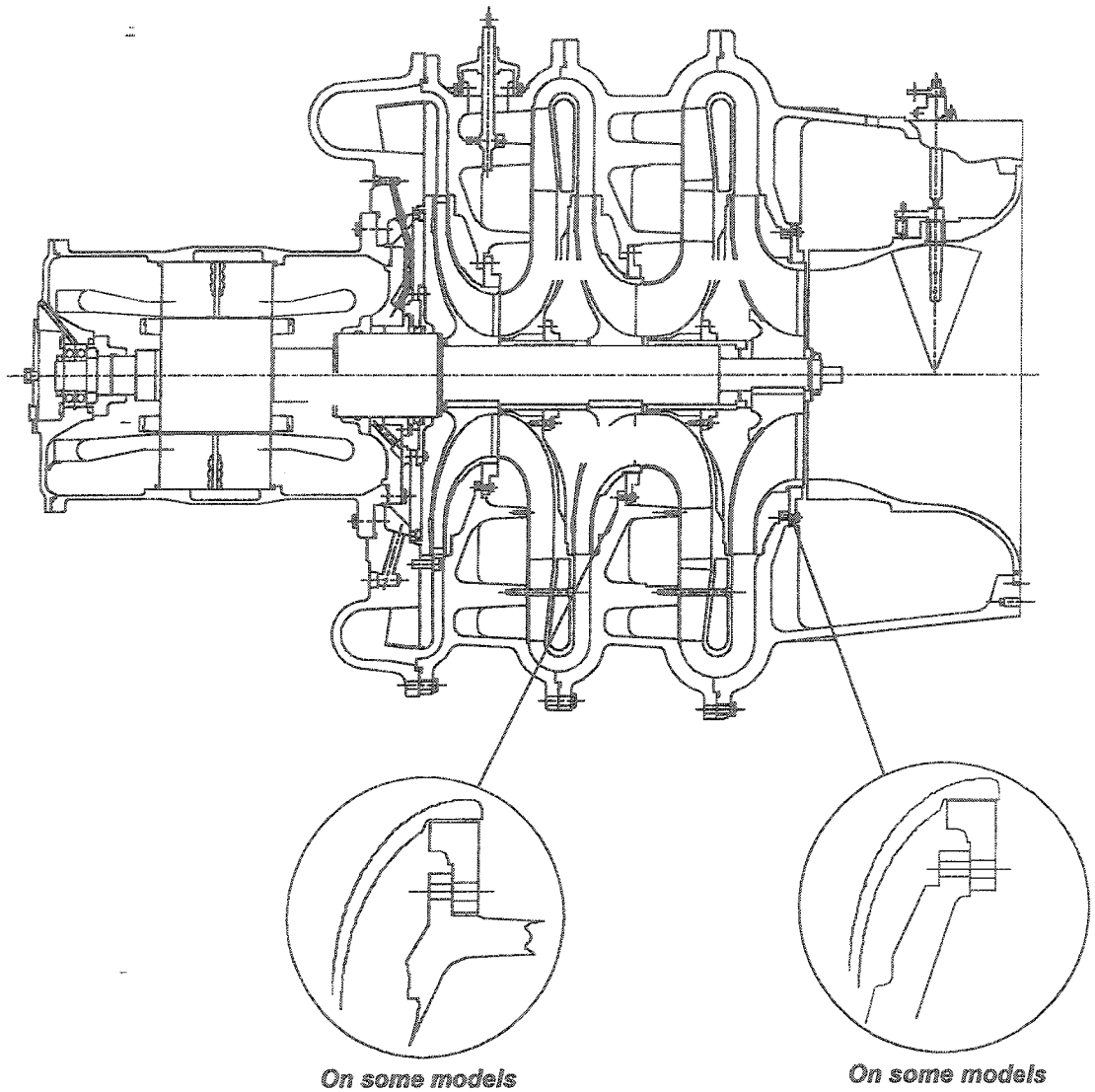

CenTraVac General Service Literature

CenTraVac General Service Literature

CTVH-GCO-03-EN

CVHF Compressor Disassembly (Including):

- Economizer Removal
- Suction Elbow Removal
- Compressor Disassembly
- Unit Mounted Starter Removal
- Motor Removal
- Discharge Volute Removal

CVHF and CDHF Duplex Unit

Compressor Sizes 350 through 1280 Ton

This section describes disassembly (including economizer, suction elbow, unit mounted starter, motor, and discharge volute removal) procedures for the model CVHF CenTraVac compressor assemblies. The same information applies to the compressors for the CDHF duplex units. For disassembly and re-assembly procedures for the motor, see CenTraVac Service Literature Section *CTVH-GMO-01*.The procedures covered in this section may be used for the CVHF and CDHF compressor sizes 350 through 1280 tons. For information on the CVHE and CVHG compressors, see CenTraVac Literature Sections *CTVH-GCO-01& 02.*

For information on the extended capacity compressor sizes CVHF 1470 and 1720 see CenTraVac literature sections *CTVH-GCO-05 &06.* Always check the appropriate table to obtain weights and tolerances for a particular type or size of compressor.

Warning and Cautions

WARNINGs and CAUTIONs appear at appropriate sections throughout this manual. Read these carefully.

WARNING: indicates a potentially hazardous situation which, if not avoided, could result in death or serious injury.

CAUTION: indicates a potentially hazardous situation which, if not avoided, may result in minor or moderate injury.

CAUTION: may also be used to alert the reader to a situation that could result in equipment or property-only damage.

Disassembly.

Refer to CenTraVac General Literature Section CTVH-GMS-01 for details on the special lifting fixtures for removing the first stage inlet vane assembly and handling the compressor suction cover and casing components. The tools shown can be fabricated locally using the drawings found in the special tools section. The Trane Company assumes no responsibility for the use of materials that do not meet the required specifications, or for improper or faulty manufacturing, assembly or use of these lifting fixtures. Never exceed the maximum safe lifting capacity of the fixture.

IMPORTANT!: Some of the lifting tools built for the CVHF compressor components have a maximum lifting capacity of 1300 lb. The tool maximum weight capacity is stamped on the tool. Some CVHF castings exceed this rating and the lifting tool given in Literature Section CTVH-GMS-01 must be used.

⚠ WARNING
Heavy Objects!
Use lifting and rigging equipment that is rated to handle the maximum weights. Improper use of lifting fixtures may result in death or serious injury.

Follow all proper procedures when handling large compressor components. Use lifting and rigging equipment that is rated to handle the maximum weights of the pieces found inTable 2 in the back of this literature section. It is recommended that all lifting devices have a capacity rating no less than 100% of the weights shown. Carefully inspect lifting equipment to ensure it is in good condition and has been certified for continued use at proper intervals.

1. It may be advisable to obtain vibration readings for reference purposes prior to disassembly. See General Service Bulletin *CVHE-SB-18* (latest revision) for information on allowable vibration limits.

⚠ WARNING
Hazardous Voltage!
Disconnect all electrical power, including remote disconnects, before servicing. Follow proper lockout/tagout procedures to ensure the power cannot be inadvertently energized. Failure to disconnect power before servicing could result in death or serious injury.

IMPORTANT!: Be sure to properly lock out ALL potentially hazardous energy sources before servicing is done on the equipment. Follow all proper refrigerant handling procedures. Before disassembly, evacuate the unit to 2.5 mm vacuum and bring the unit back up to atmospheric pressure using dry nitrogen.

2 Mark and disconnect all power leads to the inlet vane actuator motor. Remove the conduit assembly from the actuator motor.

3 Remove the inlet vane actuator linkages.

(a) Disconnect the universal joints at the inlet vane operator levers.

(b) Before removing the vane drive support assemblies, mark the compressor castings by scribing a line around the brackets so they may be reassembled in the same relative positions. This will help ensure that the inlet vane linkages maintain their proper coordination between the stages.

(c) Remove the 5/8"-11 x 2"hex head bolts securing the vane drive support assemblies to the compressor castings. See Figure 1.

Figure 1

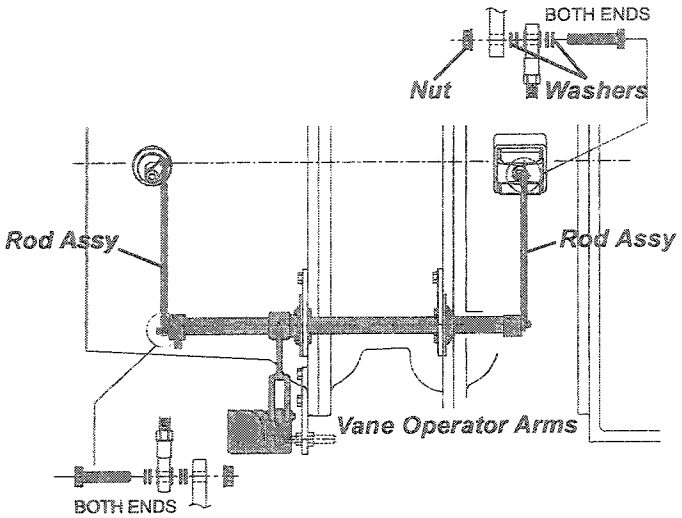

(d) Remove the cotter pin securing the vane operator stud.

(e) Slide the vane motor off the stud and remove the entire vane linkage assembly and vane motor from the unit.

(f) Remove the linkage assembly from the vane motor by removing the cotter pin or bolt and nut. The vane motor is now free and can be removed.

⚠ CAUTION

Component Alignment!

Before disassembling the compressor, scribe lines across the flanges on the exterior edges of all compressor castings in two locations, 180 degrees apart. This must be done so

that all components can be re-aligned during re-assembly. Failure to complete this step may result in misalignment of the suction elbow upon re-assembly and possible distortion of the compressor. This can cause vibration problems or seal-to-impeller interference and possible damage to the impellers and compressor.

⚠ CAUTION

Component Alignment!

The following two paragraphs provide instructions to maintain proper component alignment and fit. Make sure the compressor casings are doweled or scribed and the discharge volute is doweled. Failure to maintain proper alignment may result in compressor damage. Failure to maintain proper suction elbow fit up can cause vibration problems or seal-to-impeller interference and possible damage to the impellers and compressor.

4 Before proceeding further, check to make sure the discharge volute has dowel pins in the flange at the condenser and the compressor foot where it mounts on the evaporator support bracket. These pins are standard on all newer units and will be required if the discharge volute or entire compressor will be removed from the shells. The alignment of the compressor/motor assembly is determined by the position of the discharge volute. A shift in volute position at either the discharge flange or the compressor foot can change the suction elbow to compressor alignment. **Failure to maintain proper suction elbow fit up** can cause vibration problems or seal-to-impeller interference and possible damage to**the impellers and compressor.** Dowel pins should be present in the discharge flange and compressor foot. Units ordered for field disassembly (compressor removal) may have the motor, interstage casings and suction cover doweled as well as the discharge flange and foot.

For additional information on compressor doweling see *General Service Bulletin CVHE-SB-10* (latest revision).

5 If the entire compressor or the volute will need to be removed from the shells, the dowel pins at the discharge flange and foot will have to be removed. First remove the threaded nut on the exposed end of the dowel pin. Then slip washers or a bushing over the pin. Reinstall the nut. As the nut is tightened, the pin will be pulled out of place. The dowel pins allow for precise assembly of the compressor components in their original position.

Note: It is not necessary to dowel all compressor casings for overhauls when properly scribed as detailed above.

IMPORTANT!: Make sure the evaporator and condenser inlet and outlet water valves have been closed (no water flow!) and the evaporator and condenser water

boxes have been completely drained. Failure to prevent water flow through the unit during repairs could cause severe rusting inside the shells. In humid environments it may be advisable to place a portable light or trouble light (100 -300 Watt) in the evaporator and condenser if necessary to provide enough heat to prevent moisture from condensing in the unit during repairs. In excessively humid environments, consider the use of a nitrogen purge to help prevent corrosion.

6 Remove the economizer to allow for compressor volute clearance.

(a) Some CVHE and CVHG units will require cutting the drain line that returns motor cooling liquid to the economizer. Sand the line to remove paint then cut with a tubing cutter. Do not use a hacksaw to cut the line. *Always use a tubing cutter to avoid* introducing copper chips (debris) into the unit.

(b) On smaller units, a floor jack may be placed under the economizer sump.

(c) For larger units it may be advisable to block the economizer and piping when the bolts are removed and then use slings (in the choke configuration) at each end to lift the economizer. See Table 2 for weights of economizers. Make sure the proper balance point of the economizer is found, to prevent it from rotating as it is lifted. See Figure 2 for proper sling use.

Note: The lifting capacity of a sling is reduced when the load angle is less than 90 °. See Table 1 for load factor values. For angles less than 90°, multiply the load factor by the nominal sling lifting capacity to determine the allowed lift weight.

Figure 2

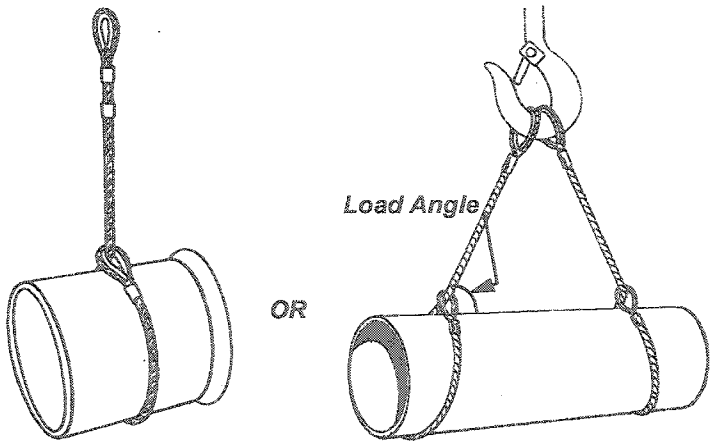

NOTE: Use slings at EACH end when lifting.

Table 1

Load Angle (°)	Factor	Load Angle (°)	Factor
90	1.000	50	0.7660
85	0.9962	45	0.7071
80	0.9848	40	0.6428
75	0.9659	35	0.5736
70	0.9397	30	0.5000
65	0.9063	25	0.4226
60	0.8660	20	0.3420
55	0.8192	15	0.2589

(d) Carefully slide the economizer away from the shells.

(e) Lightly oil all flanges with compressor oil. Cover all openings with plastic and seal with duct tape to prevent debris from entering the economizer.

(f) Remove the orifice assemblies and mark them properly. Oil the flanges on the condenser liquid line and the evaporator liquid inlet to prevent rusting. Cover the openings with plastic and duct tape to prevent entry of debris.

7 Remove the Suction Elbow.

(a) Remove the bolts from the suction elbow flanges at the evaporator and compressor.

(b) Place a sling in the choke configuration around the suction elbow. Position the sling so the elbow balances properly as it is lifted. *Do NOT use the weld nut on the suction elbow for lifting.* See Table 2 for the weight of the suction elbow.

(c) Clean and lightly oil the suction elbow flanges to prevent rusting and place the elbow on wooden blocks to protect the face of flange. Remove the o-ring, then thoroughly clean the groove in the flange on the evaporator. Lightly oil the flange on the evaporator. Cover the opening with plywood to protect the flange and prevent debris from entering the evaporator during repairs.

IMPORTANT!: During the compressor disassembly process, you must mark all components before removing them. Mark the face of components with a description or location (e.g.1st stage impeller seal) and the top(12 o'clock) mounting position of all seals, impellers, spacers, casings, plates etc. so they may be re-installed in the same position. This will be important in maintaining the proper balance and alignment of the rotating components during re-assembly. A permanent ink marker or a scribe may be used to mark the components.

8 Remove the first stage inlet vane assembly.

(a) Loosen and remove the 5/16"-18 x 1"hex head bolts and lockwashers securing the first stage vane operator assembly to the suction cover. See Figure 3. Mark the operator lever and the suction cover casing with the vanes in the closed position. Remove the vane operator assembly.

Figure 3

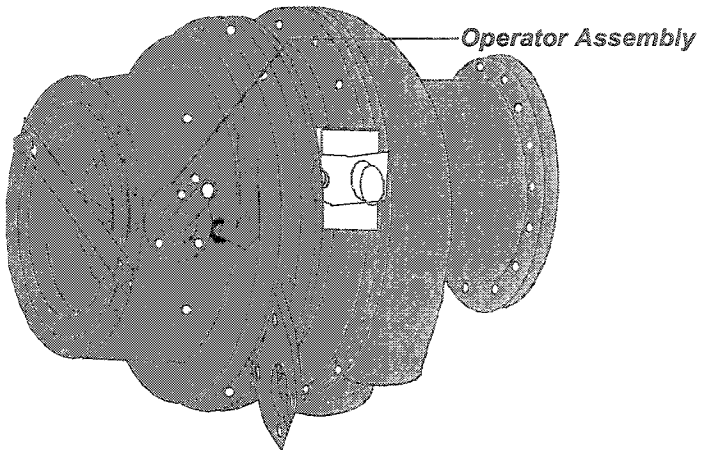

(b) Use a length of L-channel extending across the width of the inlet vanes and two bolts with washers in the suction cover flange to hold the inlet vane assembly in the cover.

– Remove the three 5/16"-18 x 3/8" countersunk set screws in the suction cover holding the inlet vane assembly in place. See Figure 4.

Figure 4

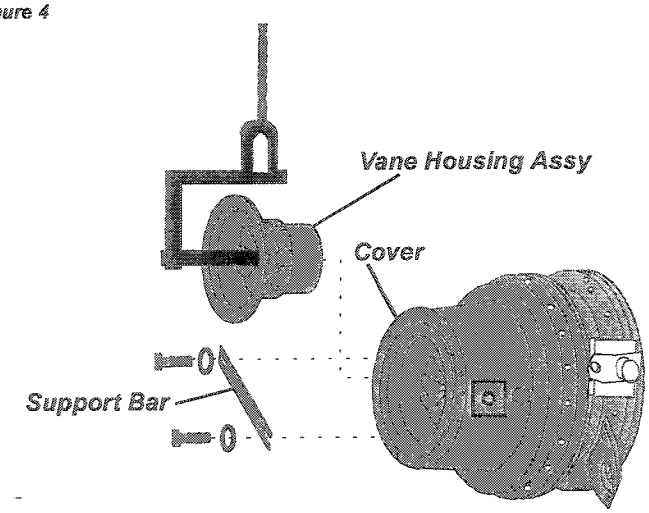

(c) Using the vane lifting tool shown in Figure 4, lift up slightly on the vane assembly. Remove the L-channel holding it in place and pull the vane assembly away from the suction cover. The weight of the vane assembly is given in Table 2.

*IMPORTANT!: Immediately spray a rust-preventive penetrating oil into the needle bearings in the inlet vane housing, while manually opening and closing the vanes. Thoroughly oil the bearings to minimize the risk of rust forming in the bearings, which could lead to vane binding. **Anytime a unit will be open for major repairs, it** is recommended the needle bearings in the vane assembly be replaced.*

9 When applicable, sand the paint from the oil sump vent line to the suction cover and cut the pipe using a tubing cutter. Do not use a hacksaw to cut the line. Always use a tubing cutter to avoid introducing copper chips (debris) into the unit.

10 Remove the 1/4" oil drain line at the bottom of the suction cover.

11 Measure and record the clearance between the 1st stage seal impeller labyrinth and impeller nose using a feeler gauge. If so equipped, bend the tabwasher tab back allowing the hex head bolts that secure the seal to be removed. The tabwashers are no longer used in production and should be replaced by ramp washers during re-assembly. Remove the seal and store properly along with the retaining bolts. See Figure 5.

Figure 5

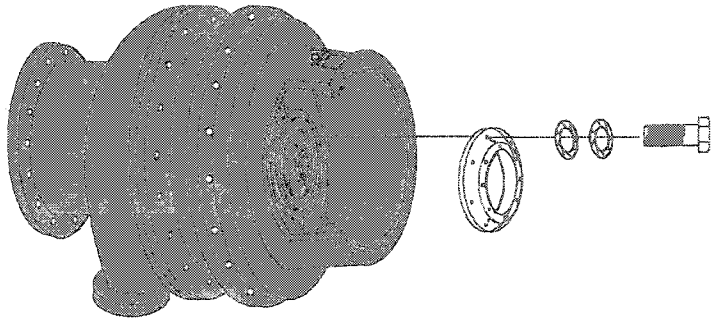

IMPORTANT: Mark this seal carefully. On some size units this seal is mounted in a reverse position. Installing it incorrectly could result in improper venting of the suction cover and may lead to oil loss. Do not mix the bolts with those of other seals, as the bolt lengths may vary.

12 Remove the suction cover and suction cover o-ring.

(a) Remove two of the 5/8" bolts from the suction cover, 180 degrees apart on the horizontal centerline (3 and 9 o'clock position) and insert 6" long guide pins.

(b) Attach a casting lifting fixture to the face of the suction cover flange.

(c) Remove a bolt near the bottom of the suction cover and one to the side of the lifting fixture and insert 6" long 5/8" stop bolts with heads to limit movement of the cover until a proper balance point is obtained. Attach an overhead hoist of sufficient lifting capacity to the lifting plate. See Table 2 for the weight of the suction cover. Remove the remaining bolts (leaving in place the 6" long guide pins and 6" long stop bolts) and pick up slightly on cover. It may be necessary to use jacking bolts to push the cover away from the casing. If necessary, move the pick-up point on the lifting tool until the cover is balanced. Once the cover is balanced properly with the lifting tool, remove the stop bolts at the top and bottom of the cover and remove the suction cover. Oil the cover flanges lightly and store it properly to prevent rust or damage to the sealing surfaces. See Figure 6. Remove the guide pins.

Figure 6

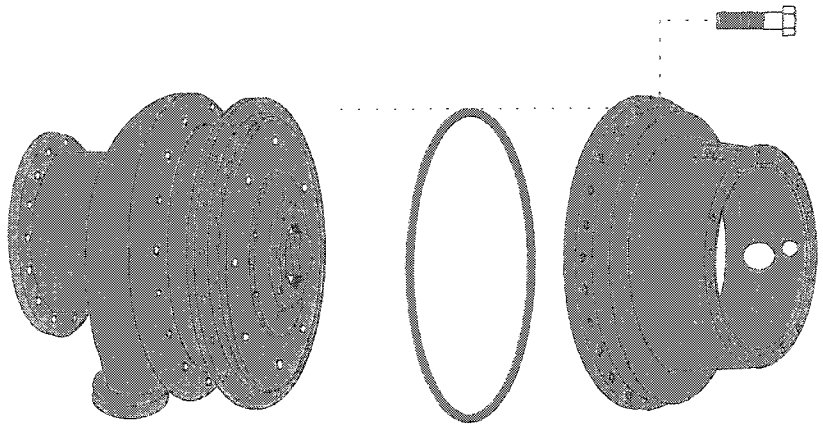

13 Measure and record the total indicated runout (TIR) on the nose of the 1st stage impeller. Use a dial indicator with a magnetic base for measuring runout. See Figure 7.

Figure 7

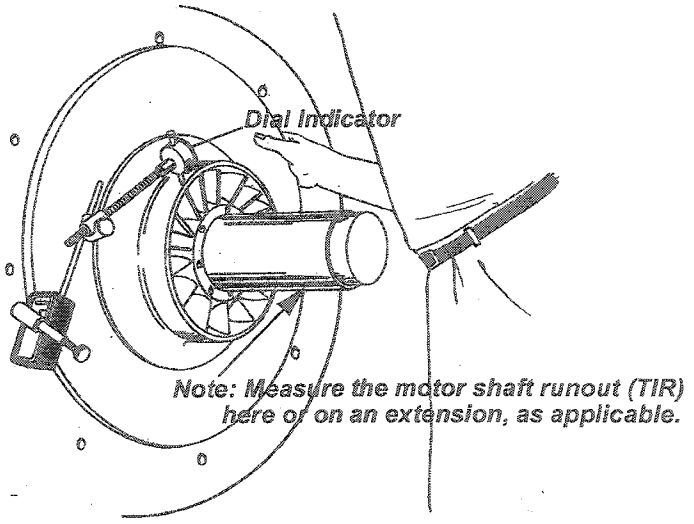

14 Measure and record the total indicated runout (TIR) at the end of the shaft. Some motor sizes have an extension on the end of the shaft where the runout can be measured without having to remove the impeller locknut. Many motors will require removal of the locknut and 1st stage impeller to provide a surface for measuring runout. The allowable TIR is .0012".See note in Figure 7.

15 If it is anticipated that the present compressor seals along with other components will be used during re-assembly, it is advisable to record clearances and runout measurements.

The form at the back of this section can be used to record the tolerances. The recommended tolerances can be found in Table 3.

16 Remove the impeller locknut.

Note: Some units are equipped with a standard locknut, while some units have a balance style locknut. The balance style locknut has small tapped holes in the face for the purpose of installing balancing screws and weights.

IMPORTANT!: When the unit has a balance style locknut with weights attached, and the motor and all rotating compressor components will be re-used, it is necessary to mark all rotating components such as the locknut, spacers, impellers and motor shaft. This is required to ensure the components can be re-assembled in the exact position as they were removed. Failure to mark all components and reassemble them properly could lead to an out of balance condition and require the assembly to be trim balanced. If the motor/rotor or other rotating components located on the shaft will be replaced, it is not necessary to mark all components. Whenever replacing individual rotating components with new ones, the balance weights from the locknut should be removed.

All major rotating components are individually balanced to specification before the compressor is assembled. Even though each major rotating component in the compressor is individually balanced, a small percentage of the compressors assembled in the factory and in the field may be beyond the allowable limit for unbalance. When this occurs, the compressor will need to be trim balanced in the field after re-assembly, using a balance style locknut and weights. Refer to Service Bulletin *CVHE-SB-18* (latest revision) for information on allowable vibration limits.

IMPORTANT!: When all components will be re-used during re-assembly, mark the position of the locknut relative to the end of the motor shaft. It is best to mark these at the location of the keyway for the 1st stage impeller. A small center punch can be used to place a mark on the locknut and the end of the shaft. Do not remove the balance screws or weights from the balance locknut when all components will be re-used!

(a) Bend the lockwasher tab back from the slot on the impeller locknut.

(b) Remove the impeller locknut, lockwasher, spring washer, and steel spacer as applicable. Use a spanner wrench to remove the locknut. SeeFigure 8. The locknut has right hand threads. To loosen impeller locknut, turn it counter clockwise. Use a wire cable tie or tape to keep the items together. Tape the end of the shaft to prevent damage to the threads. Note: It is recommended that the lockwasher be discarded and replaced with a new lockwasher during re-assembly.

Figure 8

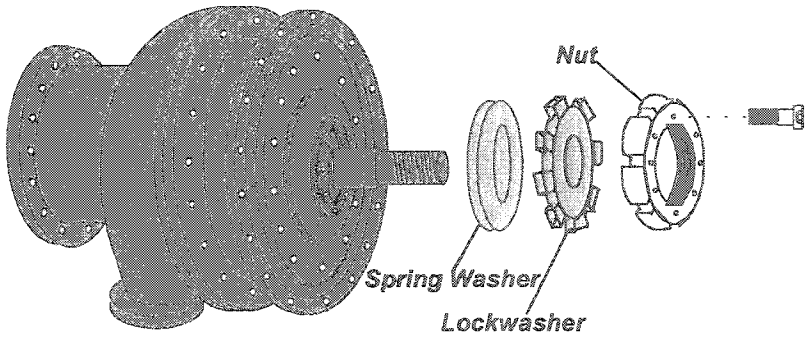

⚠ CAUTION

Possible Compressor Failure!

Use undamaged or new lockwashers for re-assembly. Once a locking tab has been bent over on a lockwasher it may become weak and break off if re-used. This could cause the impeller locknut to loosen and come off during operation, causing major damage to the compressor and motor.

(c) Note: Discard old or damaged lockwashers. Save the conical spring washer for re-use.

Figure 9

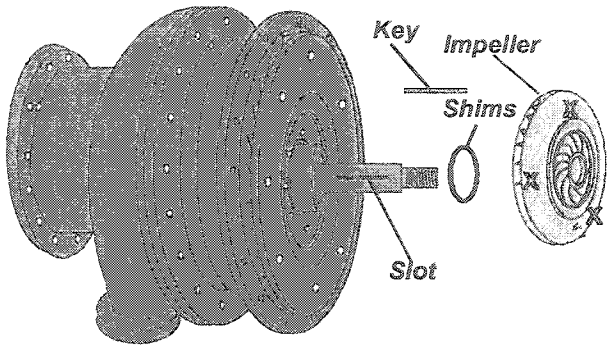

17 Remove the impeller (see Figure 9).

(a) Before removing the impeller, check the alignment of the impeller inside back discharge surface to the diffuser plate. The impeller surface should be aligned as shown in Figure 10. When reusing all rotating components and the alignment is not as specified above, measure and record the amount of shim(s) that may need to be added or removed during re-assembly.

Figure 10

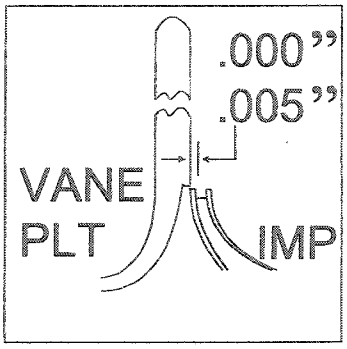

(b) It may be necessary to use a puller to remove the impeller. When using a puller, make sure the face of the puller is parallel to the face of the impeller hub to ensure a straight pull. Take care not to damage the machining center in the end of the shaft. If necessary, a small amount of heat may be required to loosen the impeller on the shaft.

When heating impeller, use a large (Rosebud) tip with a soft gentle flame. Do not overheat the impeller. The impeller should be heated so that it is warm to the touch. Do not exceed 120°F.

(c) Mark the impeller 1st STAGE.

18 Remove the impeller key and shims from behind the impeller. Clean the impeller, key and shaft. Tape the shims together and secure them to the impeller along with the key. Keep the parts for each stage together, and keep them separate from the other stage.

19 Measure and record the clearance between the 1st stage shaft seal and spacer. If the shaft seal has the lockwashers with bent over tab, bend them over using a screw driver. It is recommended the tab type lock washers be discarded and replaced by the ramp type washers shown in Figure 11. Remove the hex head bolts and ramp washers and remove the seal and mark it properly.

20 Remove the 1st stage spacer and spacer tube (some compressors).

Figure 11

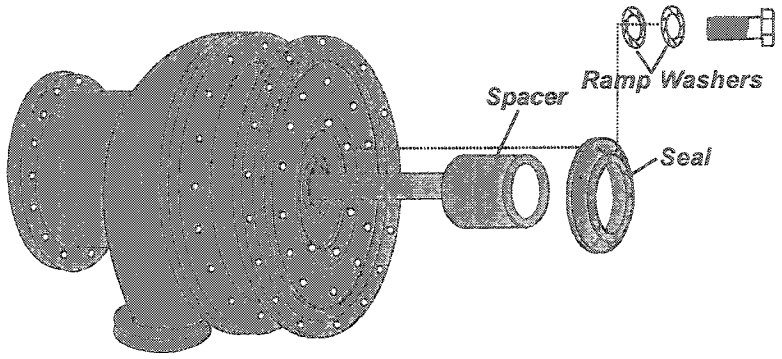

(a) Mark the spacer and spacer tube with its position on the shaft with the first stage impeller keyway at the 12 o'clock position. The shaft spacer has tapped pull-off holes that can be used to pull the spacer if needed. Using the pull-off holes may be required on units where corrosion has occurred due to leaks and moisture or other causes.

(b) Mark the spacer and spacer tube for TOP and 1st STAGE.

21 Remove the 1st stage vane plate. See Figure 12. Refer to Table 2 for the weight of the vane plate.

Figure 12

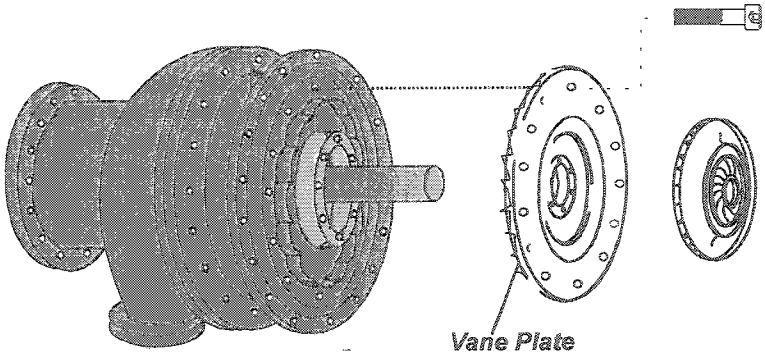

(a) Remove four 3/8" -16 socket head cap screws.

(b) Mark the vane plate for TOP and 1st STAGE.

(c) Install two 3/8" -16 x 6"stop bolts with heads in two of the bolt holes. Install two 3/8" - 16 x 6"guide pins (may be threaded rod, no heads) in the remaining two bolt holes.

(d) Remove the remaining socket head screws holding the vane plate to the interstage casing.

(e) Back the vane plate away from the interstage casing on the guide and stop bolts as far as the bolt heads will allow (approximately 6").

(f) Place a nylon sling through the center of the vane plate in the choke configuration.

(g) Lift the plate slightly with the nylon sling and remove the two remaining stop bolts with heads.

(h) Remove the vane plate, being careful not to damage the rotor shaft.

22 Remove the 2nd stage vane operator assembly. See Figure 13.

Figure 13

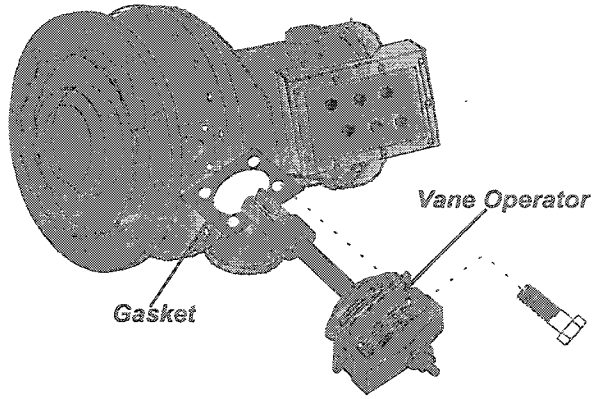

(a) Remove the 1/2" -13 x 1-3/4" hex head screws that secure the vane operator assembly.

(b) Remove the vane operator and gasket. Lightly coat all bare metal surfaces with compressor oil.

23 Remove the shroud and 2nd stage inlet vane assembly.

(a) Mark the assembly for TOP.

(b) Leave the guide pins installed in Step 32 in place. See Figure 14.

(c) Remove the 1/4" -20 x 3/4" flathead screws that secure the shroud. These screws use a thread locking compound and may be difficult to remove. Use an allen head socket for removal. Make sure the allen head socket does not have rounded edges. A hand impact driver may be helpful in removing screws.

(d) Attach a sling or cable to the shroud and remove the shroud and vane assembly. See Figure 14. For weights, see Table 2. Immediately coat the vane assembly shroud, pins, levers etc. with compressor oil or rust preventive oil to stop corrosion or rust.

Figure 14

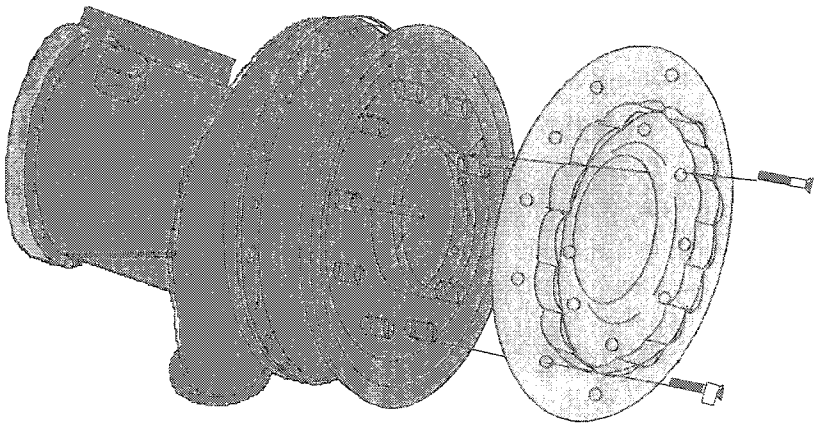

24 Remove the 2nd stage impeller nose seal. Refer to Figure 15.

(a) Measure and record the seal clearance. Table 3 provides proper clearances.

(b) Mark the seal for TOP and 2nd STAGE.

(c) Remove the 3/8" -16 x 1" hex head screws and tab or ramp washers.

(d) Remove the seal.

Figure 15

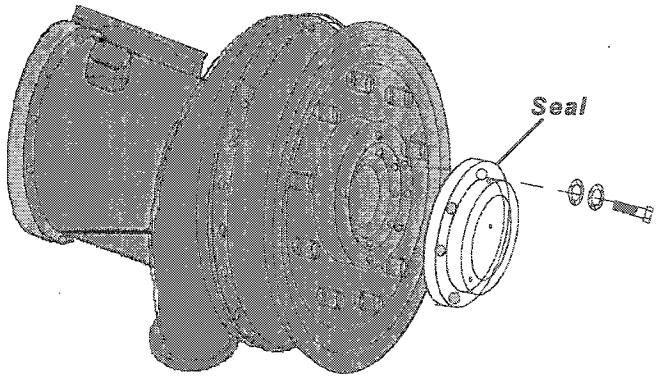

25 Measure and record the total indicated runout (TIR) on the nose of the 2nd stage impeller.

26 Remove the 2nd stage suction cover and o-ring. See Table 2 for the weight of the intermediate stage suction cover.

(a) Remove two bolts from the suction cover, 180 degrees apart on the horizontal centerline (3 and 9 o'clock positions) and insert 6" long guide pins.

(b) Remove a bolt near the bottom of the suction cover and one to the side of the lifting fixture and insert 6" long stop bolts (with heads) to limit movement of the cover until a

proper balance point with the lifting fixture is obtained. Attach the lifting plate. Remove the remaining bolts (leaving in place the guide pins and stop bolts) and pick up slightly on the cover. It may be necessary to use jacking bolts to push the cover away from the casing. If necessary, move the pick-up point on the lifting tool until the cover is balanced.

(c) Once the cover is balanced properly with the lifting tool, remove the stop bolts at the top and bottom of the cover and remove the suction cover. Lightly oil the cover flanges and store it properly to prevent rust or damage to the flange sealing surfaces. See Figure 16.

Figure 16

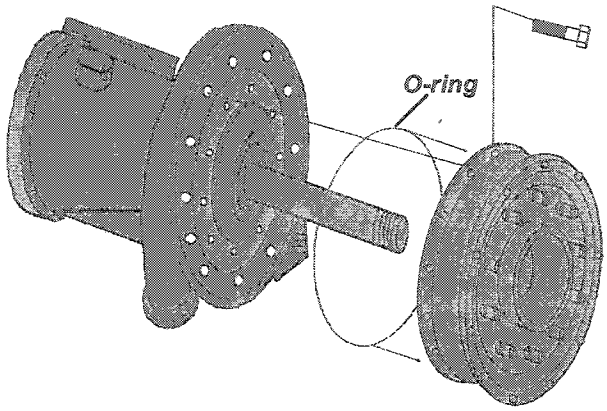

27 Remove the 2nd stage impeller and the shim(s) in front of impeller. Tape the shims to the spacer removed earlier.

(a) Before removing the impeller, check the alignment of the impeller inside the back discharge surface to the diffuser plate. The impeller surface should be aligned as shown in Figure 17. When re-using all rotating components and the alignment is not as specified, measure and record the amount of shims that may need to be added or removed during re-assembly.

(b) A puller may be necessary to remove the impeller. When using a puller, make sure the face of the puller is parallel to the face of the impeller hub to ensure a straight pull. Take care not to damage the machining center in the end of the shaft. If necessary, a small amount of heat may be required to loosen the impeller on the shaft. When applying heat, use a torch with a large (Rosebud) tip and a soft gentle flame. Do not overheat the impeller. The impeller should be heated so that it is warm to the touch. Do not exceed 120°F. See Figure 17.

(c) Mark the impeller 2nd STAGE.

CenTraVac General Service Literature

Figure 17

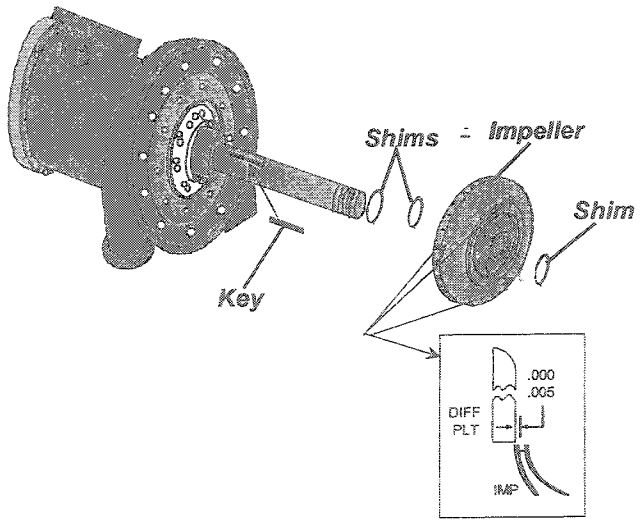

28 Remove the impeller key and shims from behind the impeller. Tape the shims together and secure them to the impeller along with the key. *Note: It is important that the thicker steel* spacer be installed against the shaft shoulder with the chamfer facing the shaft shoulder.

29 Remove the bearing oil seal and gasket.

(a) Measure and record the seal clearance. *IMPORTANT: Excessive clearance of this seal will cause oil loss.* Measure the seal clearance all the way around as shown. The total clearance between the shaft OD and seal ID will be 0.0040" to 0.0070". This seal is set in the factory with the bottom of the seal brought up to the bottom of the shaft and all the clearance (.004"-.007" total) at the top. The clearance between shaft and seal at the sides (3 and 9 o'clock positions) should be equal. See Figure 18.

Figure 18

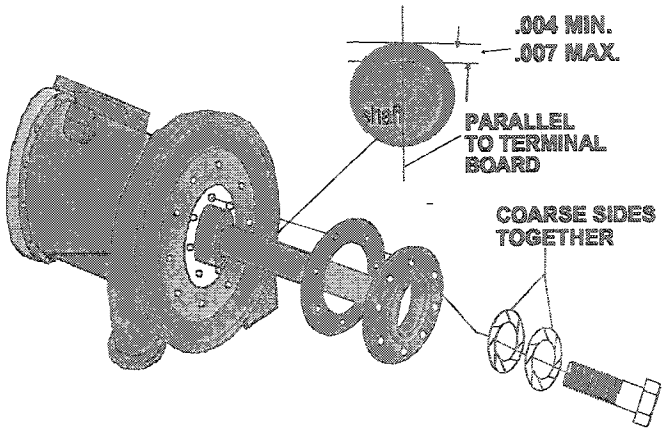

(b) Mark the seal for TOP. *IMPORTANT: The seal has a small oil drain hole in the back* which must be correctly aligned during re-assembly. The drain hole must be at the 6 o'clock position.

(c) Remove the hex head screws and tab or ramp washers securing the seal and gasket.

30 Remove the bearing oil seal mounting plate and gasket.

(a) Mark the plate for TOP.

(b) Remove two 3/8" -16 x 1" socket head screws and insert two stop bolts approximately 6"in length and two 6" long guide pins.

(c) Remove the remaining screws and then remove the plate and gasket. See Figure 19. Use a nylon sling or rope to lift the plate. See Table 2 for the weight of the plate. Place a container under the plate since some oil will drain out when the plate is removed. Lightly coat the plate with compressor oil to prevent rust.

Figure 19

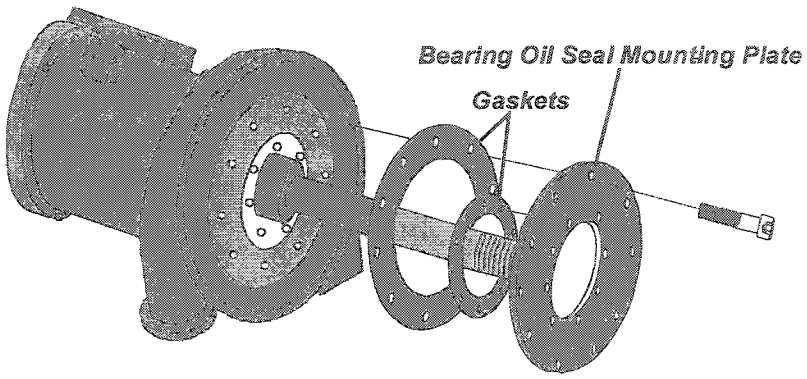

31 Unit mounted starter removal (when applicable).

(a) Attach a small chain to the lifting eye bolts on top of the starter. Pick up slightly on the chain to take up slack.

(b) (Remove the motor leads from the motor terminal studs. Mark each lead carefully with the corresponding motor terminal number stamped on the motor terminal board. Remove other electrical connections as necessary to allow enough room to remove the starter and mark them carefully.

(c) (Remove the bolts holding the starter to the motor housing and the bolts (when applicable) on the lower support bracket and move the starter away from the motor, being careful not to damage the motor terminals.

32 Motor removal.

(a) Sand the external oil supply and drain lines to remove paint, then cut them with a tubing cutter. Do not use a hacksaw to cut the lines. Always use a tubing cutter to avoid introducing copper chips (debris) into the unit.

(b) Heat the internal oil supply line to loosen and remove line. Bleed nitrogen through the line when heating to prevent build up of copper oxides inside the line. Use a wet rag to protect the threaded connections from excessive heat. See Figure 20.

Figure 20

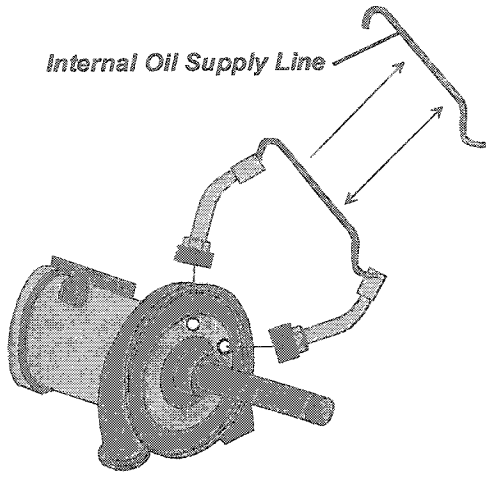

(c) If the motor is to be replaced or remanufactured, remove the bearing oil supply orifice on the thrust (ball) bearing end of the motor. The orifice threads into the motor bearing housing.

IMPORTANT!: Save the orifice for re-use.

IMPORTANT!: Failure to use a properly sized orifice on the ball bearing supply line could result in excessive oil flow and possible oil loss problems.

(d) Remove the flange bolts for the motor cooling refrigerant supply line and drain lines. In some instances, the drain lines may need to be cut to provide enough clearance for motor removal. Sand the drain line to remove paint then cut it with a tubing cutter. Do not use a hacksaw to cut the line. Always use a tubing cutter to avoid introducing copper chips (debris) into the unit.

IMPORTANT!: Remove the motor cooling orifice located between the motor housing and the motor cooling supply line flange. Save the orifice for re-use.

(e) Using two slings in the choke configuration, position them at each end of the motor housing. Refer to Table 4 for motor weights.

(f) Remove two of the bolts holding the motor assembly in the volute and install 5/8" guide pins (2-3" in length) so they are 180 degrees across from each other.

Note: On some units with large frame motors (>5000 frame), the bolts securing the motor to the discharge volute must be accessed from the compressor side. This will require removing the volute diffuser plate as detailed in step 33.

Figure 21

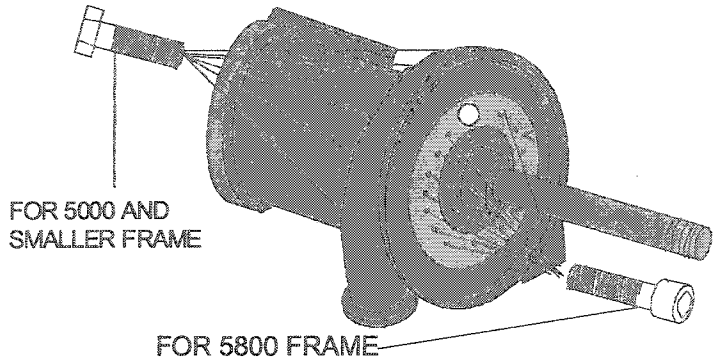

(g) Pick up on the slings to take up slack and remove the remaining bolts that secure the motor to the volute. Lift the motor slightly and move away from the volute being careful not to damage the motor shaft.

(h) Oil the shaft and cover all openings to prevent debris from entering the motor.

33 Volute diffuser plate removal.

(a) Remove four 1/2" allen head cap screws and insert two 6"long guide pins and two 4" long stop bolts.

(b) Remove the remaining allen head cap screws and slide the diffuser plate away from the volute. See Figure 22.

Figure 22

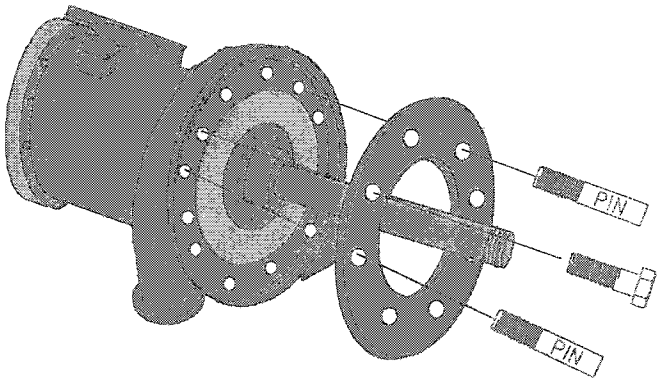

(c) Place a sling or cable in the choke configuration through to the center of the diffuser plate. See Table 2 for the weight of the diffuser plate.

(d) Lift the diffuser plate and remove the stop bolts.

(e) Slide the diffuser plate away from the volute. Oil the diffuser to prevent rusting.

34 Discharge volute removal.

(a) Remove the dowel pins on the discharge flange at the condenser and on the foot of the volute. First remove the threaded nut on the exposed end of the dowel pin. Then slip washers or a bushing over the pin and reinstall the nut. As the nut is tightened, the pin will be pulled out of place. The dowel pins allow for precise assembly of the compressor components in their original position.

(b) Place a sling in the choke configuration through the center of the volute. Take up the slack in the sling.

(c) Remove the bolts at the discharge flange and the compressor foot and then lift the volute. See Table 2 for volute weights.

(d) Clean and oil the discharge flange on the condenser and cover the opening to prevent entry of debris

Inspect all components for damage or excessive wear. Do not re-assemble the compressor using faulty components. Clean each component and apply a light coat of compressor oil to protect it from moisture and corrosion (especially o-ring and gasket surfaces).

This is a good opportunity to closely check the impeller bores for cracks. This can be done using a dye penetrant flaw detection kit. These kits are available through most weld supply or large industrial supply companies. The kits usually consist of a penetrant, developer, and cleaner, and include instructions on their use. Replace the impeller if cracked. Some types of damage to the impeller bore or nose seal area on impellers can be repaired by The Trane Company.

Note: Refer to Centravac Literature Section CTVH-XXXXXX for the CVHF compressor re- Assembly procedures.

Table 2
CVHF/CVDF Compressor Component Weights

Unit Type	Unit/Comp Size	Economizer (std, less free cooling)	Suction Elbow	1st Stage Inlet Vane	1st Stage Suction Cover	Impellers All Stages	2nd Stage Alum Vane Plate	2nd Stage Casing	2nd Stage Inlet Vanes and Plate	Steel Volute Diffuser Plate	Discharge Volute	Complete Compressor Including Motor
CVHF	350-485	700 lb. (318 kg.)	494 lb. (224 kg.)	295 lb. (134 kg.)	1400 lb. (635 kg.)	64 lb. (29 kg.)	190 lb. (86 kg.)	1400 lb. (635 kg.)	82 lb. (37 kg.)	289 lb (131 kg.)	1336 lb. (606 kg.)	7610 lb. (3452 kg.)
CVHF	555-640	700 lb. (318 kg.)	494 lb. (224 kg.)	311 lb. (141 kg.)	1740 lb. (789 kg.)	64 lb. (29 kg.)	190 lb. (86 kg.)	1840 lb. (835 kg.)	88 lb. (40 kg.)	356 lb. (161 kg.)	1418 lb. (643 kg.)	8230 lb. (3733 kg.)
CVHF	650-910	836 lb. (379 kg.)	688 lb. (312 kg.)	408 lb. (185 kg.)	1690 lb. (767 kg.)	70 lb. (32 kg.)	190 lb. (86 kg.)	1990 lb. (903 kg.)	88 lb. (40 kg.)	309 lb. (140 kg.)	1430 lb. (649 kg.)	9200 lb. (4173 kg.)
CVHF	1060-1280	836 lb. (379 kg.)	688 lb. (312 kg.)	425 lb. (193 kg.)	1718 lb. (779 kg.)	70 lb. (32 kg.)	190 lb. (86 kg.)	2010 lb. (912 kg.)	94 lb. (43 kg.)	309 lb. (140 kg.)	1820 lb. (826 kg.)	9800 lb. (4445 kg.)
CVHF (ext cap)	1470-1720	836 lb. (379 kg.)	1000 lb. (454 kg.)	750 lb. (340 kg.)	2133 lb. (968 kg.)	100 lb. (45 kg.)	290 lb. (132 kg.)	2210 lb. (1002 kg.)	300 lb. (136 kg.)	712 lb. (323 kg.)	2250 lb. (1021 kg.)	13120 lb. (5951 kg.)
CDHF	1500	836 lb. (379 kg.)	688 lb. (312 kg.)	See Compressor Size CVHF 650-910								
CDHF	2000	836 lbs (379 kg.)	688 lb. (312 kg.)	See Compressor Size CVHF 650-910								
CDHF	2100	836 lbs (379 kg.)	688 lb. (312 kg.)	See Compressor Size CVHF 1060-1280								
CDHF	2500	836 lbs (379 kg.)	688 lb. (312 kg.)	See Compressor Size CVHF 1060-1280								

Table 3
CVHF/CDHF Compressor Clearances

Unit Model and Size	Shaft Runout Max	Interstage Seal to Spacer (all stages)	Impeller Nose Runout Max*	Bearing Oil Seal+
CVHF and CDHF (all)	0.0015"	0.0080"-0.0140"	0.0035" (cast) 0.0050" (fab)	0.0040"-0.0070" Total

* Clearances shown for cast impellers and welded/fabricated impellers.

\+ Seal should be lightly touching the bottom of the shaft and maximum clearance at the top.

Table 4
CVHF/CDHF CenTraVac Motor Weights

Unit Type	Unit/ Compressor Size (60Hz)	Low Voltage (208-600 Volts)	High Voltage (2300-6600 Volts)
CVHF	350-485	2637 lb. (1196 kg.)	2806 lb. (1273 kg.)
CVHF	555-640	2833 lb. (1285 kg.)	2936 lb. (1332 kg.)
CVHF	650-910	3887 lb. (1763 kg.)	3923 lb. (1779 kg.)
CVHF	1060-1280	4439 lb. (2013 kg.)	4713 lb. (2138 kg.)
CDHF	1500	3887 lb. (1763 kg.)	3923 lb. (1779 kg.)
CDHF	2000	3887 lb. (1763 kg.)	3923 lb. (1779 kg.)
CDHF	2100	4439 lb. (2013 kg.)	4713 lb. (2138 kg.)
CDHF	2500	4439 lb. (2013 kg.)	4713 lb. (2138 kg.)

Note: Weights shown are for the largest motor available in the compressor size.

Note: 2-stage CVHF/CDHF compressors are not applied on 50Hz.

Figure 23
Cross Section view of typical CVHF Motor/Compressor assembly

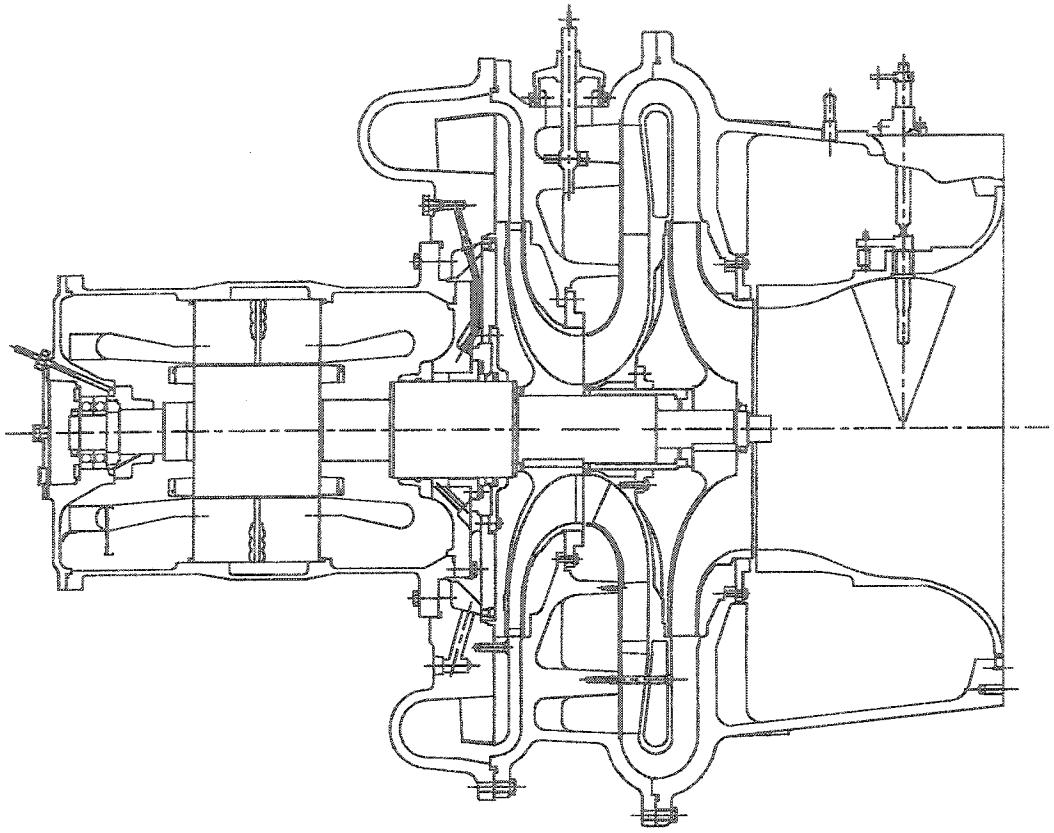

Compressor/Motor Record Sheet

Job Name:	*Disassembly:*	*CVHE:*
Technician:	*Assembly:*	*CVHF:*
Date:	*City:*	*CVHG:*
Unit Model:	*Serial #:*	

(in.)	*1st Stage Impeller Seal Clearance*
(in.)	*1st Stage Impeller Nose Runout*
(in.)	*1st Stage Impeller OD. to Diffuser Clearance*
(in.)	*Shaft Runout (TIR)*
(in.)	*1st Stage Spacer Seal Clearance*
(in.)	*2nd Stage Impeller Seal Clearance*
(in.)	*2nd Stage Impeller Nose Runout*
(in.)	*2nd Stage Impeller OD. To Diffuser Clearance*
(in.)	*2nd Stage Spacer Seal Clearance*
(in.) 12:00	*Oil Seal Clearance (Record 4 Places)*
(in.) 6:00	
(in.) 3:00	
(in.) 9:00	

Air-Run (Elbow Off)	*(in./sec. H)*	*(in./sec. V)*	*(in./sec. A)*
Air-Run (Elbow On)	*(in./sec. H)*	*(in./sec. V)*	*(in./sec. A)*
Freon-Run	*(in./sec. H)*	*(in./sec. V)*	*(in./sec. A)*

Comments:

Centravac General Service Literature

Centravac General Service Literature

CTVH-GCO-04-EN

CVHF Compressor Assembly (Including)

- Discharge Volute Installation
- Motor Installation
- Unit Mounted Starter Installation
- Compressor Assembly
- Suction Elbow Installation
- Economizer Installation

CVHF and CDHF Unit:

Compressor Sizes 350-1280 Ton

This section describes re-assembly (including discharge volute, motor, unit mounted starter, suction cover and economizer installation) procedures for the model CVHF CenTraVac compressor assemblies. The same information applies to the compressors for the CDHF duplex units. For disassembly and re-assembly procedures for the motor, see CenTraVac Service Literature Section *CTVH-GMO-01*.The procedures covered in this section may be used for the CVHF and CDHF compressor sizes 350 thru 1280 tons. For information on the CVHE and CVHG compressors, see Centravac Literature Sections *CTVH-GCO-01& 02.*

See *CTVH-GCO-05 & 06* for the extended capacity compressor sizes 1470 and 1720.

Always check the appropriate table to obtain weights and tolerances for a particular type or size compressor.

Warning and Cautions

WARNINGs and CAUTIONs appear at appropriate sections through out this manual. Read these carefully.

WARNI NG: indicates a potentially hazardous situation which, if not avoided, could result in death or serious injury.

CAUTION: indicates a potentially hazard us situation which, if not avoided, may result in minor or moderate injury.

CAUTION: may also be used to alert the reader to a situation that could result in equipment or property-only damage.

Centravac General Service Literature

IMPORTANT!: Before beginning re-assembly o the compressor, it is important to check all pieces for damage, rust, or worn parts that could result in leaks or problems with unit operation or reliability. Clean all gasket and o-ring surfaces thoroughly. All traces of previous sealants must be completely removed and the surfaces wiped with a suitable solvent such as industrial grade isopropyl alcohol to remove all traces of oil and other contaminants. When using Loctite between flanges do not touch the flanges after cleaning and before application of Loctite. The oils left from fingerprints can affect the sealing ability of the Loctite. Check flange surfaces or high spots left around bolt holes and at jack bolt locations. These high spots can cause flange separation and may result in leaks. If necessary use a flat file to remove high spots.

⚠ WARNING
Hazardous Chemicals!
Always use proper protection when handling solvents and other potentially harmful chemicals. Use rubber gloves, clothing and eye protection and avoid prolonged inhalation of vapors. Failure to do so can result in death or serious injury.

IMPORTANT!: See the chemicals MSDS (Material Safety Data Sheet) for additional precautions and warnings on use.

The procedures for using an o-ring sealant can be found in *General Service Bulletin CTV-SB-66* (latest revision).

⚠ WARNING
Heavy Objects!
Use lifting and rigging equipment that is rated to handle the maximum weights. Improper use of lifting fixtures may result in death or serious injury.

Follow all proper procedures when handling large compressor components. Use lifting and rigging equipment that is rated to handle the maximum weights of the pieces found in Table 2 in the back f this literature section. It is recommended that all lifting devices have a capacity rating no less than 100%of the weights shown. Carefully inspect lifting equipment to ensure it is in good condition and has been inspected and certified for continued use at proper intervals as appropriate.

For larger units it may be advisable to block larger components like the economizer and piping when the bolts are removed and then use slings (in the choke configuration) at each end to lift the part. See Table 2 for weights of components. Make sure the proper balance point of the load is found, to prevent it from rotating as it is lifted. See Figure 1 for proper sling use.

Centravac General Service Literature

Note: The lifting capacity of a sling is reduced when the load angle is less than 90°. See Table 1 or load actor values. For angles less than 90°, multiply the load actor by the nominal sling lifting capacity to determine the allowed lift weight.

Figure 1
Typical Choke Sling Cable Arrangement

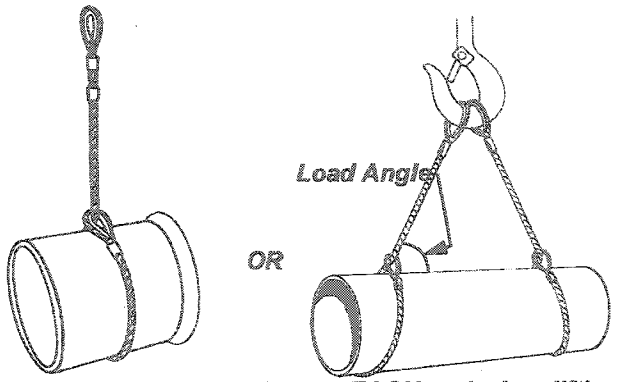

NOTE: Use slings at EACH end when lifting.

Table 1

Load Angle (°)	Factor	Load Angle (°)	Factor
90	1.000	50	0.7660
85	0.9962	45	0.7071
80	0.9848	40	0.6428
75	0.9659	35	0.5736
70	0.9397	30	0.5000
65	0.9063	25	0.4226
60	0.8660	20	0.3420
55	0.8192	15	0.2589

Centravac General Service Literature

Figure 2

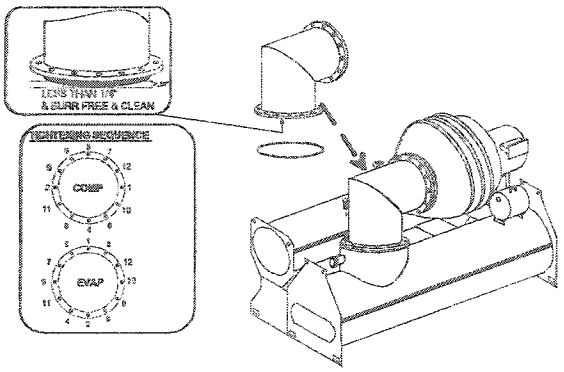

Before proceeding with compressor re-assembly review the procedures in General Literature Section CTVH-GCO-03EN containing information and details on CVHF compressor disassembly.

Unless otherwise specified, the bolt torques required on all flange joints with o-rings or joints where only Loctite 515 is used, can be found in Table 3 in the back of this section. The bolt torques listed in Table 3 are for Grade 5 bolts. *Use only grade 5 bolts or better.* Tighten bolts to final torque in incremental steps. Unless otherwise specified follow a crossing pattern when tightening bolts. See Figure 2 for a typical recommended bolt tightening sequence. The recommended bolt torque values in Table 3 do not apply to bolts used with flat gaskets. Bolt torques for flat gaskets will be provided in the sections covering their installation.

⚠ WARNING
Hazardous Voltage!

Before working on this or any electrical equipment, always disconnect the electric power supply. Follow proper lockout/tagout procedures to ensure the power cannot be applied during repairs. Failure to do so may result in death or serious injury.

Re-assembly

1 Discharge Volute Installation

(a) Clean the dowel pins and the dowel pin holes in the condenser discharge flange and evaporator mounting base to remove rust or other debris. Lightly coat the pins with a petroleum jelly or anti-seize compound.

(b) Clean the flanges and apply Loctite 515 and o-ring (when applicable) as recommended.

IMPORTANT!: See Service Bulletin CTV-SB-66 (latest revision) or procedures for using Loctite 515.Always check the date on the Loctite tube to ensure the sealant use time has not expired.

(c) Use a sling or cable in the choke configuration through the center of the volute for lifting. Be sure to protect the flange surfaces when using a cable. Place the volute on the condenser and line up the dowel holes.

(d) Tap the dowels in place as the bolts in the foot and discharge flange are tightened. Torque the bolts per Table 3 in the back of this section.

2 Motor Installation.

(a) Before installing the motor, check shaft run out (TIR) as shown in Figure 3. Using a dial indicator turn the shaft and measure the runout at the end f the shaft. The maximum allowable runout is .0012"TIR. Make sure the end of the shaft is wrapped with tape for protection during assembly.

Figure 3

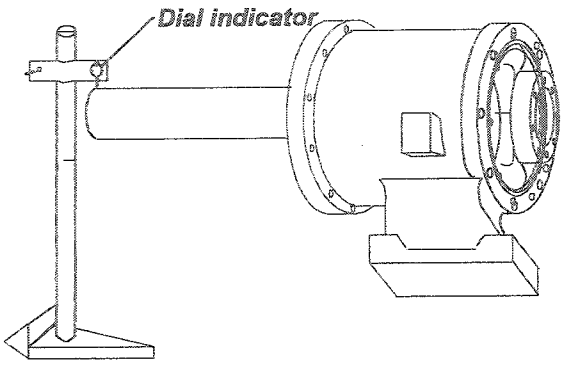

(b) Place two slings or cables in the choke configuration around the motor. Place them at each end of the motor near the flanges and lift the motor slightly to get the proper balance point. See Table 4 for maximum motor weights.

(c) Apply Loctite 515 and -ring (when applicable) around the motor (shaft end) end bell.

(d) Install two guide pins in the volute r motor flange (large frame) to help guide the motor in place. See Figure 4.

Figure 4

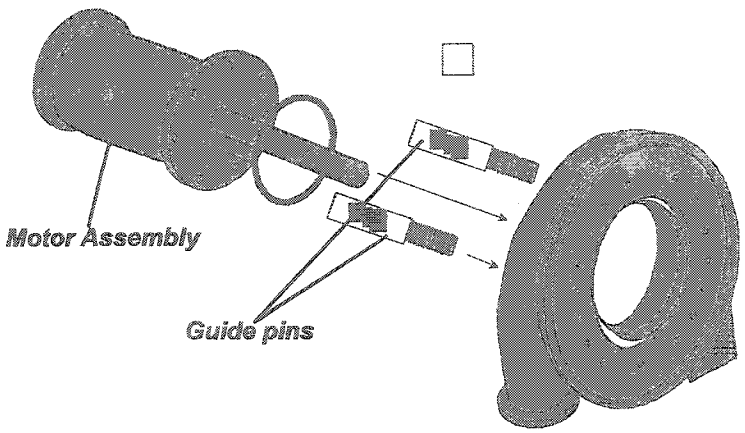

(e) Lift the motor in place and hand tighten the bolts holding the motor to the volute Snug the bolts and remove the guide pins. Note on some large frame motors, the bolts (allen head) that hold the motor to the volute are located on the compressor side of the volute. The proper torque for both styles of bolts is 120-165 lb- ft.

Figure 5

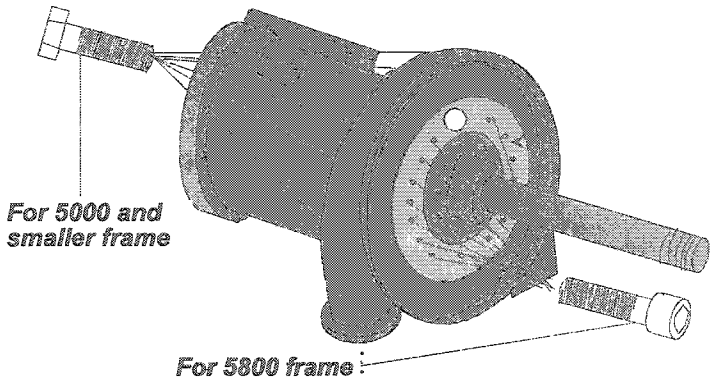

3 Volute Diffuser Plate Installation.

(a) Install two pins in the volute to guide the diffuser in place.

(b) Place a sling r cable in the choke configuration through the center of the diffuser.

(c) Lift the diffuser and slide it over the guide pins. Install countersunk screws and torque them to 55-75 lb-ft. Make sure the screws in the counterbore area behind impeller do not protrude more than .060"above the surface.

Centravac General Service Literature

Figure 6

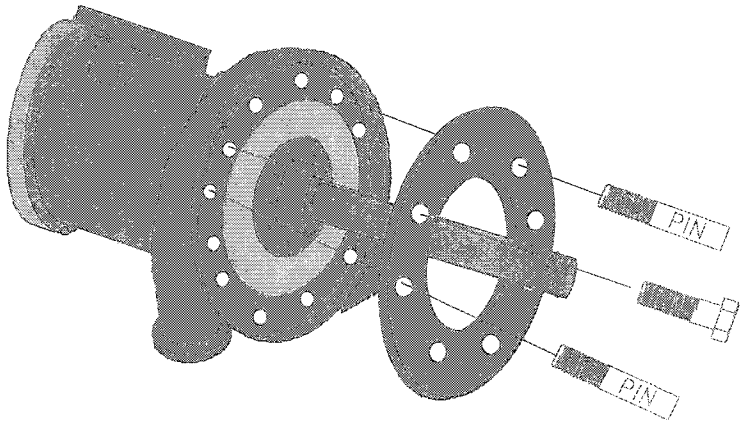

4 Oil Feed Tube Installation.

(a) Clean the ends of the lines thoroughly using a scotch bright pad or equivalent for metal. See Figure 7. Remove as much of the old brazing material as possible. Clean the inside of the couplings using a steel tubing brush. Use Loctite 277 Sealant on the threads.

Figure 7

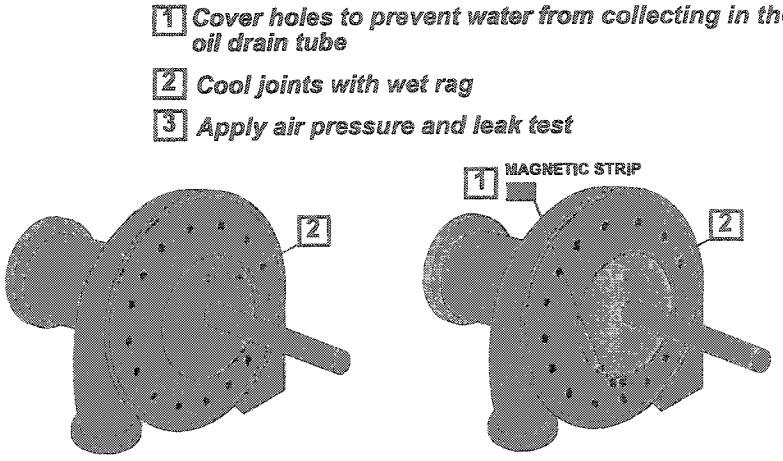

(b) Wrap a wet rag around both ends f the line t prevent overheating the threaded joints.

(c) Using a regulator, allow a slight purge of dry nitrogen to flow through the volute threaded fitting and oil supply line to prevent a buildup of oxidation when brazing.

(d) Braze the lines as shown in Figure 8 using a good Sil-Fos material with 5-15%(Ag) silver.

Figure 8

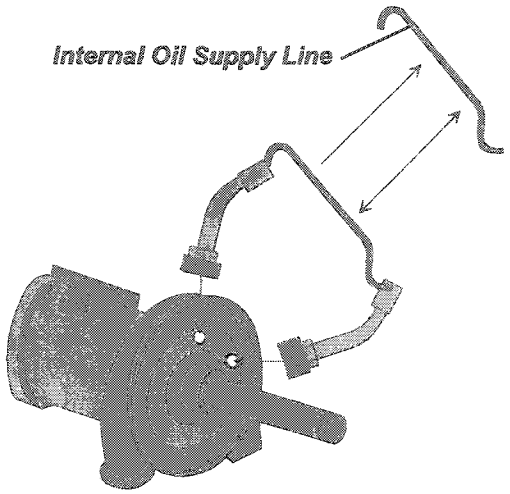

(e) After brazing, allow the lines to cool. Increase the nitrogen pressure and check the line and threaded fittings for a leak using a soap solution.

5 Bearing Cover Plate Installation

(a) Install two guide pins in both the inner and outer bolt centers to help hold the gaskets in place and to align the cover plate.

(b) Lightly coat both the inner and outer gaskets with a small amount of petroleum jelly to help hold them in place.

(c) Using a sling or cable in the choke configuration, slide the bearing cover plate in place while observing the gaskets to make sure they don't move out of position. See Figure 9.

Figure 9

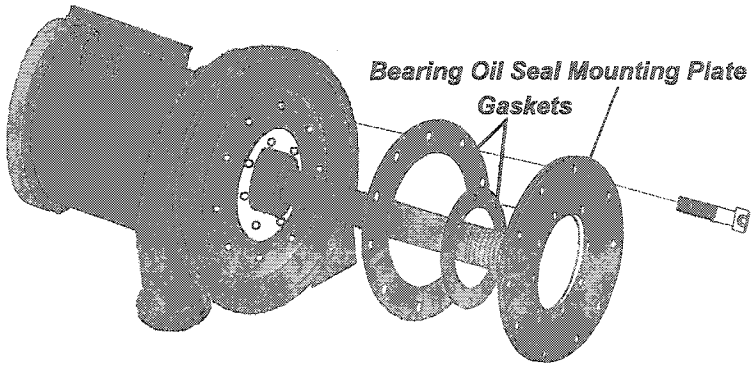

(d) Install the outer mounting bolts. Remove the outer guide pins and torque the bolts to 20-27 lb-ft.

6 Bearing Oil Seal Installation.

(a) Lightly coat the bearing oil seal gasket (between the bearing cover plate and oil seal) with a small amount of petroleum jelly to help hold it in place. Make sure the gasket behind the bearing cover plate is still in its proper position.

(b) Slide the bearing oil seal over the guide pins. IMPORTANT: The oil seal has a drain *hole between the teeth of the seal that must be installed at the 6 o'clock position.* Install the mounting bolts with ramp washers and hand tighten. Remove the guide pins.

NOTE: Check the clearance between the bearing oil seal and the shaft outside diameter at the seal location. The maximum allowable total clearance is .0040- .0070". IMPORTANT: Clearances in excess of this amount will lead to oil loss.

(c) Push up on or lightly tap the seal until the bottom of the seal touches the bottom of the shaft. Position the seal so the clearances on each side of the seal (3 and 9 o'clock) are equal. Using a feeler gauge, measure the total clearance at the 12 o'clock position and the clearances at the sides. It is recommended that a new oil seal be used if there is any question about the total clearance of the existing seal.

Figure 10

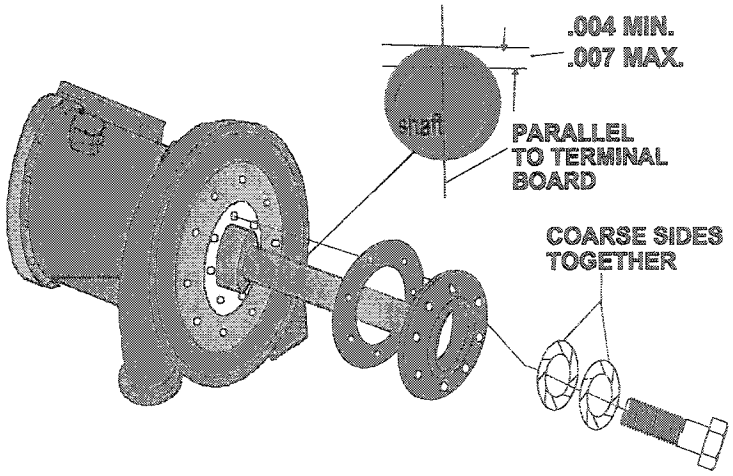

(d) With all the clearance at the top of the seal, tighten the bolts to 20-27 lb-ft. Recheck the clearance and rotate the shaft to ensure it turns freely. See Figure 10.

(e) At this point you may want to run only the motor to check for balance. This is desirable if a replacement motor is being installed or if the rotor was changed or repaired. See *General Service Bulletin CVHE-SB-18* (latest revision) for the procedures when air running motors.

7 2nd Stage Impeller Installation.

(a) Clean the impeller shims. Slide the impeller shims with the thicker steel shim against the shaft shoulder. *Note: The chamfer on the thicker steel shim should be facing the shaft shoulder.* Impeller alignment should have been checked during disassembly and any adjustments to the shim(s) thickness necessary to get proper impeller alignment can be made at this time. If the impeller or motor shaft has been replaced, then you may want to use only the steel spacer for an initial alignment to determine how many additional shims may be required.

(b) Thoroughly clean the impeller, key and shaft. Check the impeller bore for cracks. This can be done using a dye penetrant flaw detection kit. These kits are available through most weld supply or large industrial supply companies. The kits usually consist of a penetrant, developer, and cleaner and include instructions on their use. Replace the impeller if cracked. Some types of damage to the impeller bore or nose seal area on impellers can be repaired by The Trane Company.

(c) Check the impeller key and keyway in the impeller bore for damage. Check to ensure the sides of the keyway in the impeller bore are square.

(d) Coat the impeller bore and shaft with compressor oil. Install the key in the shaft. Slide the impeller on the shaft until it contacts the shims. Check the alignment of the impeller. The back inside discharge surface of the impeller should be flush to no more than a .0050" set out beyond the face of the diffuser plate. See Figure 11.

Figure 11

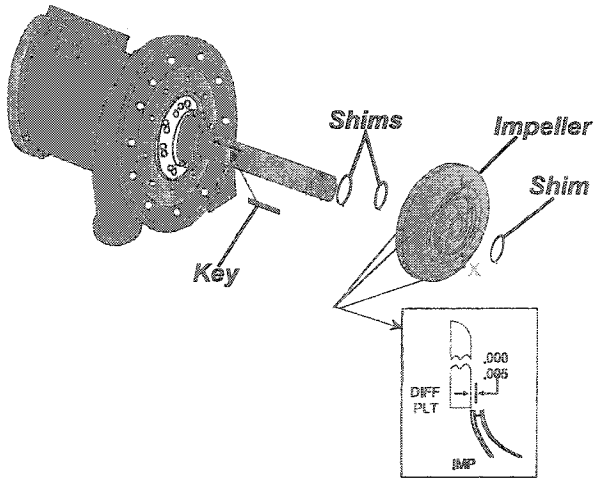

If the impeller does not slide easily on the shaft, it may be necessary to heat the impeller slightly to allow it to slide on the shaft. Before heating the impeller, inspect the impeller bore for debris or a dent (high spot) that could be causing interference. When heating the impeller, use a large (Rosebud) tip with a soft gentle flame. The impeller should be heated so that it is warm to the touch. Do not exceed 120° F. *The impeller bore (ID) to shaft* diameter (OD) total clearance should be .0000 -.0015"maximum.

(e) When required, remove the impeller and add shims to obtain the proper alignment. Slide the impeller on the shaft and recheck the alignment.

(f) Check the radial clearance between the impeller OD and the vane plate ID The minimum clearance around the entire circumference is .0220"minimum. In the unlikely event that clearance around the impeller is inadequate, it will be necessary to reposition the diffuser plate to obtain proper clearance. To reposition the diffuser plate first remove the impeller, then loosen the diffuser plate mounting bolts just enough to allow diffuser movement. Wrap a pry bar with a rag to prevent scratching the metal, then use the pry bar to shift the diffuser plate in the desired direction. Then retighten the diffuser plate bolts to 55-75 lb-ft. Re-install the impeller and recheck the clearances.

(g) Check the impeller nose run out using a dial indicator with a magnetic base. Rotate the impeller and measure the maximum runout (see Figure 12). The allowable maximum runout for fabricated (welded) impellers is .0050" and .0035" for cast style impellers.

Figure 12

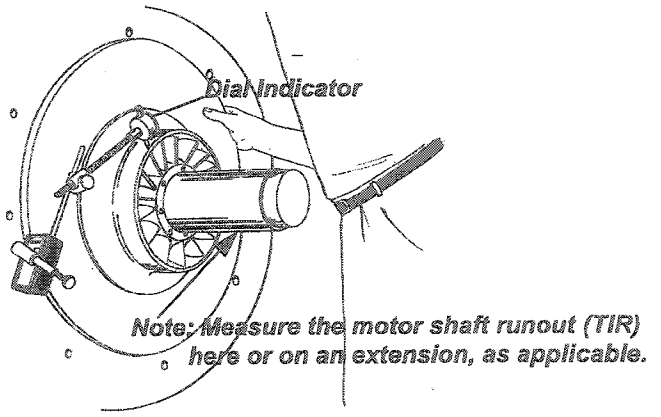

(h) Install any shim(s) removed during disassembly in front of the 2nd stage impeller.

8 2nd Stage Suction Cover Installation.

(a) Clean the cover and discharge volute.

(b) Attach the lifting fixture to the suction cover and find the proper balance point.

(c) Apply Loctite 515 and an o-ring (when applicable) per recommended procedures.

(d) Install four guide pins to help align the suction cover as shown in Figure 13. Make sure the scribe marks between the volute and the suction cover are lined up before final tightening of the bolts.

Figure 13

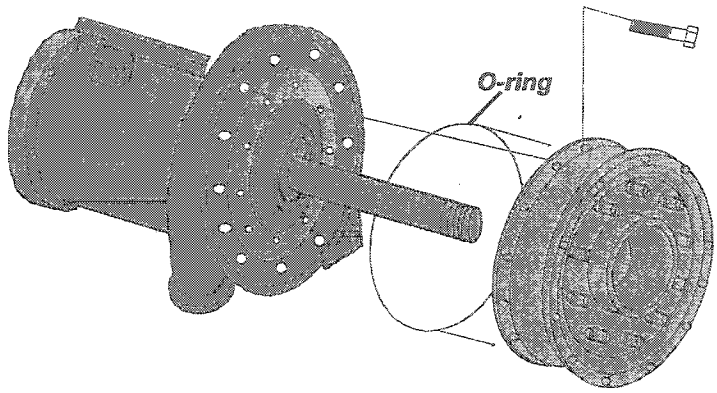

(e) Install bolts and torque to 120-165 lb-ft.

9 Impeller Nose Seal Installation.

(a) Thoroughly clean the nose seal to remove any debris or loose chips from the labyrinth teeth.

(b) Use the original bolts and new locking tab washers.

(c) Using feeler gauges, center the seal around the nose of the impeller. The proper clearance can be found in Table 5.

Figure 14

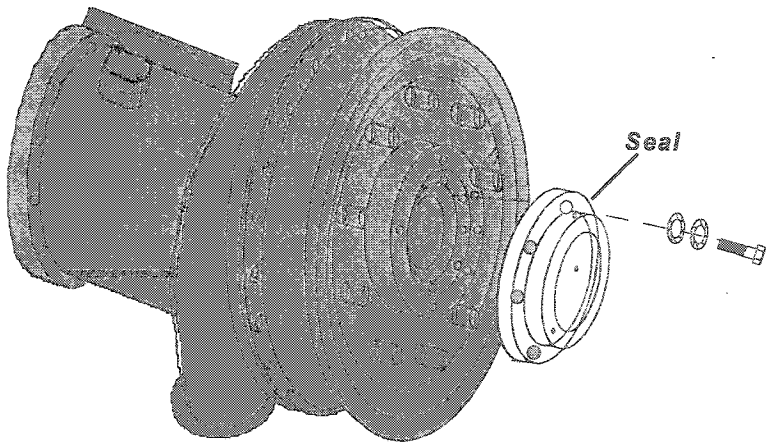

(d) With the seal set properly, tighten the seal retaining bolts to 20-27 lb-ft. Recheck seal clearance.

(e) Rotate the shaft to ensure it turns freely.

10 2nd Stage Vanes Assembly Installation.

(a) Install two guide pins in the suction cover to help align the shroud and vane assembly.

(b) Use a sling to lift the vane assembly in place. It is recommended that new screws be used. If reusing the original screws, coat the threads with a thread locking compound. New screws will have a nylon locking insert. It is recommended the new screws also be coated with a thread locking compound. See Figure 15.

Figure 15

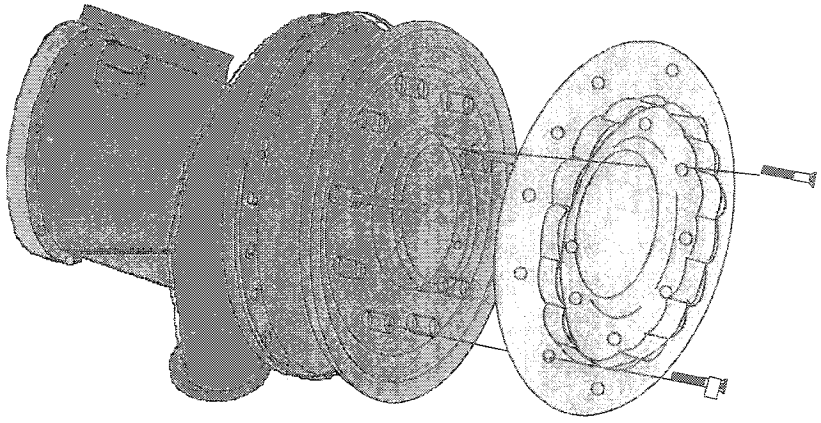

(c) Tighten the allen head screws to 5-7 lb-ft. The screw heads must be flush or below the surface. Note: if installing a complete new vane/shroud assembly, you will first have to counter-sink the 8 mounting holes to accept the screw heads.

11 2nd Stage Vane Operator Assembly Installation.

(a) Clean the flanges on the suction cover and vane operator assembly.

(b) Clean any powder residue from the new gasket. The gasket should be installed dry. Slide the fork of the vane operator lever over the pin in the vane drive ring pin assembly.

(c) Tighten bolts to 33-50 lb-ft. See Figure 16. Do not over-tighten.

Figure 16

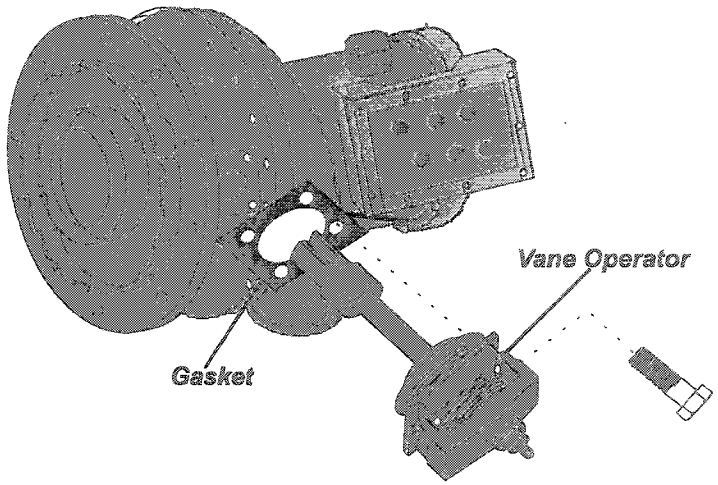

(d) Open and close the vane assembly to ensure it operates freely. Check to make sure the vanes close completely and open fully.

12 2nd Stage Aluminum Vane Plate Installation.

(a) Before installing the vane plate, make sure the shim in front of the impeller has been installed.

(b) Clean the aluminum plate.

(c) Insert the four guide pins to help align and hold the vane plate during installation.

(d) Lift the plate through the center using a sling in the choke configuration.

(e) It is recommended that new bolts be used. If reusing the original bolts, coat the threads with a thread locking compound. New bolts have a nylon locking insert. See Figure 17.

Figure 17

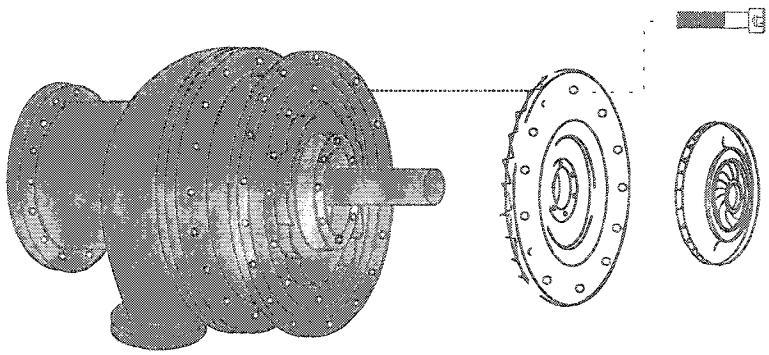

(f) Tighten the bolts to 20-27 lb-ft.

13 Interstage Spacer Installation.

(a) For units with a the large diameter (straight) shaft at the 1st stage impeller location, slide the shim and spacer on the shaft that was removed during disassembly (see Figure 18. Make sure the spacer, which was marked during disassembly, is placed back on the shaft in the proper position. This will help maintain proper balance if all the rotating components are being re-used.

Figure 18

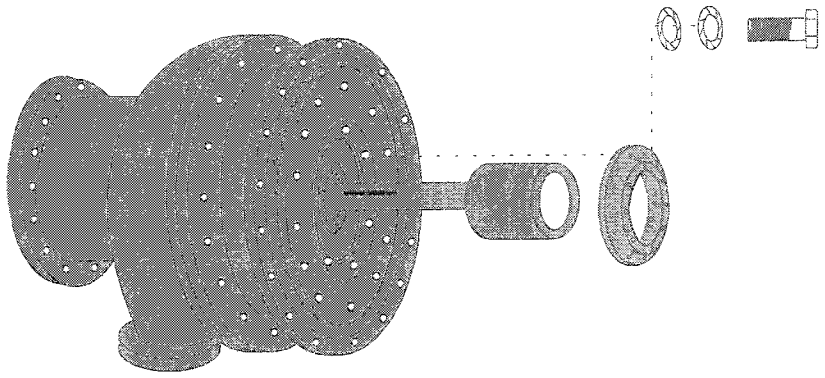

(b) Some units have a step shaft, where the shaft diameter for the 1st stage impeller is smaller than the remainder of the shaft. Depending on unit size and design sequence, there may be a .500"aluminum spacer mounted against the 2nd stage impeller hub and then a longer aluminum spacer that steps down to the smaller shaft diameter. Some units will have a thin shim against the 2nd stage impeller, a long aluminum spacer tube, and then an end spacer that fits inside the tube. Make sure the spacer tube and end spacer (when used), which were marked during disassembly, are placed back on the shaft in the proper position. This will help maintain proper balance if all of the rotating components are being re-used.

14 Interstage Spacer Seal installation.

(a) Install the seal and bolts with a ramp washer over the interstage spacer.

(b) Center the seal using feeler gauges. The allowable tolerance can be found in Table 5.

(c) Tighten the bolts to 20-27 lb-ft. See Figure 19.

Figure 19

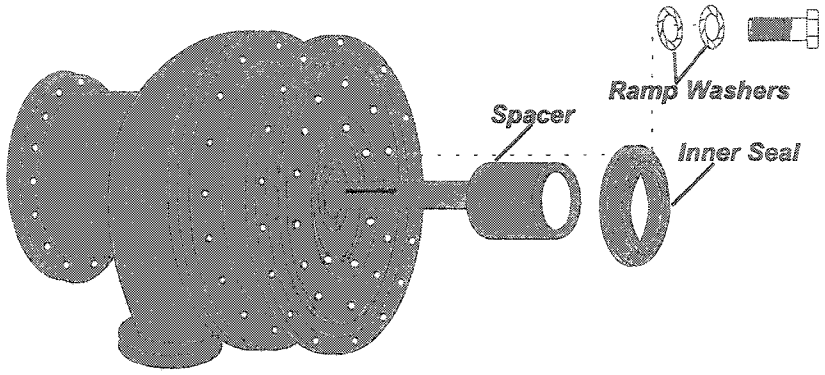

15 1st Stage Impeller and Impeller Locknut Installation

(a) If impeller shims were originally installed, clean the impeller shims and slide them up against the interstage spacer. Impeller alignment should have been checked during disassembly and any adjustments to the shim(s) thickness necessary to get proper impeller alignment can be made at this time. If the impeller or motor shaft has been replaced, then you may want to use only a portion of the original shims for an initial alignment to determine how many additional shims may be required.

(b) Thoroughly clean the impeller, key and shaft. Check the impeller bore for cracks. This can be done using a dye penetrant flaw detection kit. (These kits are available through most weld supply or large industrial supply companies. The kits consist of a penetrant, developer and cleaner and include instructions on their use.) Replace the impeller if cracked. Some types of damage to the impeller bore or nose seal area on impellers can be repaired by The Trane Company.

(c) Check the impeller key and keyway in the impeller bore for damage. Check to ensure the sides f the keyway in the impeller bore are square.

(d) Coat the impeller bore and shaft with compressor oil. Install the key in the shaft. Slide the impeller on the shaft until it contacts the shims. Check alignment of the impeller.

The back inside discharge surface f the impeller should be flush t no more than a .0050"set out beyond the face of the vane plate. See Figure 20.The back plate on welded impellers may have some distortion due to the weld process. Locate the impeller back inside edge (lowest point) so it is flush with the vane plate.

Figure 20

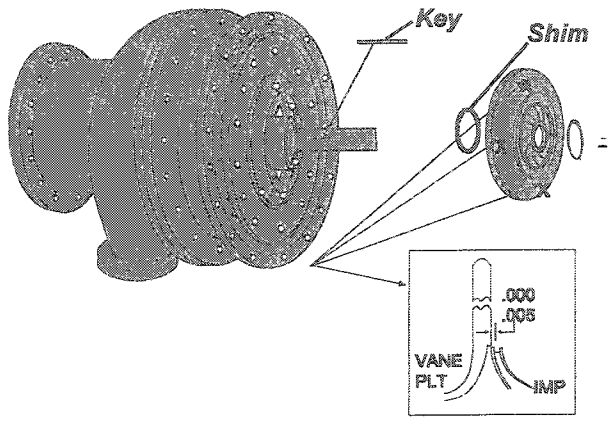

If the impeller does not slide easily on the shaft, it may be necessary to heat the impeller slightly to allow it to slide n the shaft. Before heating the impeller, inspect the impeller bore for debris or a dent (high spot) that could be causing interference. When heating the impeller, use a large (Rosebud) tip with a soft gentle flame. The impeller should be heated so that it is warm to the touch. Do not exceed 120°F. The impeller bore (ID) to shaft diameter (OD) total clearance should be .0000 -.0015"maximum.

(e) When required, remove the impeller and add shims to obtain the proper alignment. Slide the impeller on the shaft and recheck alignment.

(f) Check the radial clearance between the impeller OD and the vane plate ID The minimum clearance around the entire circumference is .0220"minimum. In the unlikely event that clearance around the impeller is inadequate, it will be necessary to reposition the diffuser plate to obtain proper clearance. To reposition the diffuser plate first remove the impeller, then loosen interstage seal mounting bolts, then loosen the diffuser plate mounting bolts just enough to allow diffuser movement. Wrap a pry bar with a rag to prevent scratching the metal, then use the pry bar to shift the diffuser plate in the desired direction. Then retighten the diffuser plate bolts to 55-75 lb-ft. Re-set the interstage seal clearances as was described in step 14 and tighten the seal retaining bolts to 20-27 lb-ft. Reinstall the impeller and recheck the clearances.

(g) Before installing the spacer, conical (spring) washer, and lockwasher on the shaft, (Figure 29) thread the locknut on by hand to ensure there are no burrs or damaged threads etc. The locknut thread fit should be snug but may be turned by hand without use of a spanner wrench. Install the spacer, spring (conical shaped) washer, lockwasher, and impeller locknut on the shaft and tighten by hand until all clearance has been taken up in the assembly. Make sure the spring washer is installed so the concave side is towards the impeller as shown in Figure 29.

Figure 21

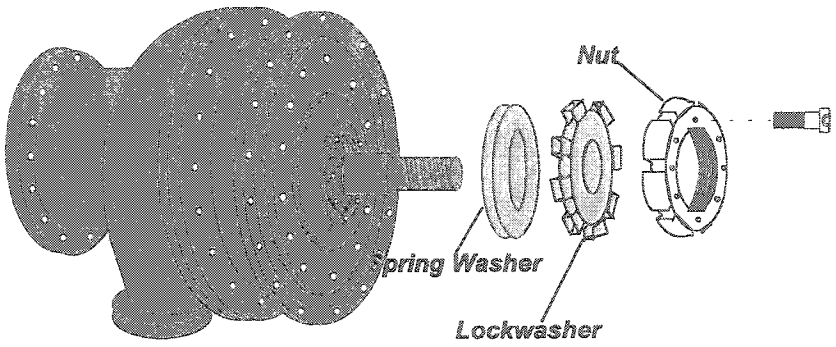

(h) Rotate the shaft so that the 1st stage impeller key is at the 12 o'clock position.

(i) Some compressors have a balance/locknut with weights. If all original compressor components (motor/rotor, impellers, spacers etc.) are being re-used, then the original weights may be left on the balance nut. Once the locknut has been hand tightened, place a mark on the locknut and the impeller hub. Tighten the locknut the required rotation as described below.

Small Locknut:

Once hand tightened, the small locknut (less than 2.500") should be rotated another 360-390 degrees using a spanner wrench and brass hammer or special socket and impact wrench. Use the marks described above to determine the rotation of the nut compared to the impeller. Once reaching 360 degrees of rotation, look for the next locking tab on the lockwasher that will fit into a notch in the locknut. Do not over-tighten the locknut as it is possible to cause shaft bending and run out, which could result in vibration problems.

Large Locknut:

Once hand tightened, the large locknut (greater than 4.000") should be rotated 170-180 degrees. Use the marks to determine the rotation of the nut compared to the impeller. Once reaching 170 degrees of rotation, look for the next locking tab n the lockwasher that will fit into a notch in the locknut. Do not over-tighten the locknut as it is possible to cause shaft bending and run out, which could result in vibration problems.

When reusing a locknut with it's original balance weights, make sure the match marks made during disassembly are aligned in their original position after the nut is tightened properly. See the Disassembly section.

IMPORTANT!: If the rotating components have been reused and the balance weights do not line up as originally marked, the balance weights should be removed.

Centravac General Service Literature

IMPORTANT!: If the rotating components have been replaced or were not marked during disassembly or do not line up as originally marked, the balance weights should be removed.

⚠ CAUTION

Once the locknut has been properly tightened, bend over a tab on the locking washer. It is recommended that a new lockwasher be used during re-assembly.

⚠ CAUTION

Compressor Damage!

Once a locking tab has been bent over on a lockwasher it may become weak and break off f the same tab is re-used. This could cause the impeller locknut to loosen and come off during operation, causing major damage to the compressor and motor.

(j) Check the impeller nose run out using a dial indicator with a magnetic base. Rotate the impeller and measure the maximum runout. The allowable maximum runout for fabricated (welded) impellers is .0050"and .0035"for cast style impellers.

(k) For shafts with the extension beyond the locknut or units with balance nuts, check the shaft runout after the locknut is tightened. Checking shaft runout on units without the balance nut or shaft extension will be difficult since the standard locknut does not have a smooth machined surface where the indicator can be used. Rotate the shaft and measure the maximum shaft runout. The allowable maximum shaft runout is .0012"

16 1st Stage Suction Cover Installation. (See Figure 22)

(a) Clean the cover and mating surface.

(b) Attach the lifting fixture to the suction cover and find the proper balance point.

(c) Apply Loctite 515 and an o-ring (when applicable) per recommended procedures.

(d) Install four guide pins to help align the suction cover. Make sure the scribe marks between the 2nd stage cover and 1st stage cover are lined up before final tightening of bolts.

(e) Install bolts and torque to 120-165 lb-ft.

Figure 22

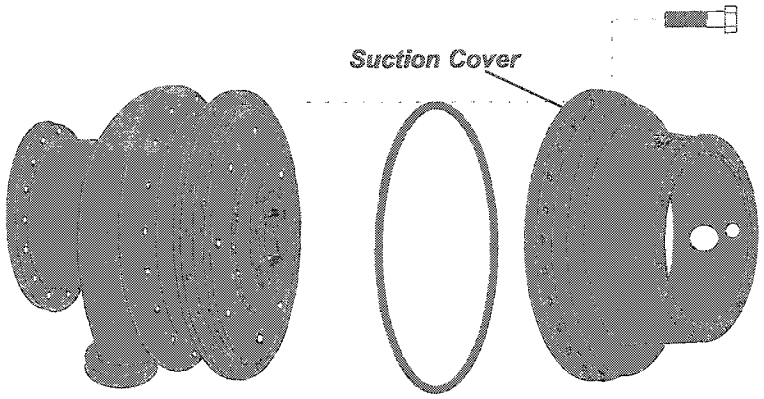

17 Impeller Nose Seal Installation (see Figure 23)

(a) Thoroughly clean the nose seal to remove any debris or loose chips from the labyrinth teeth.

(b) Use the original bolts and new locking tab washers.

(c) Using feeler gauges, center the seal around the nose of the impeller. The proper clearance can be found in Table 5.

(d) With the seal set properly, tighten the bolts to 20-27 lb-ft. Recheck the seal clearance.

(e) Rotate the shaft to ensure it rotates freely.

Figure 23

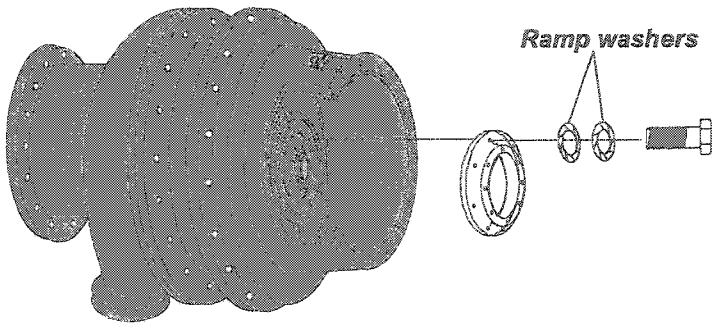

18 1st Stage Vane Assembly Installation.

(a) Thoroughly clean the vane assembly and check to ensure that the vanes move freely. Oil the vane bearings before installing.

(b) Use the special lifting tool described in the disassembly section to lift the vane assembly. Once the vanes are positioned in the housing, secure the vane assembly using a piece of L-angle and two bolts with washers. See Figure 24.

Centravac General Service Literature

Figure 24

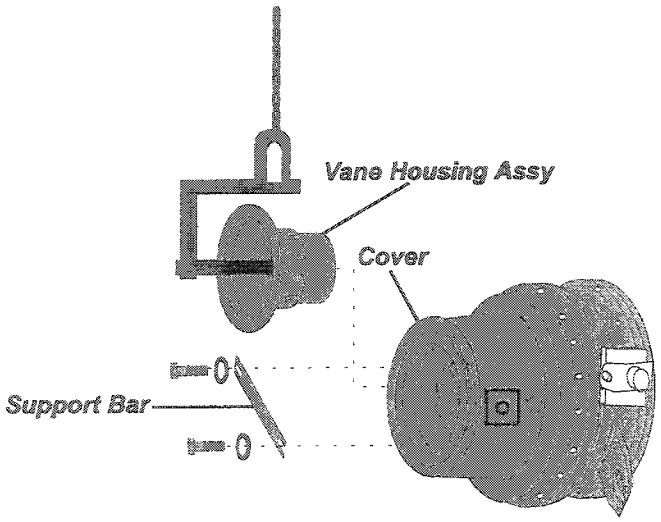

(c) Use three allen head setscrews to secure the inlet vane in the housing. Tighten the setscrews. See Figure 25.

(d) Install the 1st stage vane operator tang assembly using the marks placed on the operator lever and suction cover (with vanes closed) during disassembly to position the tang assembly (see Figure 25). It may be advisable to consider rebuilding of the operator using new o-rings, nylon bushings, and lip seal if applicable to eliminate a leak potential. The 1/8" NPT pipe plug should be removed and compressor oil poured into the area between the two internal o-rings to lubricate them. Replace the plug (see Figure 26).

Figure 25

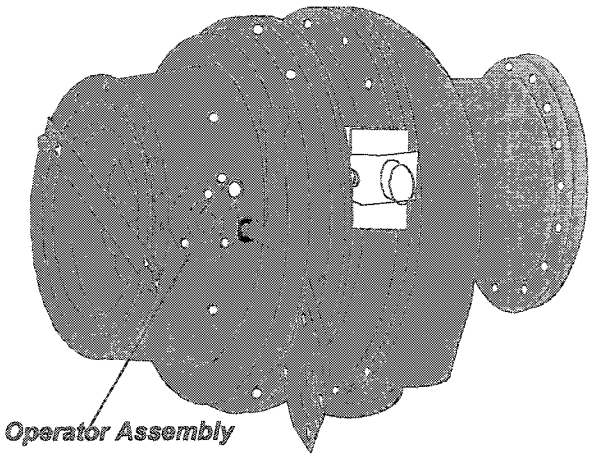

Figure 26

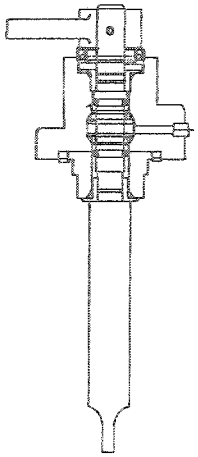

(e) Torque the tang operator mounting bolts to 14 lb-ft.

(f) *(f)*Remove the L-angle and bolts holding the vane assembly in the suction cover.

19 Air Run of Compressor For Balance.

(a) Run the compressor on air with the suction elbow off.

(b) Measure the vibration levels as indicated in *CVHE-SB-18* (latest revision) and, when required, trim balance the compressor to ensure proper balance.

20 Suction Elbow Installation.

(a) Clean the sealing surfaces on the suction elbow, evaporator, and suction cover flanges. The suction elbow must be properly insulated to prevent moisture from condensing. Insulation that was improperly applied or damaged may allow moisture to collect between the flanges and in the bolt holes. It may be necessary to use a bottoming tap to clean up the bolt holes before installing the elbow.

(b) Apply Loctite 515 and o-ring (when applicable) per recommended procedures. The lower flange at the evaporator requires Loctite. The upper suction elbow connection at the compressor suction cover should be installed with *no* sealant on the o-ring and a back-up Gore-Tex tape installed between the o-ring groove and the inner suction connection opening in the elbow. After installing the Gore-Tex tape, apply a small amount of petroleum jelly to the -ring to help hold it in place while installing the suction elbow. See *General Service Bulletin CTV-SB-66* (latest revision).

(c) Using a sling lift the suction elbow into position. Install bolts by hand making sure the flanges at the suction cover are square with the cover. *NOTE: All bolts should be coated with an anti-seize compound to help prevent rust.* Snug up the bolts slightly.

(d) Torque the bolts in the elbow to 120-165 lb-ft following the pattern shown in Figure 27. Ensure the elbow flange pulls up square to the suction cover and does not place a strain on the cover.

⚠ CAUTION

Compressor Damage!

Verify proper elbow flange fit. Failure to maintain proper suction elbow fit up can cause vibration problems or seal-to-impeller interference and possible damage to the impellers and compressor.

Figure 27

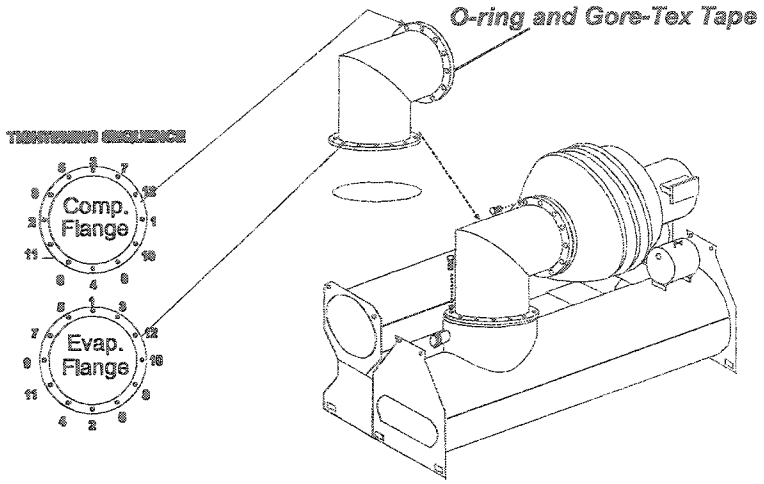

(e) The compressor should be run on air with the suction elbow installed. Refer to *General Service Bulletin CVHE-SB-18* (latest revision).

(f) See Step 23 when the unit-mounted starter is used.

21 Economizer Installation.

(a) Clean the flanges on the economizer, evaporator, and the condenser outlet pipe. The bolts holes on the evaporator flange may need to be cleaned up using a bottoming tap to remove rust. Some of the early vintage CVHF units may have used a four bolt flange at the evaporator for the larger size units. This was changed on later designs to eight bolts to ensure a better seal. It may be advisable to drill and tap the four additional holes in the evaporator flanges of early-production chillers to prevent leaks. The replacement gasket will have the four additional holes.

(b) Using a sling on either end of the economizer, move the economizer into position. See Figure 28.

Figure 28

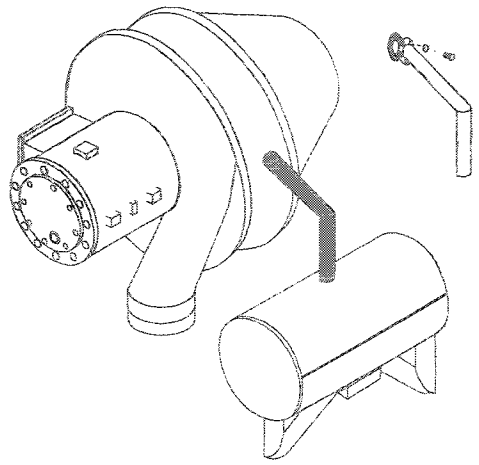

(c) Coat the threads of the bolts for the evaporator flange with an anti-seize compound.

(d) Evenly tighten the bolts to 14 -16 lb-ft. See Figure 29. Do not overtighten or cause the gasket to extrude from between the flanges.

Figure 29

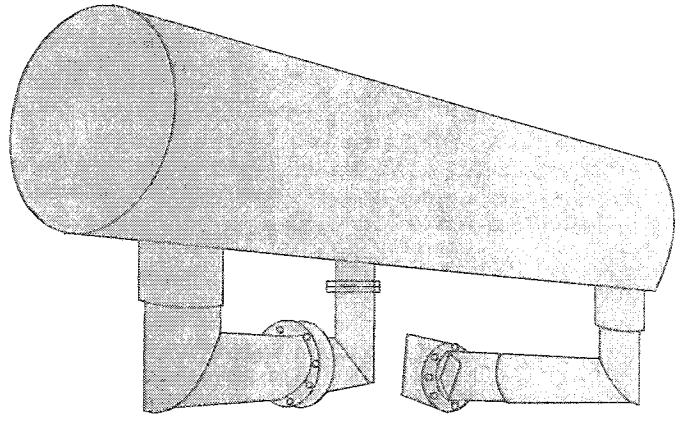

22 Inlet Vane Linkage Installation.

(a) Attach the linkage assembly brackets to the compressor casings. The outline of the mounting brackets should have been scribed on the casings to align the brackets in their original position.

IMPORTANT! Maintaining the proper vane schedule between stages is important. Mis-adjustment of the vanes can cause gas flow turbulence at certain compressor load points resulting in noise and vibration. This problem is usually an indication that the final stage vane assembly has lagged behind the 1st stage vane position.

Centravac General Service Literature

Adjustment of the vane assembly brackets on the compressor casings or length of linkage rods may resolve this condition.

(b) Reconnect the drive rods to the vane operator arms. See Figure 30.

Figure 30

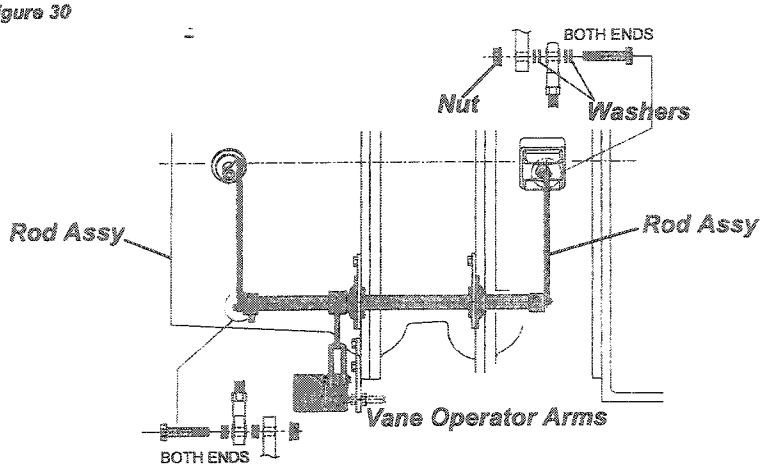

(c) Open and close the vanes to ensure they operate freely.

23 Unit Mounted Starter Installation.

(a) Clean off the flange on the motor housing and transition piece between the starter and motor housing.

(b) Use a new gasket between the transition piece that bolts to the motor terminal board casting flange. See Figure 31.

Figure 31

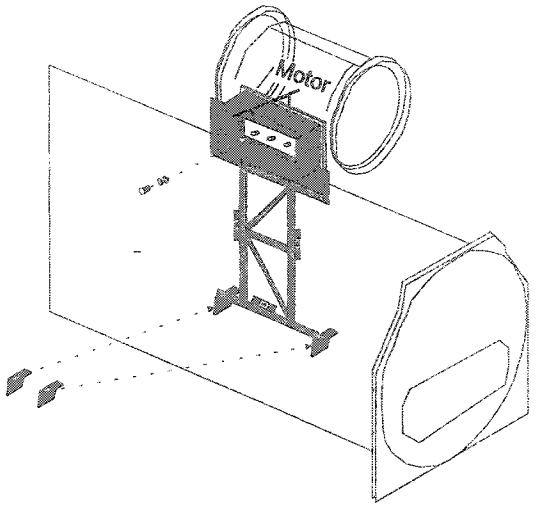

(c) Lift the unit mounted starter into position using the eye bolts in top of starter.

(d) Bolt the starter to the motor housing flange and the lower evaporator mounting brackets.

(e) Re-attach the motor leads to the motor terminal studs. The leads and motor studs should have been marked during disassembly. Torque clamp connectors to 27 lb-ft.

24 Motor Cooling Lines.

(a) Clean the motor cooling line flanges and motor housing.

(b) Install the motor cooling orifice between the flange and motor housing with a gasket on either side of the orifice. The motor cooling orifice is a flat piece of steel with a stamped hole in the center of a specific diameter matching the motor size and horsepower.

(c) Install the drain lines using new gaskets.

(d) Tighten the bolts.

25 Oil Supply Line Orifice.

(a) The oil supply line for the ball bearing end has an orifice at the motor housing.

The orifice is threaded into the motor end bell. The orifice limits the amount of oil that is supplied to the ball bearing. Installing the oil supply line without the proper orifice may lead to excessive oil flow through the bearing cavity and possible oil loss.

Table 2
CVHF/CDHF Compressor/Component Weights

Unit Type	Unit/Comp Size	Economizer (std, less free cooling)	Suction Elbow	1st Stage Inlet Vane	1st Stage Suction Cover	Impellers All Stages	2nd Stage Alum Vane Plate	2nd Stage Casing	2nd Stage Inlet Vanes and Plate	Steel Volute Diffuser Plate	Discharge Volute	Complete Compressor Including Motor
CVHF	350-485	700 lb. (318 kg.)	494 lb. (224 kg.)	295 lb. (134 kg.)	1400 lb. (635 kg.)	64 lb. (29 kg.)	190 lb. (86 kg.)	1400 lb. (635 kg.)	82 lb. (37 kg.)	289 lb (131 kg.)	1336 lb. (606 kg.)	7610 lb. (3452 kg.)
CVHF	555-640	700 lb. (318 kg.)	494 lb. (224 kg.)	311 lb. (141 kg.)	1740 lb. (789 kg.)	64 lb. (29 kg.)	190 lb. (86 kg.)	1840 lb. (835 kg.)	88 lb. (40 kg.)	356 lb. (161 kg.)	1418 lb. (643 kg.)	8230 lb. (3733 kg.)
CVHF	650-910	836 lb. (379 kg.)	688 lb. (312 kg.)	408 lb. (185 kg.)	1690 lb. (767 kg.)	70 lb. (32 kg.)	190 lb. (86 kg.)	1990 lb. (903 kg.)	88 lb. (40 kg.)	309 lb. (140 kg.)	1430 lb. (649 kg.)	9200 lb. (4173 kg.)
CVHF	1060-1280	836 lb. (379 kg.)	688 lb. (312 kg.)	425 lb. (193 kg.)	1718 lb. (779 kg.)	70 lb. (32 kg.)	190 lb. (86 kg.)	2010 lb. (912 kg.)	94 lb. (43 kg.)	309 lb. (140 kg.)	1820 lb. (826 kg.)	9800 lb. (4445 kg.)
CVHF (ext cap)	1470-1720	836 lb. (379 kg.)	1000 lb. (454 kg.)	750 lb. (340 kg.)	2133 lb. (968 kg.)	100 lb. (45 kg.)	290 lb. (132 kg.)	2210 lb. (1002 kg.)	300 lb. (136 kg.)	712 lb. (323 kg.)	2250 lb. (1021 kg.)	13120 lb. (5951 kg.)
CDHF	1500	836 lb. (379 kg.)	688 lb. (312 kg.)	See Compressor Size CVHF 650-910								
CDHF	2000	836 lbs (379 kg.)	688 lb. (312 kg.)	See Compressor Size CVHF 650-910								
CDHF	2100	836 lbs (379 kg.)	688 lb. (312 kg.)	See Compressor Size CVHF 1060-1280								
CDHF	2500	836 lbs (379 kg.)	688 lb. (312 kg.)	See Compressor Size CVHF 1060-1280								

Centravac General Service Literature

Table 3
Bolt Torques (Metal to Metal Flanges) Grade 5 Bolt

Size	Thread TPI/Class	Torque (lb.-ft.)*	
		Minimum	Maximum
¼"	UNC 20	5	7
5/16"	UNC 18	11	15
3/8"	UNC 16	20	27
½"	UNC 13	55	75
5/8"	UNC 11	120.	165
3/4"	UNC 10	200	280
1"	UNC 8	400	550

Table 4
Centravac Motor Weights

Unit Type	Unit/ Compressor Size (60Hz)	Low Voltage (208-600 Volts)	High Voltage (2300-6600 Volts)
CVHF	350-485	2637 lb. (1196 kg.)	2806 lb. (1273 kg.)
CVHF	555-640	2833 lb. (1285 kg.)	2936 lb. (1332 kg.)
CVHF	650-910	3887 lb. (1763 kg.)	3923 lb. (1779 kg.)
CVHF	1060-1280	4439 lb. (2013 kg.)	4713 lb. (2138 kg.)
CDHF	1500	3887 lb. (1763 kg.)	3923 lb. (1779 kg.)
CDHF	2000	3887 lb. (1763 kg.)	3923 lb. (1779 kg.)
CDHF	2100	4439 lb. (2013 kg.)	4713 lb. (2138 kg.)
CDHF	2500	4439 lb. (2013 kg.)	4713 lb. (2138 kg.)

Note: Weights shown are for the largest motor available in the compressor size.

Table 5
CVHF/CDHF Impeller Clearances

Unit Model and Size	1st and 2nd Stage Impeller Nose Seal
CVHF and CDHF (all)	0.0100"-0.0180"

Centravac General Service Literature

Compressor/Motor Record Sheet

Job Name:	*Disassembly:*	*CVHE:*
Technician:	*Assembly:*	*CVHF:*
Date:	*City:*	*CVHG:*
Unit Model:	*Serial #:*	

(in.)	*1st Stage Impeller Seal Clearance*
(in.)	*1st Stage Impeller Nose Runout*
(in.)	*1st Stage Impeller OD. to Diffuser Clearance*
(in.)	*Shaft Runout (TIR)*
(in.)	*1st Stage Spacer Seal Clearance*
(in.)	*2nd Stage Impeller Seal Clearance*
(in.)	*2nd Stage Impeller Nose Runout*
(in.)	*2nd Stage Impeller OD. To Diffuser Clearance*
(in.)	*2nd Stage Spacer Seal Clearance*
(in.) 12:00	*Oil Seal Clearance (Record 4 Places)*
(in.) 6:00	
(in.) 3:00	
(in.) 9:00	

Air-Run (Elbow Off)	*(in./sec. H)*	*(in./sec. V)*	*(in./sec. A)*
Air-Run (Elbow On)	*(in./sec. H)*	*(in./sec. V)*	*(in./sec. A)*
Freon-Run	*(in./sec. H)*	*(in./sec. V)*	*(in./sec. A)*

Comments:

Figure 32
Cross sectional cut-away view of a 2-stage CVHF compressor/motor assembly

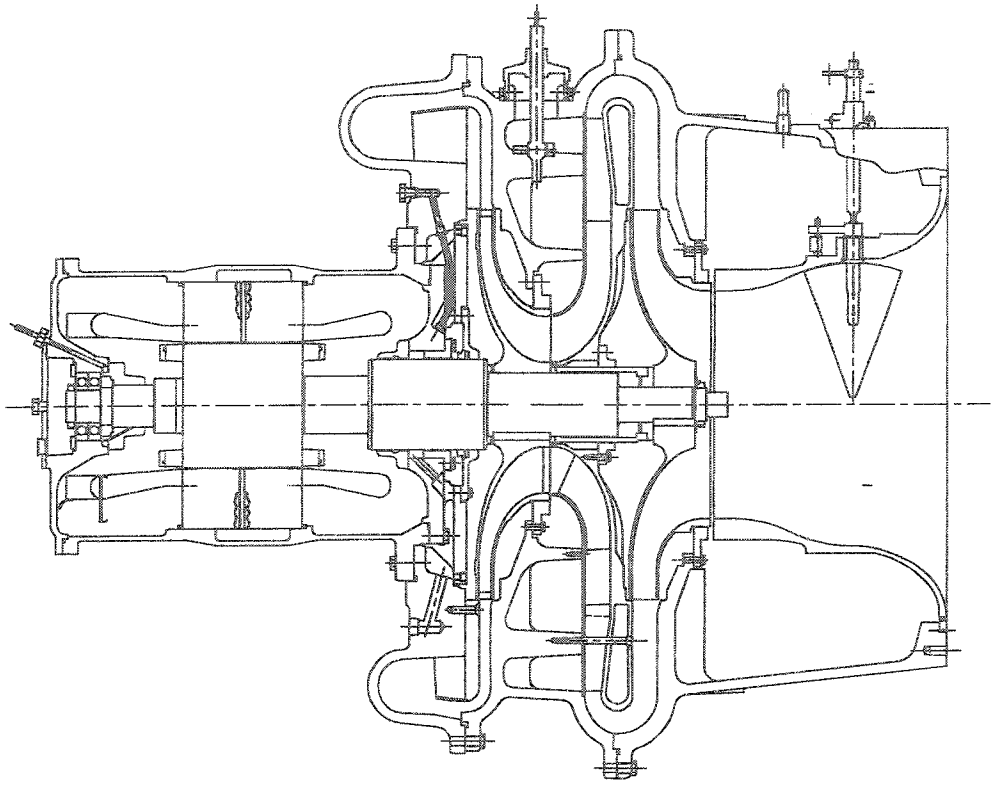

entech

3404 GARDEN BROOK DRIVE • DALLAS, TX 75234 • (214) 241-8188

Torque Values

1st stage vane arm assembly bolts	14 ft-lbs
Lab seal bolts	24 ft-lbs
Suction cover bolts (all stages)	150 ft-lbs
Impeller lock nut	115 ft-lbs
2nd & 3rd stage shroud bolts (use loctite on 2nd stage bolts)	6 ft-lbs
Oil seal bolts	24 ft-lbs
Motor thrust bearing locknut (multi-step method)	250 ft-lbs
Bearing bracket bolts	150 ft-lbs
Inner bearing seal bolts	24 ft-lbs
Oil pump cover bolts	100 ft-lbs
Diffuser plate socket head cap screws	24 ft-lbs
3rd stage vane operator assembly	60 ft-lbs
1st & 2nd stage diffuser plate	24 ft-lbs
Thrust bearing retaining ring bolts	24 ft-lbs
Terminal board bolts	25 ft-lbs

TABLE 1 — Recommended Bolt Torques (Ft. Lbs.)

Cap Screws		SAE* Grade 5	Hex Socket Head Screws	
1/4	20 UNC 28 UNF	6 7	1/4 - 20	5.4
5/16	18 UNC 24 UNF	14 16	5/16 - 24	10.3
3/8	16 UNC 24 UNF	24 28	5/16 - 18	10.3
7/16	14 UNC 20 UNF	52 61	3/8 - 24	18.1
1/2	13 UNC 20 UNF	69 83	1/2 - 13	38.9
9/16	12 UNC 18 UNF	99 118	5/8 - 11	76.5
5/8	11 UNC 18 UNF	150 176	3/4 - 10	134
3/4	10 UNC 16 UNF	254 301	7/8 - 9	312

*Grade 5 bolts have 3 radial slashes

3404 GARDEN BROOK DRIVE • DALLAS, TX 75234 • (214) 241-8188

Tol 89 Hole Designations

Hole #	Compressor Size	Casting
1	020	Suction Cover
2	032	Suction Cover
3	050	Suction Cover
4	080	Suction Cover
5	125	Suction Cover
6	020	2nd Stage Casting
6	020	3rd Stage Casting
6	032	3rd Stage Casting
7	032	2nd Stage Casting
8	050	3rd Stage Casting
9	050	2nd Stage Casting
9	080	3rd Stage Casting
10	080	2nd Stage Casting
11	125	2nd Stage Casting
11	125	3rd Stage Casting

Tol 89 - Castings
Tol 100 - Inlet Vanes
Tol 98A - Bearing Alignment
Tol 98B - Bearing Alignment

DESIGN A & B

IMPELLER SEAL RING CLEARANCE			
COMPR SIZE	1ST STG	2ND STG	3RD STG
013 thru 014	.0295/.0195	.024/.0165	.024/.0165
015 thru 020	.0295/.0195	.0295/.0195	0.24/0.165
022	.0295/.0195	.0295/.0195	.0295/.0195
023 thru 032	.033/.022	.0295/.0195	.0295/.0195
035	.033/.022	.033/.022	.0295/.0195
036 thru 045	.0365/.0245	.033/.022	.0295/.0195
049 thru 050	.0365/.0245	.033/.022	.033/.022
055	.0365/.0245	.0365/.0245	.033/.022
056 thru 071	.043/.0285	.0365/.0245	.033/.022
079 thru 080	.043/.0285	.0365/.0245	.0365/.0245
089 thru 112	.046/.031	.043/.0285	.0365/.0245
125	.046/.031	.043/.0285/.043/	
	.0285		
Seal To Shaft .0005/.003 All Sizes			

IMPELLER SEAL RING CLEARANCE			
COMPR SIZE	1ST STG	2ND STG	3RD STG
013 thru 014	.0295/.0195	.024/.0165	.024/.0165
015 thru 020		.0295/.0195	
022			.0295/.0195
023 thru 032	.033/.022		
035		.033/.022	
036 thru 045	.0365/.0245		
049 thru 050			.033/.022
055		.0365/.0245	
056 thru 071	.043/.0285		
079 thru 080			.0365/.0245
089 thru 112	.046/.031	.043/.0285	
125			.043/.0285
SHAFT TO SEAL CLEARANCES 1ST STAGE — 0.018/0.024 IN. 2ND STAGE — 0.018/0.024 IN. 3RD STAGE — 0.002/0.004 IN.			

	MINIMUM/MAXIMUM DIMENSION (INCHES)
Key	0.498/0.500
Shaft Keyway	0.5005/0.5035
Impeller Keyway	0.5010/0.5030

MOTOR FRAME SIZE	THRUST BEARING BEARING I.D. MIN./MAX.	SHAFT O.D. MIN./MAX.	JOURNAL BEARING BEARING I.D. MIN./MAX.	SHAFT O.D.
1500,1700	2.1648/2.1654	2.1650/2.1655	5.6050/5.6065	5.5995/5.6000
SOME 1700* ALL 1900 AND LARGER	3.5425/3.5433	3.5429/3.5434	6.4050/6.4065	6.3995/6.4000

*APPLIES ONLY TO JOURNAL BEARING/SHAFT DIMENSION

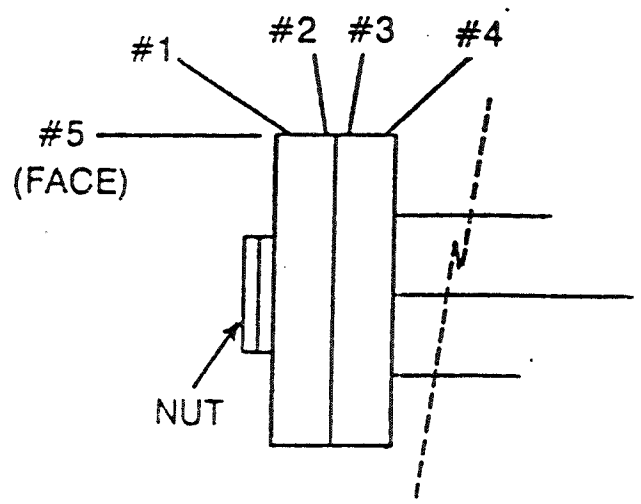

#1 TIR _____

#2 TIR _____

#3 TIR _____

#4 TIR _____

#5 (FACE) TIR _____

T. I. R. Thrust Bearing Runout	Max.	.0015
Maximum Difference on Runout Reading		.0002

MODEL	COMPRESSOR	EVAP.	CONDENSER	REFRIGERANT CHARGE (LBS.) R-11	OIL CHARGE (GAL.)	SHIPPING WEIGHT (LBS.)	OPERATING WEIGHT (LBS.)	SHELL AND WATER BOX VOLUME EVAP. (GAL.)	SHELL AND WATER BOX VOLUME CONDENS (GAL.)
CVHE	020	2C	2C	340	7	9,960	10,860	31	33
CVHE	020	2D	2D	450	7	10,520	11,760	39	41
CVHE	032	2C	2C	560	7	11,820	13,220	47	54
CVHE	032	2D	2D	750	7	12,750	14,540	60	68
CVHE	050	2C	2C	760	7	15,130	17,190	76	87
CVHE	050	2D	2D	1,000	7	16,460	19,090	97	109
CVHE	080	2C	2C	1,000	7	22,470	25,550	123	144
CVHE	080	2D	2D	1,320	7	24,700	28,620	156	179
CVHE	125	3D	2D	2,360	7	34,370	40,640	231	278
CVHE	125	2D	2D	2,390	7	37,740	41,200	253	278

COMPRESSOR MODEL	COMPONENT NAME	WEIGHT (LBS.)
CVHE 020	Volute	800
	First Stage Suction Cover	715
	Second Stage Suction Cover	820
	Third Stage Suction Cover	768
	Total Compressor Weight	5,665
CVHE 032	Volute	793
	First Stage Suction Cover	1,008
	Second Stage Suction Cover	719
	Third Stage Suction Cover	742
	Total Compressor Weight	6,880
CVHE 050	Volute	910
	First Stage Suction Cover	1,050
	Second Stage Suction Cover	875
	Third Stage Suction Cover	775
	Total Compressor Weight	7,300
CVHE 080	Volute	1,110
	First Stage Suction Cover	1,145
	Second Stage Suction Cover	1,132
	Third Stage Suction Cover	880
	Total Compressor Weight	9,175
CVHE 125	Volute	1,608
	First Stage Suction Cover	1,285
	Second Stage Suction Cover	1,257
	Third Stage Suction Cover	1,200
	Total Compressor Weight	11,125

IMPELLER NOSE RUNOUT
1ST, 2ND, 3RD STAGE
MUST NOT EXCEED
.003

SHAFT RUNOUT
MUST NOT EXCEED
.0012 T. I. R.

IMPELLER TO DIFFUSER CLEARANCE
.000 TO .005 SURFACE
.030 Radial

			NOMINAL VOLTAGE	200	208	440	460	480	575	600	2300	2400	4000	4160
UNIT COMPRESSOR DESIGNATION	MOTOR DESIGNATOR	AVAILABLE MOTOR RATING (Kw)	VOLTAGE UTILIZATION RANGE	187/229	187/229	414/506	414/506	414/506	540/660	540/660	2160/2640	2160/2640	3744/4576	3744/4576
CVHE 055-080	N	323	Rated Load Amps	1018	979	462	442	424	359	344	89.8	86.1	51.7	49.7
			Locked Rotor Amps	5649	5875	2541	2657	2773	1550	1617	449	468	260	270
	P	361	Rated Load Amps			515	493	472	402	385	99.4	95.3	57.2	55.0
			Locked Rotor Amps			2541	2657	2773	1550	1617	485	506	281	292
	R	403	Rated Load Amps			580	555	532	445	426	111.8	107.1	64.3	61.8
			Locked Rotor Amps			2541	2657	2773	1954	2039	542	565	314	326
	T	453	Rated Load Amps			667	635	609	508	487	128.3	123.0	73.8	71.0
			Locked Rotor Amps			3326	3477	3528	2580	2692	601	627	348	362
	U	513	Rated Load Amps			752	719	689	576	552	145.0	139.0	83.7	80.5
			Locked Rotor Amps			3326	3477	3528	2580	2692	601	627	348	362
	V	586	Rated Load Amps			859	822	788	658	631	164.9	158.0	95.2	91.5
			Locked Rotor Amps			3694	3862	4030	2816	2938	701	731	406	422
	W	653	Rated Load Amps			952	911	873	727	697	182.6	175.0	105.0	101.0
			Locked Rotor Amps			4916	5139	5362	3616	3773	821	857	476	495
CVHE 089-125	U	513	Rated Load Amps			749	716	686	574	550	143.5	138.0	82.8	79.6
			Locked Rotor Amps			4448	4650	4852	3528	3681	766	797	442	460
	V	586	Rated Load Amps			854	817	783	655	628	164.3	158.0	94.6	91.0
			Locked Rotor Amps			4448	4650	4852	3528	3681	766	797	442	460
	W	653	Rated Load Amps			952	911	873	727	697	182.6	175.0	105.0	101.0
			Locked Rotor Amps			4916	5139	5362	3616	3773	821	857	476	495
	X	742	Rated Load Amps			1080	1033	990	830	795	210	201	121	116
			Locked Rotor Amps			5618	5873	6128	4534	4731	849	886	491	511
	Y	853	Rated Load Amps			1242	1188	1139	951	911	240	230	138	133
			Locked Rotor Amps			6554	6852	7150	5062	5282	1141	1191	661	687
	Z	954	Rated Load Amps			1393	1332	1277	1063	1019	269	258	155	149
			Locked Rotor Amps			7714	8065	8416	5668	5914	1141	1191	661	687
CVHB 125-155	1	857	Rated Load Amps			1232	1183	1140	944	909	237	229	137	132
			Locked Rotor Amps			6230	6500	6850	4644	4850	1000	1039	577	600
	2	931	Rated Load Amps			1329	1278	1237	1025	986	262	251	151	145
			Locked Rotor Amps			7080	7450	7830	5460	5700	1211	1264	702	730
	3	1014	Rated Load Amps			1489	1415	1371	1125	1084	287	276	165	159
			Locked Rotor Amps			8120	8580	9020	5990	6250	1345	1403	779	810
	4	1180	Rated Load Amps			1678	1618	1557	1294	1244	333	319	191	184
			Locked Rotor Amps			8700	9090	9490	7270	7590	1533	1600	889	925

UNIT COMPRESSOR DESIGNATION	MOTOR DESIGNATOR	AVAILABLE MOTOR RATING (kW)	NOMINAL VOLTAGE	200	208	440	460	480	575	600	2300	2400	4000	4160
			VOLTAGE UTILIZATION RANGE	187/229	187/229	414/506	414/506	414/506	540/660	540/660	2160/2640	2160/2640	3744/4576	3744/4576
CVHE 013-020	A	96	Rated Load Amps	314	302	142	136	130	107	103				
			Locked Rotor Amps	2154	2240	995	1040	1085	763	796				
	B	105	Rated Load Amps	342	329	155	148	142	117	112				
			Locked Rotor Amps	2154	2240	995	1040	1085	763	796				
	C	118	Rated Load Amps	379	364	172	164	157	131	126				
			Locked Rotor Amps	2154	2240	995	1040	1085	763	796				
	D	131	Rated Load Amps	419	403	190	182	174	146	140				
			Locked Rotor Amps	2154	2240	995	1040	1085	763	796				
	E	142	Rated Load Amps	464	446	210	201	193	159	152				
			Locked Rotor Amps	2862	2976	1239	1295	1351	958	1000				
	F	155	Rated Load Amps	503	484	228	218	209	173	166				
			Locked Rotor Amps	2862	2976	1239	1295	1351	958	1000				
	G	172	Rated Load Amps	553	532	251	240	230	192	184				
			Locked Rotor Amps	2862	2976	1239	1295	1351	958	1000				
CVHE 022-032	E	142	Rated Load Amps	464	446	203	196	188	159	152				
			Locked Rotor Amps	3014	3135	1349	1410	1471	1045	1090				
	F	155	Rated Load Amps	501	482	224	214	205	173	166				
			Locked Rotor Amps	3014	3135	1349	1410	1471	1045	1090				
	G	172	Rated Load Amps	551	530	248	237	227	192	184				
			Locked Rotor Amps	3014	3135	1349	1410	1471	1045	1090				
	H	184	Rated Load Amps	604	581	272	260	249	206	197				
			Locked Rotor Amps	4003	4163	1679	1755	1831	1272	1327				
	J	204	Rated Load Amps	662	637	299	288	274	229	218				
			Locked Rotor Amps	4003	4163	1679	1755	1831	1272	1327				
	K	230	Rated Load Amps	744	715	337	322	309	257	246				
			Locked Rotor Amps	4003	4163	1679	1755	1831	1272	1327				
	L	256	Rated Load Amps	820	788	373	357	342	296	274				
			Locked Rotor Amps	3880	4035	1720	1798	1876	1261	1316				
CVHE 035-050	J	204	Rated Load Amps	654	629	295	282	270	225	216				
			Locked Rotor Amps	4610	4794	1971	2060	2150	1466	1530				
	K	230	Rated Load Amps	732	704	333	318	305	254	243	63.9	61.2	36.7	35.3
			Locked Rotor Amps	4610	4794	1971	2060	2150	1466	1530	347	362	201	209
	L	256	Rated Load Amps	815	784	370	354	340	283	271	71.1	68.1	40.9	39.3
			Locked Rotor Amps	4610	4794	1971	2060	2150	1466	1530	347	362	201	209
	M	284	Rated Load Amps	916	881	415	397	380	316	303	79.2	75.9	45.6	43.8
			Locked Rotor Amps	4495	4675	2023	2115	2207	1550	1617	376	392	217	226
	N	323	Rated Load Amps	1037	997	469	449	430	359	344	90.1	86.3	51.8	49.8
			Locked Rotor Amps	4495	4675	2023	2115	2207	1550	1617	408	426	237	246
	P	361	Rated Load Amps			525	502	481	402	385	99.4	95.3	57.2	55.0
			Locked Rotor Amps			2023	2115	2207	1550	1617	485	506	281	292
	R	403	Rated Load Amps			580	555	532	445	426	111.8	107.1	64.3	61.8
			Locked Rotor Amps			2541	2657	2773	1954	2039	542	585	314	326

MOTOR/COMPRESSOR TEARDOWN HANDOUT

Objectives:

1. To present the proper sequence and procedures for the teardown of the motor assembly.
2. To provide techniques for unusual installations.
3. Provide a comparison of the various bearing assemblies.
4. Provide a cutaway of the motor/compressor assembly.
5. Miscellaneous assembly - disassembly techniques.

Identification of components can be made by the cutaway drawing shown in Figure 1.

For procedures not covered in this handout, refer to the appropriate service literature.

MOTOR TEARDOWN

This handout describes the changeout of the CVHE motor rotor and/or bearings. This generally can be done without removing the motor from the chiller. The motor orientation in this procedure will be drive end (shaft extension end or compressor end) and opposite drive end, motor terminal end or thrust end. In general, the compressor must be disassembled before any work is done on the motor. The exception to this is the removal of the thrust bearing, which can be done without disassembly of the compressor.

DISASSEMBLY

1. Disconnect 1/4 inch copper bearing supply line on the drive end. Either unsweat the line or cut the line (if cut, a coupling will be needed for reassembly).
2. Check the rotor shaft runout as close to the bearing as possible.
3. Support the rotor shaft approximately 1/2 of the bearing clearance with a jack or other means of support. See Figure 2.
   NOTE: The shaft must never be lifted by a sling or chain ball assembly as this could bend the shaft. The movement of the shaft should be monitored with a dial indicator.
4. Remove the bolts securing the drive end bearing. Refer to Figure 3. Care must be taken to prevent damage to the babbitt bearing as well as the shaft. Remove the bearing using the jack bolt holes. Rest the bearing temporarily on the shaft with the proper shaft and bearing protection. Refer to Figure 4.
5. Remove the six socket head screws that hold the bearing seal in place.
6. Remove the oil supply and drain lines on the opposite drive end of the motor. To aid in reassembly, the paint should be removed prior to cutting.
7. See Figure 5. Remove the opposite drive end bearing inspection plate.
8. See Figure 6. Loosen the retaining bolts holding the motor end bearing bracket. Remove two of the bolts, replace them with guide pins. Guide pins are recommended to help support the weight of the bracket and shaft.
9. Remove bearing retaining ring as indicated in Figure 7.
10. Remove the eight socket head screws holding the opposite drive end bearing seal. Refer to Figure 8.
11. Using the jack bolt holes, remove the opposite end bearing jacket. The bearing bracket will need to be slid over the ball bearings. This will involve a gentle rocking action back and forth to slide the bearing bracket over the outer race of the bearing. Extreme care must be exercised at this point to prevent the bearing bracket from jamming on the bearings and to prevent the moving of the rotor assembly which could damage the stator. Refer to Figure 9. It is also recommended that opposite drive end bearing bracket be supported with the chain fall or crane to support the weight.
12. Remove the thrust bearing lockwasher and locknut. Refer to Figures 10 and 11. This is accomplished by bending back the lockwasher tab using spanner wrench to drive off the locknut.
13. Remove the thrust bearing. Refer to Figure 12. This is done by using a bearing puller. The puller must pull on the inner race of the back bearing. Care must be taken to prevent damage to the shaft and the bearing. Important items to remember are:
    a. The puller must be square with respect to the shaft.
    b. The puller should pull on the inner race. Use .050 shims between the puller and the inner race.
    c. The bearing must be protected from damage.
    d. Never heat the bearing to remove it, as this could cause damage to the bearing or motor.
    e. The weight of the puller should be supported by a sling and chain fall.

14. Remove the inner bearing cap or seal. Care should be taken to prevent damage to the gasket. Note that there is an oil drain hole on the bottom. This should be marked and emphasized that it is installed with the drain hole on the bottom.
15. Remove the drive end seal bolts. Before this is done, the shaft support can be removed.
16. Refer to Figure 13. Once the seal bolts have been removed, remove the bearing bracket. In removal of the drive end bearing bracket guide pins are recommended to support weight of the bracket.
17. To remove the rotor, cover the shaft extension with a pipe (brass or aluminum) to protect the shaft. Sling as close to the rotor as possible. Raise the rigging to support the weight of the rotor. Care must be taken to prevent damage to the motor windings.

ASSEMBLY

1. Install the rotor. Cover the shaft extension with the brass or aluminum pipe to protect the shaft and to balance the motor. Sling the rotor into place.
2. Position the rotor such that the end of the lamination of the motor and stator are aligned. After the rotor is aligned, allow the rotor to rest on the stator. At this point, caution must be taken to prevent any damage to the windings.
3. Refer to Figure 14. Place the opposite drive end inner bearing cap and new gasket on the shaft. During reassembly, all new components should be cleaned and inspected for damage, replace as necessary. The oil drain should be at the bottom.
4. Install the thrust bearings.
   NOTE: Bearings must be installed back to back. This can be determined by looking at the cages of the bearings. It can also be determined by the races. Refer to Figure 15.
   a. Remove any nicks or burrs before installation. Polish the bearing surface on the shaft with crocus cloth. Check for high spots with a micrometer. Then thoroughly clean all components.
   b. Refer to Figures 16, 17 and 18. Heat the bearings to 220° with a convection oven. Do not exceed 250° as this will result in damage to the bearings. Use a "tempil" stick to indicate temperature. Install the bearings on the shaft back to back. (NOTE: If the bearing is marked as having a high spot, align the marks on the inner and outer race with each other. If both bearings have high spots marked, turn the outer bearing so the high spots are 180° from the high spots on the inner bearing.) Install the lockwasher and locknut. Tighten hand tight with a spanner wrench. Allow bearings to cool.
   c. Assemble the alignment sleeve. Tighten sleeve bolts to 14 ft-lbs. if the bearings do not spin freely, remove the sleeve and reposition.
   d. Tighten the locknut to 250 ft-lbs. while turning the bearings with the alignment sleeve.
   e. Check the total indicated runout of the bearings. Maximum TIR is .0015 inches. Compare the runout for each race. The runout for each side of the race should not exceed .0002 inches.
   f. If any test fails, remove the bearings and repeat the bearing alignment procedure. If the test fails a second time, replace the bearings.
5. Install all thread rods or guide pins into the seal. Align the seal so that the drain hole is on the bottom. Refer to Figure 20.
6. Lift the opposite drive end bearing bracket into place. The bearing bracket should be positioned on guide pins to support the weight.
   NOTE: The all-thread rod must go through the bolt holes in the bearing bracket to align the inner seal.
7. Align the edge of the bearing with the edge of the bearing bracket.

8. Mic the drive end of the shaft and surface and the babbitt bearing for proper clearance. Refer to Figures 22 and 23.
9. Install the guide pins to support the drive end bearing bracket.
10. Install the all-thread to hold the inner bearing cap/oil seal in place.
    NOTE: Take note to insure that the oil drain hole is on the bottom.
11. Slide the drive end bearing bracket into place (as indicate in Figure 24).
12. Slide the bearing onto the shaft resting it prior to the bearing surface of the shaft.
13. Support the surface with a jack or similar device until the bearing is aligned and will slide in easily (as shown in Figure 25). At this point, it will be necessary to go to the opposite drive end of the motor to install the thrust bearing bracket.
14. Work the bearing bracket into place and snug down all the bolts.
15. Return to the drive end of the motor and work the babbitt bearing into place. Insert the bolts and tighten (refer to Figure 26). Again support the shaft assembly with a jack prior to installation.
16. Once the drive end bearing is in place, secure the opposite drive end bearing bracket.
17. Set the drive end inner bearing seal in place. This is done by inserting two socket-head capscrews to hold the seal firmly. The seal is then located and adjusted by moving the all-thread up or down (as shown in Figure 27). Once it is located, the seal should be firmly snug.
18. A similar adjustment should be made to the opposite end drive the bearing seal (refer to Figure 28). The remaining cap screws should then be put in place and firmly tightened on both seals (refer to Figure 29).
19. Install the bearing retaining rings and bolts and tighten (as shown in Figure 30).
    NOTE: The inner seal/cap must be aligned and installed before the retaining ring. Replace the inspection cover (as shown in Figure 31).
20. Add oil to the inlet sides of both bearings and rotate the rotor assembly. The oil will help lubricate and prevent corrosion on the bearings.
21. Reassemble the bearing supply and drain lines. At this point, the rotor runout should be checked. There should not be any end play.
22. The assembly is now set for compressor reassembly.

REMOVAL OF MOTOR/COMPRESSOR ASSEMBLY

Many installation sites require the compressor assembly to be removed prior to installation. The following is the recommended procedure for the removal and reassembly of the motor/compressor assembly.

1. It is recommended before removing the assembly to have it dowelled into place. The preferred method is to have the assembly dowelled into place on the production line. If this is not the case, the assembly must be dowelled into place per Figure 32. Refer to Table 1 for dowel sizes.
2. Field dowelling (locations shown in Figure 32) is needed to prevent shifting of the various components as well as alignment for reassembly. Basically the procedure involves two dowels per flange and mounting location.
3. Remove external components. This includes vane linkage, vent lines, motor cooling supply and drain lines, econimizer bolts, etc. Refer to the Service Guide, Section 8, Compressor Disassembly for details.

COMPRESSOR SIZE	MOTOR TO DISCHARGE VOLUTE	VOLUTE TO VOLUTE	DISCHARGE FLANGE	COMPRESSOR FOOT
013-020	(2) No. 8 x 2.50"	(6) No. 8 x 2.0"	(2) No. 8 x 2.0"	(2) No. 8 x 2.0"
022-032	(2) No. 8 x 2.50"	(6) No. 8 x 2.0"	(2) No. 8 x 1.5"	(2) No. 8 x 2.0"
035-050	(2) No. 8 x 2.50"	(6) No. 8 x 2.0"	(2) No. 8 x 2.0"	(2) No. 8 x 2.0"
055-080	(2) No. 8 x 2.50"	(6) No. 8 x 2.0"	(2) No. 8 x 2.0"	(2) No. 8 x 2.0"
089-125	(2) No. 8 x 2.50"	(6) No. 8 x 2.0"	(2) No. 8 x 2.0"	(2) No. 8 x 2.0"

4. Install lifting plates that would bolt to the top 2 or 3 bolts. These plates should be installed on the first and third volute flanges (Refer to Figure 33).
5. Remove the suction elbow. Take note to see if the compressor moves at all. This can be monitored with dial indicators (indicators should be from the condensate shell or floor stand). If the compressor moves, corrective action will be necessary for reassembly (i.e. bolt holes will have to be enlarged).
6. Support the motor/compressor assembly with rigging. This is just to support the assembly and to prevent it from slipping as the compressor foot and discharge flange bolts are removed.
7. Remove motor/compressor assembly. This assembly should be placed on a skid in such a manner as to allow the compressor foot and discharge flange to be bolted down. The terminal end of the motor should be supported as well.
   NOTE: The assembly may shift to one side during lifting. This should not be more than several inches. If the shift is greater, the rigging must be readjusted.

REASSEMBLY

1. Rig the motor/compressor assembly into place. Replace the bolts into compressor foot and discharge flange connections. Before tightening these bolts, the locating dowel pins should be installed.
2. Torque the bolts down on the compressor foot and discharge flange. Then remove the rigging.
3. Install the suction elbow. Use the proper torquing sequence (as shown in Figure 34). Dial indicators should be used on the horizontal and vertical axis to monitor any compressor movement. (NOTE: Support indicators from the floor or condenser shell). This movement must be minimized where installing the suciton elbow. If applicable, tighten support bolts on the motor end of the compressor.
4. Reconnect all external components. This includes vane linkages, vent lines, etc.
   NOTE: New gaskets should be used for reassembly. All gasket surfaces should be clean and dry. At this point, the vibration of the unit should be checked. Refer to the vibration handout for this procedure.

INSTALLATION OF NEW MOTOR

1. Inspect shipping container for any shipping damage. Repair or report any damages as necessary.
2. Disassemble compressor and remove old motor.

3. Checking new motor
   a. Check shaft rotation for T.I.R. The motor may have to be rotated so the terminal board is in the proper position. The shaft can be turned by hand, although it may be easier to use a strap wrench to turn it.
   b. Check for end play. Using a dial indicator, there should not be any play. This is because the ball bearings are pre-loaded.
   c. Check for damage to the terminal board.
      NOTE: The studs should be tight and they should be numbered for proper electrical connections.
4. Install the motor. This should include the oil supply and drain lines, motor cooling supply and return lines, etc.
5. Check the oil flow. The oil flow is minimum of 0.6 gallons/minute for the babbitt bearing and a minimum of 0.2 gallons/minute for the ball bearing.
6. Complete the assembly of the compressor. Refer to the appropriate service literature for this procedure.
   NOTE: Vibration levels should be checked after any teardown. Refer to the vibration analysis handout for more information.

BEARING COMPARISON

Refer to Figures 35 and 36.

The CVHE motors have two bearing designs. The initial "A" design was a roller bearing on the compressor end and a double taper roller thrust bearing on the terminal end. The correct "B" and "C" designs incorporate a babbitt bearing on compressor end and a double (duplex) ball bearing on the thrust end. The comparative cross-sections are shown in Figures 35 and 36.

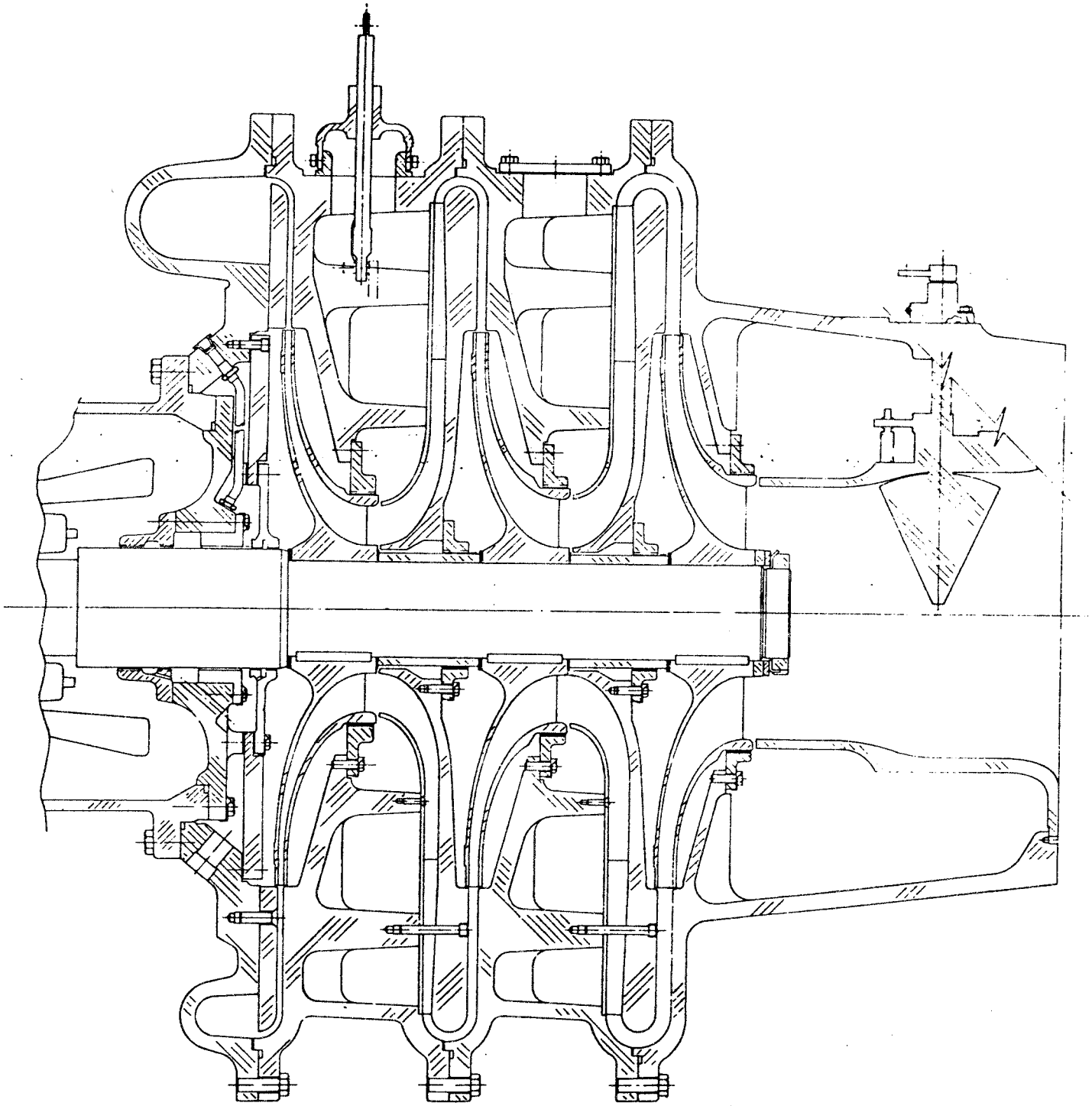

Figure 1

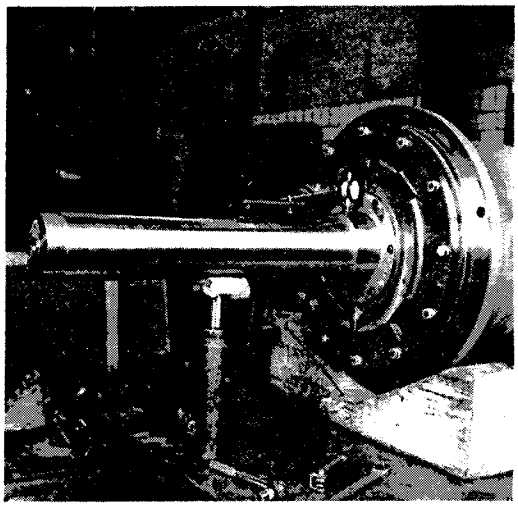

Figure 2

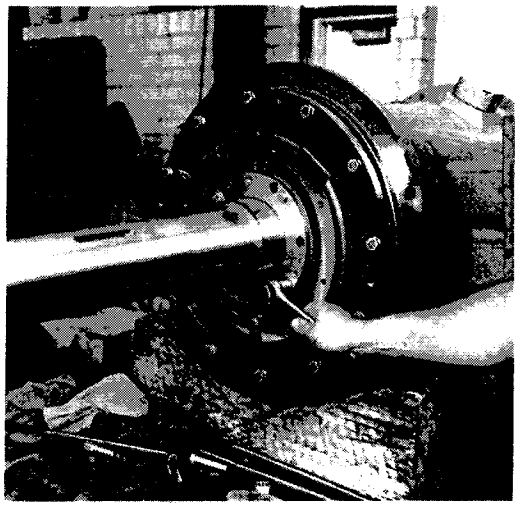

Figure 3

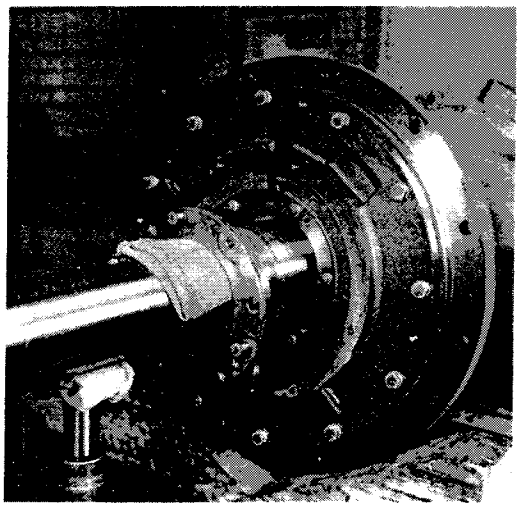

Figure 4

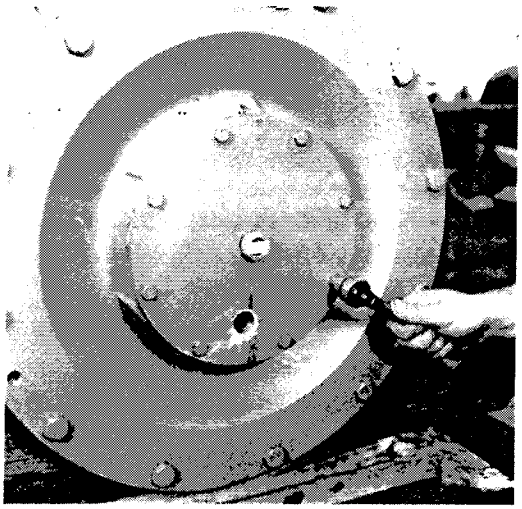

Figure 5

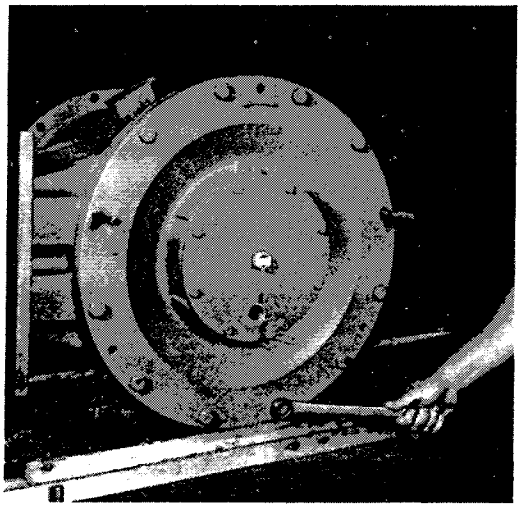

Figure 6

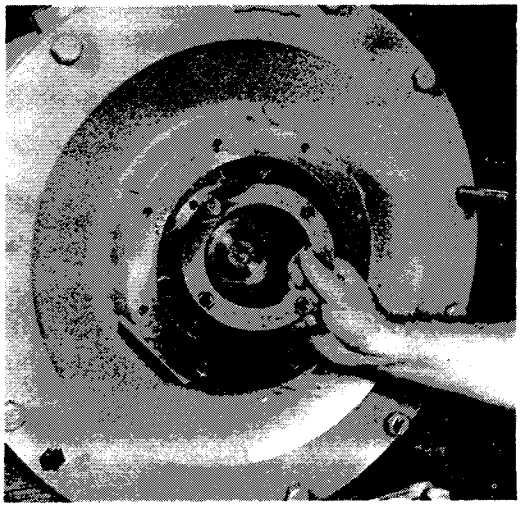

Figure 7

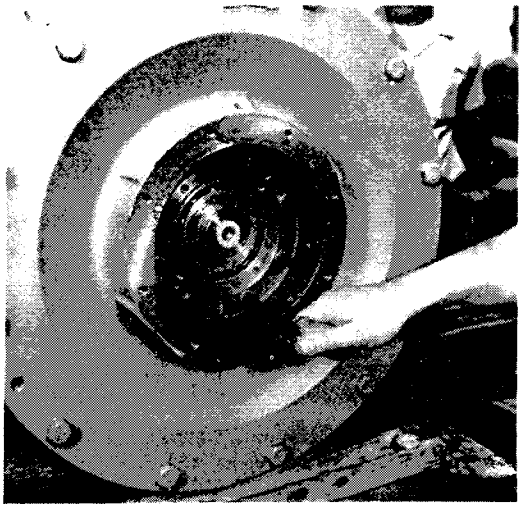

Figure 8

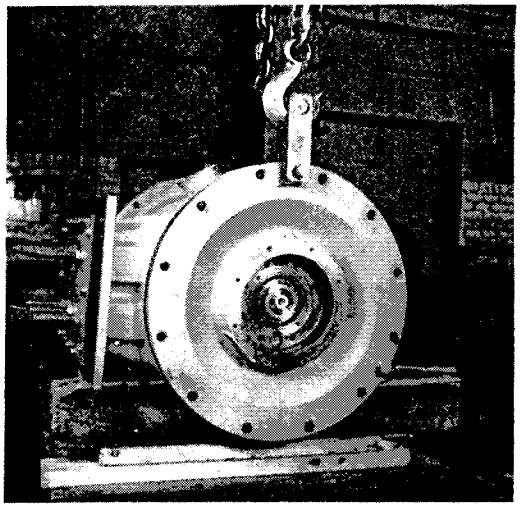

Figure 9

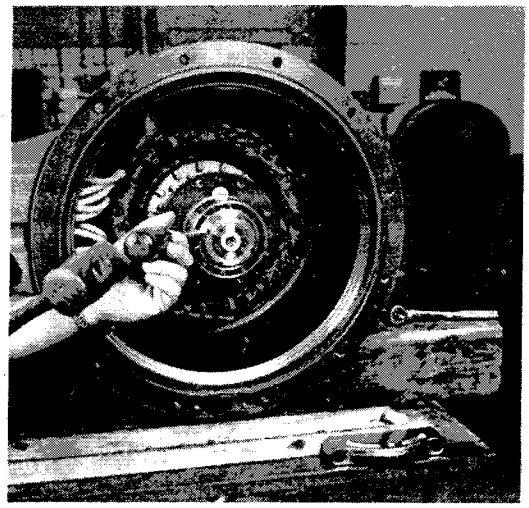

Figure 10

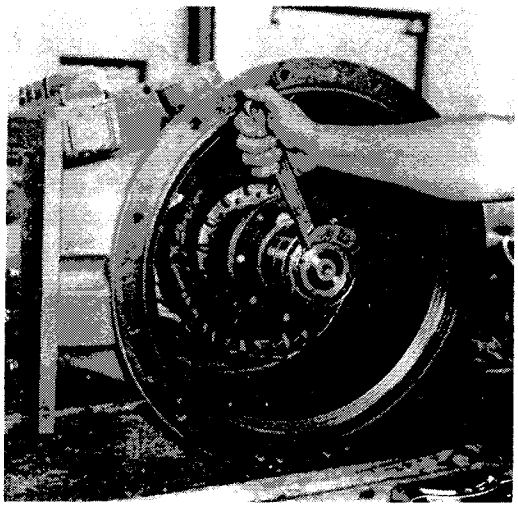

Figure 11

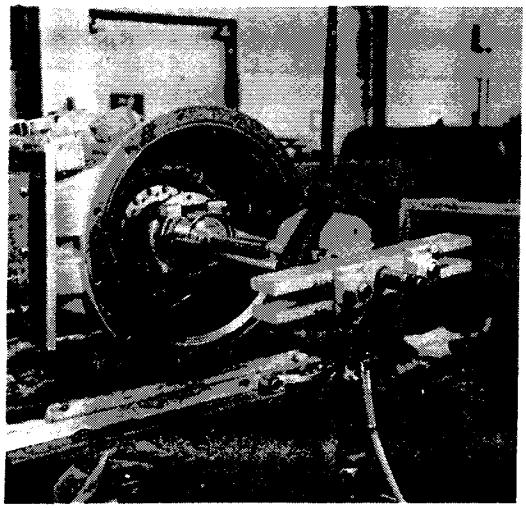

Figure 12

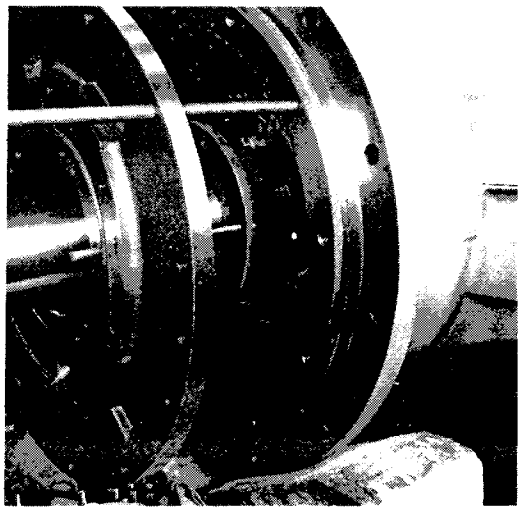

Figure 13

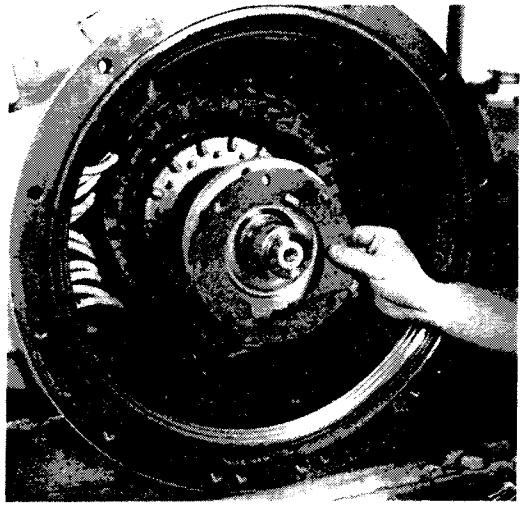

Figure 14

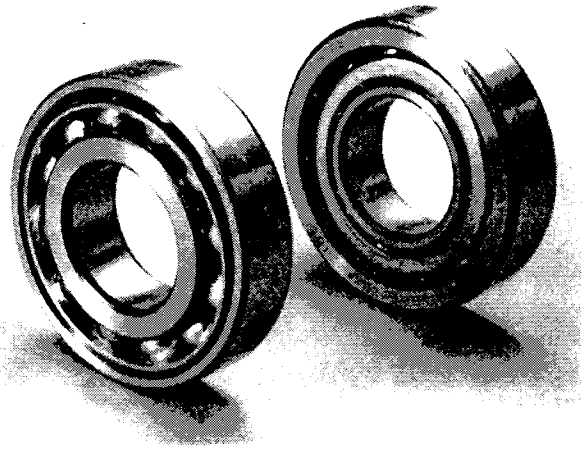

Figure 15

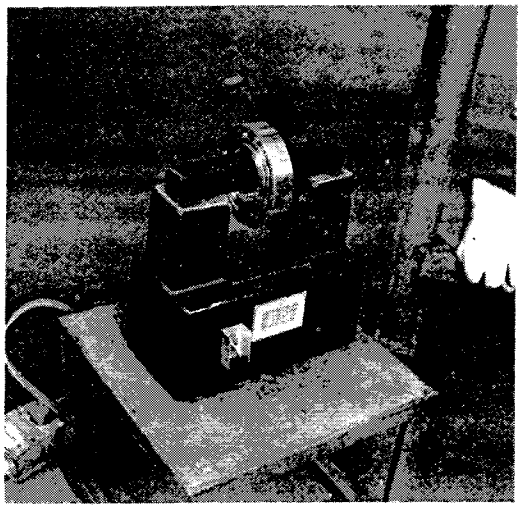

Figure 16

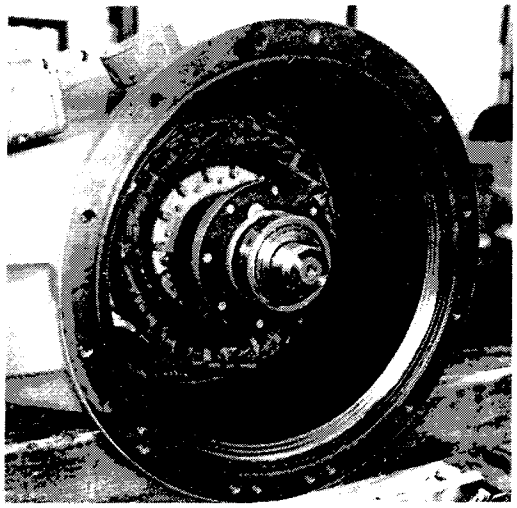

Figure 17

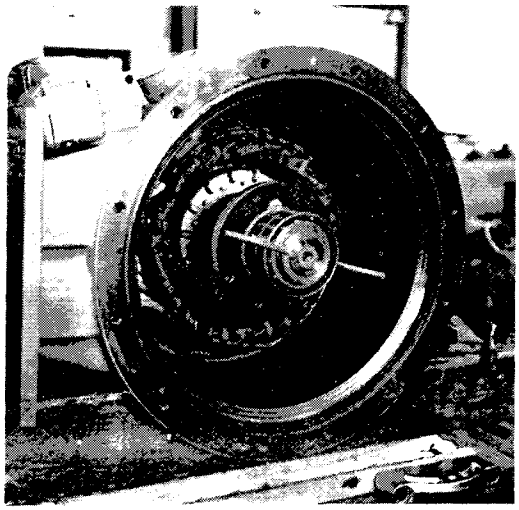

Figure 18

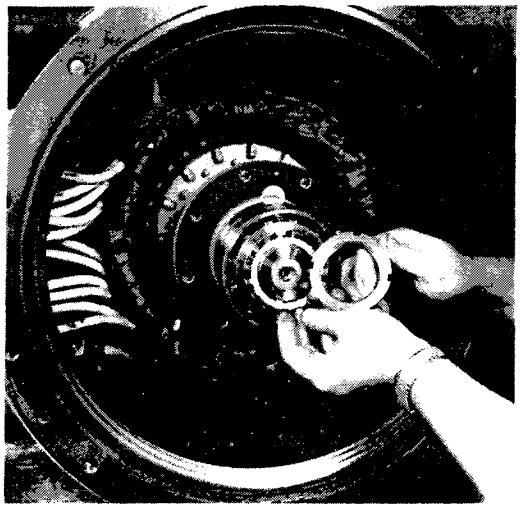

Figure 19

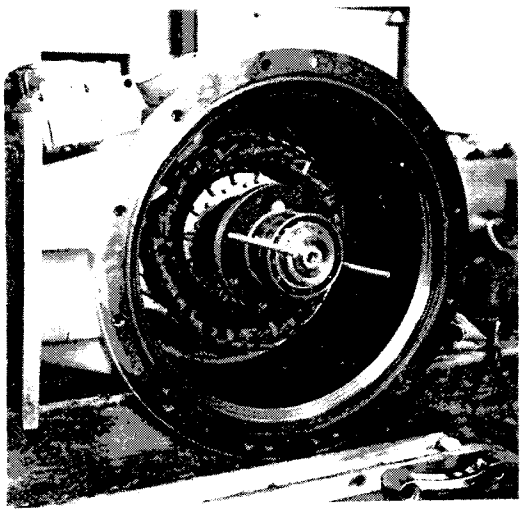

Figure 20

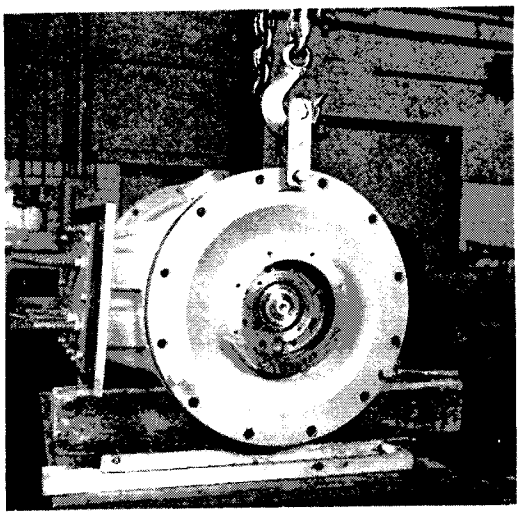

Figure 21



Figure 22

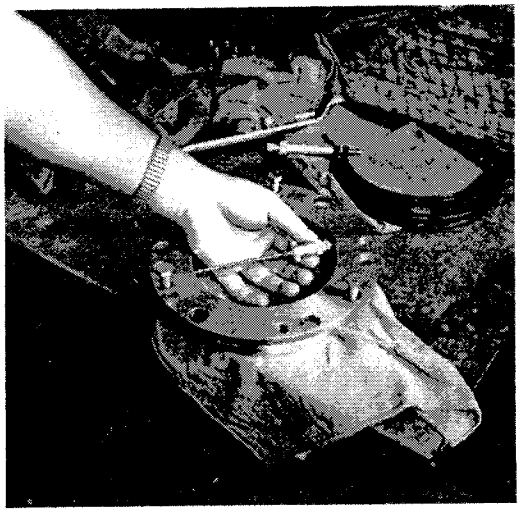

Figure 23

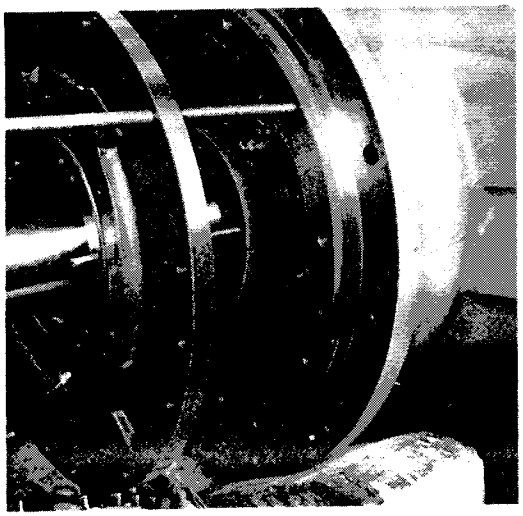

Figure 24

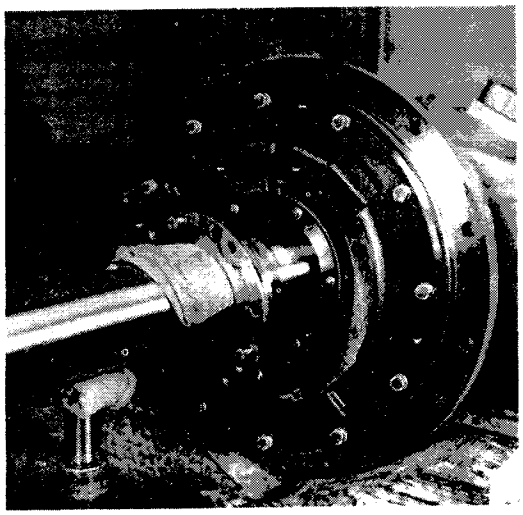

Figure 25

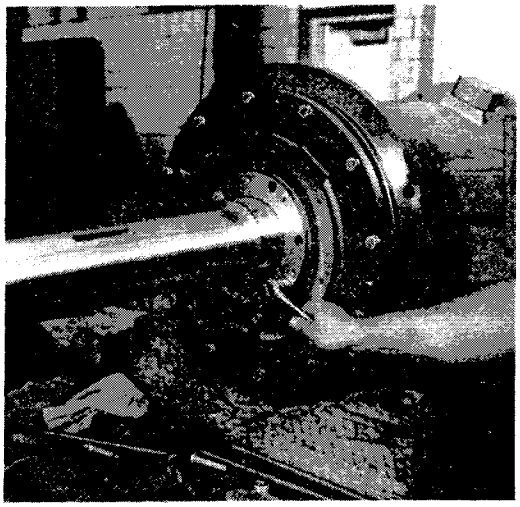

Figure 26

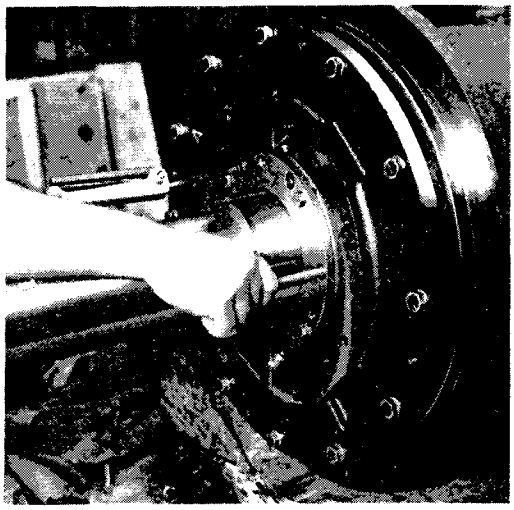

Figure 27

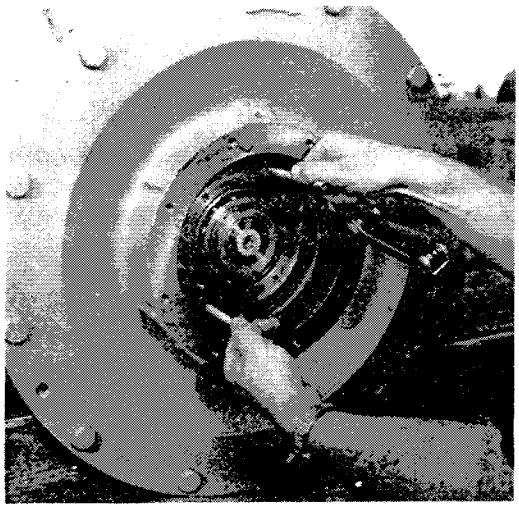

Figure 28

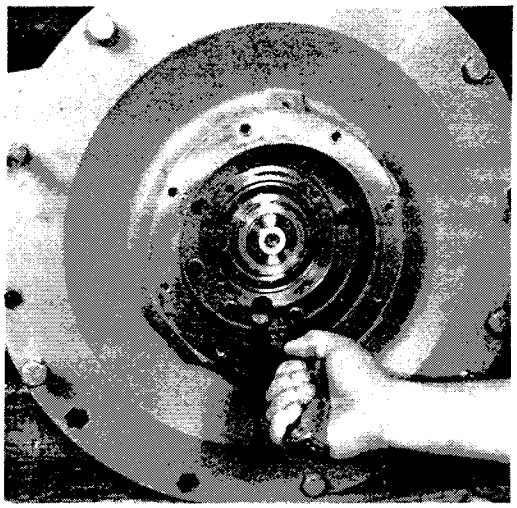

Figure 29

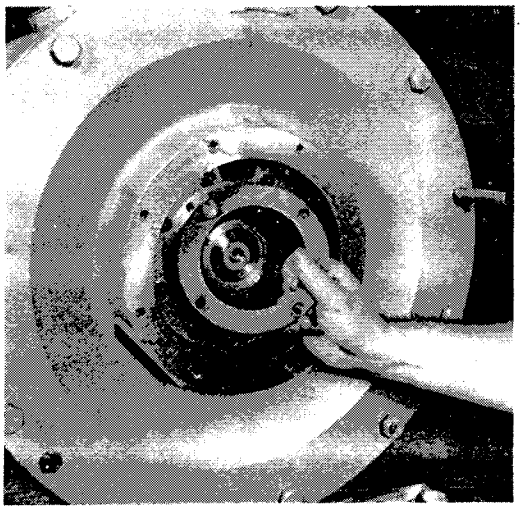

Figure 30

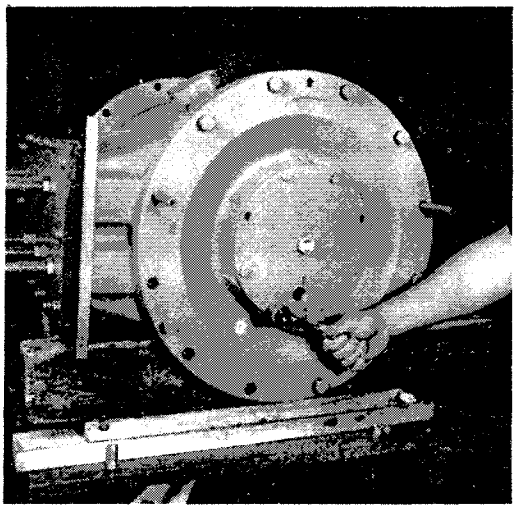

Figure 31

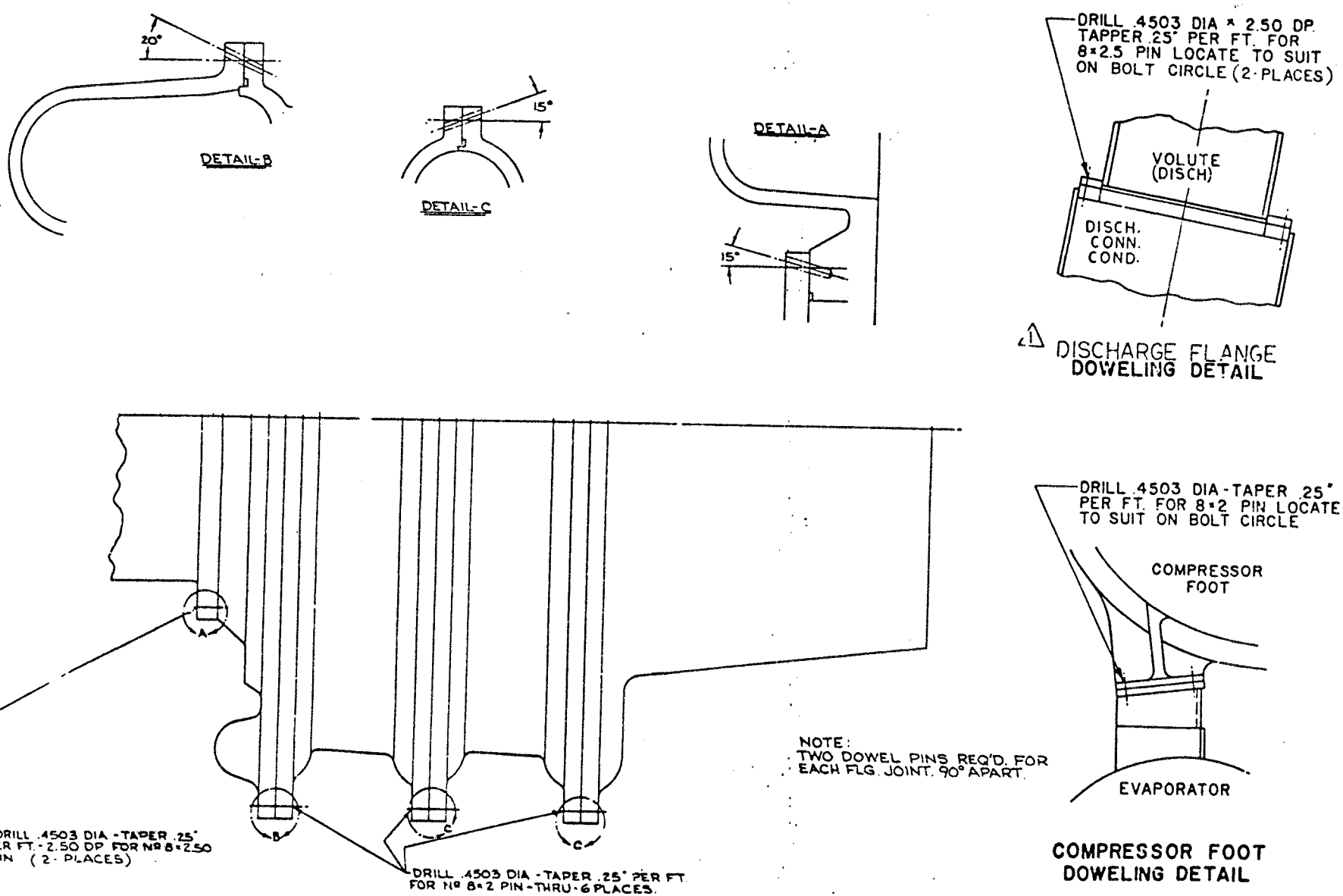

Figure 32 - COMPRESSOR DOWELING

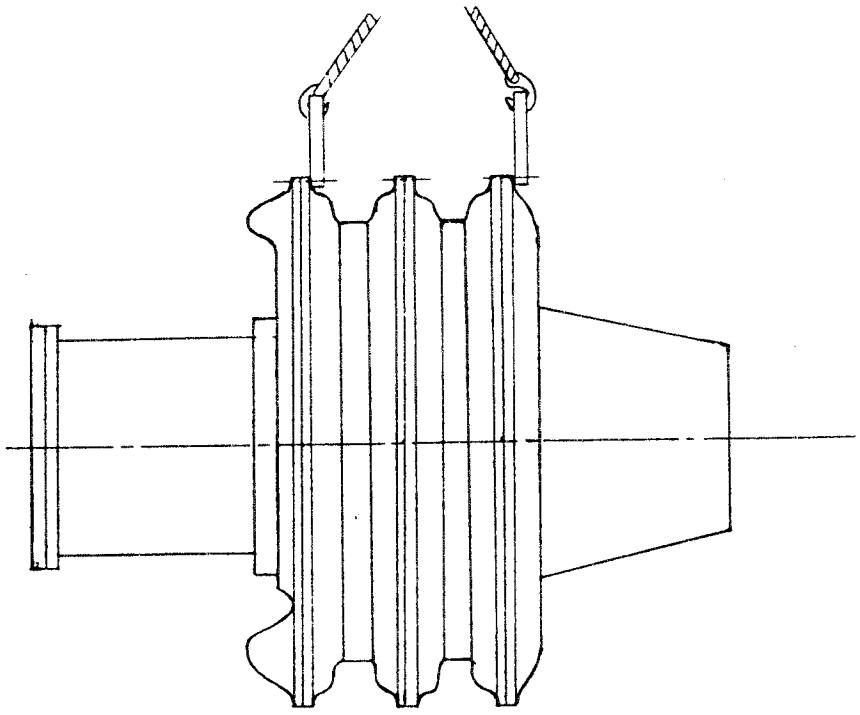

Figure 33 - LIFTING MOTOR-COMPRESSOR ASSEMBLY

Assemble the elbow to the unit with "O" rings in place. Use the bolting sequence as shown below.

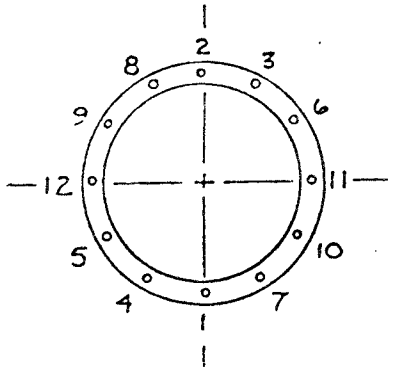

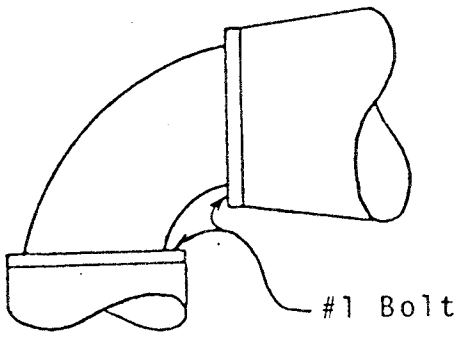

TIGHTENING SEQUENCE

A. Start tightening sequence on bolts #1 and #2 on suction connection. Tighten bolts #1 and #2 on the compressor.

B. Proceed with sequence on suction connection, then on the compressor.

Figure 34 - SUCTION ELBOW TIGHTENING SEQUENCE

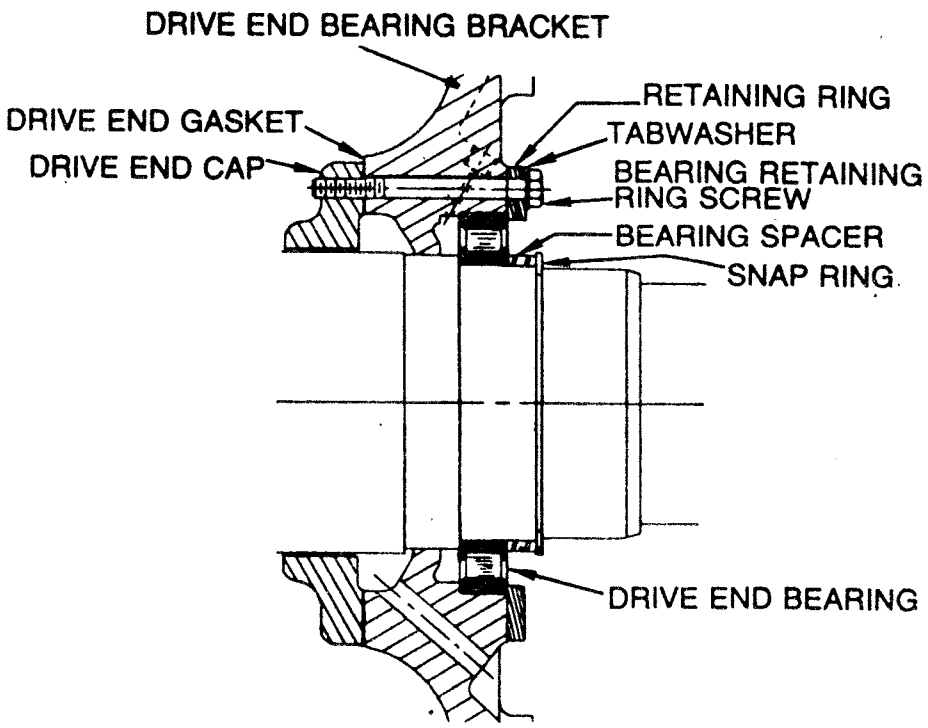

"A" Design Sequence

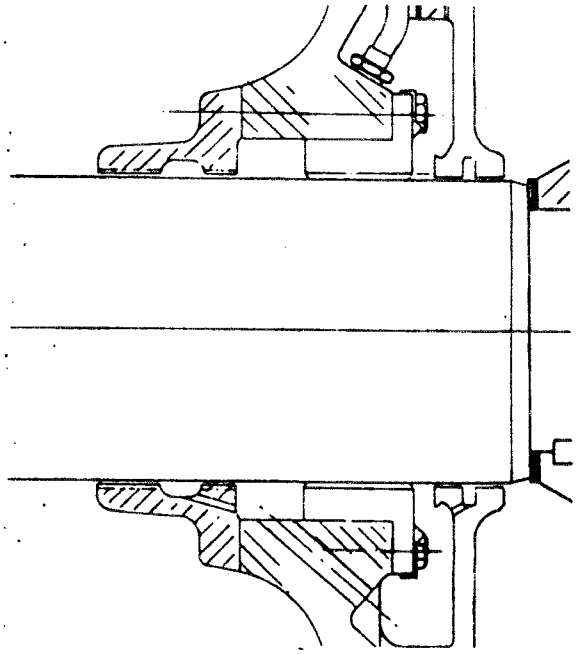

"B" Design Sequence

Figure 35 - DRIVE END BEARING ASSEMBLY

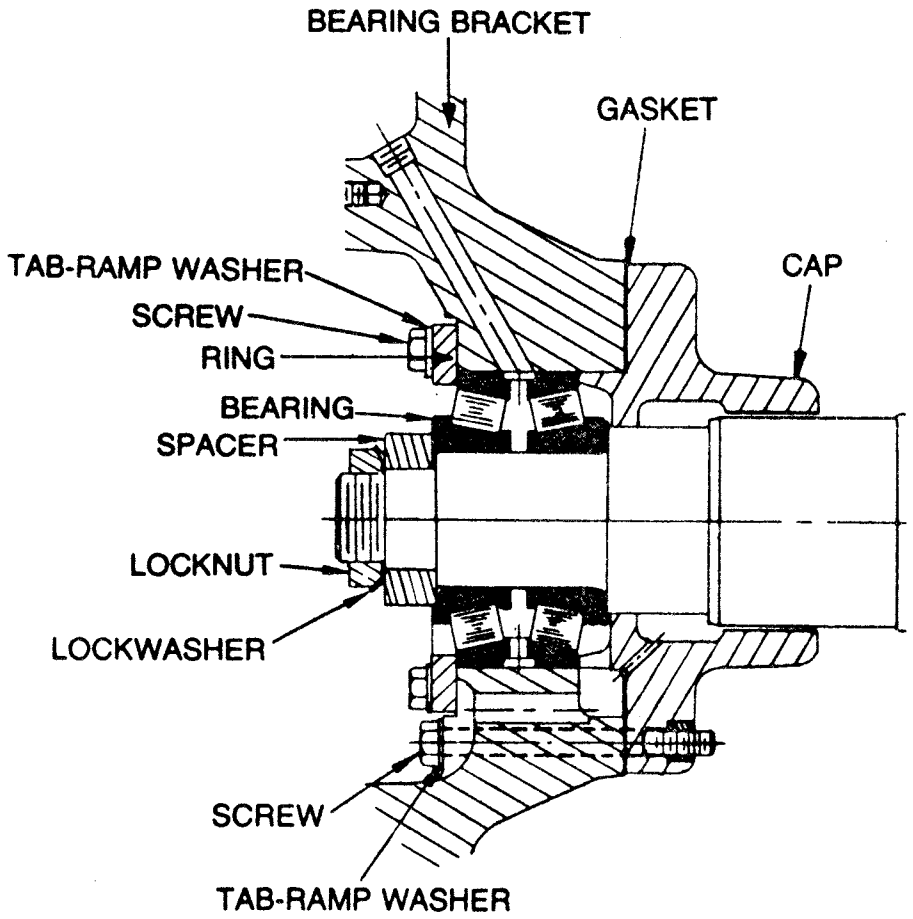

"A" Design Sequence

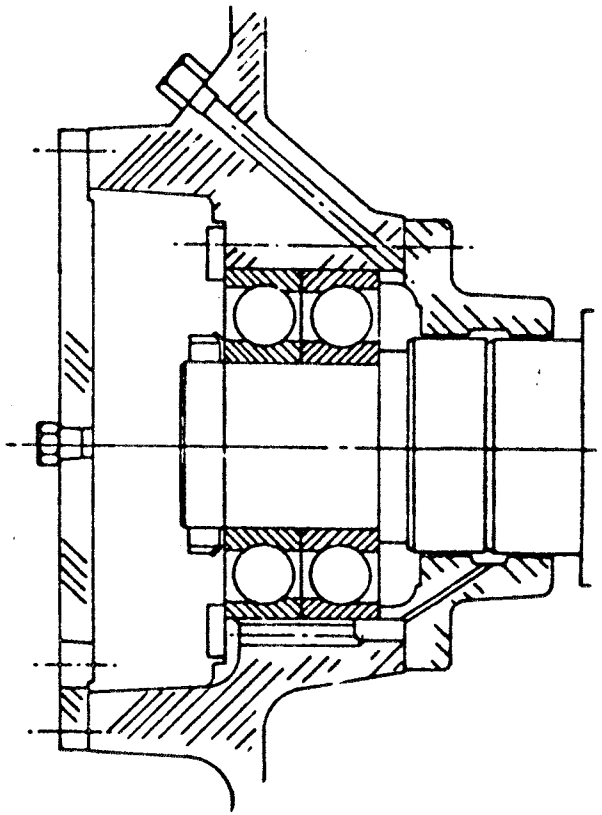

"B" Design Sequence

Figure 36 - OPPOSITE DRIVE END THRUST BEARING ASSEMBLY CROSS-SECTION

_____ION CENTRAVAC COMPRESSOR INFORMATION

LT_____ LAST RUN_____ DATA BY_____ DATE_____

SEAL CLEARANCES	DISASSEMBLY	ASSEMBLY
1ST STAGE IMPELLER EYE		
1ST STAGE IMPELLER REAR		
2ND STAGE IMPELLER EYE		
2ND STAGE IMPELLER REAR		
3RD STAGE IMPELLER EYE		
INT. SEAL/3RD ST IMP REAR		

FIRST STAGE IMPELLER		
DRAWING NO.		
PATTERN NO.		
OUTSIDE DIAMETER		
BLADE DIAMETER		
WIDTH		
SECOND STAGE IMPELLER		
DRAWING NO.		
PATTERN NO.		
OUTSIDE DIAMETER		
BLADE DIAMETER		
WIDTH		
THIRD STAGE IMPELLER		
DRAWING NO.		
PATTERN NO.		
OUTSIDE DIAMETER		
BLADE DIAMETER		
WIDTH		
DIFFUSER WIDTHS		
FIRST		
SECOND		
THIRD		
MOTOR/COMP. SHAFT DATA		
SHAFT END FLOAT	____/____	____/____
SHAFT RUN OUT	____/____	____/____
TORQUE TO TURN SHAFT	____/____	____/____

TRANE

Engineering Bulletin

Library	**Product Literature**
Product Section	**Refrigeration**
Product	**CenTraVac Chiller**
Model	**000**
Literature Type	**Engineering Bulletin**
Sequence	**83**
Date	**March 1997**
File No.	**PL-RF-CTV-000-EB-83-397**
Supersedes	**CTV-EB-83 July 1993**
Ordering No.	**CTV-EB-83**

CVHE / CVHF / CVHG / CDHF DISASSEMBLY FOR LIMITED ACCESS INSTALLATION REQUIREMENTS

This engineering bulletin presents the latest information regarding partial disassembly of CenTraVac® chillers for limited access installation requirements. This bulletin outlines the various disassembly options available.

1. **Compressor Removal (Compressor Doweling)**
   To remove the compressor for limited access installation requires ordering "compressor doweling"* which is listed in the CenTraVac Lynx pricing. This feature is standard on CDHF models. Removing the compressor assembly may expose it to unusual forces which could result in misalignment of the compressor castings. To eliminate the potential for misalignment, dowel pins must be factory installed in the compressor casting and mounting flanges.

   — Consult Service Company for field supervision estimate.

   — The Green Sheet shipping cycle for the chiller is not affected.

   *The compressor doweling package includes a set of gaskets and O-rings to be used during reassembly.

©American Standard 1997

2. **Economizer/Purge Removal**
The purge can be easily removed.

The economizer can be removed by unbolting the connecting flanges. For reassembly, use new gaskets and bolt the connecting flanges.

— Consult CVHE-IN-3A (Chiller Jobsite Disassembly/Reassembly Instructions)

— Consult Service Company for field supervision estimate.

3. **Separable Shells**
The CVHE / CVHF / CVHG / CDHF chiller can be designed and constructed with flanges to allow separation of the condenser and the evaporator shells. The compressor must be removed prior to the separation of the shells. Consequently, the separable shell option must include compressor doweling.

— Order "separable shells and compressor doweling" from Lynx pricing. Standard feature on CDHF models

— Allow for extended shipping cycle.

— Consult Service Company for field supervision estimate.

4. **Disassembled Shipment**
Trane will **not** ship a disassembled unit. Any disassembly must be done at the job site.

5. **Special Rigging**
Rigging the CVHE / CVHF / CVHG / CDHF in a nonhorizontal configuration is not recommended because of possible damage.

Table 1 — Description of Dimensions

Dimension	Description
A	Width of chiller without economizer.
B	Horizontal distance the control panel extends beyond the evaporator tube sheet.
C	Height from the chiller base to the top of the oil tank.
D	Width of the compressor including the inlet guide vane linkage and discharge volute flange.
E	Overall length of the compressor/motor.
F	Height of the compressor.
G	Height from the chiller base to the discharge connection on the condenser.
H	Height from the chiller base to the top of the purge.
J	Height from the chiller base to the bottom of the control panel (not including the gauge bracket).
K	Height from the chiller base to the top edge of the suction connection flange.
L	Width from front of control panel to left edge of connection flange.
M	Width of condenser (this width incorporates the connection flange, etc.)
N	Height from the chiller base to the top of the rear motor support.
P	Height from the chiller base to the top of the control panel.
R	Length from tube sheet of "S,M" length heat exchanger to end of motor removal space.
S	Length from tube sheet of "L" length heat exchanger to end of motor removal space.
T	Diameter of motor end flange.
U	Overall width of chiller.
V	Overall height of chiller.
W	Height from the chiller base to the top of free cooling connection. CVHE / CVHF / CVHG models only.

FIGURE 1 — CHILLER DIMENSIONS (INCHES) AND WEIGHTS (LBS)

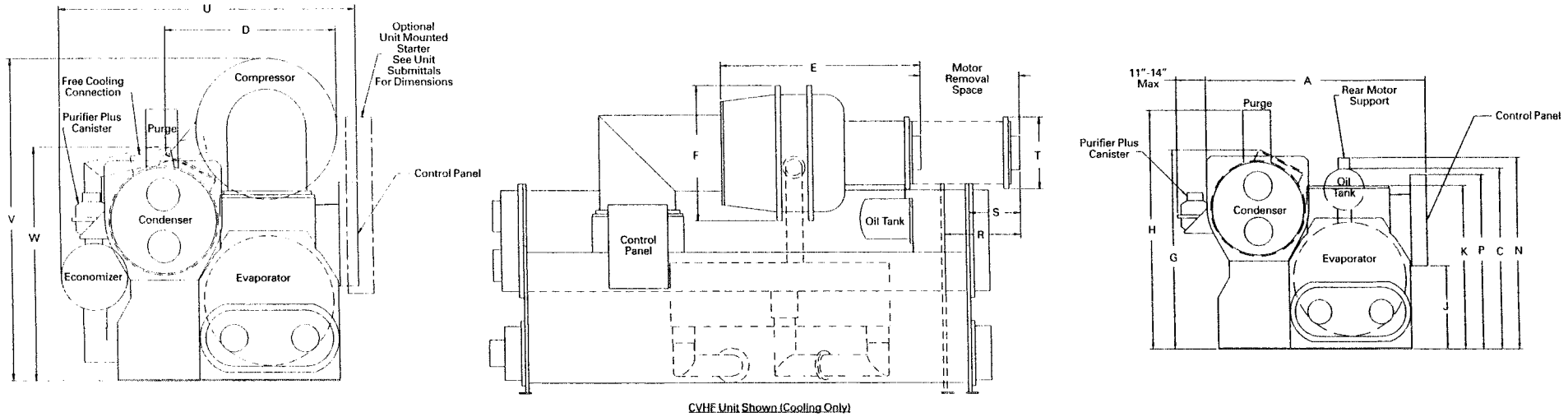

CVHF Unit Shown (Cooling Only)

Table 1

	COMP SIZE	SHELL SIZE	A	C	D	E	F	G	H	J	K	N	P	R	S	T	U	V	W	ECON WEIGHT COMP WEIGHT	ECON WEIGHT W/O FREE COOLING	ECON WEIGHT W/FREE COOLING
CVHE	230-320	032	56.8	50.4	52.2	82.5	48.9	40.5	58.5	38.5	47.1	54.0	73.5	29.7	17.0	23.5	69.2	87.7	41.1	6880	300	460
	230-320	050	63.7	56.3	52.2	82.5	48.9	48.3	66.1	38.5	48.0	60.0	73.5	29.7	17.0	23.5	79.7	94.7	59.9	6880	520	820
	360-500	050	63.7	56.3	58.5	79.4	51.3	48.3	66.1	38.5	48.0	60.0	73.5	29.8	17.3	24.5	79.7	95.0	59.9	7300	520	820
	360-500	080	82.8	70.7	58.5	79.4	51.3	71.1	92.2	38.5	62.1	75.0	73.5	29.8	17.3	24.5	94.6	114.3	83.6	7300	840	1160
	560-800	080	82.8	70.7	62.8	91.4	52.7	71.1	92.2	38.5	62.1	75.0	73.5	33.5	21.1	28.5	95.2	114.0	83.6	9175	840	1160
CVHF	555-640	050	72.1	57.1	57.3	82.5	52.7	49.1	66.1	38.5	48.8	60.0	73.5	32.4	19.9	28.5	79.7	99.8	59.9	8800	420	720
	555-640	080	82.8	71.9	62.8	82.5	52.7	74.6	92.2	38.5	62.1	75.0	73.5	33.6	21.2	28.5	95.2	116.0	82.5	8800	500	820
	650-910	080	82.8	70.7	66.6	78.5	54.3	76.7	92.2	38.5	63.7	75.0	73.5	30.5	17.8	28.5	95.2	114.7	82.5	9200	500	820
	650-910	142	102.3	75.9	66.6	78.5	54.3	82.9	103.8	38.5	59.8	79.3	73.5	30.5	17.8	28.5	119.7	121.1	84.5	9200	980	1450
	1060-1280	142	102.3	75.9	68.0	77.5	54.3	83.9	103.8	38.5	69.8	79.3	73.5	30.5	17.8	30.0	119.7	121.1	84.5	9800	980	1450
	1060-1280	210	113.5	87.6	68.0	77.5	54.3	96.0	109.2	44.2	81.5	92.9	79.2	33.5	21.1	30.0	130.8	133.0	92.5	9800	980	1450
	1060-1280	250	126.3	87.1	68.0	81.2	54.3	100.1	114.1	47.0	86.2	97.8	82.0	—	18.6	32.4	143.5	136.9	—	9800	980	—
CVHG	670-780	080	82.8	70.0	66.6	95.0	54.3	76.5	92.2	38.5	63.7	75.0	73.5	33.5	21.1	32.4	95.2	114.7	82.5	10360	840	1160
	670-780	142	102.3	76.4	66.6	95.0	54.3	82.9	103.8	38.5	69.8	79.3	73.5	27.8	17.8	32.4	119.7	121.1	84.5	10360	1180	1650
	920-1067	142	102.3	76.4	68.6	93.5	54.3	83.9	103.8	38.5	69.8	79.3	73.5	27.8	17.8	32.4	119.7	121.1	84.5	11160	1180	1650
	920-1067	210	113.5	87.1	69.4	93.5	54.3	96.0	109.2	44.2	81.5	92.9	79.2	33.5	21.1	32.4	130.8	133.0	92.5	11180	1180	1650
CDHF	1060-1280 (2)	250 DUPLEX	126.3	87.1	68.0	81.2	54.3	100.1	114.1	47.0	86.2	97.8	82.0	—	37.0	32.4	143.5	136.9	—	9800 (2)	980 (2)	—
CDHG	1067 (2)	250 DUPLEX	126.3	87.1	68.0	94.0	54.3	100.1	114.1	47.0	80.7	97.8	82.0	—	37.0	32.4	143.5	136.9	—	11160 (2)	980 (2)	—

NOTE: COMPRESSOR WEIGHT DOES NOT INCLUDE THE WEIGHT OF SUCTION ELBOW.
*IF MOTOR IS 6000/6600 VOLT, CONTACT LBU MARKETING.

NOTES:

1. All weights +/- 5%.
2. All dimensions +/- 0.5 inch.
3. This is the maximum compressor weight (with largest motor), and without the suction elbow.
4. See Table 1 for a description of each lettered dimension.

Figure 2 — Separate Shell Dimensions (inches) And Weights (lbs)

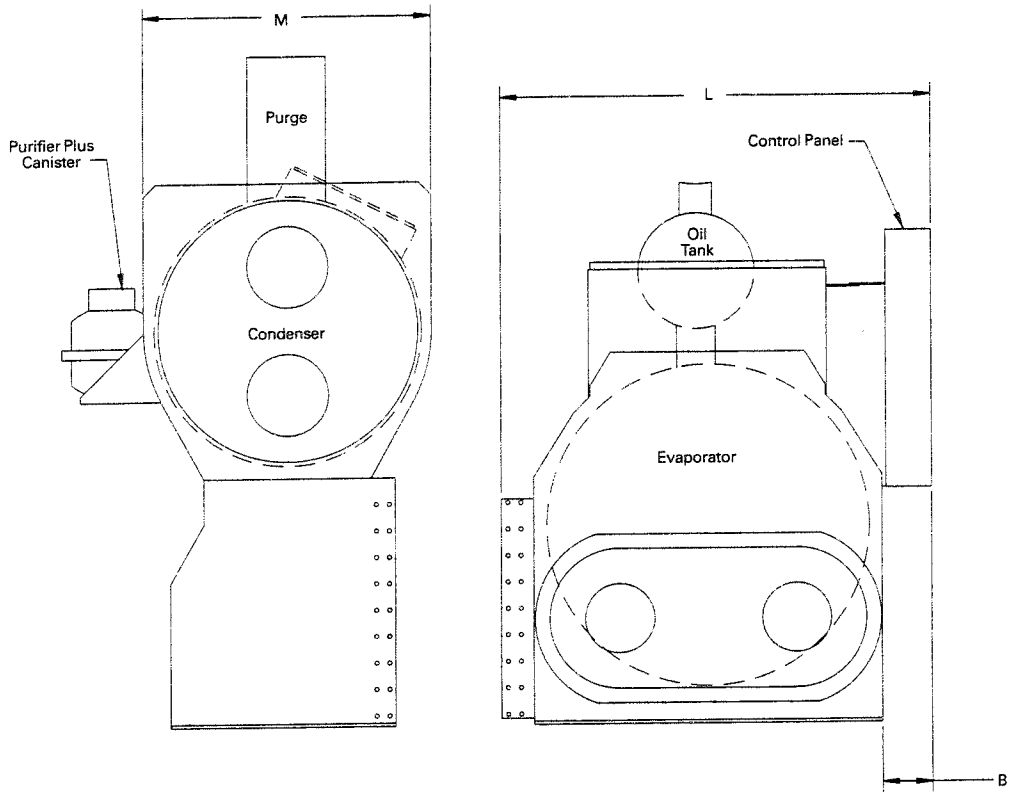

Table 2

	COMP SIZE	SHELL SIZE	B	L	M	MAXIMUM EVAP WEIGHT	MAXIMUM COND WEIGHT	MAXIMUM EVAP WATERBOX WEIGHTS		MAXIMUM COND WATERBOX WEIGHTS	
								MARINE	NONMARINE	MARINE	NONMARINE
CVHE	230-320	032	3.6	38.6	23.5	3600	3200	585	410	720	490
	230-320	050	1.6	43.1	27.8	5400	4400	1140	760	1310	870
	360-500	050	1.6	43.1	27.8	5400	4400	1140	760	1310	870
	360-500	080	7.1	61.7	35.0	8900	6700	2290	1780	2550	1610
	560-800	080	7.1	61.7	35.0	8900	6700	2290	1780	2550	1610
CVHF	555-640	050	1.6	43.1	27.8	5400	4400	1140	760	1310	870
	555-640	080	7.1	61.7	35.0	8900	6700	2290	1780	2550	1610
	650-910	080	7.1	61.7	35.0	8900	6700	2290	1780	2550	1610
	650-910	142	7.8	69.6	46.0	12800	11000	3220	2140	5250	3570
	1060-1280	142	7.8	69.6	46.0	12800	11000	3220	2140	5250	3570
	1060-1280	210	6.6	75.1	50.5	14600	14000	4666	3200	6440	4100
	1060-1280	250	5.9	82.1	56.8	19800	17200	7790	5460	8570	6520
CVHG	670-780	080	7.1	61.7	35.0	8900	6700	2290	1780	2550	1610
	670-780	142	7.8	69.6	46.0	12800	11000	3220	2140	5250	3570
	920-1067	142	7.8	69.6	46.0	12800	11000	3220	2140	5250	3570
	920-1067	210	6.6	75.1	50.5	14600	14000	4666	3200	6440	4100
CDHF	1060-1280 (2)	250 DUPLEX	5.9	82.1	56.8	24900	24000	10120	—	11120	—
CDHG	1067 (2)	250 DUPLEX	5.9	82.1	56.8	24900	24000	10120	—	11120	—

NOTE: EVAPORATOR AND CONDENSER WEIGHTS DO NOT INCLUDE THE WEIGHTS OF WATERBOXES
WATERBOX WEIGHTS ARE FOR 2 PASS 300 PSI WATERBOXES (EXCEPT FOR CDHF & CDHG 1 PASS EVAP AND COND)

Notes:
1. All weights +/-5%.
2. All dimensions +/-0.5 inch.
3. See Table 1 for a description of each lettered dimension.
4. All weights are without water boxes.

R-11, R-113 and R-123 CenTraVac O-Ring Sealant Instructions

The Trane Company recommends using Loctite 515 Gasket Eliminator on all refrigerant to atmospheric O-ring connections (except CVHE suction elbows) on centrifugal chillers using R-11, R-113 and R-123. Loctite 515 Gasket Eliminator is available from Trane Company in 50 ml tubes (SEL0416) and 300 ml caulking tubes (SEL0376). To ensure leak free joints after rebuild, apply Loctite 515 to grooved O-ring joints as follows:

1. Inspect O-ring groove for nicks and scratches. Minor surface scratches or nicks can be repaired by filling the imperfection with a soft soldering material, then filing or sanding to a smooth finish.
2. Apply a bead of Loctite 515 (1/8" dia. max.) to the entire circumference of the bottom I.D. of the O-ring groove as shown in Figure 1.
3. Place the O-ring into the groove and gently press it into sealant. (Note: O-rings should not be stretched more than 5% of their ID dimension once seated in the groove.)
4. Apply a bead of Loctite 515 (1/8" dia. max.) to the entire circumference between the O-ring and top O.D. of the groove as shown in Figure 2.

For more specific information concerning the use of Loctite 515, refer to Service Bulletin CTV-SB-66 (latest version).

Figure 1

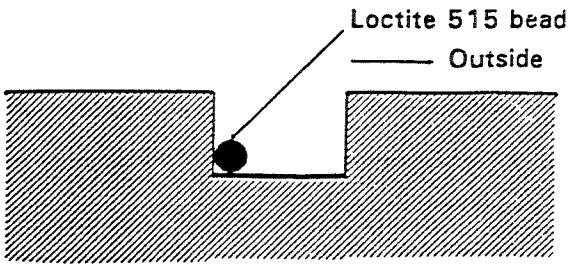

Figure 2

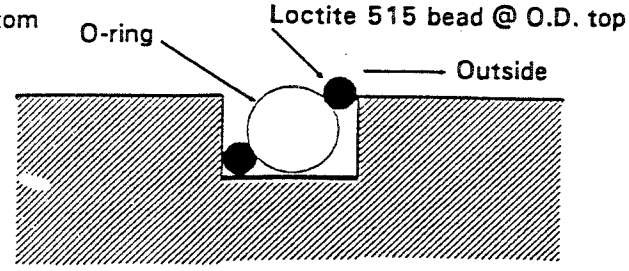

Form 1-15.125 (792)
Supersedes 1-27.16-1(290)

©American Standard Inc. 1992

2764-0001-14-00

TRANE

Installation CTV-IN-1

Library	Service Literature
Product Section	Commercial Aftermarket Products
Product	CenTraVac
Model	CTV
Literature Type	Installation
Sequence	1
Date	February 1996
File No.	SV-CAP-CTV-CTV-IN-296
Supersedes	New

Trane CenTraVac®
Low Pressure HCFC123
Engineered Conversion℠
Chiller Retrofit

506750590100

Since the Trane Company has a policy of continuous product improvement, it reserves the right to change specifications and design without notice. The installation and servicing of the equipment referred to in this booklet should be done by qualified, experienced technicians.

© American Standard Inc. 1996

Table of Contents

WARNING

This manual, including the warnings and cautions inside, must be carefully read and followed by all persons who use or maintain this product, including those who have any responsibility involving its selection, application, service or repair. This equipment will perform as designed only if used and maintained according to the instructions. Otherwise, it could fail to perform as designed and persons who rely on this product could sustain serious personal injury or death.

Page	Description
2	**Table of Contents**
3	**Model Number**
4	**General Information**
	About this Manual
	Literary Change History
	Warnings & Cautions
	Nameplates
	Contents of Retrofit Package
6	CenTraVac® Conversion Package Explanation
7	**Retrofit Responsibility**
8	**Prior to Retrofit**
	Log Pre-Retrofit Operating Data
	CVHE Doweling Procedure
	Evacuate Refrigerant
	Scribing
10	**Performing the Retrofit**
	Disassembly
	Compressor
	Motor Replacement
	Oil
	Oil Drain Hoses
	Air Run
	Compressor Reassembly
	Vibration Monitoring
	Threaded Pipe Joints
	Valves
	Orifice Replacement
	Additional Unit Modifications and Enhancements
17	**Completing the Retrofit**
18	**After the Retrofit**
19	**Checklist and Test Log**
26	**CenTraVac® Engineered Conversion Retrofit Log**
	Appendices
27	**A** - Piping Modifications - PCV
28	**B** - Piping Modifications - CV
35	**C** - Refrigerant Filter Screen Installation
36	**D** - Ejector System Installation
39	**E** - Oil Filter Modification
42	**F** - Oil Flow Measurement
43	**G** - Loctite Gasket Eliminator
45	**H** - Trim Balancing CVHE
46	**I** - CVHE Oil Sump Vent Line Piping Modifications
47	**J** - CV, CVHB Oil Sump Vent Line Piping Modifications
48	**K** - Refrigerant Charges

List of Figures

Page	Description
8	**1** - Dowel Pin
9	**2** - Discharge Flange
	3 - Compressor Foot Doweling
29	**4** - Hermetic Type RVX Squirrel Cage
30	**5** - Loose Parts / Location Information CV6A, 6C, 6H, 6J and 7G
31	**6** - Loose Parts / Location Information CV8C
32	**7** - Loose Parts / Location Information CV9A
33	**8** - Loose Parts / Location Information CV9F & 10F
34	**9** - Loose Parts /Location Information CV10H & 12F
35	**10** - Tube Assembly
37	**11** - Typical Oil Recovery System
	12 - Schematic of Lubrication System (RCS Style Motors)
40	**13** - Recommended Modifications
	14 - Oil Filter Top Assembly Modification
44	**15** - Bolt Connection Modified for Back-Off Hole
46	**16** - CVHE Vent Line and Vent-Line Solenoid Valve Location
47	**17** - Oil Sump Vent Line
50	**9** - Evaporator Cross Reference
	10 - Model CV
	11 - Turbine Drive CenTraVac
	12 - Open Drive CenTraVac
51	**13** - Model OCV
	14 - Model PCV
	15 - Model CVHA, CVHB
52	**16** - Model CVHA,CVHB Component Availability
	17 - Heat Recovery Units
	18 - Model CVHB Using PDS Component Designators
53	**19** - Model CVHE, CVHE Using PDS Component Designators

List of Tables

Page	Description
7	**1** - Contractor's List
13	**2** - Flange Bolt Torque Recommendations for O-Ring & Flat Gasket Piping Connections
35	**3** - Orifice and Screen Parts
38	**4** - Oil Ejector System Parts
42	**5** - Oil Flow Limits for Louis Allis Motors
43	**6** - Tap Sizes
49	**7** - Model CTV
	8 - Model CTV (Standard Units)

Model Number

Unit Model Number

For service and replacement purposes, the Trane Engineered Conversion Retrofit is assigned a multiple-character alphanumeric model number that precisely identifies each unit. The model number keys are shown here.

Use of the model number will enable the owner/operator, installing contractor, and service technician to define the characteristics of any CenTraVac® unit. Be sure to refer to the model number when ordering replacement parts or requesting service.

Sample Model Number

Model No.	R	1	2	3		C	V	H	E	0	2	0	R
Digit No.	1	2	3	4	5	6	7	8	9	10	11	12	13

Digits 1, 2, 3, 4
Refrigerant Type

Digit 5
Not Used

Digits 6, 7, 8, 9
Unit Type

Digits 10, 11, 12
Tonnage

Digit 13
R = Retrofit
P = Performance Only

Sample Model Number

Model No.	R	1	2	3		C	V	1	0	0	0	0	R
Digit No.	1	2	3	4	5	6	7	8	9	10	11	12	13

Digits 1, 2, 3, 4
Refrigerant Type

Digit 5
Not Used

Digits 6, 7, 8, 9
Unit Type

Digits 10, 11, 12
Tonnage

Digit 13
R = Retrofit
P = Performance Only

Sample Model Number

Model No.	R	1	2	3		P	C	V	4	0	0	0	R
Digit No.	1	2	3	4	5	6	7	8	9	10	11	12	13

Digits 1, 2, 3, 4
Refrigerant Type

Digit 5
Not Used

Digits 6, 7, 8, 9
Unit Type

Digits 10, 11, 12
Tonnage

Digit 13
R = Retrofit
P = Performance Only

General Information

About This Manual

The instructions outlined in this booklet describe the recommended procedures to follow when performing an HCFC 123 Engineered Conversion℠ on a Trane CenTraVac®.

There will be certain recommendations made in this installation manual that refer to specific Trane parts that may need to be replaced or added to the unit during retrofit. It will be the Installer's responsibility to provide these parts when required. Many of these parts can be ordered as service parts from the Trane Company.

Environmental Accountability Policy

The Trane Company urges that all HVAC servicers working on Trane equipment, or any manufacturer's products, make every effort to eliminate, if possible, or vigorously reduce the emission of CFC, HCFC and HFC refrigerants to the atmosphere resulting from installation, operation, routine maintenance, or major service on this equipment. Always act in a responsible manner to conserve refrigerants for continued usage even when acceptable alternatives are available.

Recover and Recycle Refrigerants
Refrigerant used in centrifugal water chillers should be recovered and/or recycled for reuse, reprocessed (reclaimed), or properly disposed of, whenever it is removed from the equipment. Never release to atmosphere! Always determine recycle or reclaim requirements of the refrigerant before beginning recover procedure. Obtain a chemical analysis of the refrigerant if necessary. (Questions about recovered refrigerant and acceptable refrigerant quality standards are addressed in ARI Standard 700.)

Refrigerant Handling and Safety
Consult manufacturer's Material Safety Data Sheets (MSDS) on refrigerants being handled to understand health, safety, storage, handling and disposal requirements. Use approved containment vessels and refer to appropriate safety standards. Comply with all applicable transportation standards when shipping refrigerant containers.

Service Equipment and Procedures
To minimize refrigerant emissions while recovering the refrigerant, use recycling equipment such as a Trane recycle/recovery system or equivalent. Use equipment and methods which will pull the lowest possible system vacuum while recovering and condensing refrigerant. Equipment capable of pulling a vacuum of less than 1,000 microns (1.0 mm) of mercury is recommended. Do not open the unit to atmosphere for service work until the refrigerant charge is fully removed/recovered. When leak-testing with trace refrigerant and nitrogen, use HCFC-22 (R-22) rather than CFC-12 (R-12) or any other fully-halogenated refrigerant. Be aware of any new leak test methods which may eliminate refrigerants as a trace gas. Evacuation prior to charging should be done with a vacuum pump capable of pulling a vacuum of 1000 microns (1.0 mm) of mercury or less. The unit should stand for 12 hours and the vacuum should not rise above 2500 microns (2.5 mm) of mercury. A rise above 2500 microns (2.5 mm) of mercury indicates a leak test is required to locate and repair any leaks. A leak test will be required on any repaired area. Charge refrigerant into the machine only when it is determined that the machine does not leak or contain moisture. Charge refrigerant into the machine by weight. A proper charge is required for efficient machine operation. When charging is complete purge or drain charging lines into an approved refrigerant container. Seal all used refrigerant containers with approved closure devices to prevent unused refrigerant from escaping to the atmosphere. Take extra care to properly maintain all service equipment directly. Supporting refrigerant service work such as gauges hoses vacuum pumps and recycling equipment. When cleaning system components or parts avoid using CFC-11 (R-11) or CFC-113 (R-113). Use only cleaning-solvents that do not have ozone depletion factors. Property dispose of used materials. Refrigeration system cleanup methods using filters and driers are preferred. Maintain the purge unit on centrifugal water chillers in proper working condition. An improperly maintained purge unit can cause significant refrigerant emissions to the atmosphere. Consider replacing older operational purge units with the new Trane Purifier Purge unit. Excessive purge operation is an indication of possible refrigerant leakage. Check for leaks when excessive purge operation is observed.

Future Developments
Keep abreast of unit enhancements, conversion refrigerants, compatible parts and manufacturer's recommendations which will reduce refrigerant emissions and increase equipment operating efficiencies. Follow specific manufacturers guidelines for conversion of existing equipment. Use only Trane approved gaskets O-rings, oil filters and other components on Trane centrifugal water chillers or CenTraVacs. In order to assist in reducing power generation requirements always attempt to improve chiller equipment performance with improved maintenance operations which will help conserve energy resources. Items to be considered include tube cleanliness, proper water flows, correct refrigerant charge, cooling tower maintenance and proper operation.

General Information

Literature Change History

CTV-IN-1 (February 1996)

Original issue of manual; specifically intended for use by experienced service technicians.

Warnings and Cautions

Notice that warnings and cautions appear at appropriate intervals throughout this manual.

⚠ WARNINGS!
are provided to alert service technicians and other personnel to potential hazards that could result in serious personal injury or death.

⚠ Cautions:
are provided to alert personnel to conditions which could result in moderate or minor personal injury or damage to equipment or property.

Your personal safety and the proper operation of this machine depend upon precautions. The Trane Company assumes no liability for installation or service procedures performed by unqualified personnel.

Nameplates

Each retrofitted chiller is issued a new Trane nameplate that records the chiller's new Trane serial number, order number and model number. This nameplate facilitates owner service support through parts identification and engineering records retrieval. Install the new nameplate on the unit control panel.

Important: Do not remove the original nameplate.

Contents of Retrofit Package:

Each retrofit package is configured and uniquely different. As such, it is impossible to include a drawing and parts list of the retrofit package in this manual. The package will include gaskets, O-rings, impellers, oil pump motor, nuts, impeller shims, washers and a hermetic motor. When required, a new set of orifices (CVHE units) or distributor plates (other than CVHE) will be provided. When orifices require enlarging, a drawing giving the new dimension and a reaming procedure will be provided.

Included with each retrofit package is a configured drawing and bill of material. Use these items to inventory each part and insure that the retrofit package shipped is complete.

General Information

CenTraVac® Retrofit Package Explanation

A Trane Engineered Conversion is a comprehensive refrigerant compatibility service consisting of Trane materials, engineering analysis and technical support for the retrofit of Trane CenTraVac chillers. When upgraded, each CenTraVac chiller is optimized for its new operating conditions. Impellers and orifice plates are resized based on the new refrigerant pressures, temperatures, densities and mass flow rates calculated for the application. This assures that the upgraded chiller will continue to provide the best possible efficiency and capacity. To ensure chiller reliability, Trane developed new materials and rigorously tested them for compatibility with HCFC-123. These materials are used in components such as gaskets, O-rings, hermetic motors and vendor provided components.

Because of the configured nature of the retrofit package, this manual is not intended to give step by step instructions. Instead, use this manual as a guide when performing an HCFC-123 Engineered Conversion on a Trane CenTraVac.

Retrofit Responsibility

The purpose of Table 1 is to aid coordination of the machine's retrofit. Use the table to indicate the responsibilities of the contractor and those of the Trane Company.

Table 1 - Contractor's List

	Contractors Reference List	Material by		Installation by	
	Item	Trane	Other	Trane	Other
1	Run unit and log pre-retrofit operating data				
2	Verify machine is properly grounded.				
3	Remove required electrical connections.				
4	Drain water boxes.				
5	Remove required insulation.				
6	Install dowel pins, if required.				
7	Evacuate refrigerant.				
8	Secure lifting equipment and rigging.				
9	Perform retrofit - replace motor, impellers, orifice plates, etc.				
10	Reassemble using new gaskets, O-rings, etc.				
11	Pressure test and repair all leaks.				
12	Evacuate chiller and perform a standing vacuum rise test.				
13	Refill system with water.				
14	Charge chiller with new refrigerant.				
15	If input current requirements have changed, verify that branch circuit requirements are in accordance with NEC and the authority having jurisdiction.				
16	Make electrical connection.				
17	Spot paint the chiller as necessary.				
18	Replace/repair insulation.				
19	Change compressor oil after reassembly.				
20	Run unit and log for proper operation.				
21	Install new nameplate.				
22	Clean up jobsite.				
23	Inspect equipment room to ensure requirements of ASHRAE Standard 15 have been met.				
24	Instruct facility personnel on operation, safety requirements and maintenance.				

Prior to Retrofit

Log Pre-Retrofit Operating Data

Prior to performing the conversion, run the unit and log operating data. See Retrofit Log Sheet on page 26. This data will be used as a baseline and compared to operating data obtained after the retrofit.

⚠ WARNING!
To prevent injury or death due to electrical shock or contact with moving parts, lock unit disconnect switch in open position.

Close all chilled water and condenser water supply and return valves and drain the water boxes. Open all electrical disconnects and verify the power has been removed.

CVHE Doweling Procedure

If the CVHE volute was not factory doweled, doweling must be performed before proceeding.

The alignment of the compressor/motor assembly is determined by the position of the discharge volute. A shift in volute position at either the discharge flange or the compressor foot can change the suction elbow to compressor alignment. When the suction elbow is tightened to final torque, the compressor/motor assembly can shift from its original position. The resulting interference between seals and rotating components can adversely affect machine performance.

The third stage volute must be doweled at the discharge flange and at the compressor foot.

The dowel pins, see Figure 1, are Trane part number PIN0084. The Trane dowel pins have a threaded end so a nut can be used to pull them off easily for future service. Three pins are required to dowel the volute.

The following tools will be required:

- Drill bit for 7/16" or 29/64" diameter
- Tapered reamer for 0.25" per foot (or No. 8 dowel)
- No. 8 dowel pins (threaded end for easy removal)
- Various hand tools

Dowel the condenser discharge flange at **two** locations and the compressor foot at **one** point. **The drilled holes into the discharge flange of the condenser should be no deeper than the existing bolt holes.** Deeper holes will penetrate the flange and cause refrigerant leakage. The same size dowel pins can be used in all locations.

Use the 29/64" drill bit and tapered reamer at the locations indicated in Figures 2 and 3. The pilot area of the reamer must be removed to ream those holes that are blind. The holes should not penetrate the flange. Install the dowel pins.

Figure 1 - Dowel Pin

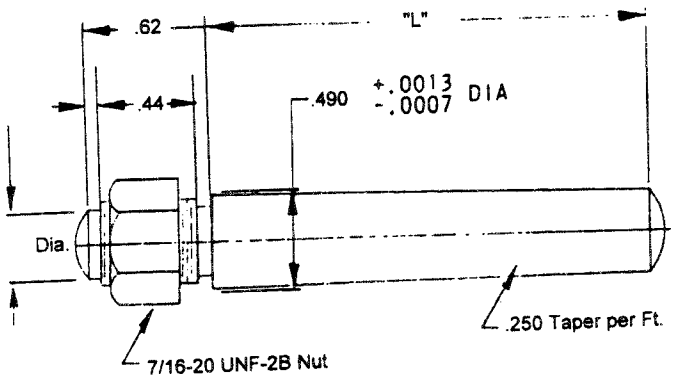

Prior to Retrofit

Figure 2 - Discharge Flange

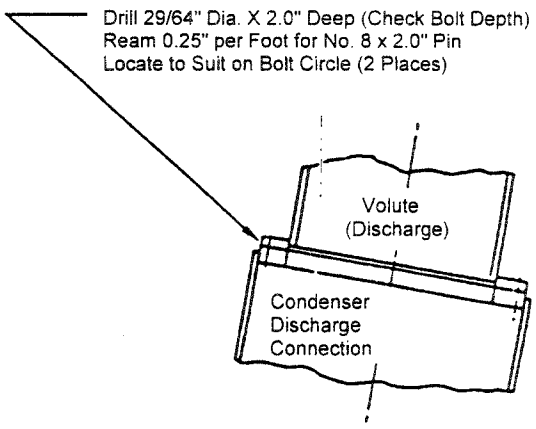

Figure 3 - Compressor Foot Doweling

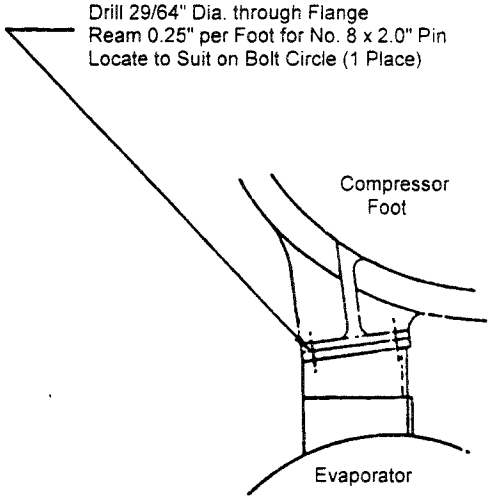

Evacuate Refrigerant

⚠ WARNING!
To avoid injury or death due to inhalation of, or skin exposure to refrigerant, closely follow all safety procedures described in the Material Safety Data Sheet for the refrigerant and to all labels on refrigerant containers. Certain procedures common to refrigeration system service may expose operating and/or servicing personnel to liquid and/or vaporous refrigerant.

Remove all of the refrigerant charge using UL approved recycling equipment and follow proper handling procedures.

Evacuation should be done with a vacuum pump capable of pulling a vacuum of 1.0mm of mercury or less.

Bring unit pressure back to atmosphere using dry nitrogen to prevent rusting.

Scribing

The casing parts (suction cover, interstage casings and volute flanges) on CVHE units should be scribed on both sides so they can be realigned properly during reassembly. This will insure the suction elbow will fit properly without causing misalignment of the compressor.

Performing the Retrofit

Disassembly

Set up proper rigging and begin unit disassembly. As components are being removed, record all tolerances and match mark components so they may be reassembled in their original position. Make sure all items removed from the unit are properly covered and protected from rusting.

The internal condition of the chiller at the time of disassembly is an important factor to the success of a retrofit. Problems identified during disassembly with the inlet vanes, impellers, eliminators, or rust in the shells should be immediately brought to the attention of the customer.

Compressor

Note: If a CVHE style unit was originally built using a trim balance nut, the weights should be removed from the nut. A standard nut (supplied in the package) should be used when rebuilding the compressor.

Complete the compressor tear down. During the tear down process, be sure to mark each component to indicate its relative position on the shaft.

Motor Replacement

Meggar test the new motor, check shaft runout and end play (if appropriate) before proceeding with the compressor rebuild. Any concealed shipping damage should be immediately brought to the attention of the shipper.

On CVHE units, particular attention should be given to the original tolerance of the oil seal assembly. The allowable (total) clearance between the shaft and the oil seal should be between 0.004" to 0.007". The clearance radially should be no more than 0.002 to 0.0035". Clearance in excess of this may lead to oil loss problems. If the seal is beyond the allowable clearance it must be replaced.

In general, the conversion package will be provided with a like motor wherever possible. When it becomes necessary to provide a different style motor, there will likely be some piping modifications required. When this is required, a piping modification kit will be provided for PCV units with the retrofit package. When necessary, a new conduit box and cover will be included in the package.

When retrofitting a PCV or CV unit from an old style motor to the newer liquid cooled rotor designs, it will be necessary to make piping modifications. This applies when changing from an RCS style motor to an RPS or RVS style (see Appendix A) or from an RCC to the RVX style (see Appendix B).

In addition, the excess refrigerant drain line on the RPS and RVS style motors should have a filter screen installed as explained in Appendix C.

Performing the Retrofit

Oil

Drain the oil sump thoroughly and dispose of the waste oil in a manner consistent with all state, federal and local regulations for disposal of oil. Disassemble the oil sump head and clean the inside of the sump. The oil sump at this point should be modified to provide the necessary fittings to add an ejector assembly if necessary to insure proper oil return. See Appendix D. If required, replace the oil pump motor. Replace the oil regulating valve and reassemble the oil sump.

Drain oil from the oil filter assembly and remove the filter. Place the used oil filter in a resealable container. Follow all state, federal and local regulations for disposal of filter. Clean the filter holder and install a new filter or element. At this point you may want to install ball valves similar to the current CVHE's to help facilitate future oil filter changes. See Appendix E. Charge the oil sump with OIL22 to the appropriate level.

Oil Drain Hoses

Always replace the existing oil drain hoses with the new ones provided in the retrofit package. It is recommended that the hose clamps be inspected and new ones used when necessary. Using two clamps for the bottom connection on the oil drain line is advised. The oil drain pipe should be checked to ensure it is round, so the hose will seal properly.

Air Run

The motor should be air run without impellers to measure oil flows. Refer to Appendix F for a discussion on oil flow measurement.

⚠ Caution: To prevent possible equipment damage when the compressor is air-run (with or without the suction elbow), exercise these precautions:
[ ] Disable the transition circuit so that the starter cannot transition.
[ ] Isolate the water flows through the chiller to prevent condensate from forming on the tubes.
[ ] Do not start the compressor motor more than five times (three times for across-the-line starters) without refrigerant cooling. After the fifth start (third start for across-the-line starters), allow the motor to cool down for at least 24 hours.

⚠ WARNING!
Disconnect electrical power supply to prevent injury death due to electrical shock.

Performing the Retrofit

To deactivate the transition circuit on a CVHE with a "Classic" Control Panel in the "Wye" configuration:

1. Deactivate the starter panel's "transition circuit". To do this, locate SSOL module A1 in the starter panel and remove Wire No. 125 from Terminal D1 (**or** remove Wire No. 127 from Terminal D2). Insulate the end of the disconnected wire with black electrician's tape.
2. Deactivate the "distribution fault signal" circuit breaker (CB15) at the SSOL (A1). To do this, disconnect Wire No. 133 from Terminal E4 (**or** remove Wire No. 132 from Terminal E3). Insulate the end of the disconnected wire with black electrician's tape.

Likewise to deactivate the transition circuit on a CVHE with a UCP1 Control Panel in the "Wye" configuration:

1. Disconnect Wires 131B and 132B from micro module Terminals 1TB4-5 and -6 respectively. Wrap the exposed end of each lead with electrician's tape.
2. Disconnect Wires 10C and 12A from micro module Terminals 1TB2-5 and -6 in the UCP. Insulate the free end of each lead with electrician's tape.
3. Connect Terminals 1TB4-5 to 1TB2-5, and 1TB4-6 to 1TB2-6. Use #14 AWG, 600V copper wire.

Note: These connections prevent the starter from "transitioning" the compressor motor into the "delta" configuration.

⚠ Caution:
Exercise extreme care when connecting the 1TB4 terminals in the low-voltage (<30V) section of the UCP to the 1TB2 terminals in the 115V section. Improper connections in these temporary circuits can result in fatal damage to micro module 1U3.

Compressor Reassembly

Reassemble the compressor making sure all components are installed properly. Record all tolerances. Clean all casing parts thoroughly to remove the previous O-ring compound. The compressor O-rings should be coated with Loctite 515 gasket eliminator. See Appendix G for information on using and applying the sealant.

Note: Gortex joint sealant (1/8" width) should be used for the elbow to compressor joint.

Before tightening any bolts, the locating dowel pins must be installed. Tighten all bolts to a snug tightness, following the appropriate numerical sequence for the flange. Repeat this sequence to apply the final torque to each bolt. Flange bolt torque requirements are given in Table 2.

Table 2 - Flange Bolt Torque Recommendations for O-Ring and Flat-Gasket Piping Connections (See Note).

Bolt Size (In.)	Gasket Type	
	O-Ring	Flat
3/8	25 (34)	12-18 (16-24)
1/2	70 (95)	33-50 (45-68)
5/8	150 (203)	70-90 (95-122)
3/4	250 (339)	105-155 (142-210)

Note: Torques provided in ft./lbs (Newton/meters).

Continue the standard rebuild procedure, including reinstallation of the inlet guide vanes. After the vanes are installed, lock the vanes in the closed position and again air-run the compressor and monitor its vibration levels.

Vibration Monitoring

Following the air-run procedure documented previously, start the chiller and run it for five minutes before recording any vibration readings. During this "warm-up" period, monitor the unit's vibration level with a vibration analyzer set-up for running speed (i.e. 60hz or 3600 RPM).

Once the five minute "warm-up" expires, take a complete set of vibration readings. The horizontal and vertical vibration measurements should not exceed 0.10 in/sec peak for CVHE units. Vibration levels for units other than CVHE's should not exceed 1.0 mil displacement or 0.19 in/sec at shaft operating speed (nominally 3575 cpm).

If the levels of vibration are acceptable, continue rebuilding the unit.

When vibration levels on CVHE chillers exceed 0.10 in/sec, a trim balance will need to be performed. See Appendix H. For other style units it may be necessary to have the impellers and motor rotor assembly rechecked to insure they are within factory specifications.

Performing the Retrofit

Threaded Pipe Joints

It is advisable to disassemble all threaded pipe joints while doing a major overhaul or retrofit on an older chiller. The joints should be cleaned and resealed using a thread sealing compound compatible with both refrigerant CFC-11 and HCFC-123. Threaded pipe joints on current production chiller units use either Loctite 277 or La-Co Slic-Tite paste with Teflon, except where the joint is close to a braze connection and may be subjected to extreme heat. Where heat is a major concern, Teflon tape should be used. The Loctite 277 thread locker compound has been approved for use as a pipe sealer in this application and requires approximately 24 hours set time before being exposed to refrigerants. Set time before exposure will likely be a requirement for most of the pipe sealing compounds available today. There are undoubtedly many other pipe sealing compounds that are compatible in this type of application with refrigerants CFC-11 and HCFC-123. Before using other thread sealers check with the manufacturer of the compound to verify compatibility and reliability through laboratory testing and field experience in use.

Valves

Units with factory or field installed electrically actuated hot gas bypass or free cooling valves may require rebuild or replacement. Prior to 1994, the Trane Company used four different valve manufacturers.

- Valves manufactured by **Posi-Seal**, will in most cases require rebuild kits in order to be made compatible. There were a few Posi-Seal valves manufactured with resilient internal seats that will require complete valve replacement since new seats are not available in a compatible material.
- Valves manufactured by **Keystone** and **Jamesbury** are compatible.
- In a very limited number of units **Dover-Norris** valves were also used. The Dover-Norris valves are not compatible and must be replaced since rebuild kits are not available.

In all cases, the unit should be inspected to determine the valve manufacturer and their model numbers. This information is necessary in order to insure the correct material or valves are furnished and to determine what work will be required.

Note: Units with pnuematically actuated hot gas valves have stem seals and other internal components that are compatible. In all cases we recommend new flange gaskets be used.

Performing the Retrofit

Orifice Replacement

- **PCV,CVHA,CV,CVHB**

When a new set of orifices are required for these model units, the retrofit package will include a new set of distributor plates for installation in the condenser and evaporator liquid lines. The package also includes a drawing that highlights the new well rounded orifice diameter that will be required. The well rounded orifice (both) should be enlarged by using a proper diameter steel Hawg cutter, a tapered reamer or a die grinder with carbide bur to increase the size to the new specified diameter. Discard the old distributor plates and install the new ones provided.

- **CVHE**

When orifices are required, new orifice assemblies will be provided for the condenser liquid line, evaporator liquid line and the economizer. For units which do not have the removable orifice option, it will be necessary to remove the entire liquid sump from the bottom of the economizer.

After the sump is removed, the orifice welds must be ground away so the new orifice can be installed. Make sure the new orifice is welded into the economizer at the same depth as the original to insure there will be no restrictions to flow. The sump should be welded back onto the economizer.

Performing the Retrofit

Additional Unit Modifications and Enhancements

- **All Units**

It is advisable to add the necessary fittings so that an InterClean™ system can be added to the chiller to remove any small amounts of debris (typically rust) or old compressor oil etc., that may still be left in the unit after the retrofit is completed. The fittings that are added for connection of an InterClean system can also be used as access points for future use of recovery equipment etc. when servicing the chiller.

- **CVHE**

Older style CVHE's that had the oil sump vent line connected to the suction elbow should be repiped, see Appendix I, to include a vent line solenoid valve, timer and a larger 1-1/8" line. The larger vent line, solenoid valve, and timer should be installed on all units. CVHE units should be modified to have two eductors similar to new production units. One is used to return oil from the suction cover and the other returns oil directly from the evaporator. Make sure that the system is clean so that debris does not get into the sump as indicated above.

- **CV, CVHB**

The oil sump vent line valve should be located on the suction elbow. An oil return line from the suction cover to the oil sump should also be added. See Appendix J.

- **CVHE035-050 with Louis Allis DRV5-1740 Motor**

When a DRV5-1740 Louis Allis motor is replaced or is used as a replacement for a Reliance motor, replace the motor liquid feed line orifice with a number three or enlarge the existing number two orifice to a 0.390 inch diameter. The enlarged orifiice will provide improved liquid refrigerant flow to the motor.

- **CVHE022 - 032 units with DRV3-1500 motors**

Some of the earlier units of this size with nominal 1500 frame motors used a number one motor cooling orifice (0.250" dia.). If the unit is determined to have a number one orifice, it should be increased to a diameter of 0.312".

Completing the Retrofit

After the unit has been reassembled, do the following to complete the retrofit job.

- Make sure that all other field added components such as liquid level indicators, head pressure controls, etc. have been reviewed for compatibility.
- After the unit has been reassembled, it should be pressure tested using dry nitrogen and soap solution. Repair all leaks and evacuate the unit to 1.0 millimeters. Once evacuated the chiller will be required to pass a standing vacuum rise test.
- Inspect the equipment room to insure the requirements of ASHRAE Standard 15 have been met. This will require:
  - — A refrigerant monitor
  - — Self Contained Breathing Apparatus (SCBA)
  - — Ventilation
  - — The purge relief is piped into the rupture relief vent line to outside the building.
- Refill the chilled and condenser water systems.
- Charge the chiller with the new refrigerant. Refer to Appendix K for proper refrigerant charge. Make sure vapor only is charged until the unit pressure is above the vapor pressure equivalent to the freezing point of water. Always run the evaporator pump while charging the unit to prevent freeze-ups from occurring. Charge the new refrigerant through a filter drier and moisture indicating sight glass.
- Change compressor oil after reassembly. Use only Trane approved oil.
- Run the unit and log it for proper operation. If an InterClean™ has been installed, the refrigerant angle valve on the liquid supply line should be adjusted to maintain a proper level in the tank. If an eductor has been connected directly to the oil sump, it may be necessary to adjust the volume of flow to insure the oil sump temperature does not drop too low from excessive refrigerant flow. After cleanup, the InterClean or the eductor system can be turned off and only used if future oil migration occurs due to unusual operating conditions etc.
- Spot paint the chiller as necessary and repair or replace all insulation.
- Install the new nameplate and the R123 label on the unit control panel. **Do not** remove the existing nameplate.
- Instruct the facilities operating personnel on proper procedures to follow when operating the chiller, the requirements for safely handling refrigerants, and the maintenance of the chiller and ancillary equipment such as the monitor etc.

After the Retrofit

After a few weeks of operation, the following is advisable:

- Recheck bolt torques. This is especially critical in gasketed joints such as terminal boards, liquid lines, suction and discharge pipes etc.
- Take a refrigerant and oil sample and have it analyzed.

CenTraVac® Engineered Conversion Retrofit / Commissioning Checklist and Test Log

Job Name _____ **Location** _____

Model # _____ **Serial #** _____

Sales Order # _____ **Conversion Date** _____

NOTE: The Unit Installation, Operation and Maintenance Manuals, Submittals, and Design Specifications must be used in conjunction with this checklist.

I. PRE-RETROFIT PROCEDURE

☐ **A. Run unit and log pre-retrofit operating data on the Retrofit Log Sheet.**

☐ **B. Electrical Connections**

Verify machine is properly grounded. Open disconnects and remove required electrical connections.

☐ **C. Drain Water Boxes**

☐ **D. Remove Required Insulation**

☐ **E. Install Dowel Pins, if required.**

II. RETROFIT PROCEDURES

A. Evacuate Refrigerant

B. Disassemble Unit

- ☐ 1. Record tolerances
- ☐ 2. Match mark/scribe components
- ☐ 3. Inspect internal condition of chiller

C. Motor Replacement

- ☐ 1. Meggar the new motor.
- ☐ 2. Check runout and end play.
- ☐ 3. Check oil seal assembly (CVHE)
- ☐ 4. Piping modifications (PCV or CV, if required)
- ☐ 5. Filter screen installation (PCV/CVHA, if required)

D. Compressor

- ☐ 1. Remove elbow and IGVs
- ☐ 2. Record location of balance weights on trim balance nut (if required)
- ☐ 3. Mark each component to indicate relative position on shaft

E. Oil

- ☐ 1. Drain/dispose oil
- ☐ 2. Modify oil sump to add eductor assembly (if required)
- ☐ 3. Replace oil pump motor (if required)
- ☐ 4. Replace oil regulating valve.
- ☐ 5. Replace/dispose oil filter
- ☐ 6. Modify piping/install ball valves (if desired)
- ☐ 7. Replace existing drain hoses

F. Air Run

- ☐ 1. Measure oil flows

G. Reassemble Compressor

- ☐ 1. Record all tolerances
- ☐ 2. Install impellers, gaskets, O-rings, bolts, nuts, washers, etc.
- ☐ 3. Reinstall inlet guide vanes
- ☐ 4. Air run and monitor vibration
- ☐ 5. Install suction elbow
- ☐ 6. Tighten all bolts to recommended bolt torques.

H. Pipe Threads

- ☐ 1. Disassemble and clean threads
- ☐ 2. Reseal and reassemble

I. Valves

- ☐ 1. Replace/rebuild valves (if required)

J. Orifice Replacement

- ☐ 1. Replace orifices (CVHE, if required)
- ☐ 2. Enlarge well rounded orifice (PCV/CVHA/CV/CVHB, if required)

K. Other Modifications/Enhancements

- ☐ 1. Add Interclean™ system (if desired)
- ☐ 2. Repipe oil sump vent line (CVHE)
- ☐ 3. Relocate oil sump vent line (CV, CVHB)
- ☐ 4. Replace motor liquid feed line orifice (CVHE 035-050 with Louis Allis DRV5-1740 motor or CVHE022-032 with DRV3-1500 frame motors)

L. Complete the Retrofit

- ☐ 1. Insure field added components have been reviewed for compatability
- ☐ 2. Pressure test unit and perform standing vacuum rise test
- ☐ 3. Inspect equipment room to insure requirements of ASHRAE Standard 15 have been met
- ☐ 4. Refill water systems
- ☐ 5. Charge chiller with new refrigerant
- ☐ 6. Spot paint and repair or replace insulation
- ☐ 7. Change compressor oil
- ☐ 8. Install new nameplate

III. PRECOMMISSIONING PROCEDURES

☐ **A. Obtain Design (order) Specification Data**

This indicates the design criteria of the particular unit. A unit cannot be properly retrofitted/commissioned unless this data is known. It is the responsibility of the selling office to furnish this data.

☐ **B. Obtain Wiring Diagrams**

The "as-wired" electrical diagram should be compatable with the recommended Trane submittals and diagrams. Are customer added external/remote control circuits compatable? Yes ☐ No ☐

☐ **C. General Installation Observations**

☐ 1. Is the water piping correctly installed? Yes ☐ No ☐
Flow Switches Yes ☐ No ☐ Pressure Gauges Yes ☐ No ☐

Isolation Valves Yes ☐ No ☐ Flow Balancing Valves Yes ☐ No ☐

Thermometer Wells Yes ☐ No ☐ Vent Cocks and Drains Yes ☐ No ☐

☐ 2. Have proper clearances around the unit been maintained? Yes ☐ No ☐

☐ 3. Is power wiring of adequate ampacity and correct voltage? Yes ☐ No ☐

Are fuses or circuit breakers of the correct value or type? Yes ☐ No ☐

☐ 4. Is the unit base acceptable and level and is the unit on isolators (rubber as supplied by Trane or springtype)? Yes ☐ No ☐

☐ 5. Have the Class 2 (less than 30 volts) circuits been properly isolated from the higher voltage control and power circuits? Yes ☐ No ☐

☐ **D. Comments** _____

_____

_____

IV. COMMISSIONING PROCEDURES

A. Pre-start operations

1. Calibration of Controls

☐ Calibrate all controls per original unit specifications shown in the operation and maintenance manual.

2. Condenser

☐ Calibrated thermometers and pressure gauges installed in/out of condenser on machine side of any valve or elbow.

☐ If condenser pump controlled by unit control panel, is field wiring correct and complete?

☐ Condenser pump(s) run, system and strainers properly cleaned and/or flushed.

☐ Condenser water strainer in close proximity to entering connection of condenser.

☐ Provisions installed to properly maintain water treatment additives.

☐ Initial water treatment added to system.

☐ Flow or differential pressure switch installed and wired in series with auxiliary of pump motor starter. Operation of circuit verified.

☐ Condenser water flow balanced. Ft H20 PD design_____ Ft H20 actual_____

GPM design_____ GPM actual_____

3. Evaporator

☐ Calibrated thermometers and pressure gauges installed in/out of evaporator on machine side of any valve or elbow.

☐ If evaporator pump controlled by unit control panel, is field wiring correct and complete?

☐ Evaporator pump(s) run, system and strainers properly cleaned and/or flushed.

☐ Evaporator water strainer in close proximity to entering connection of evaporator.

☐ Provisions installed to properly maintain water treatment additives.

☐ Initial water treatment added to system.

☐ Flow or differential pressure switch installed and wired in series with auxiliary of pump motor starter. Operation of circuit verified.

☐ Evaporator water flow balanced. Ft H20 PD design_____ Ft H20 actual_____

GPM design_____ GPM actual_____

4. Electrical and Controls

a. Motor starter panel

- ☐ All terminals tightened.
- ☐ Wiring free from abrasion, kinks, and sharp corners.
- ☐ Contactors and relays have freedom of movement.
- ☐ All contacts are free of corrosion or dirt. Panel is free of dust, debris etc.
- ☐ Check the correctness of the power connections from the starter to the motor.
- ☐ Check the wiring to the starter for size, voltage, and correct phase rotation (A-L1, B-L2, C-L3).
- ☐ Check for equal phase representation in each power wiring conduit.

b. Control panel

- ☐ All terminals tightened.
- ☐ Wires free from abrasion, kinks, sharp corners.
- ☐ Low voltage wires are isolated from high voltage wires.
- ☐ Panel is free of debris, dust, etc.
- ☐ Check the setting of the oil pressure regulating valve
    1. Adjust the oil pressure regulating valve to maintain proper oil pressure as described in the unit Operation And Maintenance Manual.
- ☐ Check vane operator and vanes.
    1. Vane movement is smooth to open/close.

B. Preparation for Start-up

1. Electrical

☐ Power up the motor starter. Check for control voltage at control panel terminals

☐ Check current to the oil sump heater. _____ amperes

☐ As the oil heats up, finish any operations not yet completed in preparation for starting the unit.

C. Chiller Start-up

1. Make all preliminary checks.

☐ Oil temp, oil level, chilled water flow, chilled water load available (cooling units on) etc.

2. Start the unit.

☐ If the phase rotation of the electrical power has not been positivly confirmed, the actual rotation of the motor must be checked. Observe the rotation of the motor shaft through the sight glass on the end of the motor at the moment of start-up. Rotation must be CLOCKWISE. If the phase sequence is incorrect, then L1 and L3 power leads to the starter must be reversed.

☐ As the unit starts and runs, observe closely all operating conditions.

☐ Readjust the oil pressure regulator to.the proper setting.

☐ After the unit has the system down to design leaving chilled water temp and is under control, and the purge is no longer relieving non-condensables, begin taking the startup test log. Log operating data on the conversion log sheet.

☐ When the logging is complete, shut the chiller down. Allow the unit to sit idle for 5-10 minutes. Attach a piece of clear plastic hose between the 1/2 inch valve at the bottom of the evaporator and the 1/4 inch valve near the top of the evaporator. Open the valves and record or mark permanently the refrigerant level in the hose. At a later time, the refrigerant charge can be easily checked and verified.

☐ Restart the chiller and carefully observe the starting and loading sequence.

3. Instructions to the Chiller Operator.

☐ Instructions for starting, operating, and shutting down.

☐ Instructions for logging the unit.

☐ Instructions for periodic maintenance.

D. After 2 weeks of operation.

1. Recheck bolt torques.
2. Take a refrigerant and oil sample and have it analyzed.

E. Comments and/or Recommendations:

_____

_____

_____

_____

_____

_____

Service Technician Signature Date

CenTraVac® Engineered Conversion Retrofit Log

SALES ORDER # _____ **LOCATION** _____
MODEL # _____ **SERIAL #** _____

DESIGN CONDITIONS **
**From design specification
DEG F _____
DEG F _____
DEG F _____
DEG F _____
DEG F _____

GPM _____
GPM _____

PSID _____
(UNIT "ON",
115 TO 150 ° F)

DESIGN RLA _____
DESIGN KW _____

DESIGN VOLTS _____
DESIGN HZ _____

CHILLER LOG:	Pre Retrofit	Post Retrofit
CHILLER OPERATING MODE		
ACTIVE CHILLED WATER STPT		
EVAP LEAVING WATER TEMP		
EVAP ENTERING WATER TEMP		
CONDENSER ENTERING WATER		
CONDENSER LEAVING WATER		
ACTIVE CURRENT LIMIT STPT		
EVAPORATOR WATER FLOW		
CONDENSER WATER FLOW		
OUTDOOR AIR TEMP		
REFRIGERANT LOG:		
RFGT TYPE		
EVAP RFGT PRESSURE		
COND RFGT PRESSURE		
SATURATED COND TEMP		
SATURATED EVAP RFGT TEMP		
COMPRESSOR LOG:		
DIFFERENTIAL OIL PRESSURE		
OIL TANK TEMPERATURE		
DISCHARGE OIL PRESSURE		
OIL TANK PRESSURE		
COMPRESSOR PHASE AMPS A		
COMPRESSOR PHASE AMPS B		
COMPRESSOR PHASE AMPS C		
COMPRESSOR VOLTAGE AB		
COMPRESSOR VOLTAGE BC		
COMPRESSOR VOLTAGE CA		
COMPRESSOR WINDING TEMP W1		
COMPRESSOR WINDING TEMP W2		
COMPRESSOR WINDING TEMP W3		
COMPRESSOR RUNNING TIME		
BEARING TEMPERATURE 1		
BEARING TEMPERATURE 2		
OPERATING OIL LEVEL		

FRONT PANEL CHILLED WTR SETPT: _____
LVG WTR TEMP CUTOUT SETPT: _____
CURRENT OVERLOAD SETTING #1: _____

DESIGN DELTA TEMP SETPT: _____
LOW RFGT TEMP CUTOUT SETPT: _____
CURRENT OVERLOAD SETTING #2: _____

EVAPORATOR WATER PRESSURE DROP:
DESIGN PSIG: _____ GPM: _____
ACTUAL PSIG: : _____ GPM:: _____

CONDENSER WATER PRESSURE DROP:
DESIGN PSIG: _____ GPM: _____
ACTUAL PSIG: : _____ GPM:: _____

PURGE
RUN HRS _____
SUCTEMP _____ ° F

MOTOR INSULATION MEG OHMS:
TER. 1 TO GND _____ TER. 1-2 _____ TER. 1-4 _____
TER. 2 TO GND _____ TER. 1-3 _____ TER. 2-5 _____
TER. 3 TO GND _____ TER. 2-3 _____ TER. 3-6 _____

MEGGAR VOLTAGE:

TECHNICIAN
OWNER'S REP
DATE

ACTIVE AND HISTORIC DIAGNOSTICS:

COMMENTS:

Appendix A
Piping Modifications - PCV

Required piping modifications when replacing a Louis Allis RCS frame motor or an old style General Electric motor with a Louis Allis RPS, RVS or a new style General Electric frame motor on Model PCV CenTraVacs®.

Discussion

The original Louis Allis RCS and General Electric motors had liquid refrigerant cooled stators. They also used refrigerant vapor from the economizer to cool the rotor and motor end windings. The Louis Allis RCS motors were replaced with the newer style RPS motors. The RPS style motors have stator shrouds. There is a refrigerant feed tube in the motor that directs a small amount of liquid from the end shroud onto the compressor end of the rotor for cooling the rotor.

The RPS style motors were replaced with RVS style Louis Allis motors. The RVS motors have a liquid jacket surrounding the stator with a slot in the center of the stator from which liquid refrigerant flows directly into the rotor cavity. The motor end windings are cooled by liquid splashed off the rotor ends directly onto the windings.

The RPS, RVS and new style General Electric motors all require drain lines to remove excess refrigerant which collects in the motor end bells.

The original General Electric motors have a cooling system identical to the Louis Allis RCS motors. The General Electric motors were later redesigned to have a cooling system similar to the RVS motor where liquid is fed to the rotor through a stator slot.

Piping Modification Procedure

The piping conversion package will include a drawing which shows proper piping procedures.

1. Cut a 1-3/16" diameter hole in the evaporator shell (terminal end). When cutting the hole through the evaporator shell, protect the eliminators from damage. Weld a pipe nipple to the shell.
2. Cut a 7/8" diameter hole in the evaporator shell near the bearing drain line (compressor end). Protect the eliminators from damage.
3. Install the new motor in the unit.
4. Assemble the terminal end refrigerant drain line. Be sure the pipe to flare adapter assembly at the evaporator contains an orifice.
5. Assemble the compressor end refrigerant drains line. Be sure the pipe to sweat adapter contains an orifice and screen assembly.
6. The PCV-2C - 2F RPS motors do not have an outer oil slinger on the compressor end, which the RCS motors have. The restricted end bearing is on the terminal end of RPS motors. A special spacer is provided in the kit.

Appendix B
Piping Modifications - CV

Required piping modifications when replacing a Louis Allis RCC frame motor with a Louis Allis RVX style motor on Model CV CenTraVacs®.

Figure 4 is a cross-section of the RVX motor showing the liquid and gas flow.

The RVX motor is cooled by liquid and gaseous refrigerant. The liquid refrigerant enters the motor housing from the side and flows into a chamber surrounding the stator. This liquid level is 4" to 7" above the center line of the motor. The liquid refrigerant that flashes off is vented from the top of the housing to the economizer. Some of the liquid refrigerant flows from the chamber through a slot in the stator into the windings and rotor area cooling this area. The excess liquid and gaseous refrigerant is drained from the bottom of the motor housing. The liquid indicator in the drain line should have a bubbling action in it, indicating proper refrigerant cooling. The motor temperature control (MTC) bulb well is in a new location as shown in Figure 4. The old MTC capillary tube is not long enough to reach the new bulb well location. A new MTC CNT0322 should be ordered when this occurs.

Because of the redesigned RVX motor cooling piping, there have been questions on how to fabricate the piping for the RVX motor. Figures 5-9 show the various piping arrangements of the redesigned RVX motor cooling piping.The piping components can be bought locally.

Note: A cleanable strainer is to be installed in the liquid supply line on all the CV sizes. Be sure the direction of flow is checked before you install the strainer.

Appendix B
Piping Modifications - CV

Figure 4 - Hermetic Type RVX Squirrel Cage

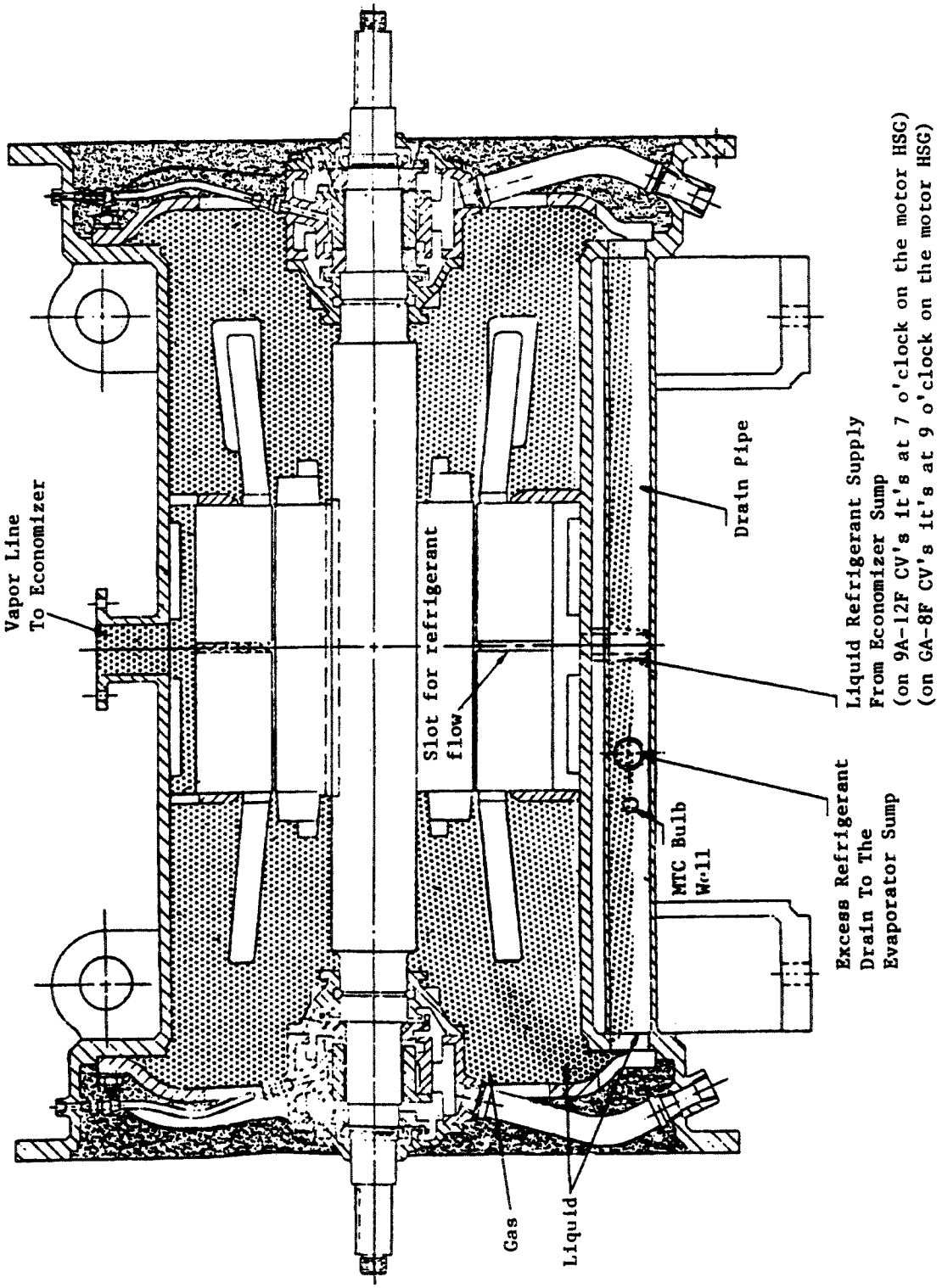

Appendix B
Piping Modifications - CV

Figure 5 - Loose Parts and Location Information CV6A, 6C, 6H, 6J and 7G

Notes:

1. All tube to steel fittings to be brazed per A.W.S. B Ag-1.
2. All copper to copper fittings to be brazed per A.W.S. B Cup 3.
3. (Item 11) Filter to be removed from strainer before brazing.

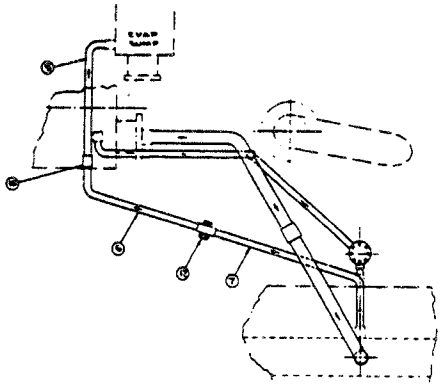

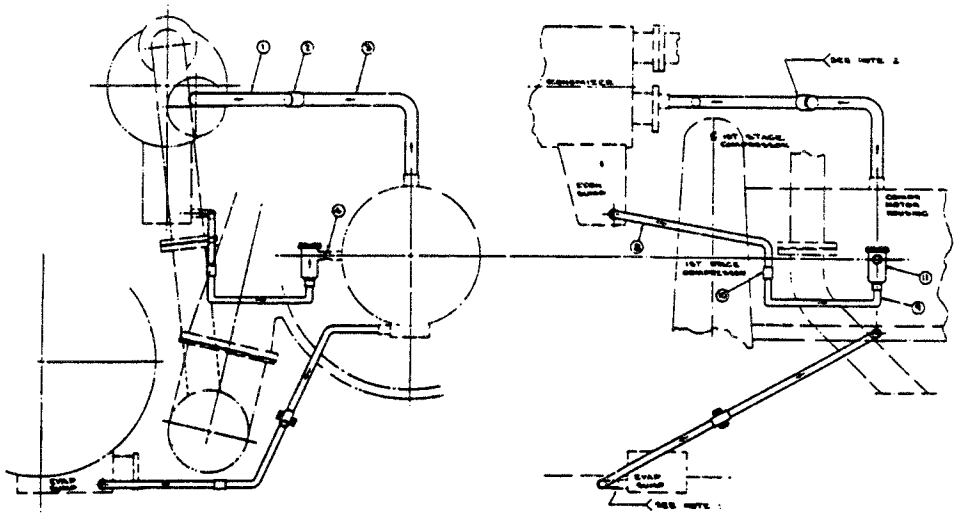

Ref. No.	Part Name	No. Req.
1	Tube (2-1/8 OD)	1
2	Coupling (2-1/8 OD)	1
3	Tube (2-1/8 OD)	1
4	Tube (1-1/8 OD)	1
5	Tube (1-1/8 OD)	1
6	Tube (1-1/8 OD)	1
7	Tube (1-1/8 OD)	1
8	Tube (1-1/8 OD)	1
9	Tube (1-1/8 OD)	1
10	Coupling (1-1/8 OD)	2
11	Strainer	1
12	Liquid Indicator	1

Appendix B
Piping Modifications - CV

Figure 6 - Loose Parts and Location Information CV8C

Notes:

1. All tube to steel fittings to be brazed per A.W.S. B Ag-1.
2. All copper to copper fittings to be brazed per A.W.S. B Cup 3.
3. (Item 11) Filter to be removed from strainer before brazing.

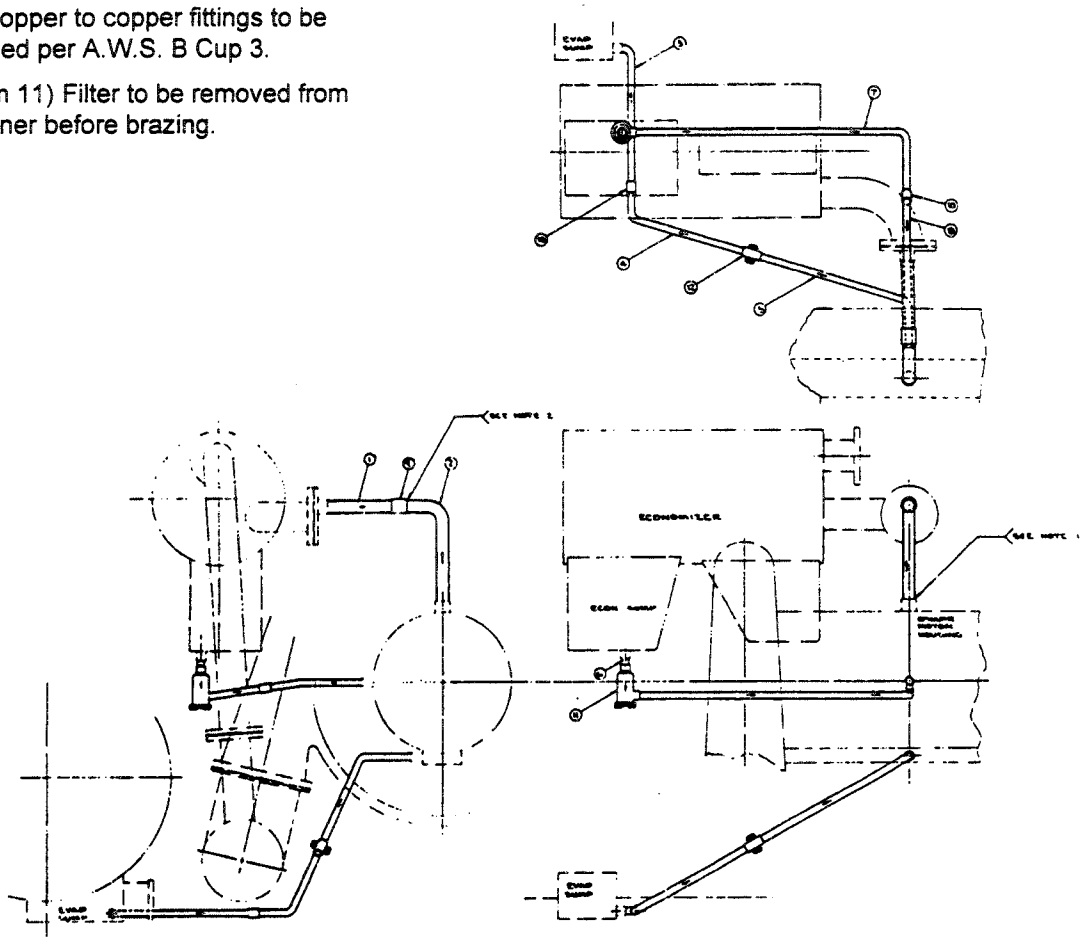

Ref. No.	Part Name	No. Req.
1	Tube (2-1/8 OD)	1
2	Tube (2-1/8 OD)	1
3	Tube (1-1/8 OD)	1
4	Tube (1-1/8 OD)	1
5	Tube (1-1/8 OD)	1
6	Tube (1-1/8 OD)	1
7	Tube (1-1/8 OD)	1
8	Tube (1-1/8 OD)	1
9	Coupling (2-1/8 OD)	1
10	Coupling (1-1/8 OD)	2
11	Strainer	1
12	Liquid Indicator	1

Appendix B
Piping Modifications - CV

Figure 7 - Loose Parts and Location Information CV9A

Notes:

1. All tube to steel fittings to be brazed per A.W.S. B Ag-1.
2. All copper to copper fittings to be brazed per A.W.S. B Cup 3.
3. (Item 11) Filter to be removed from strainer before brazing.

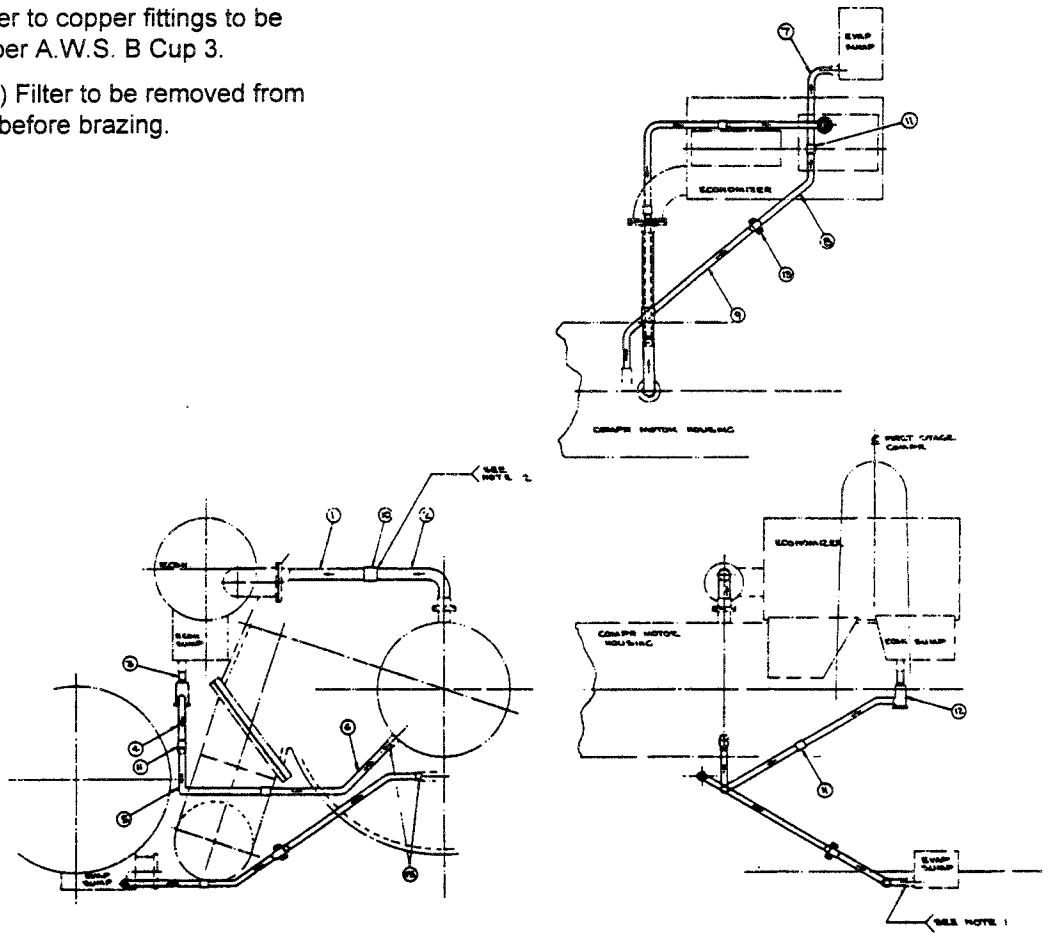

Ref. No.	Part Name	No. Req.
1	Tube (2-5/8 OD)	1
2	Tube (2-5/8 OD)	1
3	Tube (1-3/8 OD)	1
4	Tube (1-3/8 OD)	1
5	Tube (1-3/8 OD)	1
6	Tube (1-3/8 OD)	1
7	Tube (1-3/8 OD)	1
8	Tube (1-3/8 OD)	1
9	Tube (1-3/8 OD)	1
10	Coupling (2-5/8 OD)	1
11	Coupling (1-3/8 OD)	3
12	Strainer	1
13	Liquid Indicator	1
15	Reducer (1-5/8 x 1-3/8)	2

Appendix B
Piping Modifications - CV

Figure 8 - Loose Parts and Location Information CV9F and 10F

Notes:

1. All tube to steel fittings to be brazed per A.W.S. B Ag-1.
2. All copper to copper fittings to be brazed per A.W.S. B Cup 3.
3. (Item 11) Filter to be removed from strainer before brazing.

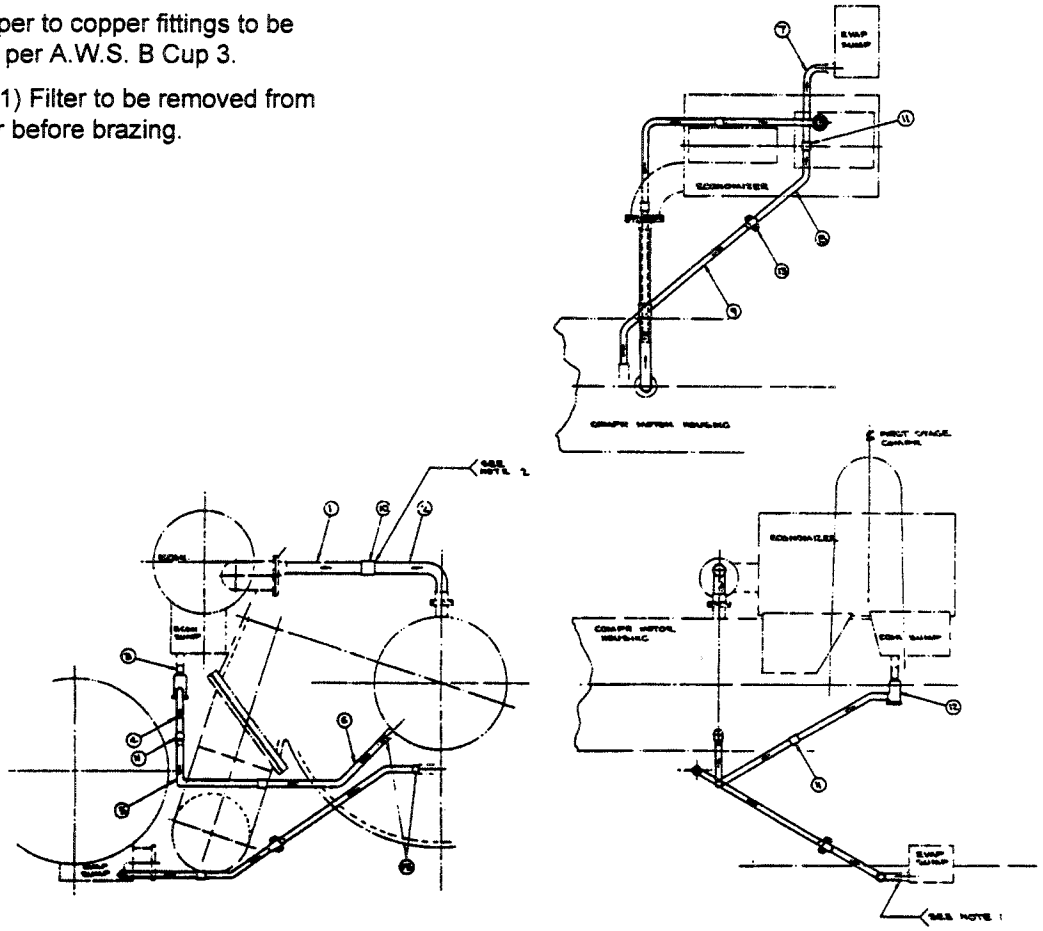

Ref. No.	Part Name	No. Req.
1	Tube (2-5/8 OD)	1
2	Tube (2-5/8 OD)	1
3	Tube (1-3/8 OD)	1
4	Tube (1-3/8 OD)	1
5	Tube (1-3/8 OD)	1
6	Tube (1-3/8 OD)	1
7	Tube (1-3/8 OD)	1
8	Tube (1-3/8 OD)	1
9	Tube (1-3/8 OD)	1
10	Coupling (2-5/8 OD)	1
11	Coupling (1-3/8 OD)	3
12	Strainer	1
13	Liquid Indicator	1
15	Reducer (1-5/8 x 1-3/8)	2

Appendix B
Piping Modifications - CV

Figure 9 - Loose Parts and Location Information CV10H and 12F

Notes:

1. All tube to steel fittings to be brazed per A.W.S. B Ag-1.
2. All copper to copper fittings to be brazed per A.W.S. B Cup 3.
3. (Item 11) Filter to be removed from strainer before brazing.

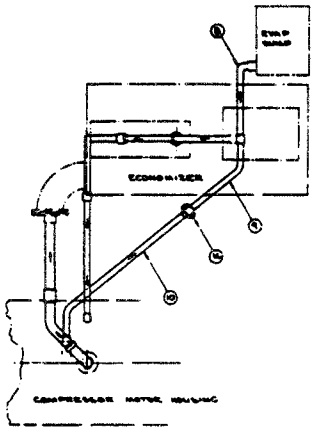

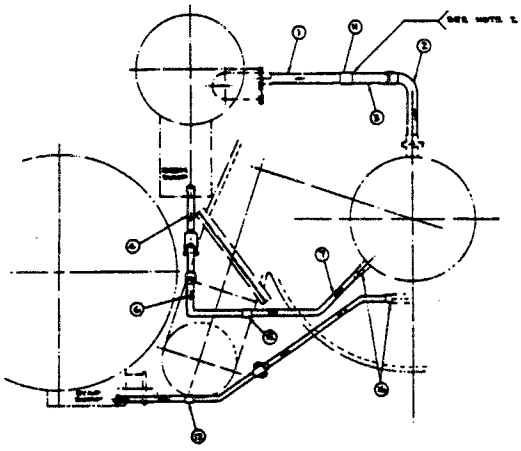

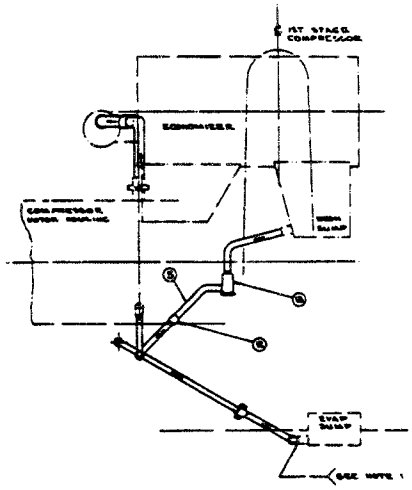

Ref. No.	Part Name	No. Req.
1	Tube (2-5/8 OD)	1
2	Tube (2-5/8 OD)	1
3	Tube (2-5/8 OD)	1
4	Tube (1-3/8 OD)	1
5	Tube (1-3/8 OD)	1
6	Tube (1-3/8 OD)	1
7	Tube (1-3/8 OD)	1
8	Tube (1-3/8 OD)	1
9	Tube (1-3/8 OD)	1
10	Tube (1-3/8 OD)	1
11	Coupling (2-5/8 OD)	1
12	Coupling (1-3/8 OD)	3
13	Strainer	1
14	Liquid Indicator	1
16	Reducer (1-5/8 x 1-3/8)	2

Appendix C
Refrigerant Filter Screen Installation

All field motor replacements with new style Louis Allis RVS or RPS built motors must have a screen installed on the compressor end orifice.

Should it become necessary to field fabricate a strainer screen, use the following procedure:

The special strainer screen must be made from a piece of #12 wire mesh (0.025" wire) which is 3" by 1.1813". The screen must be installed in the orifice fitting on the compressor end of the motor and soft- soldered in place. See Figure 10. A 3/8" diameter tubing cap should then be soldered on top of the tube assembly with soft solder. After soldering, the orifice must be checked to see that it is not plugged with solder. When reassembling the unit, the fitting with the strainer must be installed on the compressor end. A strainer is not required for the terminal end of the motor.

The tube assembly can also be ordered from Trane. See Table 3 for proper parts identification.

Figure 10 - Tube Assembly

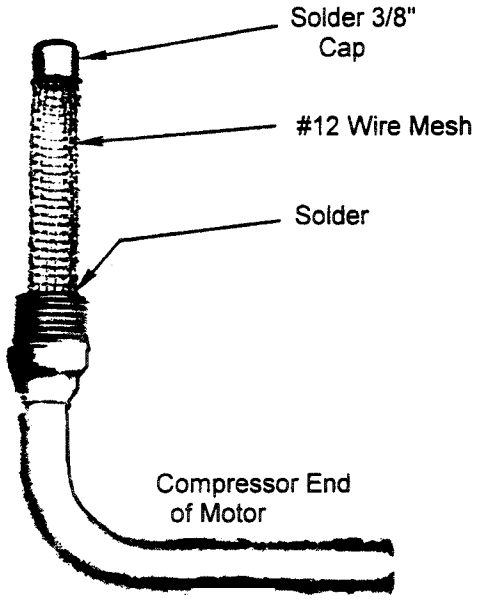

Table 3 - Orifice and Screen Parts

Unit Size	Trane Part Number Tube Assembly with Strainer
PCV2C-PCV2F CVHA 025	TUB0925
PCV2H-PCV3A PCV4D-PCV4K PCV5F-PCV5B CVHA032 and CVHA044 CVHA055	TUB0924
PCV3F-PCV3J CVHA-038	TUB0923

Appendix D
Ejector System Installation

The ejector system can be used to reclaim oil from the evaporator refrigerant circuit on a periodic or permanent basis.

Figure 11 illustrates an oil ejector system installed on a PCV/CVHA style unit. Prior to installation, the following items should be taken into serious consideration:

- The ejector must be installed slightly above the highest possible refrigerant level in the evaporator in order to prevent refrigerant flowing directly into the oil tank when the unit is not operating.
- Since the ejector is most efficient when the unit condensing pressure is highest, it is possible to over dilute the oil sump with refrigerant during machine operation. Therefore, it is advisable to install a solenoid valve and a thermostat to control the amount of refrigerant flow. A normally closed solenoid valve should be installed in the hot gas line to the ejector, and wired in series with a temperature control. On a fall in oil tank temperature (below 120°F), the thermostat should open its contacts and deactivate the solenoid. The thermostat sensor would be installed in the oil sump. An oil tank temperature of a least 120° F must be maintained continuously. An excessive amount of refrigerant flow to the oil tank will cause excessive dilution of the oil and possible bearing damage due to marginal lubrication. A sight glass should be installed in the supply line to the oil tank to visually confirm the amount of refrigerant flow.

Note: There is no provision for a thermostat sensor in the oil sump. When installing a sensor well, be sure it is below the oil level in the sump. The back of the oil tank can be drilled and tapped to accept a well.

- Oil tank-venting on early Model PCV-2C through PCV-5F units using RCS style Louis Allis and General Electric motors, typically had an oil sump operating pressure which was well above evaporator pressure. The original vent line from the oil tank to the first stage evaporator suction area does not keep the oil sump pressure close enough to the evaporator pressure to allow the ejector to function properly. These units can be easily identified since they have a vent line which supplies rotor cooling gas from the economizer into the terminal housing end bell. See Figure 12.

  This problem can be eliminated by installing an additional vent line from the back of the oil tank to the evaporator. The back of the oil tank can be drilled and tapped to accommodate the added vent line. This vent line is in addition to the original vent and should be of the same size (5/8" OD copper). Refer to Figure 12 for a schematic of a RCS style motor lubrication system. All other style centrifugal chillers should not require additional modifications to their original vent piping.

Appendix D
Ejector System Installation

Figure 11 - Typical Oil Recovery System

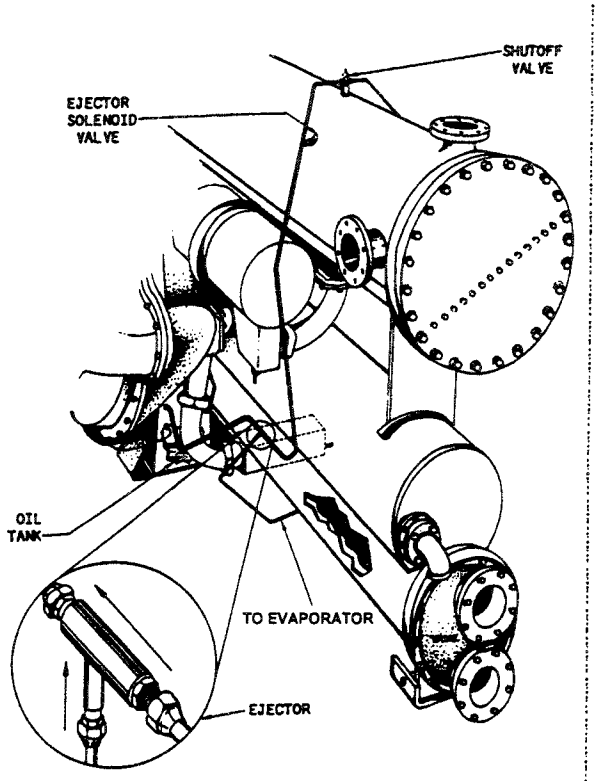

Figure 12 - Schematic of Lubrication System (RCS Style Motors)

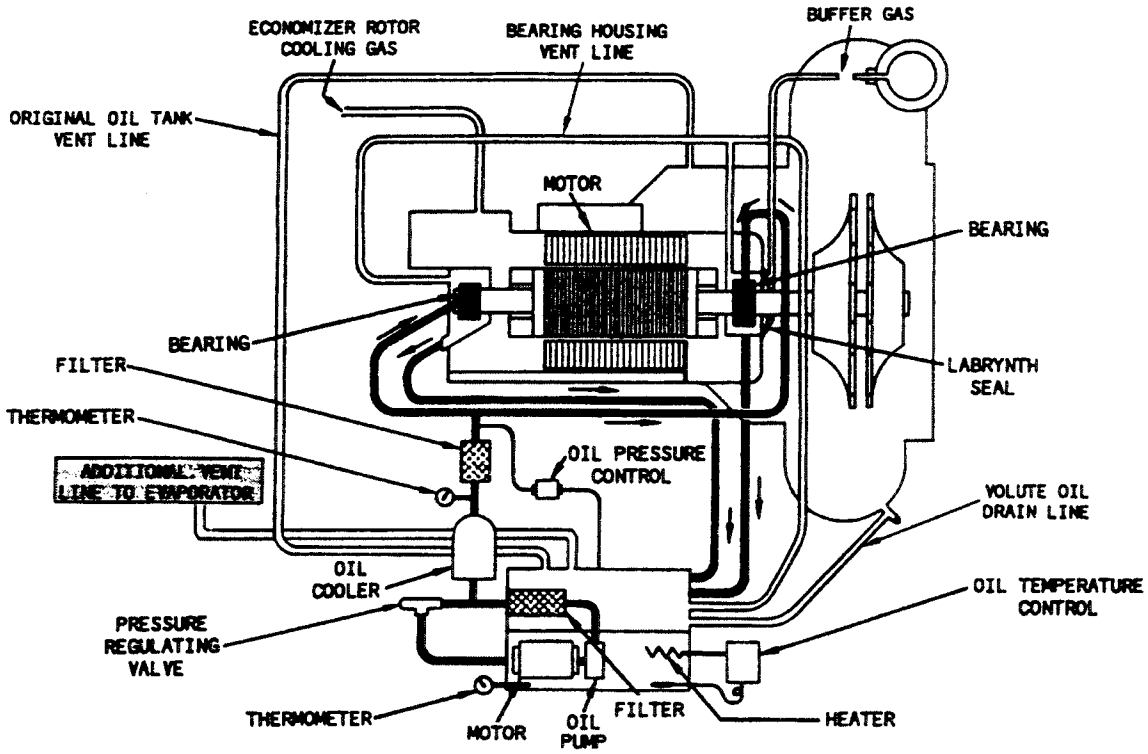

Appendix D
Ejector System Installation

Install the ejector using the following piping guidelines to insure proper operation:

1. The line feeding the ejector with hot gas from the condenser should be 3/8" OD copper. This line should be located near the top of the condenser bundle to prevent condensed liquid from entering the line during unit operation. A tee can be installed between the condenser purge connection and the solenoid valve for this purpose. However, it is recommended that a separate connection be added to the condenser.
2. The suction line from the evaporator should be taken from an area near the top of the refrigerant level, preferably near the compressor suction connection. In most cases, a tee can be used to connect the line to the extra bulb well connection originally supplied on the evaporator. The suction line to the ejector should be 1/4" OD copper with an in-line shutoff valve to regulate flow through the ejector.
3. The ejector supply line to the oil tank should be 1/2" OD copper. This line should be brought into the oil tank above the oil level. A hole can be tapped into the face or back of the oil tank for this purpose. The line into the oil tank should be pointed in the proper direction to prevent the oil and refrigerant mixture being sprayed into the oil tank from being pulled into the line which vents the oil tank to the evaporator. This line should be as short as possible to minimize pressure drop. A sight glass should be installed in this line.

Parts Ordering Information

Table 4 lists the parts required for adding an oil ejector system. All other required materials should be purchased locally.

Table 4 - Oil Ejector System Parts

Description	Part Number
Ejector	TEE0077
Hot Gas Line Solenoid Valve	VAL0081
Thermostat Well	WEL0014
Thermostat	SWT0380

Appendix E
Oil Filter Modification

To minimize oil loss and refrigerant vapor release it is recommended that the oil filter system be modified to utilize a screw-on filter in the horizontal position. In addition to the horizontal oil filter, a refrigeration valve is installed on the top of the assembly. This refrigeration valve will be used for oil sampling.

Refer to Figures 13 and 14 for illustration of the following parts:

- A. (1) 3/8 inch ball valve, Apollo number 70-802-3/8 or VAL 4260
- B. (1) 1/2 inch 3 way valve, Apollo number 70-903-1/2 or VAL 4261
- C. (1) 3/8 inch NPT refrigeration angle valve or VAL 0031
- D. (1) Tee
- E. Modified oil filter top assembly

The existing oil filter top assembly can be field modified, refer to Figure 14 or order new oil filter top (COV 2131).

- F. Oil Filter Bracket (BRK 1804)

Note: If valves with handles are used, remove handles to prevent tampering after installation is complete.

Appendix E
Oil Filter Modification

Figure 13 - Recommended Modifications

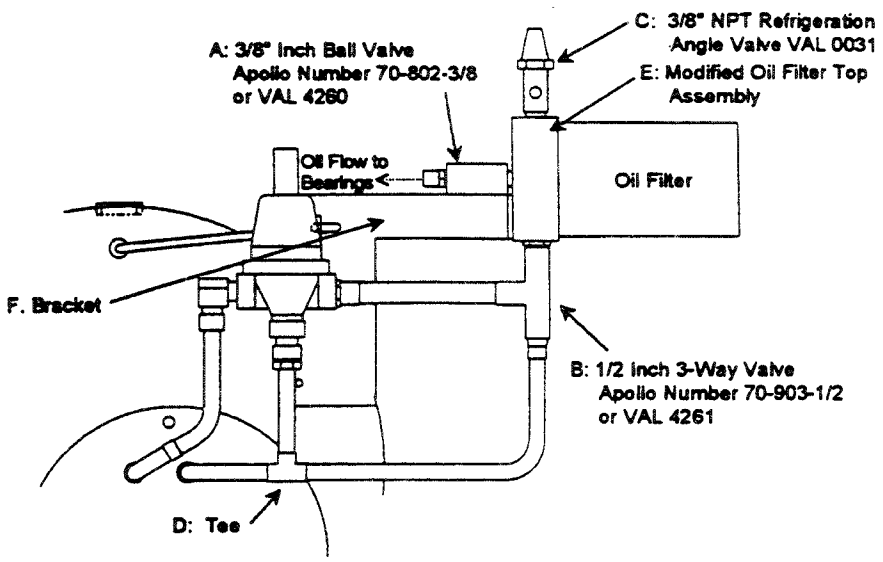

Figure 14 - Oil Filter Top Assembly Modification

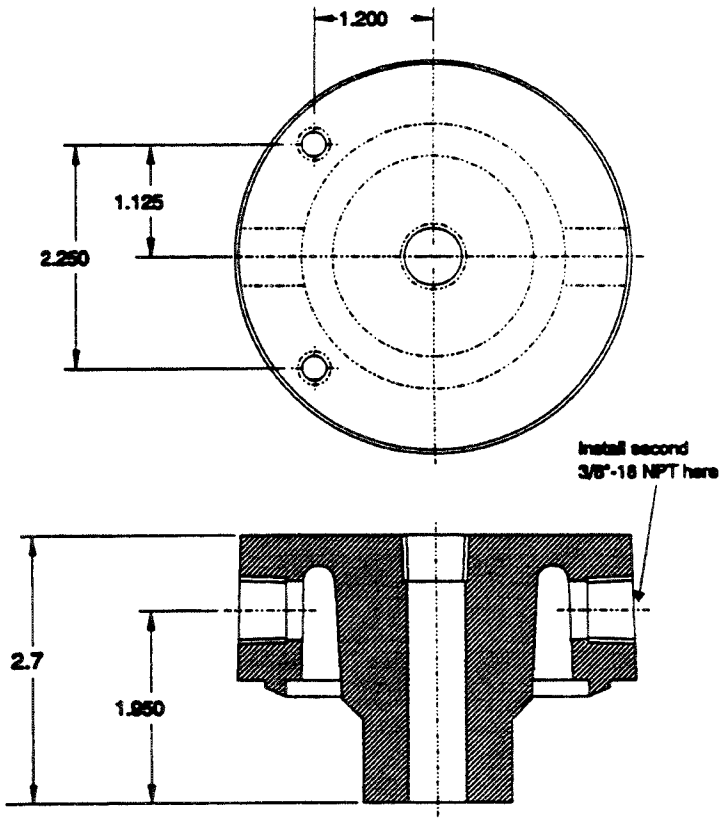

Appendix E
Oil Filter Modification

Oil Sampling Technique With Modification:

To ensure an accurate and useful oil analysis, follow these guidelines.

It is strongly recommended that only approved sample bottles be used for oil analysis. The oil sample bottle used must be clean, dry, and free of any contamination.

A minimum of 4 fluid ounces of oil is required for analysis.

Make sure the centrifugal unit has been operating for 30 minutes or more. This will ensure the oil is well circulated.

With centrifugal unit operating, collect oil circulated to the bearing through the lubrication system. The recommended sample location is the 3/8" refrigeration angle valve (Valve C) on the oil filter top assembly. See Figure 13.

Do not collect oil samples from the charging valve on the oil tank.

Send oil samples in for analysis as soon as possible. Do not store oil samples; since moisture may infiltrate the sample container and distort analysis results.

Oil Filter Change With Modification:

These instructions are for changing a screw-on type oil filter in the horizontal configuration. Other filter arrangements will require different methods for change out. Whatever method is used, it is very important to minimize the loss of oil and the release of refrigerant vapor.

1. Turn compressor and oil pump motor off .
2. Turn three-way valve handle (Valve B) to a 45 degree position from the normal operating position.

Note: During normal operation the handle of 3-Way valve should be in the horizontal position, or in a position to allow oil flow from the oil regulator into the oil filter.

3. Close 3/8" ball valve (Valve A).

Note: With the three-way valve handle set to a 45 degree position and the 3/8" ball valve closed, the oil filter will drain into the sump. Allow the oil filter to drain for a minimum of 30 minutes.

4. Open the 3/8" refrigeration angle valve (Valve C). Quickly rotate the three-way valve handle (Valve B) to a 90 degree position from the normal operating position. This isolates the oil filter and diverts oil flow from the oil regulator back to the oil sump.
5. Close 3/8" refrigeration angle valve (Valve C).
6. Remove and replace oil filter.

Note: Dispose of used oil filter per applicable federal, state and local regulations.

7. Open 3/8" ball valve (Valve A) and return three-way valve handle (Valve B) to 0 degrees (handle in the horizontal position or in a position to allow oil flow from oil regulator into oil filter).
8. Restart centrifugal unit.

Appendix F
Oil Flow Measurement

Table 5 lists the minimum and maximum oil flow limits for Louis Allis motors. The procedure for measuring oil flow through compressor motor bearings is as follows:

1. Drain the oil sump and refill with new compressor oil. The only oil recommended for use in all Trane CenTraVac® chillers (excluding models CVHC and LOCV) is Trane OIL0022. The flow rates shown in Table 5 are for new compressor oil. Dilution of the compressor oil with refrigerant can significantly lower the viscosity of the oil which could affect flow readings.
2. Energize the crankcase heater and bring the oil to 135° F.
3. Energize the unit and operate the motor in the proper rotation.
4. Set the oil pressure regulator to maintain proper oil pressure.
5. Collect an oil sample from each motor bearing for a one minute period and compare the amount to Table 5.

⚠ Caution:
Do not run a motor without cooling for more than five minutes or damage to the motor will result.

Once the motor has been operated, it should not be re-started for 24 hours.

Table 5 - Oil Flow Limits for Louis Allis motors

Type and Frame	Min. Flow	Max. Flow
LCF & LCC All Frame	.5 pints/min.	2 pints/min.
RCS 1500 - 1700 - 1900 Term. End.	.6 pints/min.	1.8 pints/min.
RCS 1500 - 1700 Comp. End.	1.2 pints/min.	3.3 pints/min.
RCS 1900 (back) Comp. End.	1.5 pints/min.	3.6 pints/min.
RCC 1900 - 2200	.5 pints/min.	2.4 pints/min.
RCC 2600	1.5 pints/min.	3 pints/min.
ABX 2602-3388	1.5 pints/min.	3 pints/min.
RVS-RPS 1300 Term. (Frt.)	1.5 pints/min.	3 pints/min.
RVS-RPS 1300 Comp. (Bk.)	.6 pints/min.	1.8 pints/min.
RVS-RPS 1500 & 1700 Term. (Frt.)	.6 pints/min.	1.8 pints/min.
RVS-RPS 1500 & 1700 Comp. (Bk.)	1.5 pints/min.	3.5 pints/min.
RVX All Frames	1.5 pints/min.	3.5 pints/min.
DRV Term. (Thrust)	.5 gallons/min.	.8 gallons/min.
DRV Drive (Compressor)	1.3 gallons/min.	1.7 gallons/min.

Appendix G
Loctite Gasket Eliminator 515

Loctite Gasket Eliminator 515 is a relatively fluid substance that will not harden in the presence of air. It will set up to form an effective seal between the O-ring and the casting surface in the absence of air after the casting has been properly torqued. Loctite should not be applied to any O-ring mating surfaces where excessive amounts of it can seep out and fill a groove, making removal of additional components difficult. An example of this is the suction elbow to suction cover O-ring on CVHE units. The Loctite will flow when the mating surfaces are tightened and fill the groove between the inlet vanes and the suction housing. When the sealant is allowed to set in the groove, removal of the inlet vane housing becomes difficult.

When using Loctite on O-rings. a 1/8-inch diameter bead should be placed in the bottom of the O-ring groove around the entire circumference. Place the O-ring into the groove and gently press it into the sealant. Apply a 1/8-inch bead of sealant to the outer portion of the O-ring where it will fit up against the mating casting surface. The lubricant/sealant will help keep the O-ring in place during assembly of the mating casting.

In any application using Loctite 515 as a sealant, back-off holes should be present for future disassembly. If back-off holes are not present use the following procedure to tap the casings. The procedure is for CVHE units, but can be modified for all other units.

Note: Model CVHE CenTraVacs® built prior to November 1983 do not have jack bolt holes. Some of these chillers were assembled with Loctite and will need jack bolt holes. Casings should not be forced apart without the use of jack bolt holes. Uneven force could cause the casings to crack.

1. Remove three of the 5/8-11 bolts that hold the casings together (120 degrees apart). The bolt clearance hole openings are 3/4-inch diameter.
2. Refer to Table 6 and select the proper tap for the 3/4-inch bolt hole opening. For this example, use a 7/8-9 tap.

Table 6 - Tap Sizes

Bolt Hole Opening	Size	Threads per inch
5/16	3/8	16
27/64	1/2	13
17/32	5/8	11
3/4	7/8	9

Appendix G
Loctite Gasket Eliminator 515

3. Tap the hole with a 7/8-9 tapered tap, which will allow several threads to be started easily. The remaining tapping should be done by using a 7/8-9 bottoming tap. This will allow the maximum number of threads to be formed without damaging the 5/8-11 threads in the adjoining piece.

Note: When tapping, a cutting oil should be used to minimize the possibility of tap breakage or thread damage.

4. To separate the casings, insert the 5/8-11 bolt as shown in Figure 15. Insert a 1/2-inch steel ball and the 7/8-9 bolt. By removing the remaining 5/8-11 bolts and inserting the rigging and guide pins as necessary, the 5/8-11 bolts can be tightened until they exert force on the steel ball and the 7/8-9 bolts. This force, when uniform at all three points, will separate the casings.

5. With proper rigging, the casing can be removed safely.

When Loctite 515 has been used, field clean-up of the casings can be difficult. Loctite offers a gasket removing compound called "CHISEL", which is available in aerosol cans. When using the "CHISEL" manufacturer's safety recommendations should be followed completely.

The use of Loctite 515 on flat gaskets is not recommended.

Figure 15 - Bolt Connection Modified for Back Off Hole

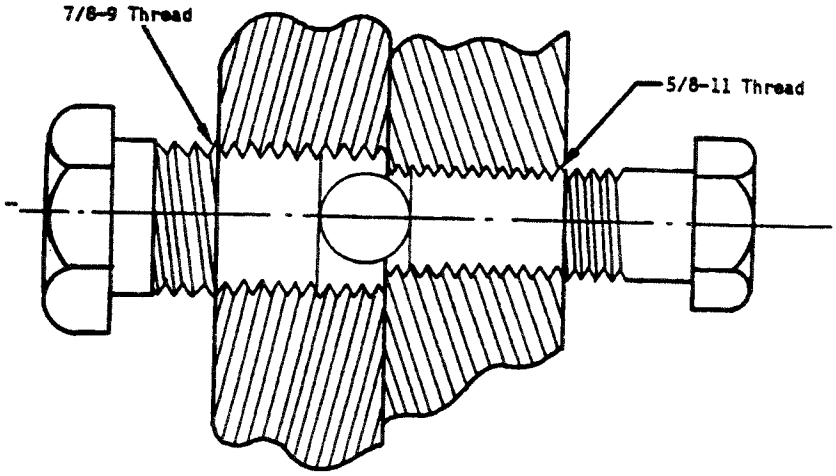

Appendix H
Trim Balancing CVHE

Whenever vibration analysis on a CVHE indicates an excessive amount of vibration, the compressor's entire rotating assembly must be balanced. Trim balancing a unit in the field requires a substantial investment in expensive vibration analysis equipment. The portable vibration analyzers typically used for fan balancing are usually unsuitable for balancing a CVHE compressor; they are not designed to provide the shaft orbit measurements that are critical for proper compressor balancing.

Trane service personnel use a Bentley Nevada Model DVF2 or equivalent (plus supporting equipment) to trim balance CVHEs since it provides the sensitivity and features necessary for proper trim balancing. To trim balance the compressor, phase angle and the orbit of the compressor rotor shaft are tracked by non contact "proximity" probes during initial and trial weight runs. (Because the probes must monitor a smooth surface, the standard shaft nut is replaced with a special trim balance nut.) Data recorded during these runs is then fed into a single-plane balance program that determines the amount of weight required at specific locations to balance the assembly.

Appendix I
CVHE Oil Sump Vent Line Piping Modifications

Increase the vent line (Figure 16) size to 1-1/8" if required. The vent line size is 7/8" on units manufactured prior to October 1990. Cut off the 7/8" line as close as possible to the oil tank and use a 1-1/8" x7/8" reducing coupling. At the suction cover, cut the line and remove the screw-in fitting. Replace it with a 90-degree elbow (Mueller No. W2164) or straight adaptor (Mueller No. W1 164), whichever is appropriate for the job. Both are 1-1/8" solder vs. 3/4" NPT. The bent tube in the old suction cover fitting is not required.

Next, install a new ALCO vent-line solenoid valve (Trane Part No. VAL3217) at the location shown in Figure 16.

Finally, install a second eductor (Trane Part No. TEE0077) on the 1/4" valve on the evaporator. Tee a 3/8" line from the condenser supply to the eductor, 1/4" line to the evaporator and 3/8" line to the oil tank.

Parts Information

The parts listed below are required to complete the piping modifications.

Obtain the parts listed below locally:

- 1-1/8 Copper Tubing (field supplied)
- (1) 90-Degree Elbow (Mueller No. W2164)
- (1) Straight Adaptor (Mueller No. W1164).

Trane parts:

- VAL3217 - ALCO Vent-Line Solenoid Valve
- TEE0077 - Oil Eductor

Figure 16 - CVHE Vent Line and Vent-Line Solenoid Valve Location

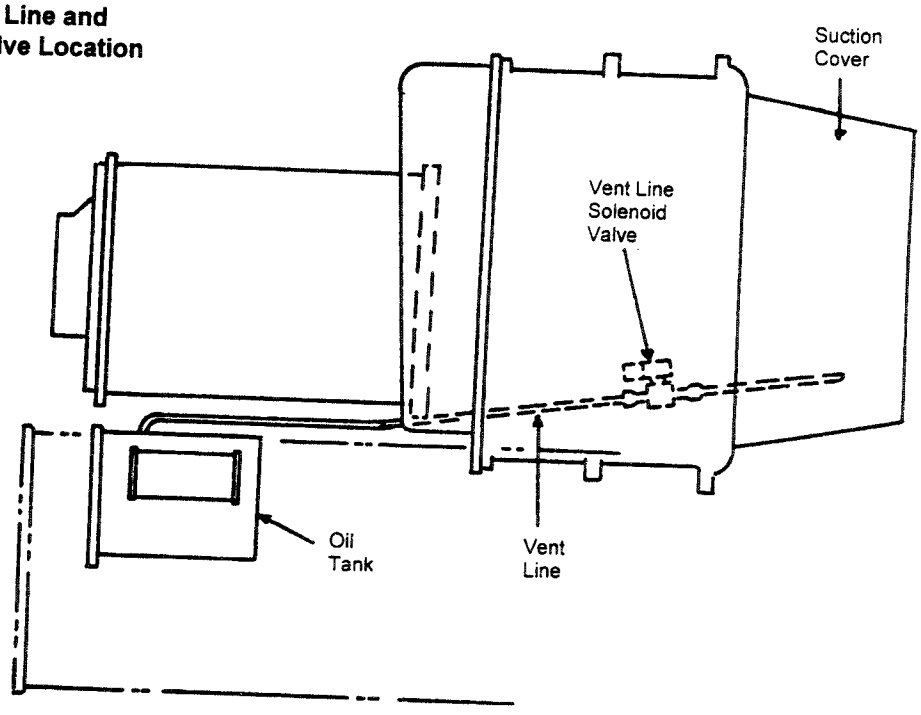

Appendix J
CV, CVHB Oil Sump Vent Line Piping Modifications

The oil sump vent line should be moved to the evaporator side of the compressor first stage inlet vanes. In other words, the vent is to be connected at the suction elbow. The new location of the oil sump vent line will retard the speed of oil sump pressure reduction, since it will be at the same pressure as the evaporator.

This will effectively stop oil pressure loss and oil migration. In the event that some oil is carried from the sump, return of this oil to the sump is assured by the addition of a 1/4" O.D. drain line between the bottom of the first stage suction cover throat and the oil sump. This line will drain any accumulated oil back to the oil sump during the compressor shutdown period. Figure 17 is a schematic representation of the system and the modifications to be made.

Procedure:

1. Weld a 1/2" pipe coupling to the inner heel of the suction elbow, approximately mid-point elevation wise.
2. After welding, pressure test the welding work by applying nitrogen pressure to the coupling through an appropriate fitting.
3. After pressure testing, drill a 3/8" hole thru the elbow skin.
4. Move the vent line from the suction cover to the new location and plug the original opening.
5. Drill and tap a 1/8" NPT hole at the very bottom of the suction cover and at a high point of the oil sump backface.
6. Install a 1/8" NPT to 1/4" flare adapter at these points.
7. Connect a 1/4" O.D. copper line with appropriate fittings between these points.

All required material should be purchased locally.

Figure 17 - Oil Sump Vent Line

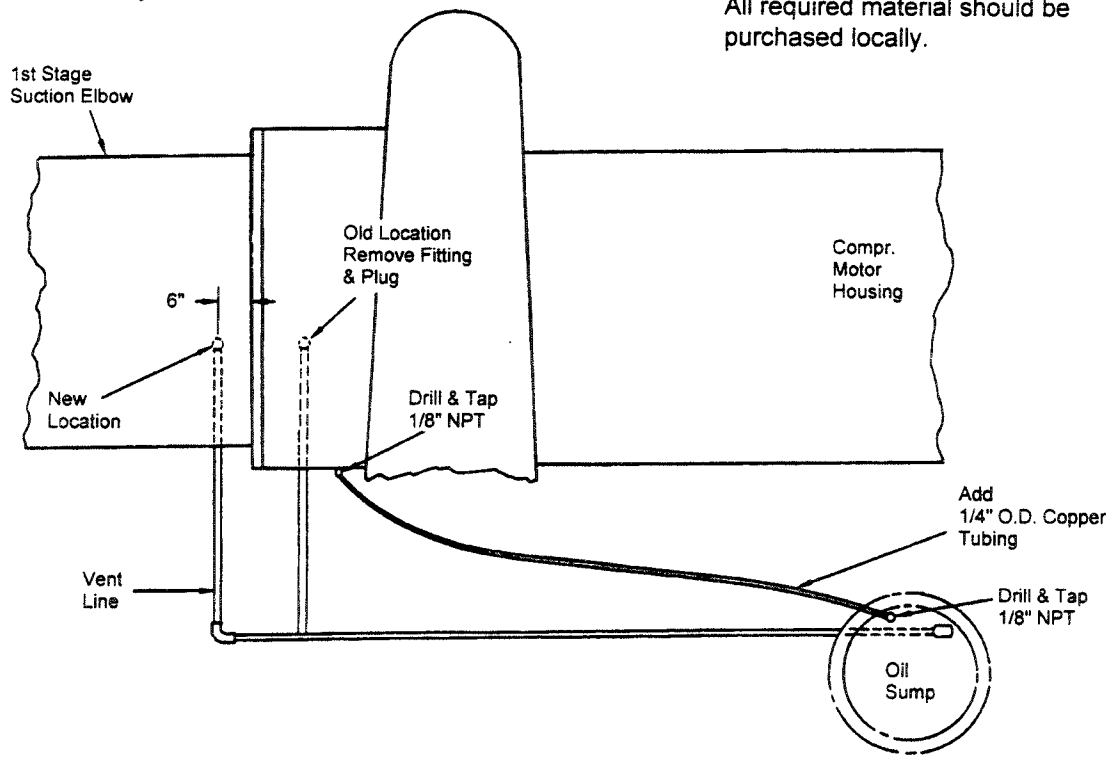

Appendix K
Refrigerant Charges

Points to consider when determining the charge level of a CenTraVac® unit:

1. The refrigerant charge for a standard (non-heat recovery or free-cooling) machine is always based on evaporator size.
2. A typical heat recovery CenTraVac with a split bundle condenser uses 50 pounds more refrigerant than a standard evaporator/condenser version of the same machine.
3. CVHA and CVHB machines with auxiliary heating condensers use a standard evaporator charge.
4. CVHE CenTraVacs with auxiliary condensers use 50 pounds additional refrigerant.
5. Early model machines have a number and/or letter combination that identifies the compressor, evaporator and condenser, in that order.
6. Standard combinations of CVHA and CVHB compressors, evaporators and condensers are listed in the tables of this bulletin.
7. The evaporator size of "pre-PDS" CenTraVacs are identified in the unit model number. Refer to appropriate table in this appendix.

Exception: PCV and CV-style machines that shipped after November 1, 1971, require a smaller refrigerant charge. Changes were made in the evaporator design that are not reflected in the machine model number. Refer to the original start-up record to determine optimum refrigerant charge.

8. When certain machines are converted to motors that have a liquid refrigerant-cooled rotor, the refrigerant charge must be increased.
9. As of January 1, 1990, for CVHE units and May 14, 1991, for CVHB units, the evaporator shell size (CVSZ) and evaporator tube bundle sizes (EVBS) are identified in the Product Description Block of the unit nameplate. Unit refrigerant charge information is also included on the unit nameplate.

The following tables list HCFC-123 refrigerant charge recommendations for typical chillers, including current production models. Variations are also listed where applicable.

Appendix K
Refrigerant Charges

Table 7 - Model CTV

Machine Size	Refrigerant Charge (Pounds)
200L	1600
250L	2200
300L	2200

Table 8 - Model CTV (Standard Units)

Machine Size	Refrigerant Charge (Pounds)
F-25-26	1100
F-31-32	1300
F-41-42	1600
F-43-42	1600
G-41-42	1500
G-52-52	2200
H-51-42	1900
H-51-52	1900
H-53-54	1900
J-53-54	1900
J-61-62	2300
J-63-64	2200
J-65-64	2300
K-63-64	2200
K-71-72	3000
L-63-64	2400
L-71-72	2500
L-73-72	2500
L-73-74	2500
L-75-64	2600
L-75-72	2600
N-73-74	2500
N-83-84	3800
N-85-86	3800
R-83-84	3800
R-85-86	3800
Y-23-24	1100
Y-25-26	1100
Y-31-32	1400
2J-83-84	4000
2K-85-86	4000
2L-85-86	4000
2L-93-94	5400

Table 9 - Model CTV Evaporator Cross Reference

Evaporator Size	Refrigerant Charge (Pounds)
BD	325
FB	429
DD	500
ED	900
EF	900
FD	1000
FF	1000
GD	1000
GF	1000
HD	1000
HF	950
KD	1200
KF	1150
MD	1450
MF	1400
PD	1650
PF	1600
RD	2200
RF	2150
MJ	2200
PJ	2250
RJ	2800
RK	2750
RL	2700
TD	2450
TF	2300
TJ	2200

Table 10 - Model CV

Unit Model	Refrigerant Charge (Lbs.)	
	Shipped Prior to 11/1/71	Shipped After 11/1/71 with RVX or RCC motors
CV6A-6C-6A	1300	1250
6J-7G	1300	1250
8C-9A	1850	1800
9F-10F	2150	2100
10H-12F	2300	2200

Appendix K
Refrigerant Charges

Table 11 - Turbine Drive CenTraVac®

Machine Size	Refrigerant Charge (Pounds)
TB-31-32	1300
TB-43-42	1700
TB-51-42	2200
TC-41-42	1600
TC-51-42	2200
TC-51-52	2200
TE-51-52	2200
TE-53-54	2200
TG-65-54	2500
TG-63-64	2400
TJ-63-64	2400
TJ-75-64	3400
TJ-75-72	3400
TL-75-64	3400
TL-75-72	3400
TL-71-72	3200
TL-73-72	3200
TN-75-64	3400
TN-75-72	3400
TN-71-72	3200
TN-73-72	3200
TQ-83-74	4000
TT-85-87	4000
TT-73-94	5400
TW-93-94	5400

Table 12 - Open Drive CenTraVac®

Compressor	Evaporator	Refrigerant Charge (Pounds)
G,H	GD, GF	1000
G,H	HD, HF	1000
G,H	KD,KF	1200
K,L	HD,HF	1000
K,L	KD,KF	1200
K,L	MD,MF	1450
K,L	PD,PF	1650
K,L	RD,RF	2200
N,R	RD,RF	2200
K,L	MJ	2200
N,R	MF	2200
K,L	PJ	2250
N,R	PJ	2250
N,R	PJ	2800
N,R	RK, RL	2800
N,R	TD, TF	2450

Appendix K
Refrigerant Charges

Table 13 - Model OCV

Machine Size	Refrigerant Charge (Pounds)	
	Shipped Before 11/1/71	Shipped After 11/1/71
OCV-3F	745	675
OCV-3G	N/A	675
OCV-3H	N/A	665
OCV-3J	725	665
OCV-4D	945	855
OCV-4K	1265	1125
OCF-5F	1175	1135
OCF-6A-6C	1470	1420
OCV-6J-6H	1470	1420
OCV-7C	N/A	1420
OCV-7G	N/A	1420
OCV-8C	N/A	1700
OCF-9A	1750	1700
OCV-9F	2050	2000
OCV-10F	2050	2000
OCV-10H	2200	2100
OCV-10J	N/A	2100
OCV-12F	2200	2100

Table 14 - Model PCV

Size Unit	Refrigerant Charge (Pounds)			
	Shipped Before November 1, 1971		Shipped After November 1, 1971	
	With RCS Style Motor	With RPS/RVS Style Motor	With RCS Style Motor	With RPS/RVS Style Motor
PCV 2C	610	650	545	585
PCV 2F	600	650	590	640
PCV 2H	645	710	600	665
PCV 3A	630	695	570	635
PCV 3F	800	840	730	770
PCV 3J	780	820	720	760
PCV 4D	890	970	800	880
PCV 4K	1150	1240	1010	1100
PCV 5F	1060	1140	1020	1000

Table 15- Model CVHA, CVHB Refrigerant Charges (Standard Units)

Model	Evaporator	Standard Condenser	Extended Condenser	Refrigerant Charge	Refrigerant Add for Free Cooling
CVHA	E3	E3S	E3L	600	
	E2	E2S	E2L	545	140
	E1	E1S	E1L	640	140
	F2	F2S	F1L	665	175
	F1	F1S	F1L	635	175
	G2	G2S	G2L	770	300
	G1	G1S	G1L	760	300
	H1	H1S	H1L	880	340
	J2	J2S	J2L	1100	500
	J1	J1S	J1L	1100	500
CVHB	K1	K1S	K1L	1250	550
	L1	L1S	L1L	1250	600
	M2	M2S	M2L	1800	800
	M1	M1S	M1L	1800	850
	N1	N1S	N1L	2100	1050
	P1	N1S	P1L	2200	1050
	R1			2400	1100
	S1			2500	1100

Appendix K
Refrigerant Charges

Table 16 - Model CVHA, CVHB
Component Combination Availability (use with Table 15)

Model	Evaporator	Standard Condenser	Extended Condenser
CVHA025	E1,E2,E3	E1S,E2S,E3S	E1L,E2L,E3L
CVHA032	F1,F2	F1S,F2S	F1L,F2L
CVHA038	G1,G2	G1,G2S	G1L,G2L
CVHA044	H1,J1,J2	H1S,J1S,J2S	H1L,J1L,J2L
CVHA055	J,J2	J1S,J2S	J1,J2L
CVHB061	K1,L1,M2	K1S,L1S,M2S	L1L,L1L,M2L
CVHB080	K1,L1,M2	K1S,L1S,M2S	L1L,L1L,M2L
CVHB095	M1,N1,P1	M1S,N1S,P1S	M1L,N1L,P1L
CVHB125	M1,N1,P1	M1S,N1S,P1S	M1L,N1L,P1L

Table 17 - Heat Recovery Units

Heat Recovery	Evaporator Designator	Condenser Designator	Refrigerant Charge
CVHA-025	E1	E1H/E1H	690
CVHA-030	F5	F2H/F2H	715
CVHA-032	F1	F1H/F1H	685
CVHA-038	G2	G2H/G2H	820
CVHA-039	G1	G1H/G1H	810
CVHA-044	H1	H1H/H1H	930
CVHA-054	J2	J2H/J2H	1150
CVHA-055	J1	J1H/J1H	1100
CVHB-061	K1	K1H/K1H	1300
CVHB-061	M2	M2S/M2S	1800
CVHB-080	L1	L1H/L1H	1300
CVHB-080	M2	M2L/M2L	1800
CVHB-095	N1	N1S\N1S	2100
CVHB-125	P1	P1S\P1S	2200
CVHB-155	S1	S1L\S1L	2500

Table 18 - Model CVHB
Using PDS Component Designators

Shell Size	BNDL Size	SNGL L EV	HTRC L EV	AUX L EV	FRCL L EV
155L	1250	2200	2500	2250	3250
155E	1400	2500	2800	2550	3500
155E	1550	2500	2800	2550	3550

BNDL = Tube Bundle Size
E = Extended Shell
EV = Evaporator Shell
FRCL = Free Cooling
HTRC = Heat Recovery
L = Long Shell
S = Short Shell
SNGL = Single

Appendix K
Refrigerant Charges

Table 19- Model CVHE, CVHF Using PDS Component Designators

EVSZ	EVBS	SNGL	HTRC	AUX	FRCL
032S	200	370	470	420	655
	230	390	490	440	675
	250	400	500	450	685
	280	420	520	470	700
	320	440	540	490	725
	350	460	560	500	745
032L	200	480	580	530	525
	230	500	600	550	525
	250	520	620	570	590
	280	550	650	600	640
	320	580	680	630	865
	350	600	700	650	885
050S	320	590	740	640	1100
	360	620	770	670	1160
	400	640	790	690	1180
	450	680	830	730	1200
	500	720	870	770	1260
	550	750	900	800	1290
050L	320	770	900	800	1300
	360	800	950	850	1340
	400	840	990	890	1380
	450	890	1040	940	1400
	500	940	1090	990	1480
	550	990	1140	1040	1500

Table 19 - Model CVHE, CVHF Using PDS Component Designators, continued

EVSZ	EVBS	SNGL	HTRC	AUX	FRCL
080S	500	890	1090	940	1550
	560	930	1100	980	1590
	630	980	1180	1030	1600
	710	1040	1240	1090	1700
	800	1090	1290	1140	1700
	890	1150	1350	1290	1800
080L	500	1160	1360	1200	1800
	560	1200	1400	1250	1860
	630	1270	1470	1300	1900
	710	1350	1550	1400	2000
	800	1400	1660	1450	2000
	890	1500	1700	1550	2100
125L	800	1570	1800	1600	2585
	900	1600	1800	1650	2600
	1000	1700	1900	1700	2700
	1120	1790	2000	1800	2800
	1250	1890	2100	1900	2885
	1400	1970	2200	2000	2900
140E	1250	2090	2300	2100	3100
	1450	2200	2400	2200	3200
142M	890	1470	1700	1500	2485
	980	1500	1790	1550	2500
	1080	1600	1800	1650	2600
	1220	1680	1900	1700	2695
	1420	1800	2000	1800	2800
142L	890	1600	1800	1650	2600
	980	1700	1900	1700	2700
	1080	1790	2000	1800	2800
	1220	1870	2100	1900	2885
	1420	2000	2200	2000	3000
210M	1610	1880	2180	1900	2895
	1760	1990	2290	2000	3000
	1900	2090	2390	2100	3100
	2100	2100	2400	2100	3100
210L	1610	2090	2390	2100	3100
	1760	2200	2500	2200	3200
	1900	2300	2600	2300	3300
	2100	2400	2700	2400	3400

CenTraVac
OIL/REFRIGERANT PUMP

Design Benefits

- Cool compressor motor under all head conditions. Permit chiller operation at low head.
- Improve chiller KW/ton efficiency by 1%.
- Eliminate motor terminal sweating and need for terminal box heater option.
- Reduce oil foaming during startup that causes oil loss, marginal bearing lubrication and nuisance shutdowns.
- Eliminate the unreliable vent line solenoid valve.
- Simplify and reduce the cost of the oil cooler.
- Reduce the complexity copper piping.

Parts Information

CHM00172 - Chemical, corrosion inhibitor, quart container, may be ordered through Trane Parts Center per the Pride System.

Production Changes

No production changes required per this bulletin.

Units Affected

CVHE, CVHF and CDHF units that are in service which have AFDB, AFDC and AFDD drives installed.

Literature Order Number	AFDB-SVB02A-EN
File Number	SV-RF-CTV-AFDB-SVB02A-EN-0701
Supersedes	New
Stocking Location	Inland

Since The Trane Company has a policy of continuous product and product data improvement, it reserves the right to change design and specifications without notice. Only qualified technicians should perform the installation and servicing of equipment referred to in this publication.

2000 Service Committee

CenTraVac
OIL/REFRIGERANT PUMP

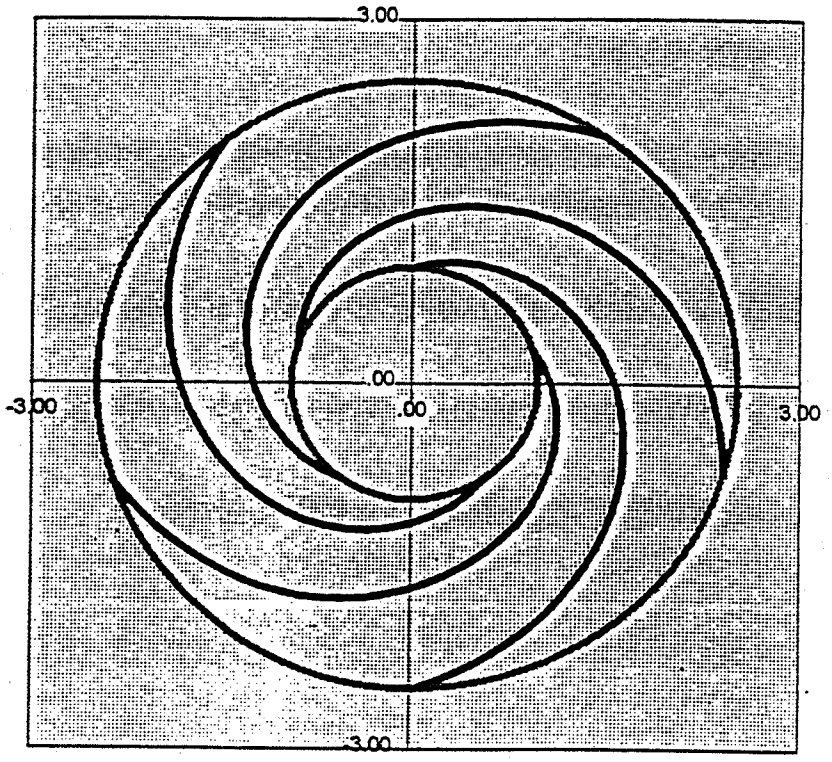

Oil Tank Assembly

Refer to oil tank cross section view enclosed. This design consists of an oil pump and a refrigerant pump; each mounted on the outboard ends of a common motor shaft.

The oil pump is an internal/external gear type pump, referred to as a Gerotor. The internal pumping element is mounted directly on the motor shaft by a key. The external element rotates in the housing that also supports the rear motor bearing. The pump has inlet and outlet ports that are cast into the port plate housing. The inlet opening draws oil from the bottom of the sump and the outlet opening is piped to the inside of the tank cover. The 3 GPM pump delivers 2 GPM to the bearings.

The refrigerant pump is a centrifugal type having an impeller and volute. This pump type was chosen since it can have low inlet losses in order to pump a saturated fluid without cavitating. The pump also has no contacting moving parts, which assures reliability while running in liquid refrigerant. A key drives the impeller similar to the oil pump. A small diameter shaft seal separates impeller refrigerant from oil in the tank. The pump adds about 12 psi or 20 ft above the condenser pressure.

The motor is similar to the motor currently used in today's oil tank, except it has a longer stack length to provide ¾ hp for both pumps. The motor stator is mounted in a steel shell and the rotor is supplied with the finished shaft. The motor assembly is mounted to the oil tank cover using (6) long capscrews that are outside of the stator shell.

The rotor is supported by two size 6204 ball bearings, which is one the most common, low cost bearings in production.

Power to run the motor is brought through the tank cover through a bolted and gasketed Fusite connector.

The tank heater, temperature measuring probe, oil filter block, oil reclaim dirt filter are current production parts.

Tank Installation on CenTraVac Chillers

For reference, a schematic is enclosed showing the oil tank location on today's production chiller. This location between the compressor motor and the evaporator results in many mounting variations depending on the selection of evaporator, compressor, and motor frame.

The refrigerant pump must be located low on the chiller. Liquid refrigerant in either the evaporator or condenser is in a saturated state. If the pump inlet is located above or too close to the liquid level, refrigerant will flash as the pump tries to pull the liquid into the pump inlet. If the refrigerant flashes, the pump will not develop pressure or flow.

The condenser was chosen as the liquid source for the pump for the following reasons:

- The liquid level is higher that in the evaporator.
- Higher pressure saturated liquids are easier to pump.
- Condenser liquid offers cycle improvement benefits.

The tank assembly is mounted off the leg of the condenser on the left side of the chiller as viewed from the back, motor end. This location requires less copper pipe and fittings compared to the right side location. There is also less interference with free cooling and other chiller options.

System Piping

The refrigerant pump inlet is connected to the well at the bottom of the condenser. The connection is on the side where a weir assures a preferential supply of liquid to cool the motor. Refrigerant is delivered to the motor through the same connection as used in production with no modifications to the motor. Motor drain lines are routed to the condenser versus the evaporator in today's CVHF with the following advantages:

- The motor barrel is at condenser temperature eliminating sweating of motor terminals at high humidity conditions.
- Chiller efficiency improves since the heat of the motor is rejected to the condenser (cooling tower) rather than the evaporator.
- Refrigerant pump operation is not affected by operating conditions since the source and delivery point pressures are the same.

Oil routing is through the oil pressure regulator and oil filter currently used in production. After the oil filter, oil is routed through a cooler located in the economizer. The cooler consists of a one-piece wound coil. This cooler eliminates today's separate pressure vessel and external mounting/piping. Oil flow to both bearings is cooled and oil supply connections to the compressor and motor are unchanged.

Oil return lines from both bearings also transport refrigerant gas that leaks through the labyrinth seals adjacent to the bearing cavities, see enclosed compressor section view. Since the motor barrel is at condenser pressure, the volume of gas flow is greater than today's system where the motor barrel pressure is slightly above evaporator pressure in the CVHF. Oil return lines are routed into a manifold under the motor. Gas flow exits the top of the manifold and is vented to the evaporator. The tank is vented to the evaporator rather than the suction cover as in today's system. This provides for slower tank pressure reduction during chiller start that makes oil foaming less violent to better control oil loss. The vent line solenoid used today is therefore not required. Oil exits the bottom of the manifold and returns to the tank. Separation of the seal leakage gas in the manifold keeps this gas out of the tank, reducing loss of oil from the tank during chiller startup.

Three-stage, CVHE/G, chillers have a few modifications to ensure proper operation. An orifice is added to the manifold vent line. This increases the oil tank pressure, approx. 2-3 psi at full load, above the evaporator to reduce startup oil foaming and loss. The oil cooler is moved to the lower pressure side of the economizer to adequately cool the oil.

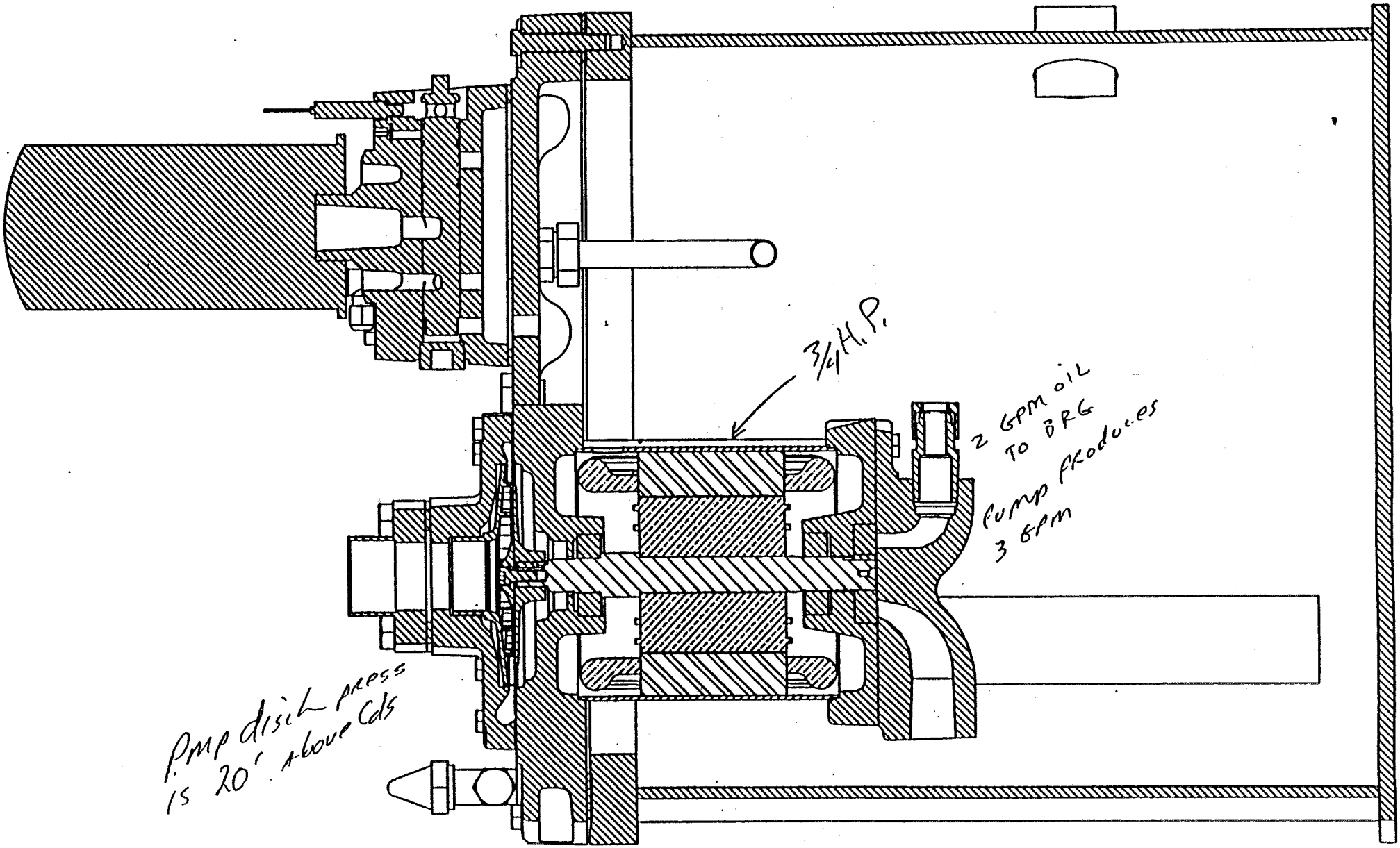
3/4 H.P.
2 GPM oil
TO BRG
Pump produces
3 GPM
Pmp discl press
is 20' above Cds

CVHF PIPING SCHEMATIC

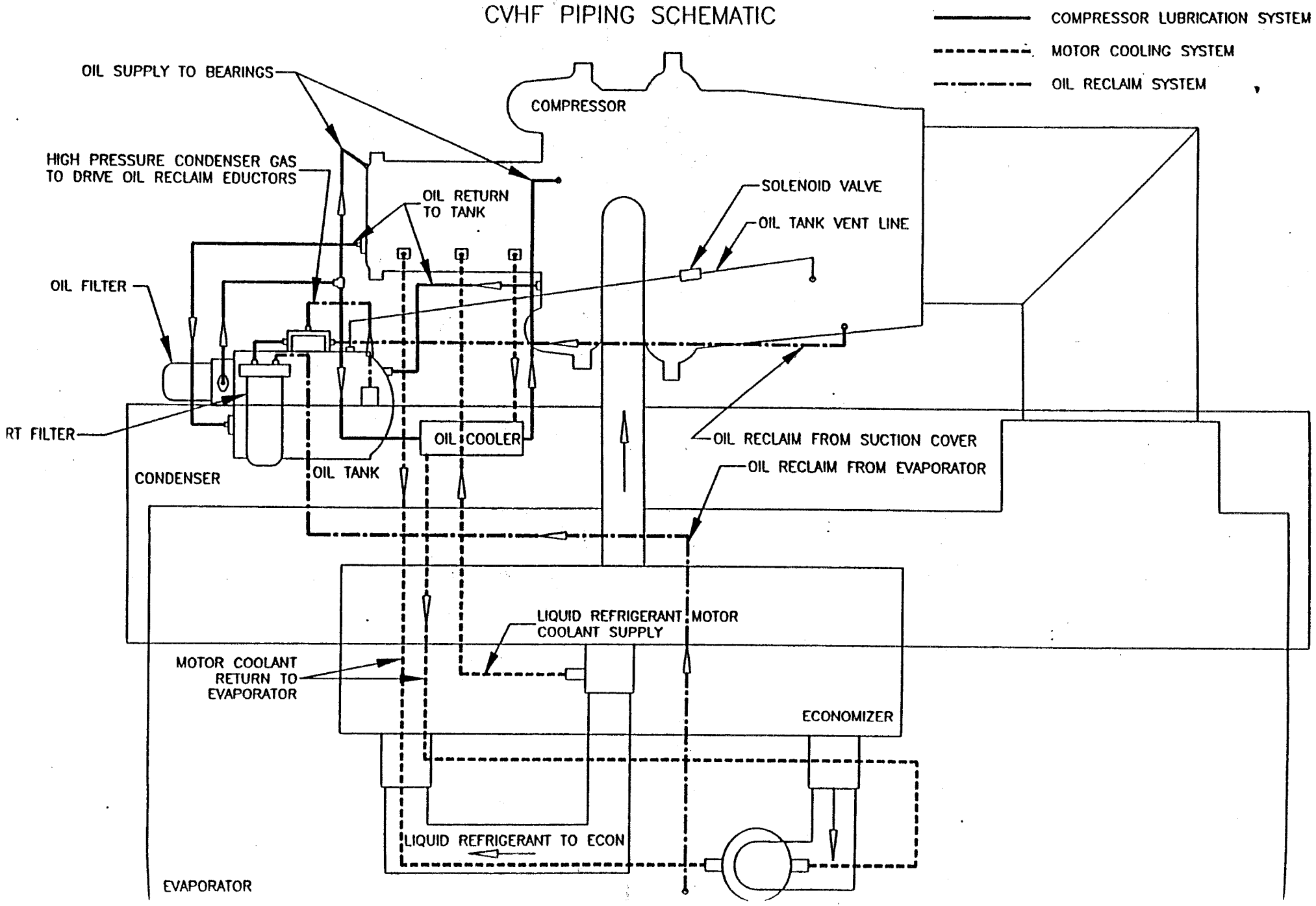

GENERAL ASSEMBLY
OIL/REFRIGERATION SYSTEM SCHEMATIC

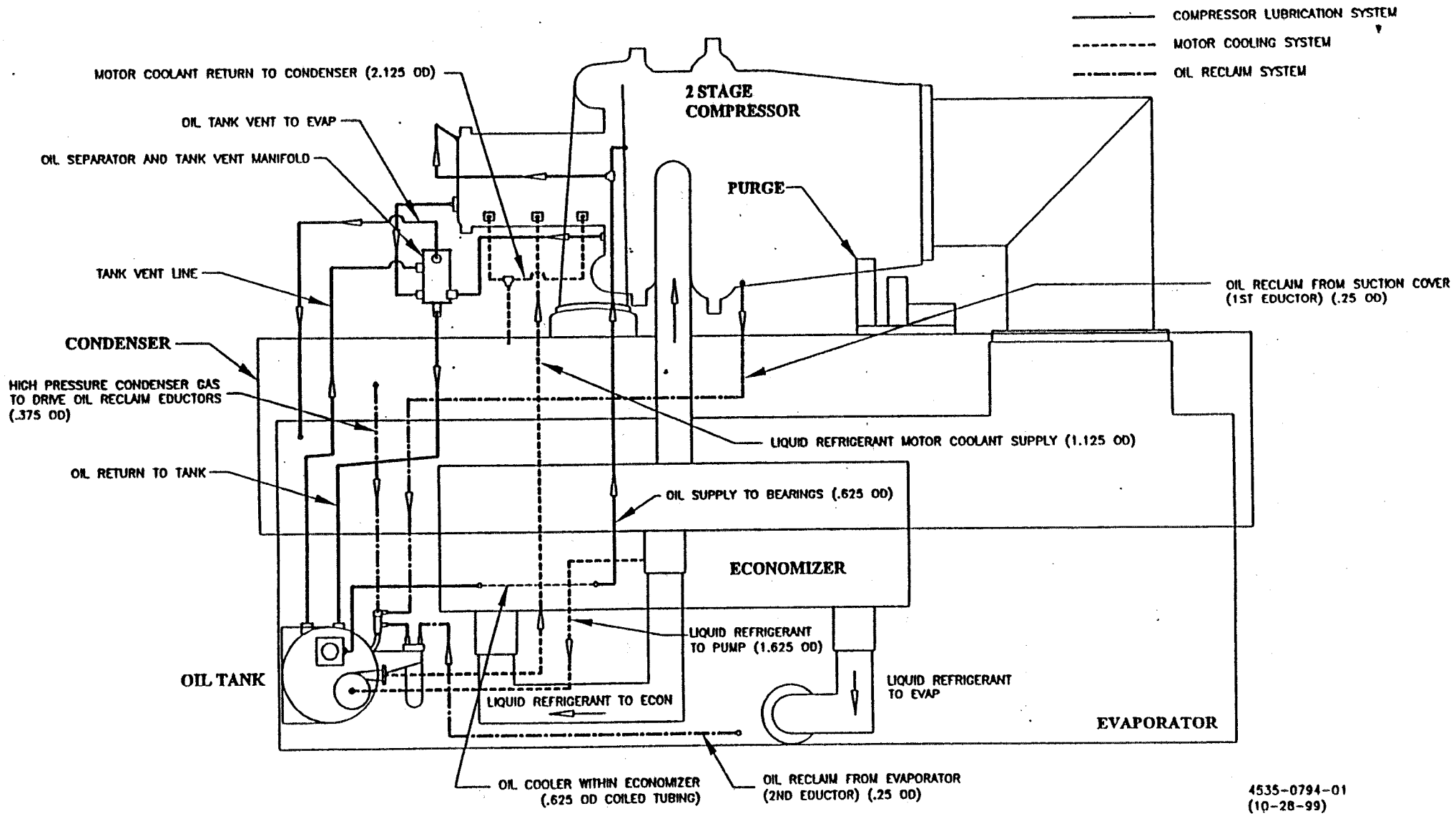

4535-0794-01
(10-28-99)

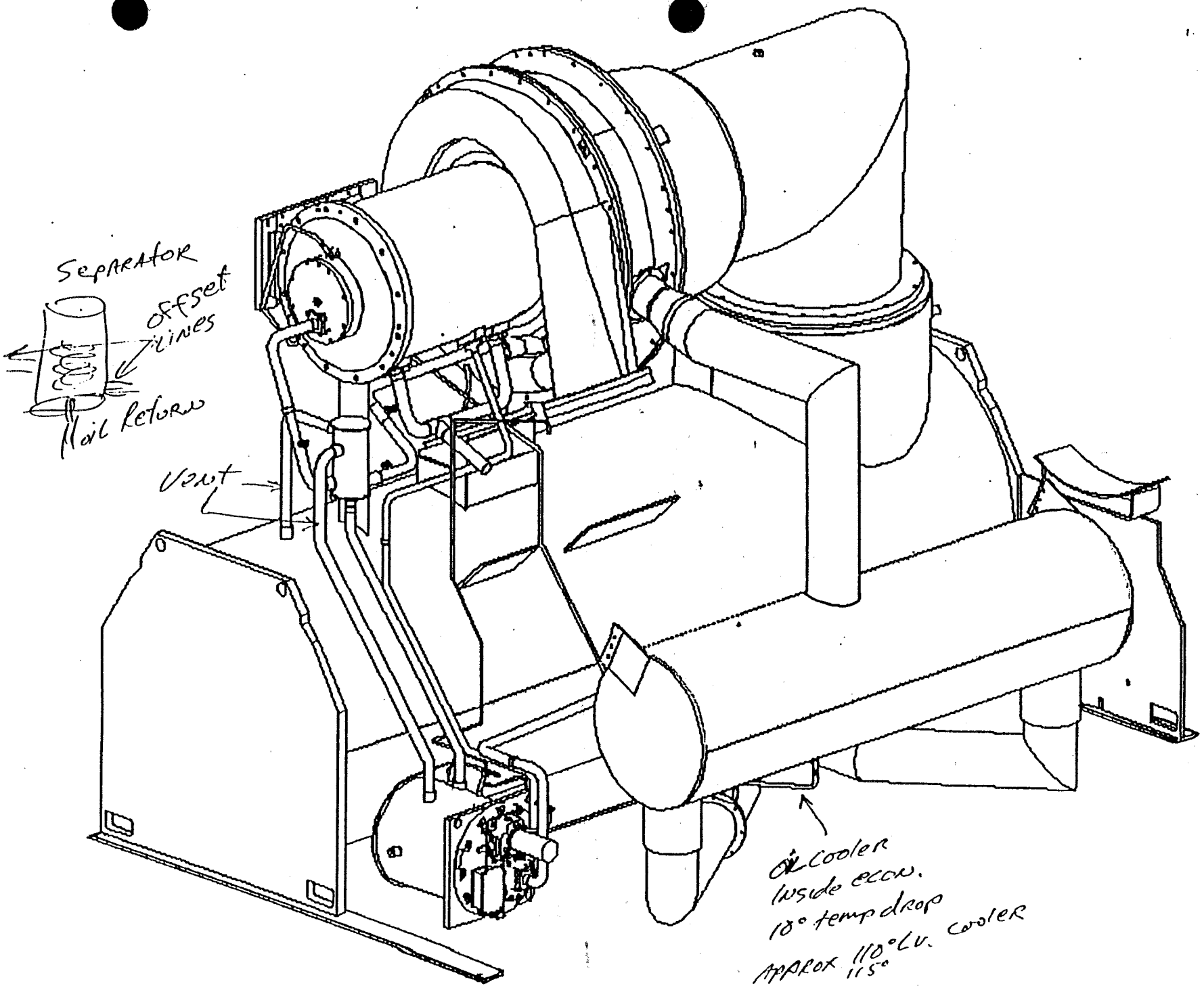
Separator
offset lines
Oil Return
Vent
Oil cooler
Inside ecow.
10° temp drop
Approx 110° Lv. cooler
115°

TRADITIONAL METHOD OF MOTOR COOLING VS. THE REFRIGERANT PUMP

Traditional Method of Motor Cooling

1. Used the natural ΔP (condenser refrigerant pressure – evaporator refrigerant pressure CVHF or low side economizer refrigerant pressure CVHE) to drive the refrigerant through the motor.
2. The liquid refrigerant in the motor flows through a small orifice to the lower refrigerant pressure (as a liquid/gas refrigerant mixture). This liquid/gas refrigerant mixture flows through the motor slots to cool the motor internals.
3. Occasionally, there are special provisions required to prevent moisture condensation on the motor terminal studs.
4. Thermal insulation of the outside of the motor is required to prevent sweating.
5. The minimum ΔP (condenser refrigerant pressure – evaporator refrigerant pressure) is defined by CTV-EB-84.

With The Refrigerant Pump

Better efficiency

1. The refrigerant pump sends condenser liquid refrigerant to the motor. [This improves the cycle efficiency 1 – 1-1/2%].

More Effective Motor Cooling

2. The liquid refrigerant flows through the motor slots to cool the motor internals. [It is more effective to circulate liquid refrigerant (rather than a liquid/gas mixture) through the motor slots.]

No Motor Terminal Sweating

3. No special provisions are required to prevent moisture condensate on the motor terminal studs.
   [The motor terminal studs are at the condensing refrigerant temperature or slightly higher.]

Thermal Insulation of Motor Not Required

4. Thermal insulation of the outside of the motor is not required. [The motor housing is at the condensing refrigerant temperature or slightly higher.]

ΔP (Condenser P_{ref} – Evaporator P_{ref}) is reduced.

5. The minimum ΔP (condenser refrigerant pressure – evaporator refrigerant pressure) is 3 PSID at all loads.

Center

Oil Feed

Thrust Bearing

10/25/1999

CenTraVac Thrust Bearings
History

- 1982
  Bearing clearance I.D.: +.0004 to -.0005 (transition fit)
  Bearing 0609 and 0610

- 1995 (January)
  Bearing clearance I.D. -.0002 to -.0011 (press fit onto a K4 shaft)
  Bearing 0609 and 0610 press onto a K4 shaft with hydraulic nut.
  To get the same equivalent bearing load on a non-K4 shaft
  Use Brg 0913 and 914.

- 1999 (new center feed thrust bearing: Brg 1209 & 1210)
  Bearing clearance -.0002 to -.0011 press fit with the hydraulic nut.
  Bearing 1209 & 1210 have to be used with the K4 shaft only. They can not be used with Non-K4 shafts (reason: non-K4 have a smaller shaft OD) . So the bearings are backward compatible with K4 shafts only.

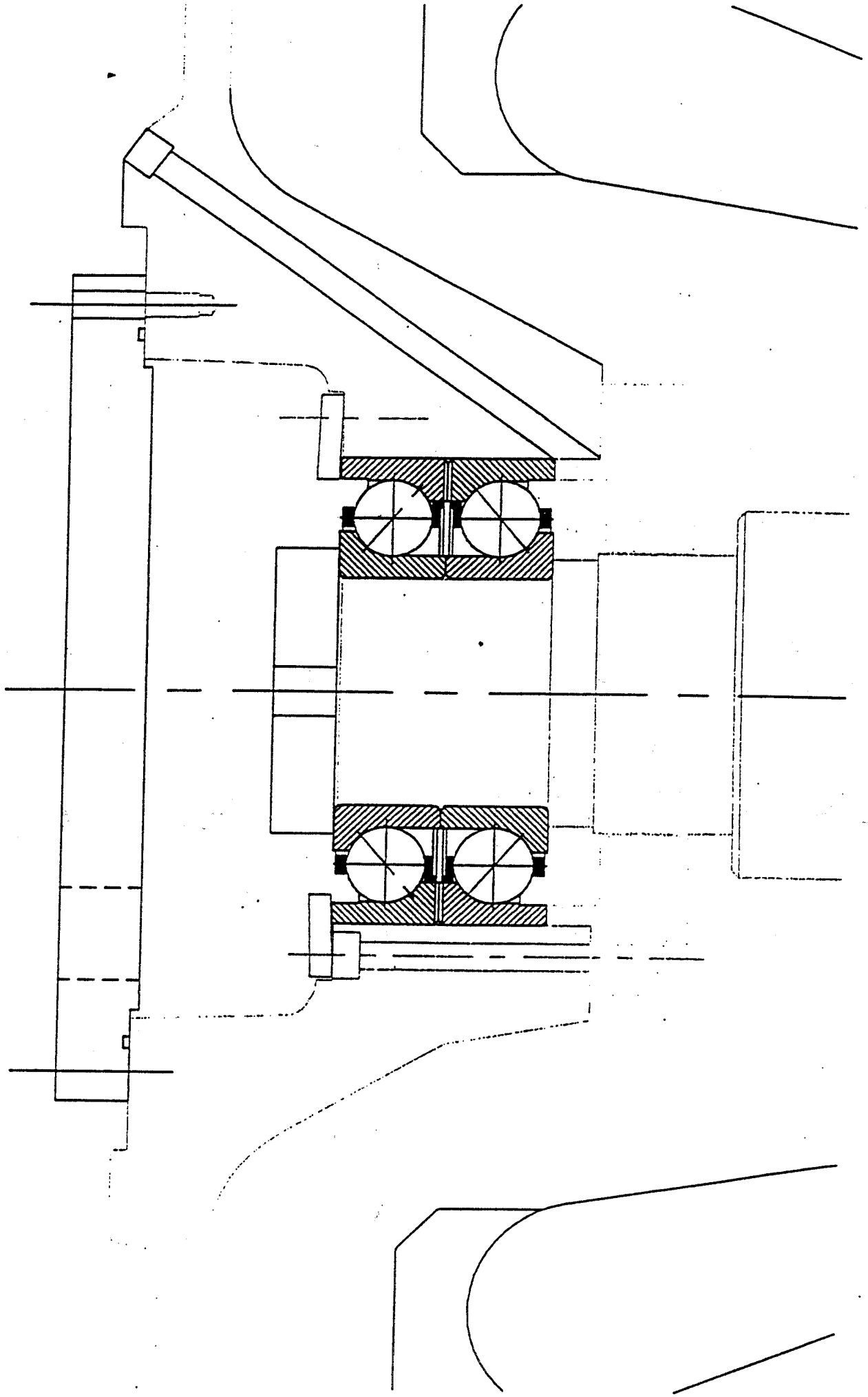

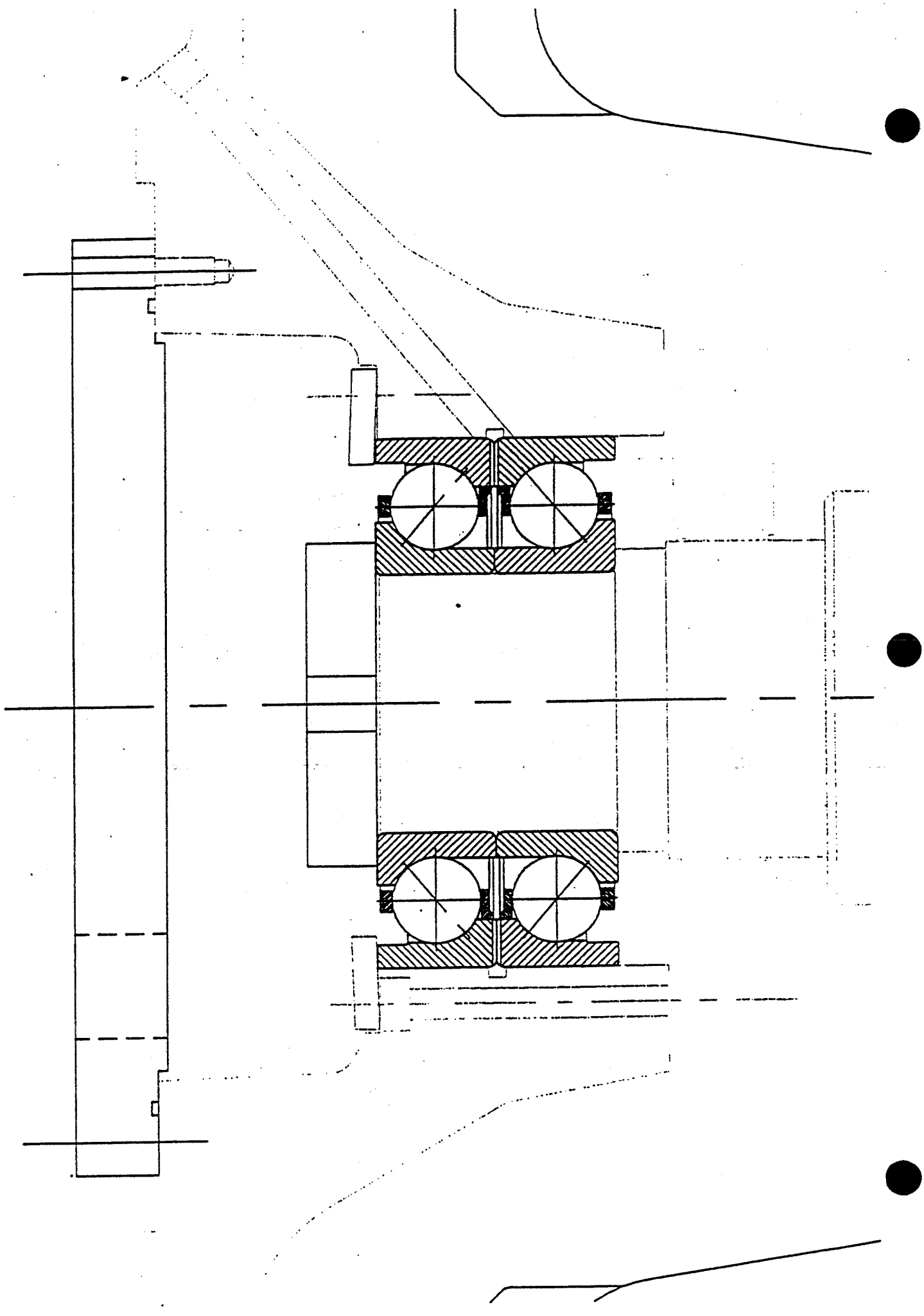

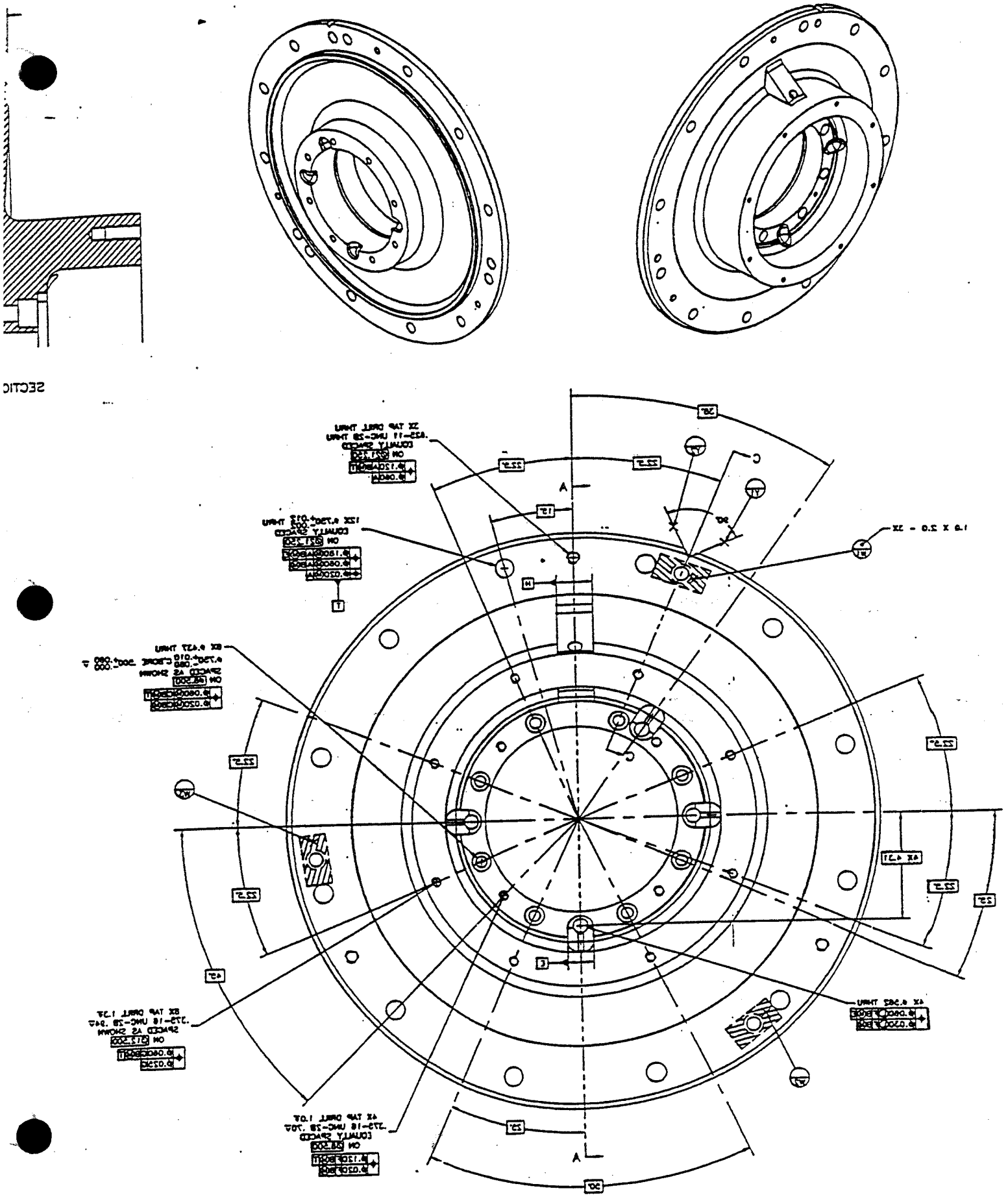

Center feed system
BRG CAP

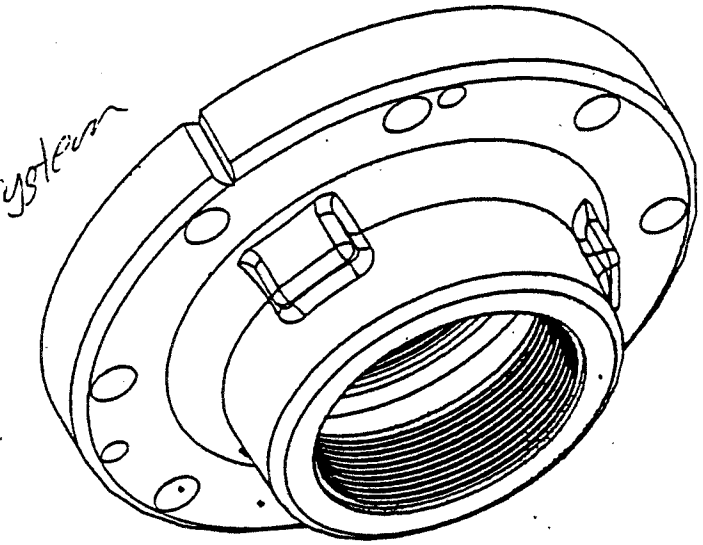

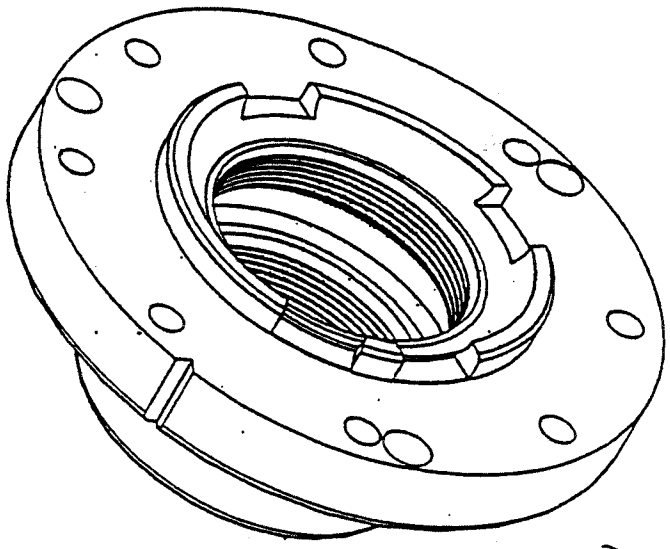

NO GKT USED
SINCE JAN '00

.X ±
.XX ±
.XXX ±
FINISH ✓
ANGLES ± ° HOLE DIA ±
CONFORMS TO ASME Y14.5M-1994.

PRINT
BARTELS
11/30/95
X10010039

E EVENT OF
ENGINEERING INC

NG BOTH
UCTIONS SHALL

Ac MAX ON THE

ARKED WITH A
) WITH DIFFERENT
UNTRY OF ORIGIN.

PAPER OR FOIL,
TH ONE OF THE
09.

OT CHANGE,
. OR MANUFACTURING
TION, OR CHANGE

	OUTER RACE RUNOUT			GROUND FOR BACK TO BACK PRELOAD (LBS)		REFERENCE INFORMATION				SUPPLIER DESIGNATIONS (SKF)
	Kea	SD	Sea			NO OF BALLS	BALL DIAMETER	PITCH DIAMETER	CONTACT ANGLE	
(	MAX	MAX	MAX	MIN	MAX	Z	dw	dm	ALPHA	
13	.0004	.0004	.0004	31	337	11	0.8437	3.4488	40	7311BEMA/P5DBBVE575
	.0006	.0004	.0006	34	360	12	1.2500	5.5118	40	7318BEMA/P5DBBVE575
14	.0006	.0004	.0006	34	360	12	1.3125	5.8071	40	7319BEMA/P5DBBVE575

MATCH MARKING DETAILS
SEE NOTE 5

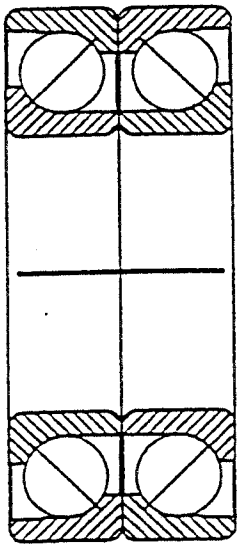

AXIAL LINE CROSSING
BOTH BORE SURFACES

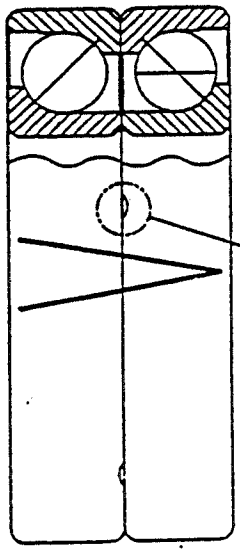

ARROW CROSSING BOTH
OUTSIDE SURFACES

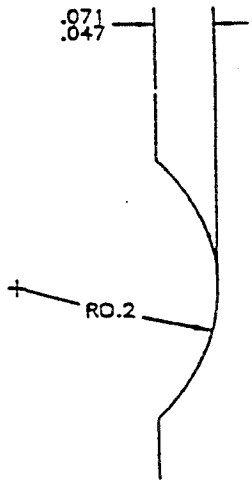

DETAIL A

4 GROOVES (4 X 90°) EA

TRANE®

Service Alert

AFDB

Subject: AFDB VARIABLE FREQUENCY DRIVE - COOLANT SYSTEM INHIBITOR

ORDER No: AFDB-SVA001-EN DATE: March 27, 2001

Introduction:

This service alert recommends procedures and materials to be used when servicing the cooling loop of water-cooled AFDB drives installed on Trane CVHE/F and CDHF chillers.

Discussion:

The approved inhibitor for use in all Trane AFDB 350, 450, 600, 750, and 1000 Hp water-cooled drives is now Trane CHM00172.

The inhibitor is supplied pre-diluted in quart plastic bottles and will be further diluted when mixed with the distilled water of the primary cooling loop. When charging an empty system on a factory installed drive it is recommended that 1-quart (32 oz.) of CHM00172 be installed in the primary cooling loop, regardless of the size of the drive. If pre-mixing distilled water and the inhibitor, or if charging fluid to a field mounted drive with an unknown total fluid capacity, CHM00172 may be mixed at a ratio of approximately 12 oz. per gallon of clean distilled water.

It is recommended that the inhibitor and distilled water of the primary loop be replaced on an annual basis. Inhibitor should always be installed along with a new charge of clean distilled water. Do not simply add inhibitor to an existing or dirty charge of water.

Remaining stocks of inhibitor CHM00159 may be used in 350, 450, and 600 Hp drives only. Do NOT use CHM00159 in the 750 and 1000 Hp drives. This is necessary because of the different materials in the 750 and 1000 Hp drive heat exchanger.

© 20001American Standard Inc. All rights reserved.

Primary Loop Fluid Amounts
The maximum total fluid capacity of the primary cooling loop of the factory installed 750/1000 Hp drive is 3 gallons, the 350/450/600 Hp factory installed drives will require up to 2.5 gallons. Use only clean distilled water and the proper inhibitor as the fluid in the primary cooling loop.

Drain/Fill Procedures

To drain the primary loop it is necessary to attach a hose to the drain valve found on the bottom of the drive. This is the lowest point of the system. Place the opposite end of the hose in an appropriate container and open the drain valve. Loosen the fill plug and bleed port cap that are on the top of the primary loop expansion tank. Allow several minutes for the loop to drain.

To fill an empty primary system you should first ensure that the drain valve on the drive is fully closed. Remove the plug from the water fill connection and the cap from the bleed connection that are on top of the primary loop expansion tank. Add the correct charge of inhibitor to the expansion tank. After the inhibitor is installed add distilled water to the expansion tank until a correct fluid level is observed in the expansion tank sight glass. Start and operate the primary loop cooling pump for a minimum of 2 minutes to evenly mix and distribute the inhibitor and distilled water through the drive. Recheck the fluid level in the expansion tank sight glass during pump operation and immediately add more distilled water if the sight glass indicates a low level.

If a chiller and it's drive is inactive for an extended period of time it is recommended that the drive-cooling pump be started at least once a week and allowed to run for one or two minutes. This will help maintain an even distribution of inhibitor in the system.

It is recommended that the primary loop be completely drained of its fluid if it is not possible to run the drive-cooling pump occasionally during extended storage. Place a tag on the drive that indicates the drive will require service before it can be placed back into operation.

Parts Information:

CHM00172 - Chemical, corrosion inhibitor, quart container

Date of Expiration:

This service alert expires June 30, 2001.

Literature Order Number	AFDB-SVA001-EN
File Number	SV -RF-CTV-AFDB-SVA001-EN-03/27/01
Supersedes	New
Stocking Location	Inland

Since The Trane Company has a policy of continuous product improvement, it reserves the right to change design and specifications without notice. Only qualified technicians should perform the installation and servicing of equipment referred to in this publication .

TRANE®

Service Alert

AFDB

Subject: 1000 Hp AFDB Drives - PRESSURE LIMIT

ORDER No: AFDB-SVA002-EN DATE: March 27, 2001

Introduction:

This service alert states the requirement to limit the water pressure applied to the primary cooling circuits of 1000 Hp AFDB (Rockwell Liqui-Flow) AC Drives.

Disussion:

The 750 and 1000 Hp AFDB AC drives use a sealed primary cooling loop design that has a lower maximum allowable water pressure than the smaller size drives. The maximum allowable water pressure within the primary cooling loop of the 750 and 1000 Hp drive is 50 psig.

Application of more than 50 psi to the primary cooling loop of the 750 or 1000 Hp drive can result in a failure of the drive's internal heat exchanger sealant, resulting in leakage of the cooling medium into the starter enclosure.

Only the 750 and 1000 Hp drives, factory mounted or field installed, are affected. The smaller Liqui-Flow drives (350 Hp, 450 Hp, and 600 Hp) have a 150 psi limit and are not affected by the 50 psi limit..

Action:

When testing or back-flushing the primary loop of a 750 or 1000 Hp AFDB drive, do NOT exceed 50 psi of applied water pressure. Install a gage at the water inlet point and monitor the applied water pressure closely. Throttle or regulate the water flow to maintain an inlet pressure of 50 psi or less. Use an in-line water pressure regulator if available. When flushing the drive do NOT restrict or block the free flow of water out from the drive.

© 20001American Standard Inc. All rights reserved.

Be aware that municipal water pressures in many locations can be 90 psi or even higher, if such pressure is applied directly to a 750 or 1000 Hp AFDB drive internal damage can result. Proper care must be taken.

Expiration Date:

This service alert is discontinued June 30, 2001.

Literature Order Number	AFDB-SVA002-EN
File Number	SVA-RF-CTV-AFDB-SVA002-EN-03/27/01
Supersedes	New
Stocking Location	Inland

Since The Trane Company has a policy of continuous product improvement, it reserves the right to change design and specifications without notice. Only qualified technicians should perform the installation and servicing of equipment referred to in this publication .

TRANE®

General Service Bulletin

AFDB Primary Coolant Loop Service and Maintenance

CVHE, CVHF and CDHF

Order No: AFDB-SVB02A-EN November 12, 2001

Introduction

This service bulletin defines the required procedures and materials to be used when servicing the primary cooling loop of water-cooled AFDB drives installed on Trane CVHE, CVHF and CDHF chillers. This bulletin can also be applied to retrofit AFDC and the CH530 AFDD drives installed on other chillers.

Inhibitor

The approved inhibitor for use in all Trane AFDB 350, 450, 600, 750, and 1000 Hp water-cooled drives is Trane CHM00172. The inhibitor is supplied pre-diluted in quart plastic bottles and will be further diluted when mixed with the distilled water of the primary cooling loop. When charging an empty system on a factory installed drive it is recommended that 1-quart (32 oz.) of CHM00172 be installed in the primary cooling loop, regardless of the size of the drive.

If pre-mixing distilled water and the inhibitor to use as make-up for lost fluid, or if charging fluid to a field mounted drive with an unknown total fluid capacity, CHM00172 may be pre-mixed at a ratio of approximately 12 oz. of CHM00172 per each gallon of clean distilled water. Inhibitor should always be installed along with clean distilled water. Do not simply add inhibitor to an existing or dirty charge of water. Do not add distilled water to a drive unless you have pre-mixed it with the proper inhibitor as described above.

© 2001 American Standard Inc. All rights reserved.

Primary Loop Fluid Amounts

The maximum total fluid capacity of the primary cooling loop of the factory installed 750 and 1000 Hp drive is approximately 3 gallons, the 350, 450 and 600 Hp factory installed drives will require up to 2.5 gallons. Use only **clean distilled water** and the proper inhibitor as the fluid in the primary cooling loop.

Flushing and Cleaning

The use of the proper solution and maintenance intervals will help ensure that the primary cooling loop never needs extensive cleaning or flushing. Back-flushing or flushing the drive heat sink and primary cooling loop is not allowed. If excessive pressure is applied to the drive heat sink it may fail and allow leakage of the cooling medium into the drive enclosure.

CAUTION

Primary Cooling Loop Overpressurization!

The maximum allowable pressure in the primary cooling loop must not exceed 50 psig. Use of pressures above 50 psig may cause structural damage to equipment.

Do not exceed 50 psi of applied water pressure to the 750 or 1000 Hp drive heat exchanger or drive damage may occur. Be observant for the following warning label:

CAUTION

MAXIMUM ALLOWABLE PRESSURE IS 50 PSIG

DO NOT EXCEED MAXIMUM ALLOWABLE PRESSURE

Use of pressure greater than 50 psig may cause structural damage to equipment

X39001794010A

Drain and Fill Procedures

To drain the primary loop it is necessary to attach a hose to the drain valve found on the bottom of the drive. This is the lowest point of the system. Place the opposite end of the hose in an appropriate container or open floor drain and open the drain valve. Ensure that the fill plug and bleed port cap located on top of the primary loop expansion tank are both open. Allow several minutes for the loop to drain freely. **Do not** use compressed air or other pressure sources to force coolant from the drive. To fill an empty primary system you should first ensure that the drain valve on the drive is fully closed. On the top of the primary loop expansion tank remove the plug from the fill connection and ensure the cap on the bleed connection is removed. Add the correct charge of inhibitor to the expansion tank through the fill port. After the inhibitor is installed, add **distilled water** to the expansion tank until a correct fluid level is observed in the expansion tank sight glass. Use a funnel and simple gravity to add the solution components to the expansion tank. **Do not** use a hose with a pump or with city water pressure to add water to the drive as the high pressures that may result can damage the drive. Start and operate the primary loop cooling pump for a minimum of 2 minutes to evenly mix and distribute the inhibitor and distilled water through the drive. Recheck the fluid level in the expansion tank sight glass during pump operation and immediately add more distilled water if the sight glass indicates a low level. **Do not** over fill the expansion tank; insure that there is a minimum of 4-inches (101.1mm) air gap at the top of the tank at all times.

After filling and starting the system, the vent cap or bleed valve on the top of the expansion tank should be left open slightly, so that the expansion tank is exposed to atmospheric pressure. Do not open the cap or bleed valve fully or pre-mature inhibitor depletion due to the excessive contamination with oxygen may occur.

Maintenance Intervals

Once a week the AFD coolant system primary loop should be visually inspected for leakage and for proper solution levels in the expansion tank sight glass. It is recommended, after 12 months, that the primary cooling loop of the AFD drive be drained and refilled with new inhibitor and distilled water.

Storage

If a chiller and its drive is inactive for an extended period of time it is recommended that the drive-cooling pump be started at least once a week and allowed to run for one or two minutes. This will help maintain an even distribution of inhibitor in the system. It is recommended that the primary loop be completely drained of its fluid if it is not possible to run the drive-cooling pump occasionally during extended storage. Place a tag on the drive that indicates the drive will require service before it can be placed back into operation. Drives that will be exposed to freezing temperatures during storage may have a temporary solution of 100% propylene glycol installed to prevent freeze damage. The solution should be installed and the circulating pump should run for several minutes to evenly distribute the solution. At the earliest opportunity and before operation of the drive is allowed the glycol solution must be removed and replaced with the proper inhibitor solution.

TRANE

General Service Bulletin

CVHE-SB-9

Library	Service Literature
Product Section	Refrigeration
Product	Centrifugal Liquid Chillers
Model	CVHE
Literature Type	General Service Bulletin
Sequence	9
Date	1/18/85
File No.	SV-RF-CTV-CVHE-SB-9-185
Supersedes	

SUBJECT: CVHE/CVHB OIL HEATER ELECTRICAL CONNECTIONS

INTRODUCTION:

This service bulletin identifies corretive action to improve the electrical connections used on Model CVHE and CVHB oil tank heaters.

DISCUSSION:

The wire terminal connection between the oil heater element and the connecting wire must have sufficient surface area contact to dissipate heat. If the terminal is undersized or not making proper contact, it can overheat and burn off the wire.

The wiring to the terminal connector can also cause a similar overheating situation if some of the insulation is crimped between the wire and the connector.

The present replacement terminal connectors have more surface contact area which should reduce the potential for overheating and failure of the connector.

CORRECTIVE ACTION:

When it is necessary to replace an electrical connection terminal on CVHE or CVHB oil tank heaters, use the following procedure:

1. Strip off enough insulation from the wire to allow for the wire to be doubled over in the terminal with a 1/16" gap of bare wire between the insulation and the terminal.
2. Use the correct terminal and crimp it in the proper position.

PARTS ORDERING INFORMATION:

The replacement electrical connection terminal for CVHE/CVHB oil heaters is Trane part number TER-807. Order to ship from Location 31.

© THE TRANE COMPANY 1985

COMMERCIAL SYSTEMS GROUP
LA CROSSE, WISCONSIN 54601-7599
PRINTED IN U.S.A.

Since The Trane Company has a policy of continuous product improvement, it reserves the right to change specifications and design without notice. The installation and servicing of the equipment referred to in this booklet should be done by qualified, experienced technicians.

TRANE

General Service Bulletin

CVHE-SB-10

Library	Service Literature
Product Section	Refrigeration
Product	Centrifugal Liquid Chillers
Model	CVHE
Literature Type	General Service Bulletin
Sequence	10
Date	2/28/85
File No.	SV-RF-CTV-CVHE-SB-10-285
Supersedes	

SUBJECT: MODEL CVHE CENTRAVACS - COMPRESSOR DOWELING

INTRODUCTION:

This service bulletin describes the procedure for doweling a CVHE compressor/motor assembly prior to lifting it from the shells. Doweling is factory installed on a special order basis. If factory doweling is not provided, do not separate the compressor/motor assembly from the shells until locating dowels have been installed.

DISCUSSION:

The compressor/motor assembly can be removed from the shells in cases where installation access is limited. Misalignment of the compressor castings can occur when a compresssor assembly without doweling is moved.

The alignment of the compressor/motor assembly is determined by the position of the discharge volute. A shift in volute position at either the discharge flange or the compressor foot can change the suction elbow to compressor alignment. When the suction elbow is tightened to final torques, the compressor/motor assembly can shift from its original position. The resulting interference between seals and rotating components can adversely affect machine performance. The third stage volute must be doweled at the discharge flange and at the compressor foot.

Dowel pins are also required between the casings since it is possible for the casings to shift position relative to each other. The compressor assembly procedure calls for the seal clearances to be set after the casings are in place, which means that a shift in position can take up the seal clearances and cause interference.

If the compressor is disassembled for repair or component replacement, doweling is not required because the seals can be set as the compressor is reassembled.

Since The Trane Company has a policy of continuous product improvement, it reserves the right to change specifications and design without notice. The installation and servicing of the equipment referred to in this booklet

Dowel pins are recommended at the following locations when the unit is disassembled in the field.

1. Compressor foot
2. Compressor discharge to condenser flange (2 places)
3. Motor to compressor volute
4. Compressor volute to casing
5. Casing to casing
6. Suction cover to casing

Figure 1
Discharge Flange
Doweling

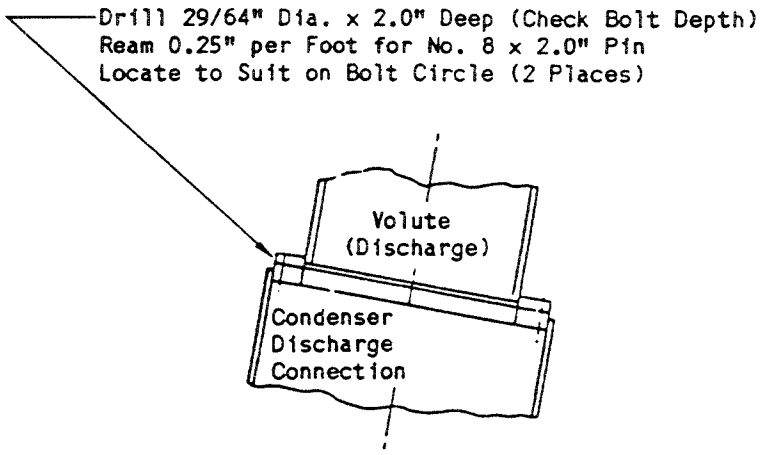

Figure 2
Compressor Foot
Doweling

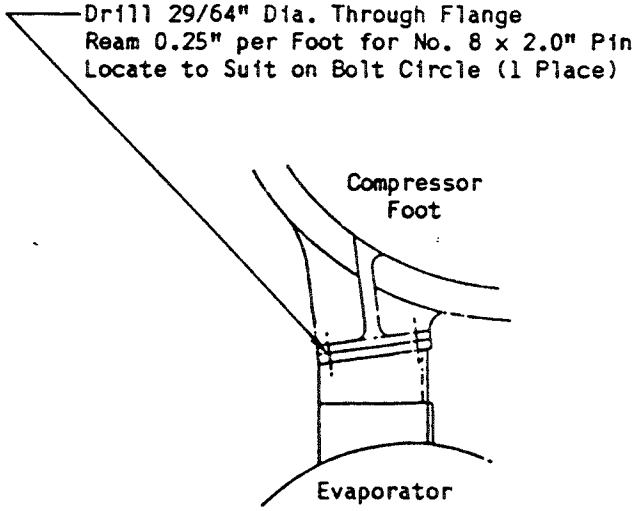

Figure 3
Compressor Doweling

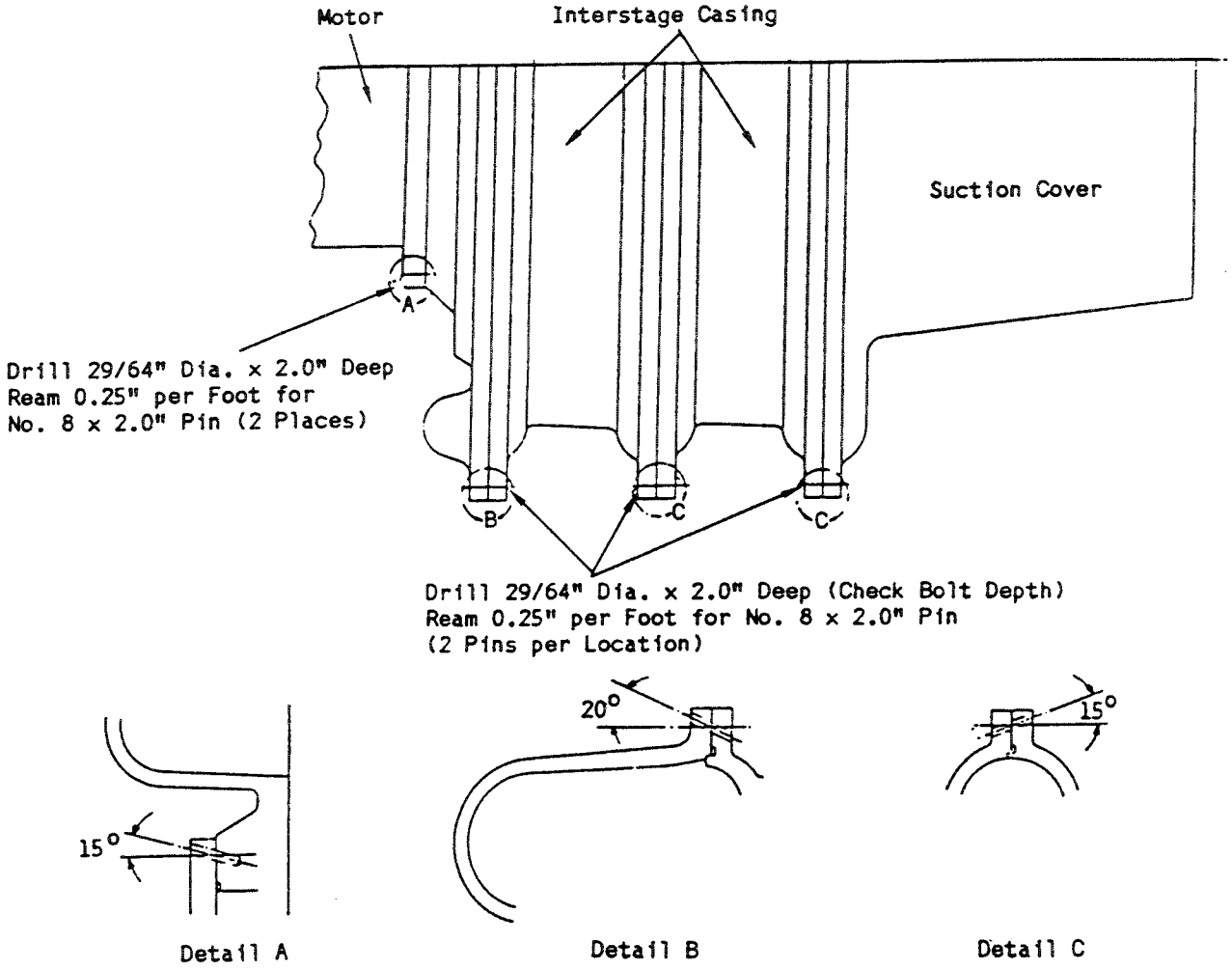

Note: Two Dowel Pins Required for each
Flange Joint - 90 Apart.

PROCEDURE:

The following procedure can be used to dowel the units prior to disassembly.

The following tools will be required:

- Drill bit for 7/16" or 29/64" diameter.
- Tapered reamer for 0.25" per foot (or No. 8 dowel).
- No. 8 dowel pins.
- Various hand tools.

1. Dowel the condenser discharge flange at two locations and the compressor foot at one point. The drilled holes into the discharge flange of the condenser should be no deeper than the existing bolt holes. Deeper holes

will penetrate the flange and cause refrigerant leakage. The same size dowel pins can be used in all locations.

2. Use the 29/64" drill bit and tapered reamer at the locations indicated in Figures 1 and 3. The pilot area of the reamer must be removed to ream those holes that are blind. Be sure the holes do not penetrate the flange.

3. Install all dowel pins except those on the third stage discharge flange, and the compressor foot connection to the evaporator.

4. Refer to Table 1 for the number of dowels required and the appropriate depth of the holes. To determine the depth of the dowel hole at the motor flange to discharge volute, remove a bolt and measure the hole depth. The holes should be drilled straight whenever possible. However, they can be angled when necessary up to the maximum shown in Figure 3.

The compressor/motor assembly can now be removed. Refer to Installation manual CVHE-IN-3 for details.

Table 1
Dowel Information

COMPRESSOR SIZE	MOTOR TO DISCHARGE VOLUTE	VOLUTE TO VOLUTE (3 PLACES)	DISCHARGE FLANGE	COMPRESSOR FOOT
013-020	(2)No. 8 x 2.0"	(6)No. 8 x 2.0"	(2)No. 8 x 2.0"	(1)No. 8 x 2.0"
022-032	(2)No. 8 x 2.0"	(6)No. 8 x 2.0"	(2)No. 8 x 1.5"	(1)No. 8 x 2.0"
035-050	(2)No. 8 x 2.0"	(6)No. 8 x 2.0"	(2)No. 8 x 2.0"	(1)No. 8 x 2.0"
055-080	(2)No. 8 x 2.0"	(6)No. 8 x 2.0"	(2)No. 8 x 2.0"	(1)No. 8 x 2.0"
089-125	(2)No. 8 x 2.0"	(6)No. 8 x 2.0"	(2)No. 8 x 2.0"	(1)No. 8 x 2.0"

Note: All pins (Trane part number PIN-84) are 2.5" in length. Dimensions in table are length of engagement.

PARTS ORDERING INFORMATION:

The dowel pins are Trane part number PIN-84, and can be ordered on the COOL system, to ship from Location 31.

FOR FURTHER INFORMATION ON THIS PRODUCT OR OTHER TRANE PRODUCTS, REFER TO THE "TRANE SERVICE LITERATURE CATALOG", ORDERING NUMBER IDX-IOM-1. THIS CATALOG CONTAINS LISTINGS AND PRICES FOR SERVICE LITERATURE SOLD BY TRANE. THE CATALOG MAY BE ORDERED BY SENDING A $15.00 CHECK TO: THE TRANE COMPANY, SERVICE LITERATURE SALES, 3600 PAMMEL CREEK ROAD, LA CROSSE, WI 54601.

TO HELP ENSURE OPTIMUM PERFORMANCE, BE SURE TO SPECIFY QUALITY TRANE PARTS.

PRINTED BY PRODUCTION SERVICES — LA CROSSE KC/DJL

TRANE™

General Service Bulletin

CVHE-SB-11

Library	Service Literature
Product Section	Refrigeration
Product	Centrifugal Liquid Chillers
Model	CVHE
Literature Type	General Service Bulletin
Sequence	11
Date	4/12/85
File No.	SV-RF-CTV-CVHE-SB-11-485
Supersedes	

SUBJECT: CVHE COMPRESSOR TO CONDENSER O-RING REPLACEMENT

INTRODUCTION:

This service bulletin describes a method to replace the compressor to condenser discharge o-ring on Model CVHE CenTraVacs. This procedure recommends rigging and movement of the compressor/motor assembly as a single unit.

DISCUSSION:

When rigging heavy components, such as the compressor/motor assembly, it is important to use the proper lifting locations to insure adequate safety. The safety chain and rigging members should have a sufficient safety factor to support the weight of the entire compressor/motor assembly. The compressor/motor assembly weights are given in Table 1.

Table 1
Compressor/Motor
Assembly Weights

Unit Size	Compressor/Motor Weight (lbs.)
013-020	5,665
022-032	6,880
035-050	7,175
055-080	9,175
089-125	11,125

Before the compressor/motor assembly is lifted from the shells, the third stage casing must be doweled to insure proper alignment of the suction elbow during reassembly. Doweling between individual casing components is not necessary if

Since The Trane Company has a policy of continuous product improvement, it reserves the right to change specifications and design without notice. The installation and servicing of the equipment referred to in this booklet should be done by qualified, experienced technicians.

the connecting bolts have been checked for proper torque. Doweling is necessary when the assembly will be removed and transported. Refer to service bulletin CVHE-SB-10 for compressor doweling.

Move the compressor/motor assembly just enough to clean the flange surfaces and replace the compressor discharge to condenser and compressor to suction elbow o-rings.

O-RING REPLACEMENT PROCEDURE:

Use the following procedure to replace the compressor discharge to condenser and compressor to suction elbow o-rings.

1. Remove the refrigerant from the unit by pressurizing it with dry nitrogen to 2 or 3 psig. After all the liquid refrigerant has been removed, connect a vacuum pump to the unit to create a partial vacuum (25 to 26") to remove the remaining refrigerant. Once the partial vacuum is achieved, bring the unit to atmospheric pressure (0 psig) using dry nitrogen.

2. The condenser discharge flange should be doweled in two places and the compressor foot in one place before separating the assembly from the shells. See Figures 1 and 2 for the preferred doweling locations. Refer to service bulletin CVHE-SB-10 for doweling details.

Figure 1
Discharge Flange
Doweling Detail

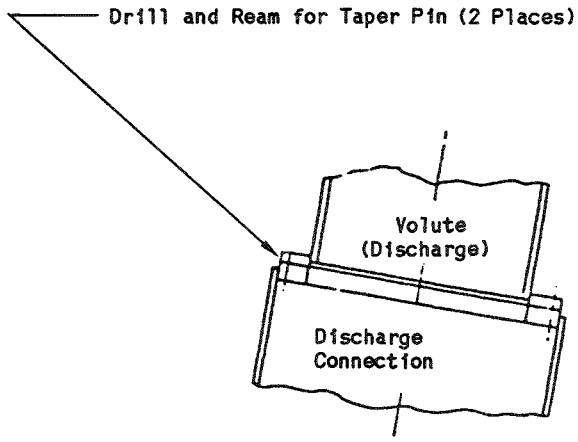

3. Rigging of the compressor/motor assembly is important due to the weight involved. On larger units where the compressor foot is not a level pad, the compressor/motor assembly will have a tendency to rotate toward the motor terminal side. The recommended method for picking up the entire compressor/motor assembly involves the use of a portable gantry as shown in Figure 3. One of the A-frames is used to support the motor end of the assembly, while the other is used to support the first stage compressor suction housing. Attach a safety chain to the motor at the terminal casing to prevent rotation of the entire assembly.

© The Trane Company 1985
Commercial Systems Group
La Crosse, Wisconsin 54601
Printed In U.S.A.

Figure 2
Compressor Foot
Doweling Detail

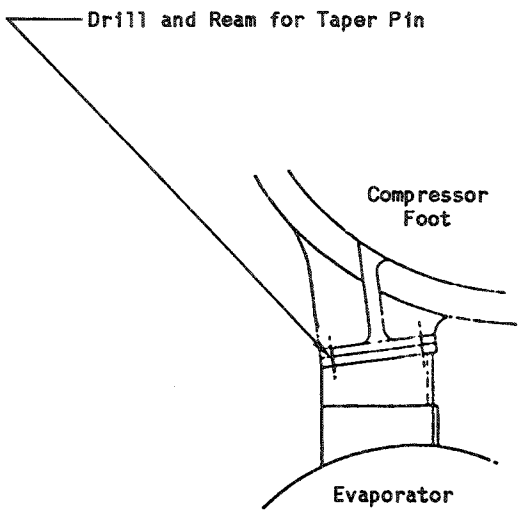

Figure 3
Recommended Compressor/
Motor Assembly Lifting
Equipment

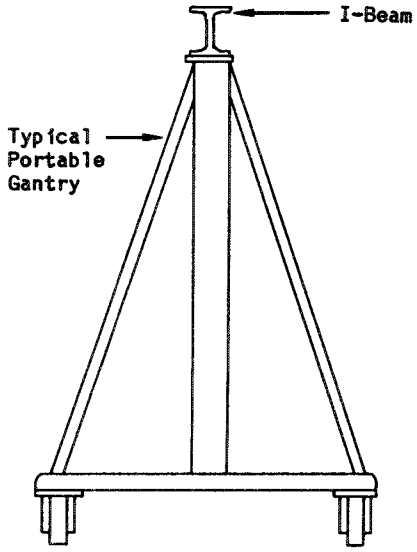

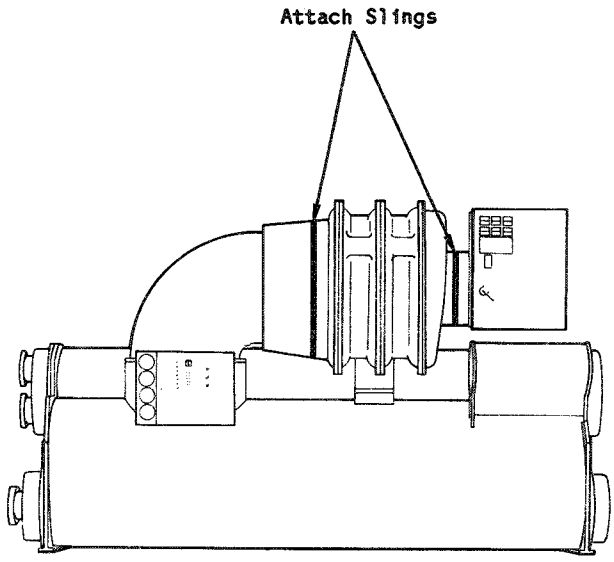

Set up the rigging and attach it to the compressor/motor assembly to the point where it will just begin supporting the weight of the assembly. Before lifting the assembly from the shells, complete the following steps. Cover all openings immediately to prevent the entrance of debris and contamination to the internal side of the motor and chiller.

a. Disassemble the suction elbow to suction cover connection.

1. Disconnect and remove the control panel support bracket. See Figure 4.

2. Remove the bolts on the suction cover to suction elbow connection. The suction elbow will be left attached to the evaporator through all remaining steps.

b. Remove the economizer vent lines to the compressor.

1. Loosen the bolts on the condenser liquid line flange which is located at the bottom of the condenser. See Figure 4. Do not remove the bolts at this time.

2. Loosen the bolts on the evaporator liquid line flange which is near the bottom of the evaporator. See Figure 5. Do not remove the bolts at this time.

3. Place a floor jack under the economizer sump as shown in Figure 6 to support the weight of the economizer. The economizer should be supported by wrapping a sling or chain, supported by an overhead lift or A-frame, around it. Both support methods require a lifting capacity of 3,000 pounds.

Figure 4
Control Panel
Support Bracket

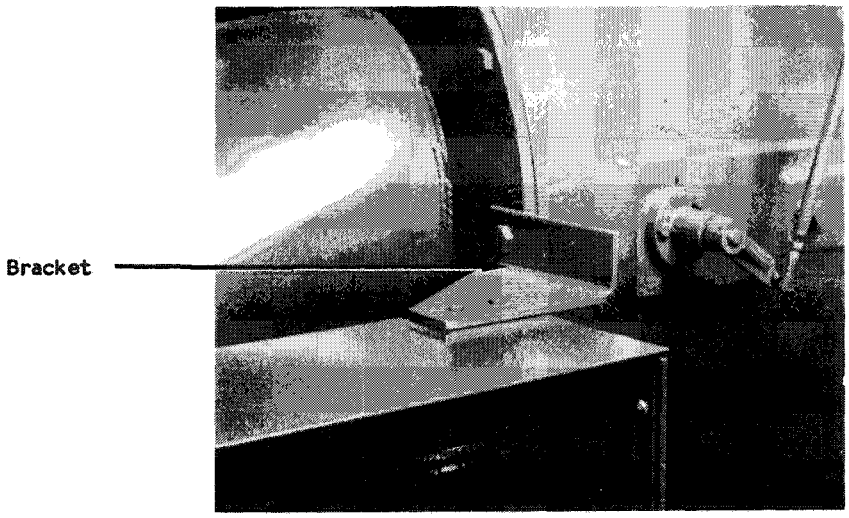

4. Loosen the economizer vent pipe bolts which hold the vent pipe flanges to the compressor interstage castings. Do not remove the bolts.

5. Remove the bolts from the condenser and evaporator liquid lines. Adjust the floor jack or overhead lift, as necessary, to support the weight of the economizer.

Figure 5
Condenser Liquid
Line Flange

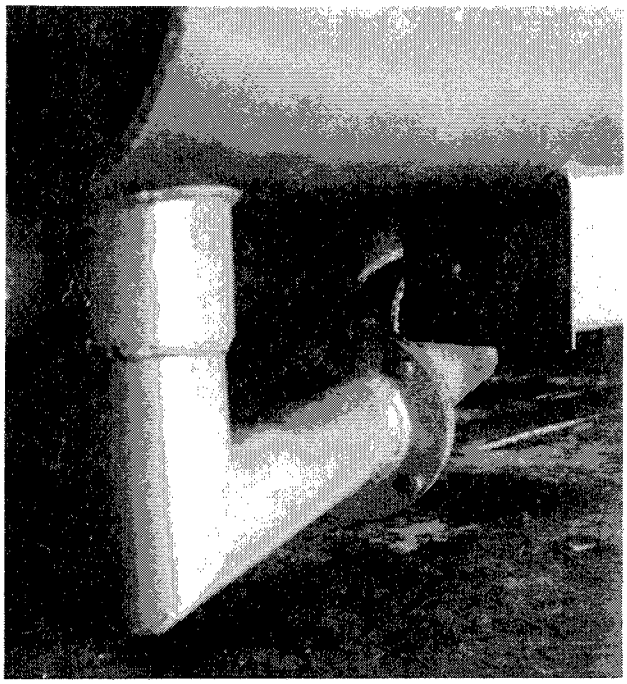

Figure 6
Evaporator Liquid
Line Flange

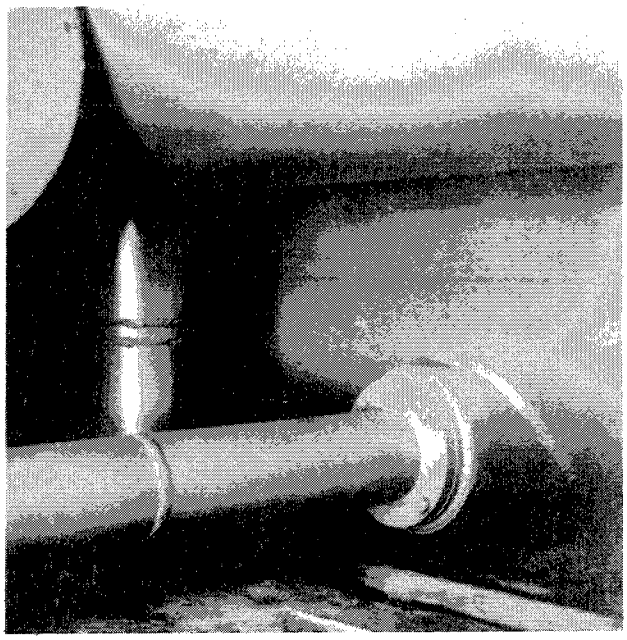

6. Carefully remove the economizer vent pipe flange bolts and loosen the economizer. When the bolts are free, back the economizer away from the chiller. See Figure 7. If a floor jack is being used, the economizer will tend to rotate off the jack towards the compressor. Be prepared to offset this rotation.

c. The remaining connections are motor cooling lines, oil supply lines and drain lines. See Figure 8. Many of these are flare or flange connections that can be removed. On those lines that must be cut, remove any paint to minimize internal chiller contamination.

1. Cut the 7/8" vent line between the oil sump and the suction cover. Sand off all paint where the cut will be made. Make the cut in a straight section of pipe with a pipe cutter. Refer to Figures 9 and 10.

2. Disconnect the oil supply and return lines at the thrust end of the motor. See Figures 11 and 12.

3. Disconnect the refrigerant supply and drain lines from the motor by unbolting the flanges from the motor. See Figures 13 and 14.

Figure 7
Removing the
Economizer



d. Various electrical connections must be disconnected to facilitate movement of the compressor/motor assembly.

Note: Some models have enough slack in the conduit harness to allow movement of the compressor/motor assembly without removal of all of the connecting wiring.

1. If the unit has a factory mounted motor starter, remove it from the motor terminal casting. Remove and mark all motor power leads and interconnecting wiring of the factory mounted starter. If a remote starter is used, mark and disconnect the motor power leads and remove the conduit box.

2. Mark and remove the motor winding temperature sensor leads.

3. Mark and disconnect all power leads to the inlet vane actuator motor. Remove the conduit assembly from the actuator motor.

4. With the appropriate electrical and piping connections removed, the compressor can be lifted away from the unit. Remove the connecting bolts at the compressor foot and discharge flange. As an added precaution, install guide rods before removing the bolts to prevent the compressor/motor assembly from rolling towards the motor terminal side of the unit. The compressor should be raised approximately 10 inches to facilitate the o-ring changeout. Place wood blocks between the flanges to prevent shifting of components. Remove the old o-ring and clean the mating surfaces. Check the o-ring groove and mating surfaces for knicks and burrs which could deform the o-ring.

Figure 8
Motor Cooling
Supply and
Drain Lines

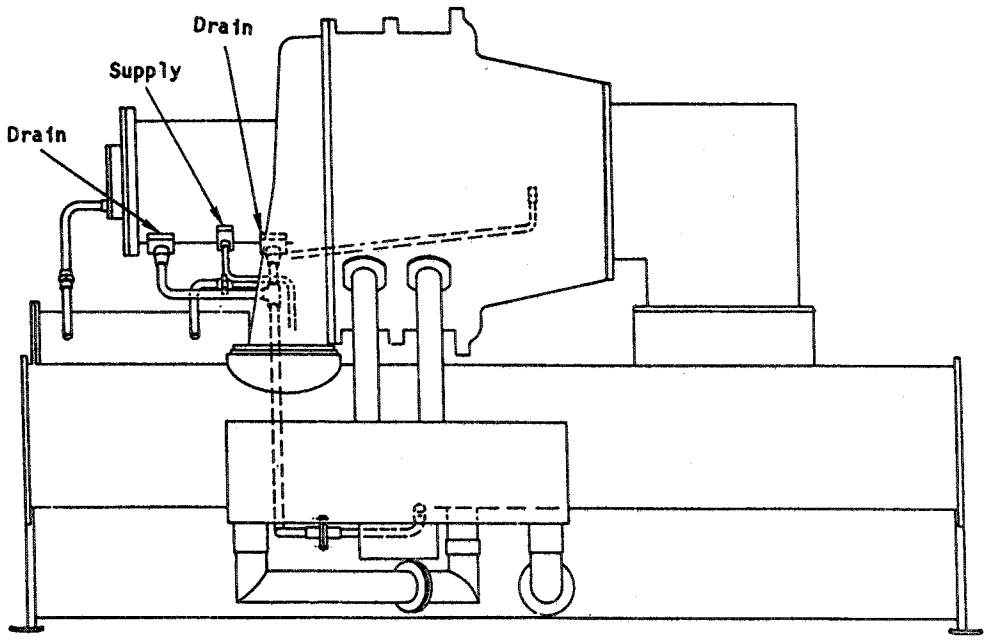

5. Place a bead of Loctite 515 into the o-ring groove, install the o-ring and apply a bead of Loctite 515 on top of it. This will make up for any minor imperfections in the castings.

   The suction elbow connection at the suction cover should also have a new o-ring installed. This o-ring should be held in place with vaseline. Do not use Loctite at this connection because it may flow into the gap between the inlet vane housing and the suction cover which could make further removal of the inlet vane housing very difficult. Once both o-rings are in place, move the compressor toward the suction elbow and lower it into position.

6. Install the discharge flange and compressor foot bolts. Snug them down to prevent the compressor from shifting. Install the dowel pins to locate the compressor/motor assembly. After the dowel pins are installed, tighten the discharge flange and compressor foot bolts to their torque of 150 ft. lbs. Tighten the suction elbow using Figure 15 for the tightening sequence. Connect the economizer and make all piping and electrical connections using new gaskets and o-rings. Any brazing should take place while nitrogen is bled through the line to minimize oxidation. All copper to copper joints must be brazed according to A.W.S. B-CUP-3 (SIL-Phos). After all of the connections are made, pressurize and leak test the unit. After leak testing, evacuate the unit to 2.5 millimeters and recharge it.

Figure 9
Sanding Paint
Off Vent Line

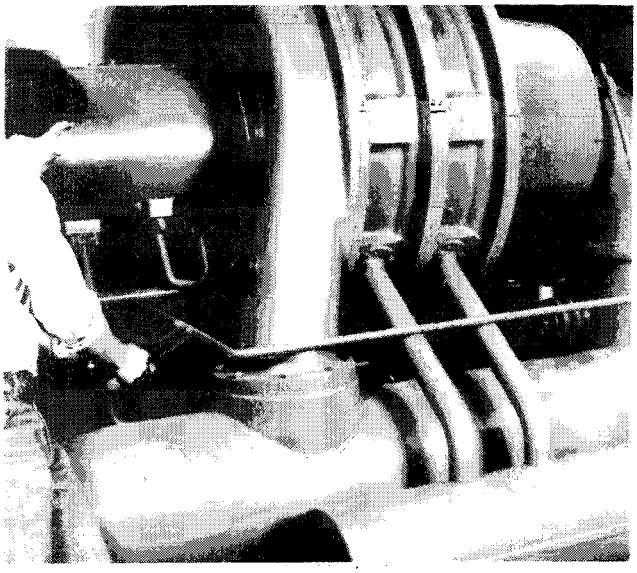

Figure 10
Cutting the
Vent Line

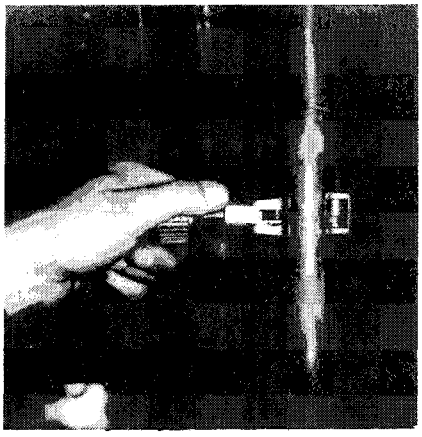

Figure 11
Thrust End Oil
Drain and Supply
Lines

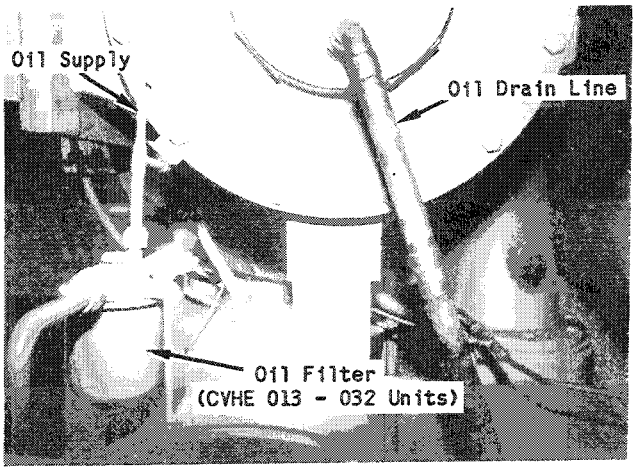

Figure 12
Motor Cooling
Refrigerant Supply
and Drain Lines

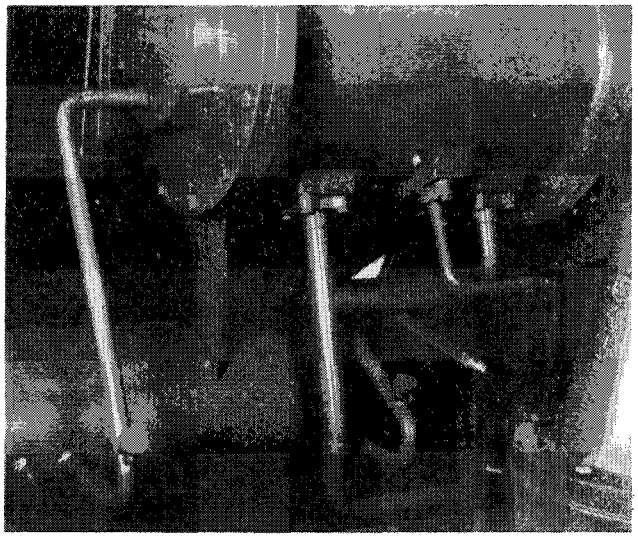

Figure 13
Refrigerant
Supply Flange

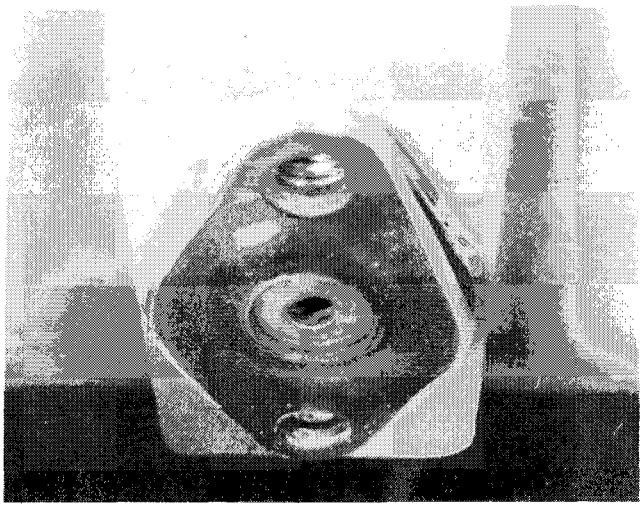

Figure 14
Refrigerant Drain
Flange and Back
Bracket



Figure 15
Suction Elbow Flange
Bolt Tightening Sequence

Bolt Size	Torque
1/2"	70 ft.-lbs.
5/8"	150 ft.-lbs.
3/4"	250 ft.-lbs.

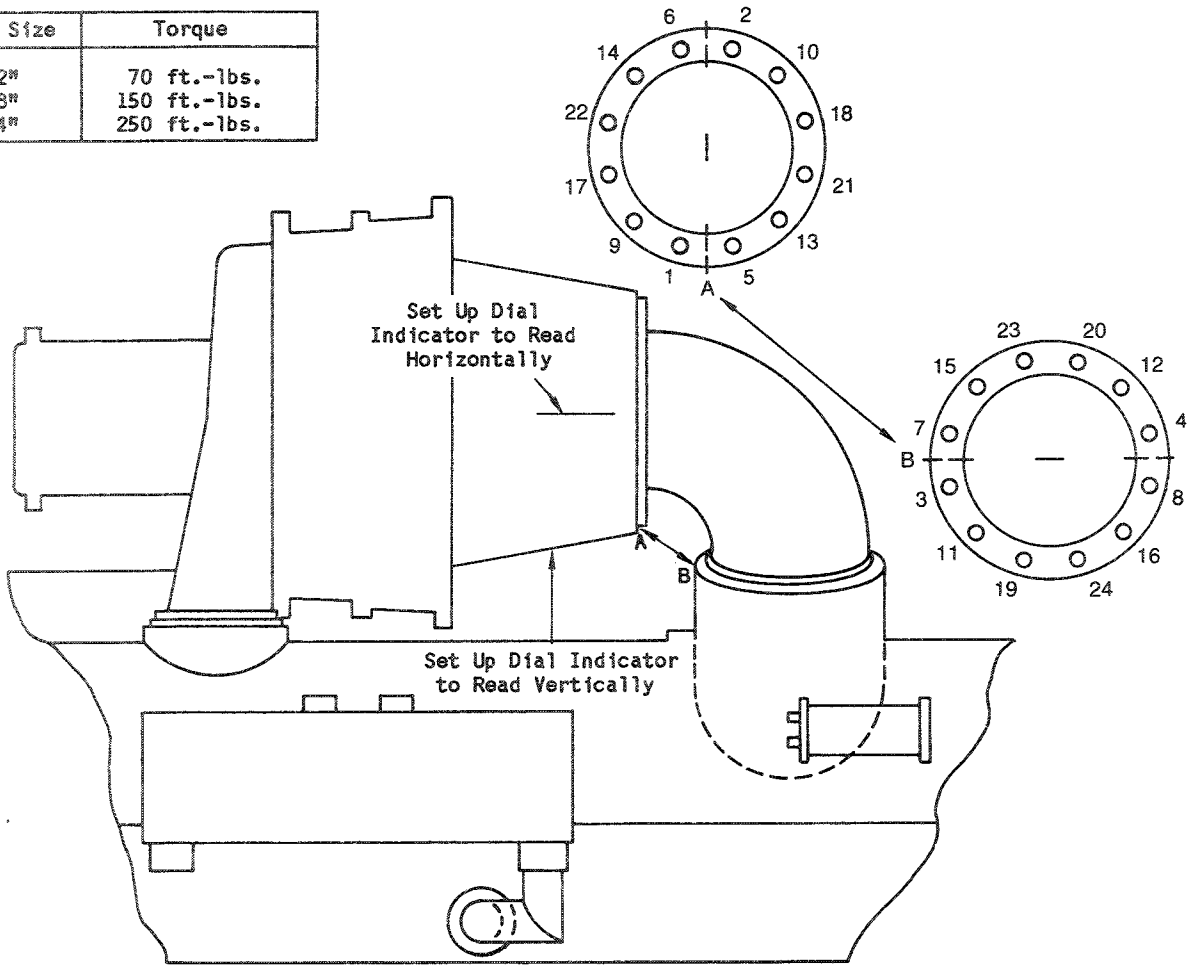

TRANE

General Service Bulletin

CVHE-SB-12A

Library	Service Literature
Product Section	Refrigeration
Product	Centrifugal Liquid Chillers
Model	CVHE
Literature Type	General Service Bulletin
Sequence	12A
Date	4/19/85
File No.	SV-RF-CTV-CVHE-SB-12A-485
Supersedes	

Literature Changes:

Modified "Parts Ordering Information".

SUBJECT: CVHE/CVHB MOTOR OVERLOAD MODULE PROTECTION

INTRODUCTION:

This service bulletin discusses the addition of a surge suppressor across the power supply of CVHE and CVHB solid state motor overload modules. The addition of the suppressor is recommended to provide protection from high voltage spikes which can lead to module failures.

DISCUSSION:

A number of Cutler-Hammer overload modules (Trane part number RLY-765) that have been returned as failed, appear to have been exposed to a high voltage condition. This high voltage could have been caused by inadvertent application of 110 volts through the low voltage side of the module or through transient line voltage spikes which can enter the module through its power supply. The module can be protected from these voltage spikes by the addition of a surge suppression device that connects to the module power supply. These devices are generally referred to as MOV's (metal oxide varistors).

CORRECTIVE ACTION:

Surge suppressors should be installed on all CVHE and CVHB units with solid state overload modules at unit start-up. Units which are being retrofitted to add the new solid state motor protection module should also have the suppressor added. Units that are already started should have the surge suppressor added on an opportunity basis such as a service call or annual maintenance.

Since The Trane Company has a policy of continuous product improvement, it reserves the right to change specifications and design without notice. The installation and servicing of the equipment referred to in this booklet should be done by qualified, experienced technicians.

Install a surge suppressor in the unit control panel across terminals 2 and 3 as shown in Figure 1. The suppressor (MOV) should have the following values:

- Maximum RMS volts -150
- Maximum energy rating - 80 joules
- Average power dissipation - 1 watt
- Peak pulse amps - 6,500

A surge suppressor can only protect against high voltage surges that do not exceed its design rating. Voltage surges in excess of this rating will cause the suppressor to fail. A failed surge suppressor is evident due to its almost total physical destruction. Failure of the suppressor will not interfere with the operation of the unit control system. Periodic inspection of the suppressor should be included with other normal maintenance procedures.

PARTS ORDERING INFORMATION:

The part number for the surge suppressor is SPS-11.

Figure 1
Surge Suppressor
Mounting Location

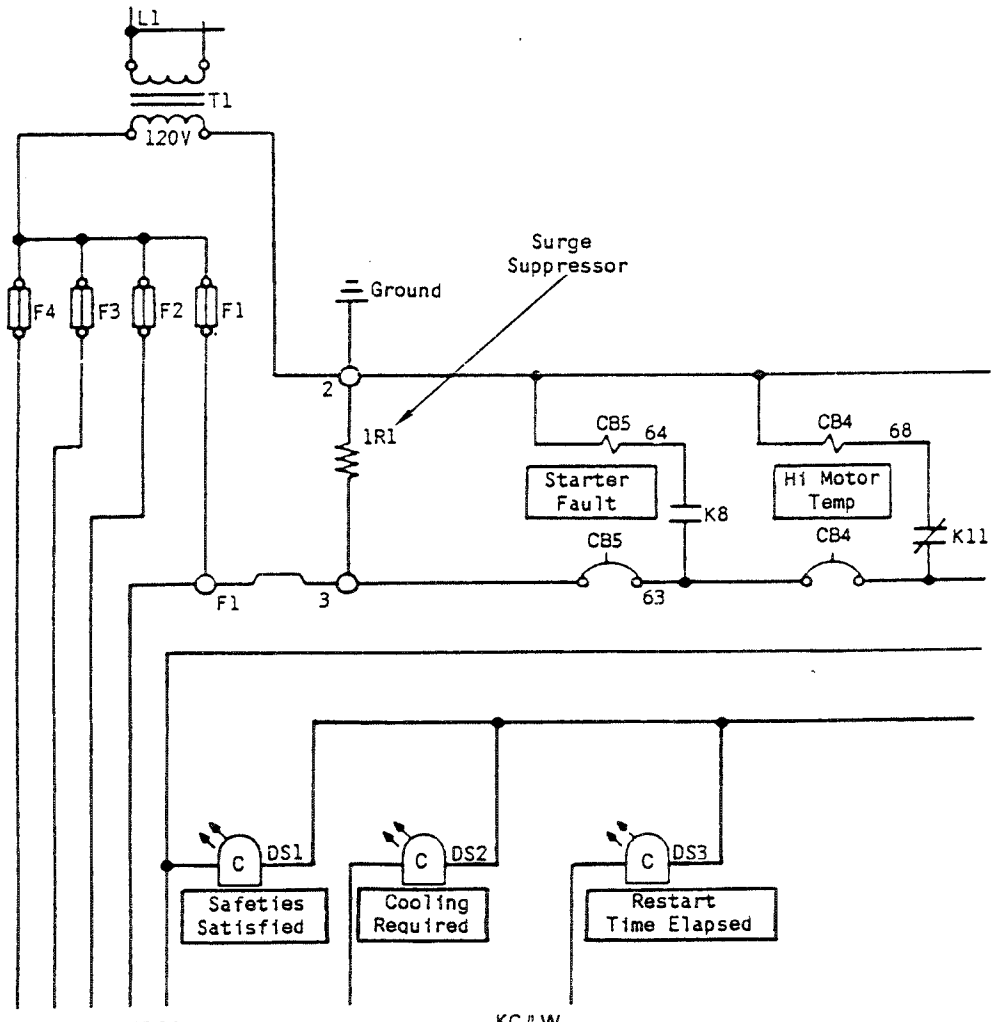

KC/LW

© The Trane Company 1985
La Crosse, Wisconsin 54601
Printed In U.S.A.

TRANE

General Service Bulletin

CVHE-SB-15

Library	Service Literature
Product Section	Refrigeration
Product	Centrifugal Liquid Chillers
Model	CVHE
Literature Type	General Service Bulletin
Sequence	15
Date	10/14/86
File No.	SV-RF-CTV-CVHE-SB-15-1086
Supersedes	

SUBJECT: "STARTER-FAULT" BREAKER/K10 RELAY RACE (CVHEs OF "A" THRU "J" DESIGNS)

INTRODUCTION:

Nuisance tripping of the unit control panel's "starter-fault" circuit breaker may occur in CVHEs of "A" through "J" design as a result of a "relay race" between the K10 relay and the auxiliary contacts on the 1M (K27) contactor. This service bulletin discusses why these nuisance trips occur, as well as what can be done to prevent them.

DISCUSSION:

Ordinarily, a normal "start" signal from Terminal 14 of the unit control panel energizes the 1M (K27) contactor which, in turn, closes 2 sets of normally-open auxiliary contacts. (Refer to the typical electrical schematic in Figure 1.) The auxiliary contacts located between Wires 13 and 14 (Lines 26 and 29) close first, followed by those located between Wires 19 and 20 (Line 33).

Notice that closure of the auxiliary contacts between Wires 13 and 14 establishes a "holding" circuit for the "start" signal before the contacts between Wires 19 and 20 can close. This sequence of events assures that the "start" signal is not interrupted when the K10 relay energizes and opens its normally-closed contacts between Wires 82 and 14 (Line 29).

Let's look at what would happen if the contact closure sequence were reversed. Once the inhibit circuit (Line 26) is satisfied (i.e., evaporator and condenser water flows are proven, and oil pressure is established), a "start" signal is sent to the starter panel through the normally-closed set of K10 contacts. If the K10 relay energizes (via closure of the auxiliary contacts between Wires 19 and 20) before the "holding" circuit is established, the starter energizes--but only momentarily. As soon as the normally-closed K10 contacts between Wires 82 and 14 open, the starter panel drops out of the circuit, and the unit control panel's "starter fault" circuit breaker trips 15 to 20 seconds later.

Since The Trane Company has a policy of continuous product improvement, it reserves the right to change specifications and design without notice. The installation and servicing of the equipment referred to in this booklet should be done by qualified, experienced technicians.

Figure 1
Typical Electrical Schematic
for CVHE Units w/Electronic
Capacity Control
("F" thru "J" Designs Shown)

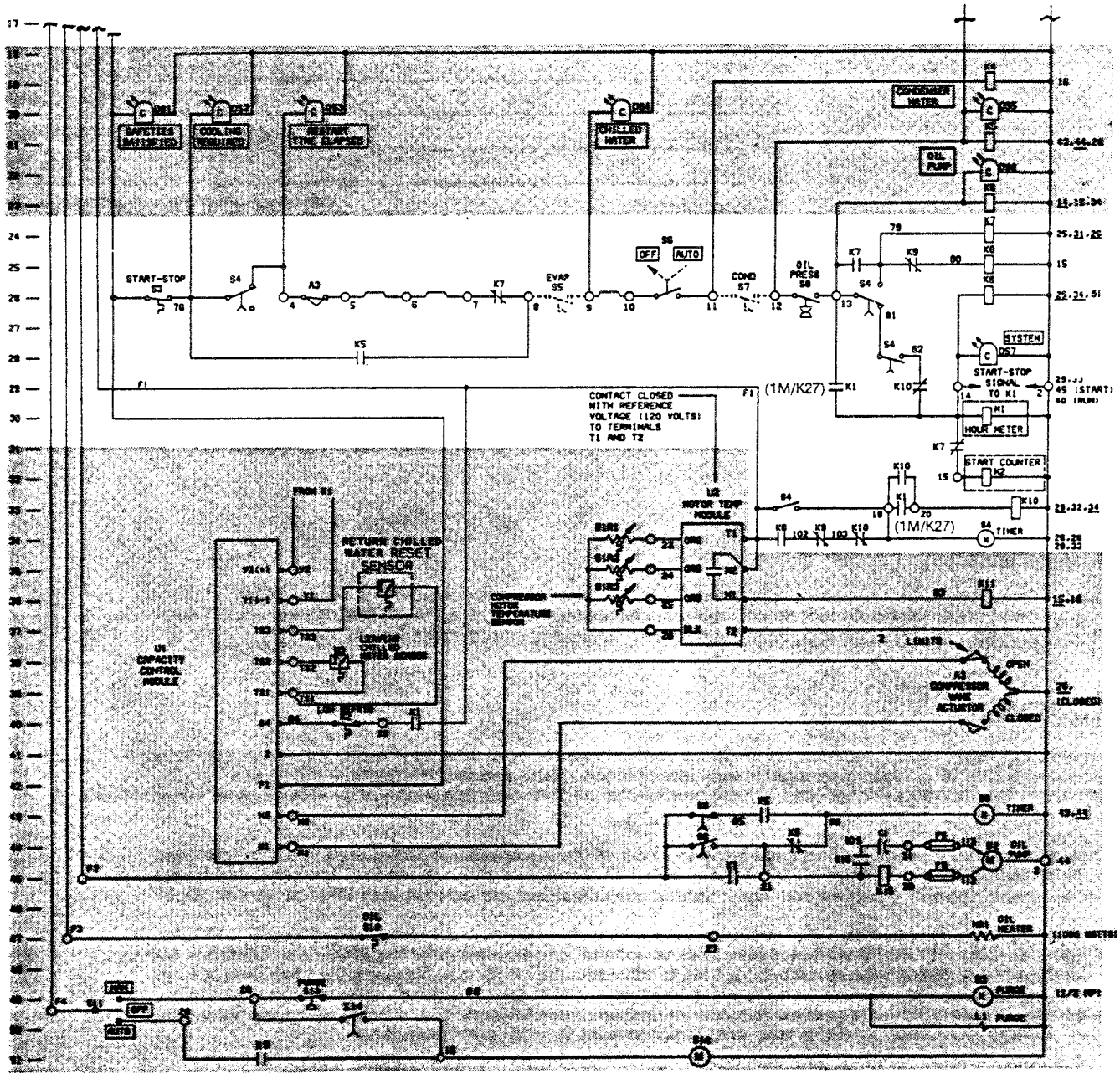

WARNING
DISCONNECT ELECTRICAL POWER SOURCE TO PREVENT INJURY OR DEATH FROM ELECTRICAL SHOCK

CAUTION
Use copper conductors only to prevent equipment damage

Drwg. X39470376

The Trane Company
La Crosse, Wisconsin 54601-7599
Printed in U.S.A.

©American Standard Inc. 1986

CORRECTIVE ACTION:

Following are 2 solutions designed to eliminate nuisance "starter fault" circuit breaker trips caused by a "relay race" between the K10 relay and the 1M (K27) contactor:

1. Establish the correct wiring sequence for Wires 13 and 14, and Wires 19 and 20.

Ensure that Wires 13 and 14 are connected to a set of normally-open, auxiliary contacts on the 1M (K27) contactor; contacts selected for this purpose should be located as close to the auxiliary-contact actuator as possible (i.e., the auxiliary switch located nearest the starter back panel). Then, connect Wires 19 and 20 to a set of normally-open auxiliary contacts located farther out on the auxiliary contact stack.

This wiring arrangement encourages establishment of the "holding" circuit before the normally-closed contacts of the K10 relay can open.

Note: The corrective action recommended above will successfully eliminate nuisance "starter fault" circuit breaker trips in most instances. However, if adjustments to the wiring sequence of Wires 13-14 and Wires 19-20 do not prevent this type of nuisance trip from recurring, it may be necessary to install a time delay relay. See Item 2 below for instructions.

2. Add a 0.3-second time delay relay to the K10 relay circuit.

Connect the normally-open contacts of 0.3-second time delay relay in series with the K10 relay; make sure that the contacts of the time delay relay are installed upstream of the K10 relay coil. Figure 2 illustrates this wiring arrangement.

The addition of this relay postpones the energizing of the K10 relay by 0.3 seconds, thereby assuring that the start signal "holding" circuit is established before the normally-closed K10 contacts open.

Figure 2
Addition of a 0.3-Second Time Delay Relay to the K10 Relay Circuit

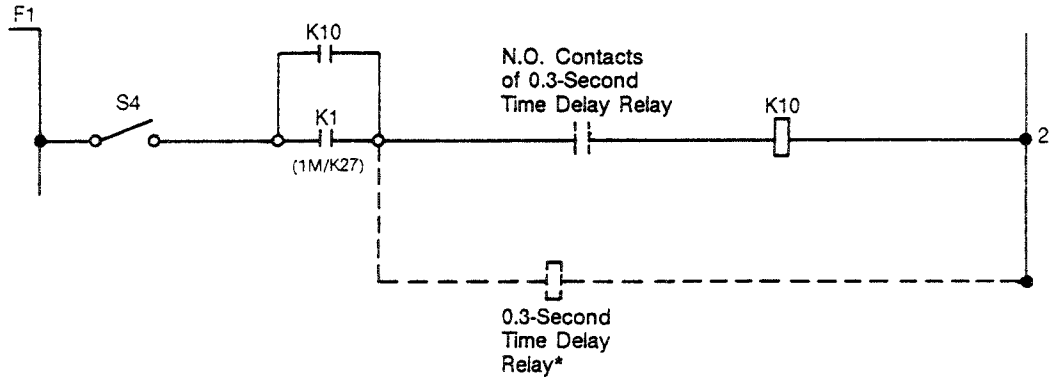

*The 0.3-second time delay relay typically used for this purpose is RLY-872.

For further information on this product or other Trane products, refer to the "Trane Service Literature Catalog", ordering number IDX-IOM-1. This catalog contains listings and prices for all service literature sold by Trane. The catalog may be ordered by sending a $20.00 check to: The Trane Company, Service Literature Sales, 3600 Pammel Creek Road, La Crosse, WI 54601.

PRINTED BY PRODUCTION SERVICES — LA CROSSE BB/LW

TRANE™

General Service Bulletin

CVHE-SB-16

Library	**Service Literature**
Product Section	**Refrigeration**
Product	**Centrifugal Liquid Chillers**
Model	**CVHE**
Literature Type	**General Service Bulletin**
Sequence	**16**
Date	**3/20/87**
File No.	**SV-RF-CTV-CVHE-SB-16-387**
Supersedes	

Subject: UCP695/SCP699 Sensor Identification and Locations

Introduction:

This service bulletin clarifies the proper identification of sensors used with CenTraVac UCP695 and SCP699 control panels.

Discussion:

Based on the number of similar questions regularly received from the field, it is apparent that there is some confusion about the sensors used with both UCP695 chiller control panels and SCP699 system control panels. Most of these questions pertain either to sensor identification or sensor location in the chiller system.

Tables 1 and 2—along with Figures 1 and 2—specifically identify each sensor in the UCP/SCP control system by the characteristics listed below. The relative location of each UCP695 and SCP699 temperature sensor is illustrated in Figures 3 and 4, respectively.

a. sensor description (e.g., "leaving evaporator water temperature sensor")
b. Trane mnemonic part number (e.g., "SEN-132")
c. vendor code number (e.g., "X13790038-01")
d. electrical designation (e.g., "4RT1")
e. installed location (e.g., "connecting 'water-out' piping from evaporator")
f. control panel terminal connections

Since The Trane Company has a policy of continuous product improvement, it reserves the right to change specifications and design without notice. The installation and servicing of the equipment referred to in this booklet should be done by qualified, experienced technicians.

Figure 1
Original-Style Sensor
Used w/UCP695 Chiller Control Panels

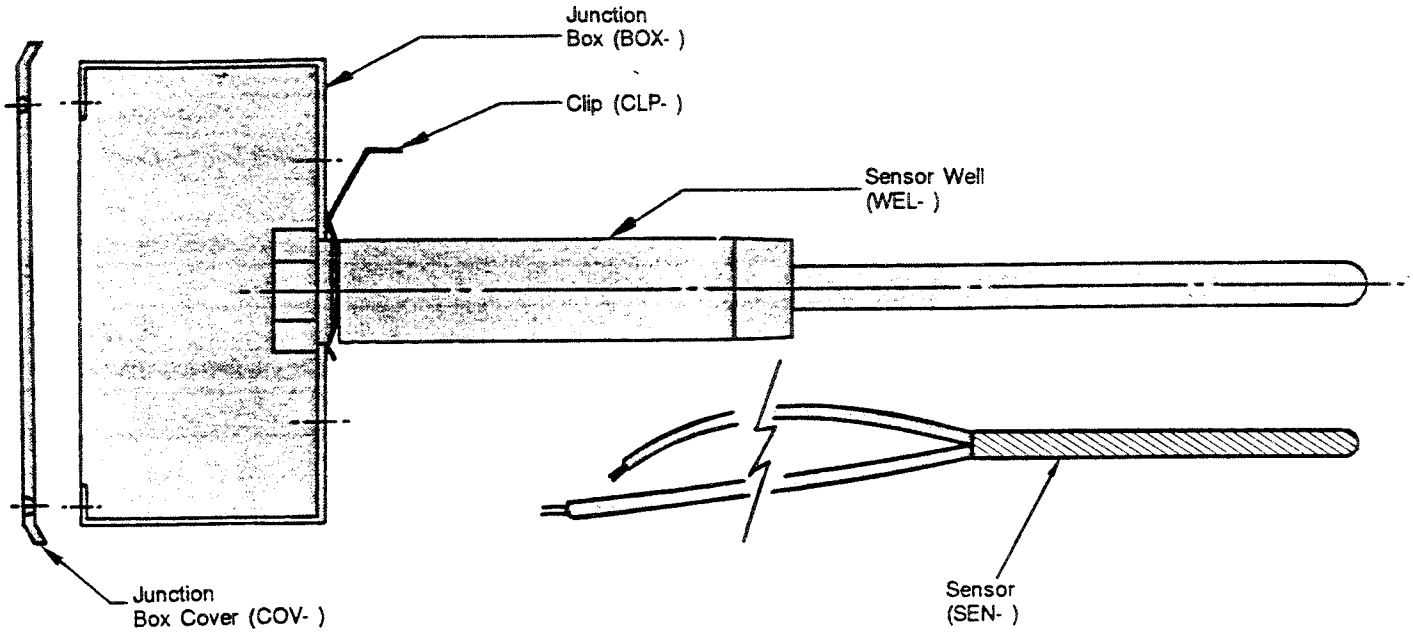

Notes:
1. See Table 1 for sensor characteristics and part numbers.
2. Apply heat-conductive resin (RSN-2) to the end of the sensor before inserting it into the well.
3. Mnemonic abbreviations for each component are enclosed in parentheses.
4. Not shown: conduit locknut NUT-20.

Drwgs. 4532-6154,
X13790002

The Trane Company
La Crosse, Wisconsin 54601-7599
Printed in U.S.A.

©American Standard Inc. 1987

Table 1
Original-Style Sensors Used w/CVHE UCP695 Chiller Control Panels (See Figure 1)

Sensor Part Nos. (See Notes 1 and 4)		Sensor Characteristics			Elec. Connections	
Trane Mnemonic	Vendor Code	Description	Elec. Desig.	Physical Location	Wire Nos.	Cont. Panel Terminations
SEN- 113	X13790002-02	Standard Leaving Evaporator Water Temperature Sensor Only (Note 2)	4RT1	Insert in bulbwell in connecting water piping (water out)	104 105	1TB3- 1 1TB3- 2
		Condenser Refrigerant Temp. Sensor (UCP Tracer Monitoring Package, Option)	n/a	Epoxy to condenser refrigerant line between condenser and condenser/ economizer flange	127 128	1TB3-14 1TB3-15
		Optional UCP Ambient Temp. Sensor (Ambient-Based CWR)	4RT6	Fresh air intake or north wall of building	127 128	1TB3-14 1TB3-15
SEN- 96	X13790002-03	Evaporator Refrigerant Temperature Sensor	4RT5	Lower evaporator well	102A 103A	1TB3-12 1TB3-13
SEN- 114	X13790002-05	Oil (Sump) Temperature Sensor	4RT7	Oil sump well	110A 111A	1TB4-13 1TB4-14
		Optional "Inboard" Bearing Temperature Sensor	4RT8	Install in well (if present) in compressor-end oil return line, or epoxy to underside of line	133 134	1TB4-19 1TB4-20
		Optional "Outboard" Bearing Temperature Sensor	4RT9	Install in well (if present) in opposite-compressor-end oil return line, or epoxy to underside of line	135 136	1TB4-21 1TB4-22
SEN- 118 (Note 3)	X13790002-06	Ent. Evaporator Water Temperature Sensor	4RT2	Insert in well in connecting water piping (water in)	121 122	1TB3- 3 1TB3- 4
		and				
		Lvg. Evaporator Water Temperature Sensor	4RT1	Insert in well in connecting water piping (water out)	104 105	1TB3- 1 1TB3- 2
		Optional Ent. Condenser Water Temperature Sensor	4RT3	Insert in well in connecting water piping (water in)	123 124	1TB3- 5 1TB3- 6
		and				
		Optional Lvg. Condenser Water Temperature Sensor	4RT4	Insert in well in connecting water piping (water out)	125 126	1TB3- 7 1TB3- 8

Notes:

1. Trane's mnemonic part number appears on the outside of the box containing the sensor(s); the vendor code number is stamped on the sensors
2. Do not order this sensor to replace one of a matched sensor pair (e.g., entering and leaving water temperature sensors for the evaporator or condenser).
3. Ordering SEN-118 yields a matched pair of sensors. Sensors used as a matched pair must be replaced as a pair; do not replace an individual sensor from a pair!
4. Other components required to install each sensor are listed below (and identified in Figure 1):
   a. For SEN-113 and SEN-118 used for water temperature applications (4RT1 thru 4RT4):
      BOX-802, CLP-158, COV-91, RSN-2 and WEL-46.
   b. For SEN-114 used for oil sump temperature applications (4RT7):
      BOX-802, CLP-158, COV-91, RSN-2 and WEL-46.
   c. For SEN-114 used for bearing temperature applications (4RT8, 4RT9), unless epoxied to oil return lines:
      BOX-802, COV-91, NUT-20, RNG-178, RSN-2 and WEL-30.
   d. For SEN- 96 used for evaporator refrigerant temperature applications (4RT5):
      BOX-802, CLP-158, COV-91, RSN-2 and WEL-46.

Figure 2
Current-Style Sensor Used w/UCP695 Chiller Control Panels and SCP699 System Control Panels

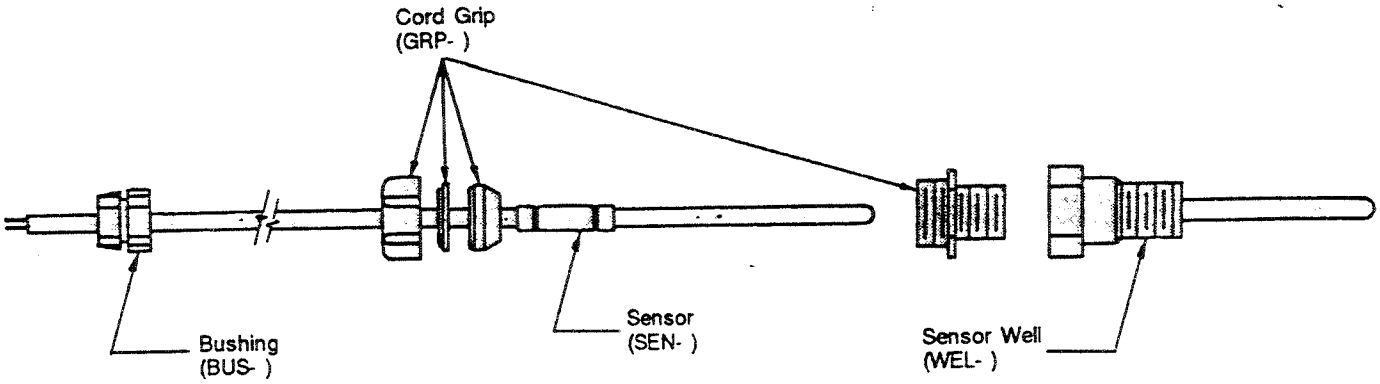

Notes:
1. See Table 2 for sensor characteristics and part numbers.
2. Mnemonic abbreviations for each component are enclosed in parentheses.

Drwgs. 4533-1710,
X13790038

Table 2
Current-Style Sensors Used w/UCP695 Chiller Control Panels and SCP699 System Control Panels (See Figure 2)

Sensor Part Nos. (See Notes 1 and 4)		Sensor Characteristics			Elec. Connections	
Trane Mnemonic	Vendor Code	Description	Elec. Desig.	Physical Location	Wire Nos.	Cont. Panel Terminations
SEN- 132	X13790038-01	Standard UCP Lvg. Evaporator Water Temperature Sensor Only (Note 2)	4RT1	Insert in bulbwell in connecting water piping (water out)	104 105	1TB3- 1 1TB3- 2
		Optional SCP Free Cooling Temperature Sensor (Thermostatic FC Control)	n/a	Insert in bulbwell in common condenser water return line, or outside air	217 218	TB2- 1 TB2- 2
		Optional SCP Condenser Water Temperature Sensor (SCP Condenser Limit Option)	n/a	Insert in bulbwell in common condenser water return line	227 228	TB5- 1 TB5- 2
		Optional UCP Ambient Temp. Sensor (Ambient-Based CWR)	4RT6	Fresh air intake or north wall of building; discard remaining sensor from pair	127 128	1TB3-14 1TB3-15
		Optional UCP Condenser Refrigerant Temperature Sensor (SCP Cond. Limit or UCP Tracer Monitoring Package Option)	n/a	Epoxy to condenser refrigerant line between condenser and condenser/ economizer flange	127 128	1TB3-14 1TB3-15
SEN- 136	X13790038-02	UCP Evaporator Refrigerant Temperature Sensor	4RT5	Lower evaporator well	102A 103A	1TB3-12 1TB3-13
SEN- 137	X13790038-03	Oil (Sump) Temperature Sensor	4RT7	Oil sump well	110A 111A	1TB4-13 1TB4-14
		Optional "Inboard" Bearing Temperature Sensor	4RT8	Install in well (if present) in compressor-end oil return line, or epoxy to underside of line	133 134	1TB4-19 1TB4-20
		Optional "Outboard" Bearing Temperature Sensor	4RT9	Install in well (if present) in opposite-compressor-end oil return line, or epoxy to underside of line	135 136	1TB4-21 1TB4-22
SEN- 131 (Note 3)	X13790038-04	UCP Ent. Evaporator Water Temperature Sensor	4RT2	Insert in bulbwell in connecting water piping (water in)	121 122	1TB3- 3 1TB3- 4
		and UCP Lvg. Evaporator Water Temperature Sensor	4RT1	Insert in bulbwell in connecting water piping (water out)	104 105	1TB3- 1 1TB3- 2
		Optional UCP Ent. Condenser Water Temperature Sensor	4RT3	Insert in bulbwell in connecting water piping (water in)	123 124	1TB3- 5 1TB3- 6
		and Optional UCP Lvg. Condenser Water Temperature Sensor	4RT4	Insert in bulbwell in connecting water piping (water out)	125 126	1TB3- 7 1TB3- 8
		SCP System Chilled Water Temperature Sensor	n/a	Insert in bulbwell in common system chilled water line (to system load)	219 220	TB2- 3 TB2- 4
		and SCP System Return Water Temperature Sensor	n/a	Insert in bulbwell in common system return water line (from system load)	221 222	TB2- 5 TB2- 6

Notes:

1. Trane's mnemonic part number appears on the outside of the box containing the sensor(s); the vendor code number is stamped on the sensors.
2. Do not order this sensor to replace one of a matched sensor pair (e.g., entering and leaving water temperature sensors for the evaporator or condenser).
3. Ordering SEN-131 yields a matched pair of sensors. Sensors used as a matched pair must be replaced as a pair; do not replace an individual sensor from a pair!
4. Other components required to install each sensor are listed below (and identified in Figure 2):
   a. For SEN-131 and SEN-132 used for water temperature applications (4RT1 thru 4RT4):
      BUS-21, GRP-46 and WEL-48.
   b. For SEN-136 used for evaporator refrigerant temperature applications (4RT5):
      GRP-46 and WEL-49.
   c. For SEN-137 used for oil sump temperature applications (4RT7):
      GRP-46 and WEL-50 (CVHEs) or WEL-48 (CVHBs).
   d. For SEN-137 used for bearing temperature applications (4RT8, 4RT9), unless epoxied to oil return lines:
      BUS-6 and WEL-48.

Figure 3
UCP695 Sensor Locations

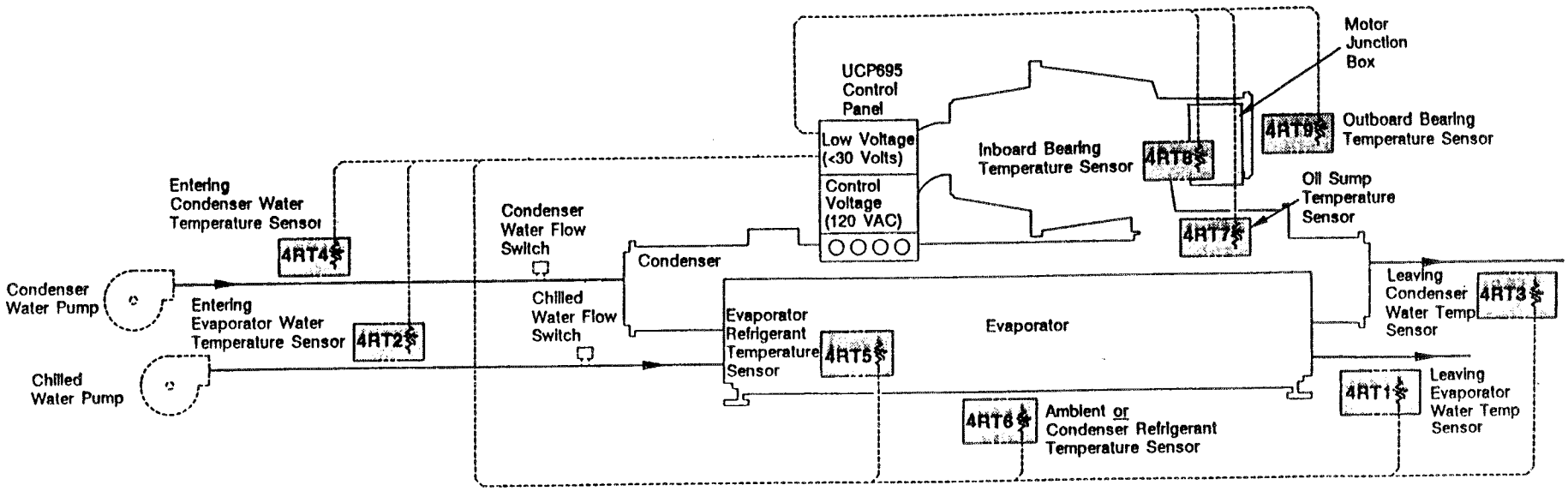

Notes:
1. See Tables 1 and 2 for additional sensor information.
2. For sensor installation instructions, refer to the installation manual that shipped with the chiller, or with the UCP695 retrofit kit, as applicable.

Sensor Selection—
"Old"-Style Sensors (Figure 1)

4RT1	=	SEN-113 (X13790002-02) or SEN-118 (X13790002-06)
4RT2	=	SEN-118 (X13790002-06)
4RT3	=	SEN-118 (X13790002-06)
4RT4	=	SEN-118 (X13790002-06)
4RT5	=	SEN- 96 (X13790002-03)
4RT6	=	SEN-113 (X13790002-02)
4RT7	=	SEN-114 (X13790002-05)
4RT8	=	SEN-114 (X13790002-05)
4RT9	=	SEN-114 (X13790002-05)

Sensor Selection—
"Current"-Style Sensors (Figure 2)

4RT1	=	SEN-132 (X13790038-01) or SEN-131 (X13790038-04)
4RT2	=	SEN-131 (X13790038-04)
4RT3	=	SEN-131 (X13790038-04)
4RT4	=	SEN-131 (X13790038-04)
4RT5	=	SEN-136 (X13790038-02)
4RT6	=	SEN-132 (X13790038-01)
4RT7	=	SEN-137 (X13790038-03)
4RT8	=	SEN-137 (X13790038-03)
4RT9	=	SEN-137 (X13790038-03)

Drwg. X39470473

Figure 4
SCP Sensor Locations (Typical 3-Chiller, Parallel-Piped, Decoupled System Shown)

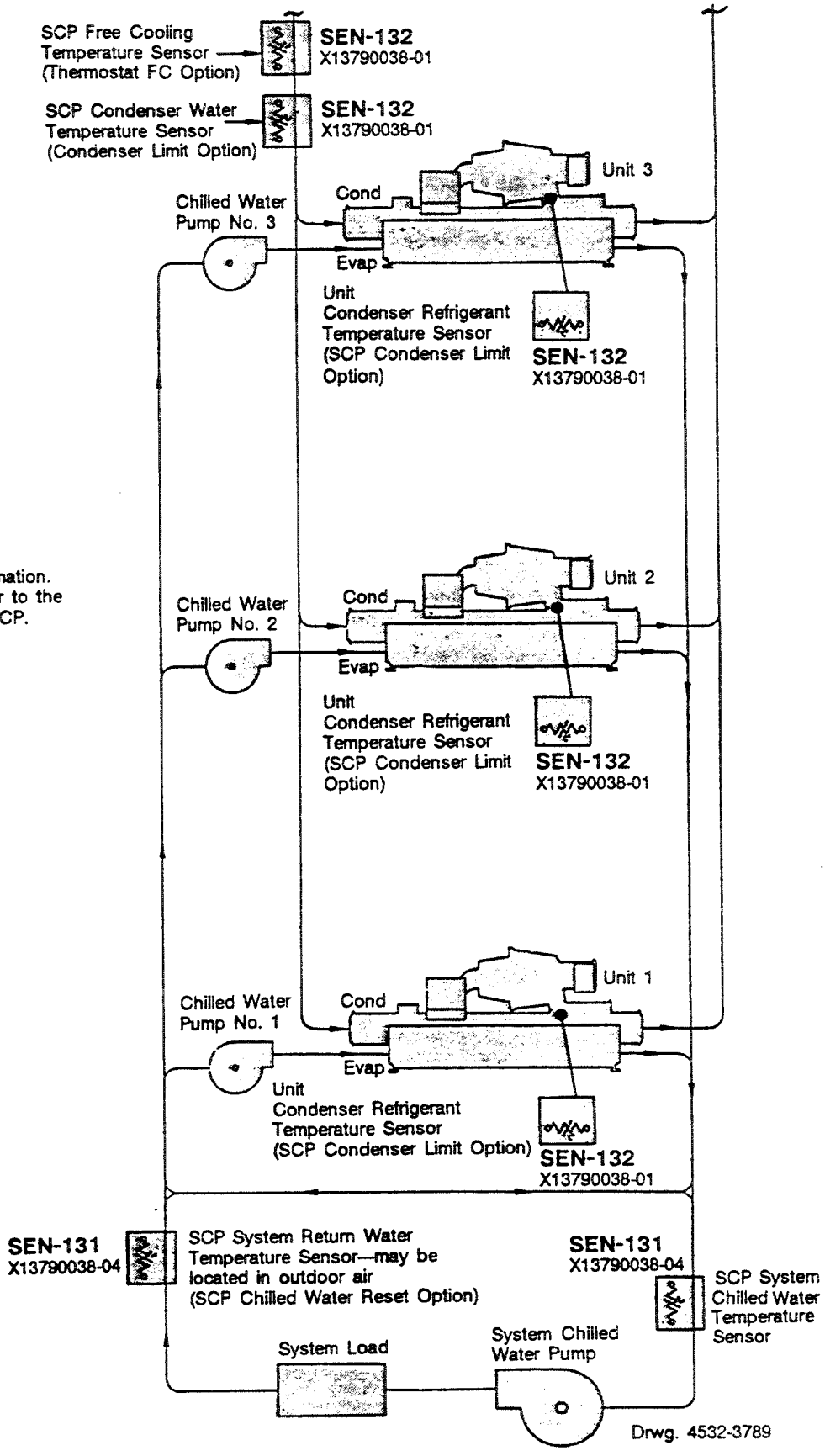

Notes:
1. See Table 2 for additional sensor information.
2. For sensor installation instructions, refer to the installation manual that shipped with the SCP.

Note: Sensor installation instructions are provided in the current editions of CVHE-IN-4, CVHB-IN-5, CVRA-IN-1 (UCP695 retrofit kit), and CVMA-IN-1 (SCP). However, there are a couple of important points to remember:

1. Evaporator Water Temperature Sensors. All CVHEs with UCP695 panels ship with the standard leaving evaporator water temperature sensor (SEN-113 or SEN-132), regardless of what other control options are ordered. Therefore, if either the chilled water reset (CWR) or matched-pair evaporator sensors are specified, the unit will ship with an extra evaporator water sensor.

If the chiller was ordered with the CWR option, install the extra sensor (i.e., the standard leaving evaporator sensor; SEN-113 or -132) in the outside air and wire it to the micro module's ambient temperature input. See Tables 1 and 2.

If the chiller was ordered with the matched-pair evaporator sensors but does not include CWR, discard the extra sensor (i.e., the standard evaporator sensor).

2. Extending Sensor Leads. The leads on current temperature sensors may not reach all the way back to the UCP or SCP. If this is true of your installation, route the sensor leads to a junction box mounted in a convenient location. Splice the sensor leads inside the junction box; then route the added length of wire back to the control panel in conduit. (Remember that jacketed cable can be cut to length.)

Note: To extend the leads of "new"- and "old"-style sensors, use 14-18 AWG, 600V wire. The wire added between the junction box and the control panel must be either shielded or run in conduit. If shielded cable is used, be sure to tape off the shield wire at the junction box and ground it at the control panel. If the wires added to extend the sensor leads will be run in conduit, do not run them in the same conduit with other circuits carrying 30 or more volts.

Caution: To prevent possible sensor malfunction due to electrical noise, never route low-voltage sensor leads with other conductors carrying 30 or more volts!

3. Matched-Pair Evaporator or Condenser Water Temperature Sensors. All of the water temperature sensors used in the UCP and SCP control systems are accurate to within ± 1.0 F, and are typically offered as "matched" pairs.

The term "matched sensor pair" indicates that both sensors in a given pair have the same accuracy. For example, a sensor that registers a temperature that is 0.5 F higher than the "actual" value is paired with another sensor that also registers 0.5 F high. If entering and leaving water temperature sensors are not replaced with another matched pair of sensors, the accuracy of the temperature readings displayed on the face of the control panel is reduced. (That is, if one sensor in a matched pair "reads" 1.0 F high and the other sensor "reads" 1.0 F low, the inaccuracy of the front panel display is 2.0 F.)

For further information on this product or other Trane products, refer to the "Trane Service Literature Catalog", ordering number IDX-IOM-1. This catalog contains listings and prices for all service literature sold by Trane. The catalog may be ordered by sending a $20.00 check to: The Trane Company, Service Literature Sales, 3600 Pammel Creek Road, La Crosse, WI 54601.

PRINTED BY PRODUCTION SERVICES — LA CROSSE BB/LW

TRANE™

General Service Bulletin

CVHE-SB-18

Library	Service Literature
Product Section	Refrigeration
Product	Centrifugal Liquid Chillers
Model	CVHE
Literature Type	General Service Bulletin
Sequence	18
Date	12/9/87
File No.	SV-RF-CTV-CVHE-SB-18-1287
Supersedes	

Subject: CVHE Vibration Analysis and Trim Balance Procedures

Introduction:

This service bulletin outlines the proper method for checking vibration levels on Model CVHE CenTraVacs, and also describes the appropriate corrective action to take if vibration levels are excessive.

Discussion:

The information presented in this bulletin is divided into 3 sections; a brief summary of the topics covered in each of these sections is provided below:

Section 1: Routine Vibration Analysis

This section describes 2 types of vibration analysis that can be performed routinely to evaluate (1) thrust bearing condition, and (2) rotational imbalance. It also outlines the procedures and types of equipment to use when conducting these vibration checks.

Section 2: Checking Vibration After Unit Disassembly or Compressor Rework

Outlined here are procedures for checking vibration levels following: (1) suction elbow removal; (2) removal of the entire compressor/motor assembly; and, (3) disassembly of any portion of the compressor's rotating assembly.

Section 3: Trim Balancing

Included in this section is a brief summary of how the trim balancing process is used to reduce excessive compressor vibration.

While excessive vibration levels can be caused by worn bearings—or when components in the compressor's rotating assembly are out of alignment, it most often results if the additive imbalance of the individual, prebalanced components exceeds the allowable imbalance for the entire rotating assembly. This is evidenced by the fact that approximately 10% of all CVHE compressors built today require trim balancing before leaving the factory. (All CVHE compressors are factory-analyzed for vibration.)

Since The Trane Company has a policy of continuous product improvement, it reserves the right to change specifications and design without notice. The installation and servicing of the equipment referred to in this booklet should be done by qualified, experienced technicians.

Section 1:

Routine Vibration Analysis

Though not required for proper, routine unit maintenance, 2 types of vibration analysis can be performed on CVHE-style compressors; one type of analysis is used to ascertain the condition of the thrust (outboard) bearing, while the other checks for rotational imbalance. Both types of vibration analysis (described below) can be incorporated into the chiller's periodic maintenance program or "service contract" terms.

Analyzing Thrust Bearing Condition

The thrust (or "outboard") bearing used in CVHE compressors is an antifriction-type, "duplex" ball bearing. As a result, the classic oil analysis program—successfully used to evaluate the condition of the babbitted inboard bearing—does not indicate the condition of the thrust bearing.

"Audio" Check. The simplest, least expensive method of checking for thrust bearing failure is to listen to the bearing during operation and coastdown. A failed bearing will "howl" while the unit is running and "click" during coastdown. While the howling noise is readily apparent, the best way to listen for "clicking" during coastdown is to place a stethoscope against the thrust bearing inspection cover; the "clicking" sound will be most noticeable just before the rotor stops turning.

Note: Stethoscopes for listening to machine noise are commonly available from automotive supply stores. If necessary, a screwdriver can be used in lieu of a stethoscope: simply place the tip of the screwdriver against the inspection cover; then press your ear lightly against the handle.

If the "audio" method of bearing evaluation indicates that a thrust bearing is bad, the bearing will usually continue to be operable for several months before failing.

* * * * *

"Mechanical" Check. An alternative method for determining thrust bearing quality is to monitor bearing condition with a "bearing-gear" analyzer. We tested several popular makes of this type of vibration analyzer on good bearings as well as on bearings with "manufactured" defects. Though none of the analyzer makes tested provided an obvious signal of a failed bearing in all cases, the "SWAN-1 Bearing/Gear Analyzer" yielded the best results and is considered acceptable for use as a routine diagnostic tool.

Important! While vibration analyzer readings indicating high vibration levels (i.e., over 40,000 SWE on a SWAN analyzer) may be symptomatic of a potential bearing problem, do not change out the thrust bearing unless the audible symptoms described above are also present!

SWAN-1 Bearing/Gear Analyzer

During our evaluation of the SWAN analyzer, we obtained vibration readings from a variety of locations on the motor. Based on this experience, the optimum location for monitoring thrust bearing condition is on the outboard bearing inspection cover in the radial direction. See Figure 1. (Though this location yields the best results with the SWAN analyzer, be sure to follow the instructions provided by the manufacturer for the bearing-gear analyzer you are using.)

It is difficult to specifically define "good" and "bad" readings for bearing/gear analyzers like the SWAN; bearings of identical quality in similar units may well show different levels of "stress wave" output. Most commonly, this type of analyzer is used to monitor the change in a bearing's quality over its entire life.

To correctly monitor a thrust bearing, it is important to record a vibration reading while the bearing is fairly new; this establishes a "base line" vibration level that can be used for comparison with future vibration level checks. Note that it is important for the unit to be operating at similar conditions each time bearing condition is checked; for this reason, it is advisable to record vibration level readings at various operating load points.

Once the "base line" is established, use a bearing/gear analyzer to periodically check bearing deterioration.

Note: While there are undoubtedly other types of vibration analyzers that can be used to indicate thrust bearing degradation, the SWAN analyzer yielded the best results in our laboratory tests. For more information about the "SWAN-1 Bearing/Gear Analyzer", phone or write to this address:

DIAGNOSTIC EQUIPMENT DEVELOPMENT, INC.
6699 N.E. 7th Avenue
Boca Raton, Florida 33431

Phone: (305) 994-1543

The Trane Company
La Crosse, Wisconsin 54601-7599
Printed in U.S.A.

©American Standard Inc. 1987

Figure 1
Checking Thrust Bearing Quality
with a SWAN-1 Bearing/Gear Analyzer

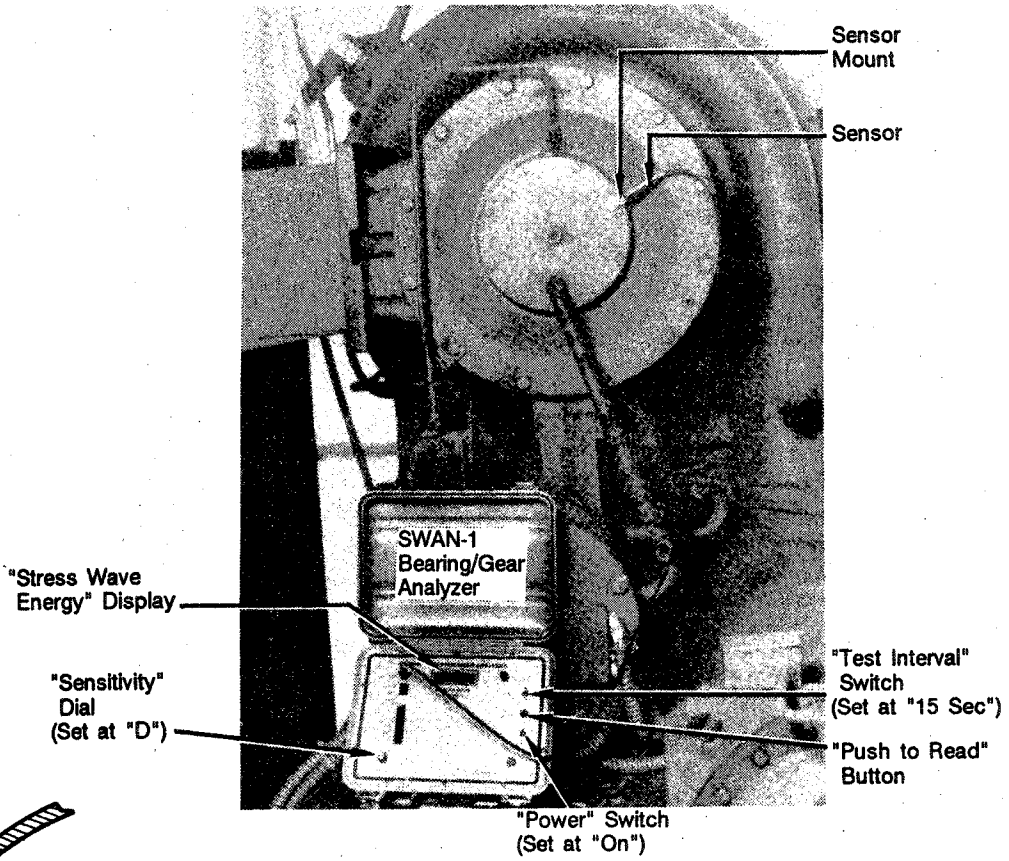

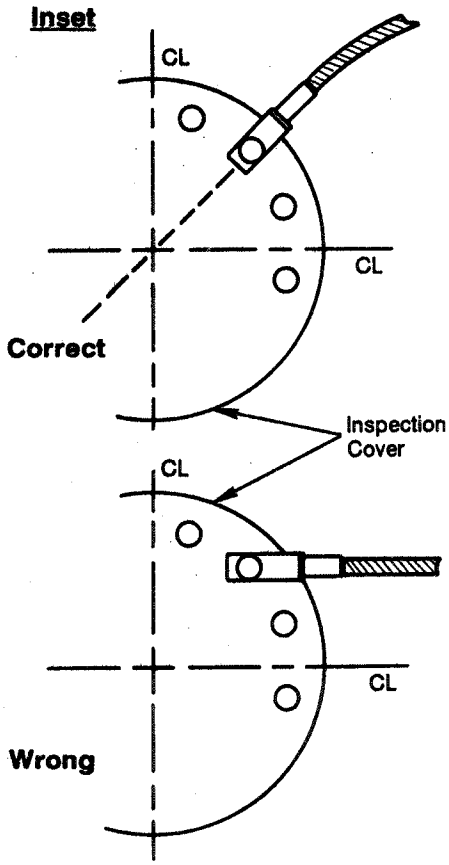

Instructions:

1. Drill a 13/32"-diameter clearance hole in the sensor mount (i.e., to accommodate the 3/8" bolt on the thrust bearing inspection cover).

2. Clean the following to ensure that they are free of dust, paint and metal chips:
(a) the sensor base and the threads of its 10-32 mounting screw; and,
(b) the sensor mount's surface and its 10-32 tapped hole.

3. With the brass washer in place, screw the sensor onto the sensor mount and hand-tighten.

4. Tighten the sensor to 30-35 inch-pounds (1.8-2.0 nm) using a torque wrench and a 5/8"-deep well socket.

5. Loosen the bolt at the 2 o'clock position on the thrust bearing inspection cover; then slide the sensor mount into place. Make sure that the sensor is positioned perpendicular to the center line of the shaft (see inset). Retighten the bolt to its normal torque.

6. Plug the end of the sensor cable into the input jack on the SWAN-1 analyzer.

7. Ensure that the "Test Interval" toggle switch is set at "15 Sec", and that the "Sensitivity" dial is set at "D".

8. Flip the "Power" toggle switch to "On"; then press the "Push to Read" button to activate the digital display. Note that the numbers appearing on the display will stop changing after 15 seconds; this is the cumulative "Stress Wave Energy" (SWE) value. The analyzer will continue to update the SWE value at 15-second intervals.

9. Record at least 10 consecutive SWE readings. If the recorded values consistently increase or decrease, continue to log SWE readings until the trend reverses or disappears.

10. To arrive at a final SWE value, compute the average of all the recorded readings; then round off the result to 2 significant figures. Compare the final SWE value against the general guidelines below; keep in mind that the ranges indicated are necessarily broad because of the variance between base line SWE values from one chiller to the next.

0 to 20,000 SWE ("D" sensitivity):	Typical at Initial Start-Up
20,000 to 40,000 SWE ("D" sensitivity):	"Normal" Thrust Bearing Wear
Over 40,000 SWE ("D" sensitivity):	Thrust Bearing Replacement May Be Indicated

Analyzing Rotational Imbalance

Measurements associated with this check not only verify that alignment of the compressor's rotating assembly did not shift during shipment and installation, but also establish "base line" readings that can be used for comparison with future rotational imbalance measurements. The best time to begin vibration analysis for trend logging purposes is at initial start-up.

Normally, rotational imbalance does not change once the unit is in operation; however, compressor rework can change the level of imbalance, just as worn motor bearings can sometimes magnify rotational imbalance.

Equipment Requirements. Our factory uses a "Scientific Atlanta Model 2521 Tracking Vibration Recorder" to analyze compressor rotation imbalance, though any one of a number of popular vibration analyzers can be used for this purpose. Just make sure that the analyzer you elect to use includes these features:

a. Battery-Powered Operation. Battery-powered meter operation is convenient for those job sites where building power is inaccessible. More importantly, though, this feature eliminates the erroneous vibration measurements that can be produced if an electrical ground loop exists.

An "electrical ground loop" is an undesirable current flow that results when the ground potentials of 2 circuits differ. For example, an electrical ground loop may occur if the ground potential of a vibration analyzer plugged into a 115 VAC power supply differs from that of the chiller.

b. Analyzer Pickup Probe. To obtain consistent vibration readings in velocity ("in/sec peak") at high frequencies (over 1000 Hz), the meter must include an accelerometer with a magnetized base.

c. Scale. Make sure that the analyzer selected has a full-scale deflection sensitivity of 0.0 to 0.2 in/sec peak, minimum. To eliminate over-range plots and allow the user to monitor 2 frequency ranges (0-150 Hz and 0-1500 Hz), the meter scale and frequency ranges must be field-selectable, too.

Note: If an analyzer with the features described in "C" is not available, use an instrument that measures displacement (mils) and includes a tuneable filter (allowing the operator to adjust the meter to a specific frequency).

d. Output. To simplify measurement recording and analysis, the vibration meter used should produce a hard-copy, X-Y plot of velocity (in/sec) versus frequency (Hz).

* * * * *

Vibration Pickup Points. Rotational imbalance is indicated by the degree of horizontal and vertical vibration, and is always measured at the outboard end of the motor. Specific locations or "pickup points" for accelerometer placement are illustrated in Figure 2.

Before placing the accelerometer on the motor, remove all insulation, glue and excess paint from the surface of the bearing bracket at each "pickup point". To assure accelerometer stability and reading accuracy: (1) make sure that the surfaces of the vibration "pickup points" are smooth and clean; and, (2) position the accelerometer so that its magnetized legs are parallel to the rotor shaft.

When measuring horizontal and vertical vibration, tune the analyzer to the vibration peak at running speed (60 Hz) and at twice running speed (120 Hz). If the vibration analyzer generates a hard-copy report, use the low frequency scale (or the scale that covers the 0-150 Hz range) for these readings.

Figure 2
Measuring Vertical and Horizontal Vibration
(Scientific Atlanta Model 2521 Tracking Vibration Recorder)

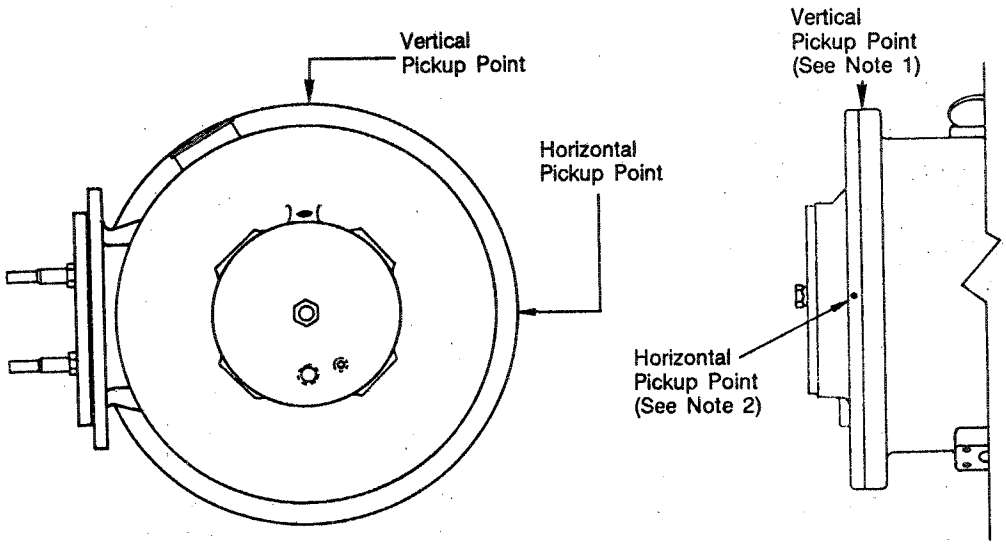

Notes:
1. Vertical Vibration Measurement. Place the vibration analyzer pickup probe on the vertical axis of the outboard bearing bracket. Be sure to position the magnetized legs of the probe parallel to the rotor shaft to prevent rocking during vibration measurement.
2. Horizontal Vibration Measurement. Place the vibration analyzer pickup probe on the horizontal axis of the outboard bearing bracket. Be sure to position the magnetized legs of the probe parallel to the rotor shaft to prevent rocking during vibration measurement.

To determine whether or not compressor rotational imbalance falls within acceptable limits, compare the actual horizontal and vertical measurements obtained with the values shown in Table 1. Notice that this table indicates the maximum allowable horizontal/vertical vibration levels for 3 different unit configurations: (1) an air-run compressor (without the elbow); (2) an air-run unit (complete chiller without refrigerant); and, (3) a Freon-run unit (complete chiller with refrigerant). While the same pickup points are used for each of these variations, notice that the allowable vibration limits change from one configuration to the next.

* * * * *

For additional information about the "Scientific Atlanta Model 2521 Tracking Vibration Recorder", phone or write to this address:

SCIENTIFIC ATLANTA,
DYMAC Division
P.O. Box 23575
San Diego, California 92123-0575

(619) 268-7113

Table 1
Maximum Allowable Horizontal and Vertical Vibration Levels at 60 Hz

Unit "Configuration"	Horizontal or Vertical Velocity at 60 Hz (Filtered)
Air-Run Compressor (w/o Suction Elbow)	0.10 in/sec peak
Air-Run Chiller (complete unit w/o refrigerant)	0.15 in/sec peak
Freon-Run Chiller (complete unit w/refrigerant)	0.25 in/sec peak

Section 2:
Checking Vibration After Unit Disassembly or Compressor Rework

Check the vibration level of the chiller when it is restarted following:

a. suction elbow removal;
b. removal of the entire motor/compressor assembly; or,
c. disassembly of any portion of the compressor's rotating assembly.

In all cases (where it is easy to do so), check the unit's vibration level before teardown. This provides a "base line" measurement that can be compared to the vibration level recorded after rework is completed.

Suction Elbow Removal

For those teardowns that require removal of the suction elbow---but the compressor is neither removed nor rebuilt, use the procedure outlined below to reinstall the elbow.

1. Set the elbow on the evaporator flange; then align it with the suction cover without using guide pins.

2. Insert 2 bolts through the suction cover flange at the 3 o'clock and 9 o'clock positions. Tighten both bolts enough to draw the elbow flush with the suction cover.

3. Install the evaporator flange bolts. Do not use pry bars or guide pins to align the bolt holes!

4. Using the appropriate bolt-tightening sequence, tighten the evaporator flange bolts to the specified torque.

5. Loosen the 2 bolts installed in the suction cover in Step 2, and watch for compressor-to-suction-elbow movement. Normally, the compressor will lift slightly when these bolts are loosened.

Inspect the gap between the suction elbow and suction cover. The width of this gap should be the same around the entire circumference of the joint. If the gap is uneven, note where the widest and narrowest widths are located.

Note: If the vibration levels recorded when the assembled unit is air-run exceed the maximum levels allowable (Table 1), it may be necessary to equalize this gap by realigning the elbow (where possible).

6. Install the bolts in the suction cover flange and tighten them to the specified torque; be sure to follow the appropriate bolt-tightening sequence.

7. Air-run the assembled unit; to do this, complete Steps 7a through 7f.

Caution: To prevent possible equipment damage when the compressor is air-run (with or without the suction elbow), exercise these precautions:
[ ] Lock the inlet guide vanes in the closed position.
[ ] Disable the transition circuit so that the starter cannot transition.
[ ] Isolate the water flows through the chiller to prevent condensate from forming on the tubes.
[ ] Do not start the compressor motor more than 5 times (3 times for across-the-line starters) without refrigerant cooling. After the 5th start (3rd start for across-the-line starters), allow the motor to cool down for at least 24 hours.

a. Lock the inlet guide vanes in the closed position.

b. Isolate the chilled water and condenser water flows so that condensation does not form on the tubes. (To enable the unit to run, the "proof-of-flow" circuits must be jumpered.)

c. Units w/Reduced-Voltage Starters Only. Disable the transition circuit to prevent the unit from running in the delta formation. The steps required to do this on "A"- through "J"-design CVHEs with classic control panels are shown in Figure 3; for "K"- and later-design CVHEs with UCP695 control panels, see Figure 4.

d. Start the chiller and run it for 10 minutes before recording any vibration readings. During this "warm-up" period, monitor the unit's vibration level with a vibration analyzer set up for running speed (i.e., 60 Hz or 3600 rpm).

If the vibration level is excessive (i.e., exceeds 0.25 in/sec peak), shut down the compressor and prepare it for trim balancing.

e. Once the 10-minute "warm-up" period expires, take a complete set of vibration readings.

Note: If the vertical vibration is high---but all other readings are acceptable, loosen the motor support bracket (Figure 5) and retake both the vertical and horizontal vibration measurements. If the new vibration levels registered are higher than before, retighten the motor support bracket bolts; if the new measurements are lower, discard these bolts.

f. Shut down the compressor; then compare the horizontal and vertical vibration readings obtained with the allowable vibration levels shown in Table 1 for an air-run chiller.

If the actual vibration levels recorded are acceptable, evacuate the unit and charge it with refrigerant. However, if unit vibration exceeds the values shown in Table 1, realign the suction elbow.

Removal of the Entire Motor/Compressor Assembly

Occasionally, limited access at a job site makes it necessary to remove the entire motor/compressor assembly from the chiller before the unit can be installed. In this situation, it is important to dowel the motor/compressor assembly before it is removed from the shells to prevent the compressor components from shifting during the rigging process.

Normally, the "compressor removal for unit installation" requirement is known before the unit is ordered, making it possible to specify optional factory-dowelling. However, if field-dowelling is necessary, be sure to review the compressor dowelling instructions described in Trane General Service Bulletin CVHE-SB-10.

When the chiller is reassembled (i.e., the motor/compressor assembly is set on the shells), careful alignment of the discharge flange and compressor foot is of critical importance since it determines suction elbow alignment, as well. (Follow the elbow alignment procedure described under "Suction Elbow Removal" in Section 2 of this bulletin.)

Figure 3
Air-Running a CVHE w/"Classic" Control Panel in the "Wye" Configuration

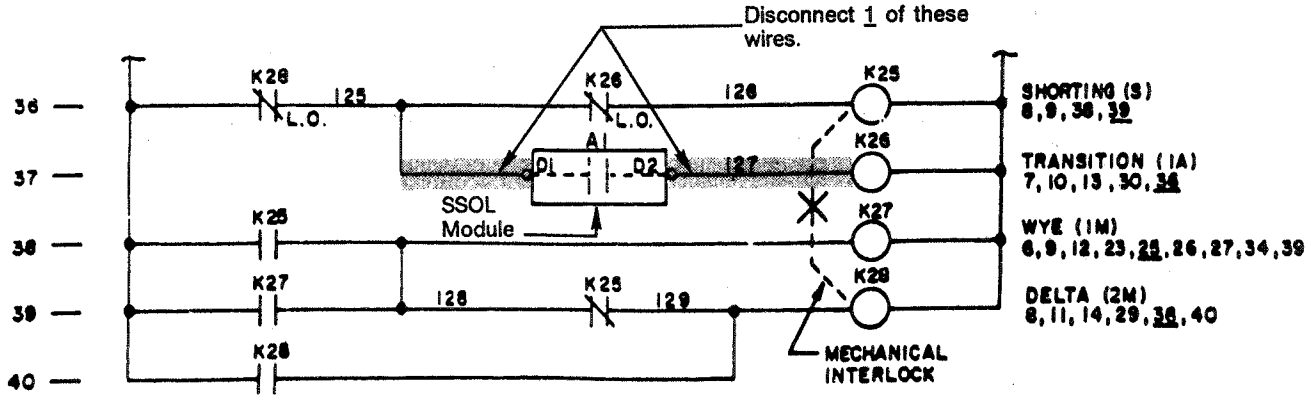

WARNING!
Disconnect electrical power supply to prevent injury or death due to electrical shock.

Step 1
Deactivate the starter panel's "transition" circuit. To do this, locate SSOL module A1 in the starter panel and remove Wire No. 125 from Terminal D1 (or remove Wire No.127 from Terminal D2).

Insulate the end of the disconnected wire with black electrician's tape.

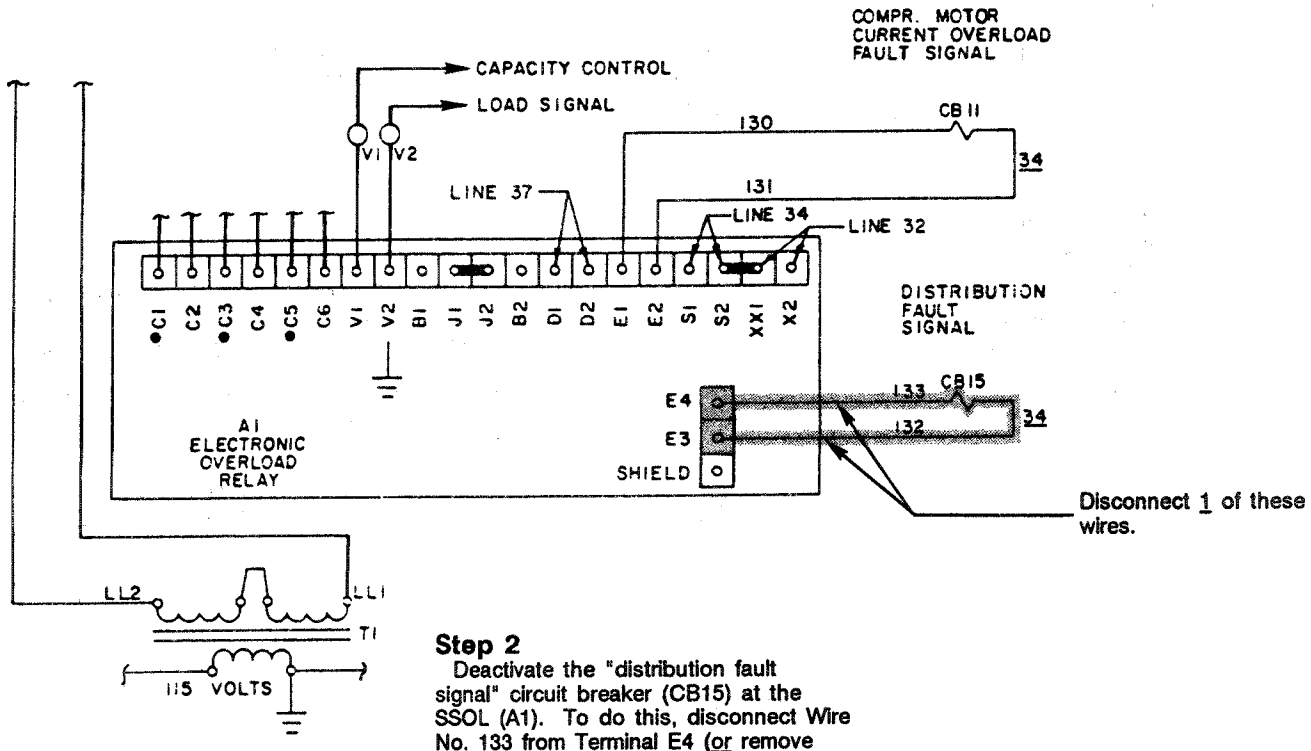

Step 2
Deactivate the "distribution fault signal" circuit breaker (CB15) at the SSOL (A1). To do this, disconnect Wire No. 133 from Terminal E4 (or remove Wire No. 132 from Terminal E3).

Insulate the end of the disconnected wire with black electrician's tape.

Figure 4
Air-Running a CVHE w/UCP695 Control Panel in the "Wye" Configuration

Step 1

Disconnect Wires 131B and 132B from micro module Terminals 1TB4-5 and -6, respectively. Wrap the exposed end of each lead with electrician's tape

WARNING!
Disconnect electrical power supply to prevent injury or death due to electrical shock.

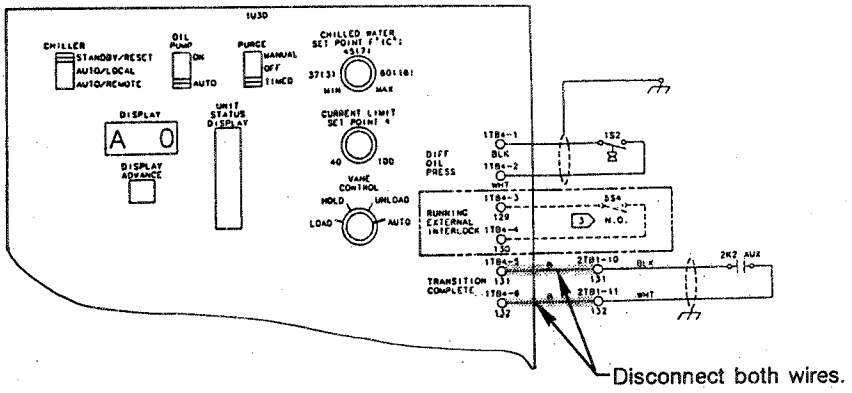

Step 2

Disconnect Wires 10C and 12A from Terminals 1TB2-5 and -6 in the UCP. Insulate the free end of each wire with electrician's tape.

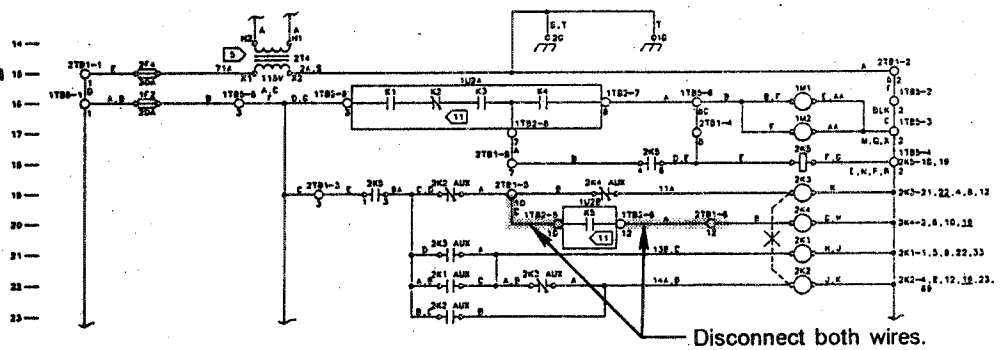

Step 3

Connect Terminals 1TB4-5 to 1TB2-5, and 1TB4-6 to 1TB2-6. Use #14 AWG, 600V copper wire.

Note: These connections prevent the starter from "transitioning" the compressor motor into the "delta" configuration.

Caution!
Exercise extreme care when connecting the 1TB4 terminals in the low-voltage (<30V) section of the UCP to the 1TB2 terminals in the 115V section. Improper connections in these temporary circuits can result in fatal damage to micro module 1U3.

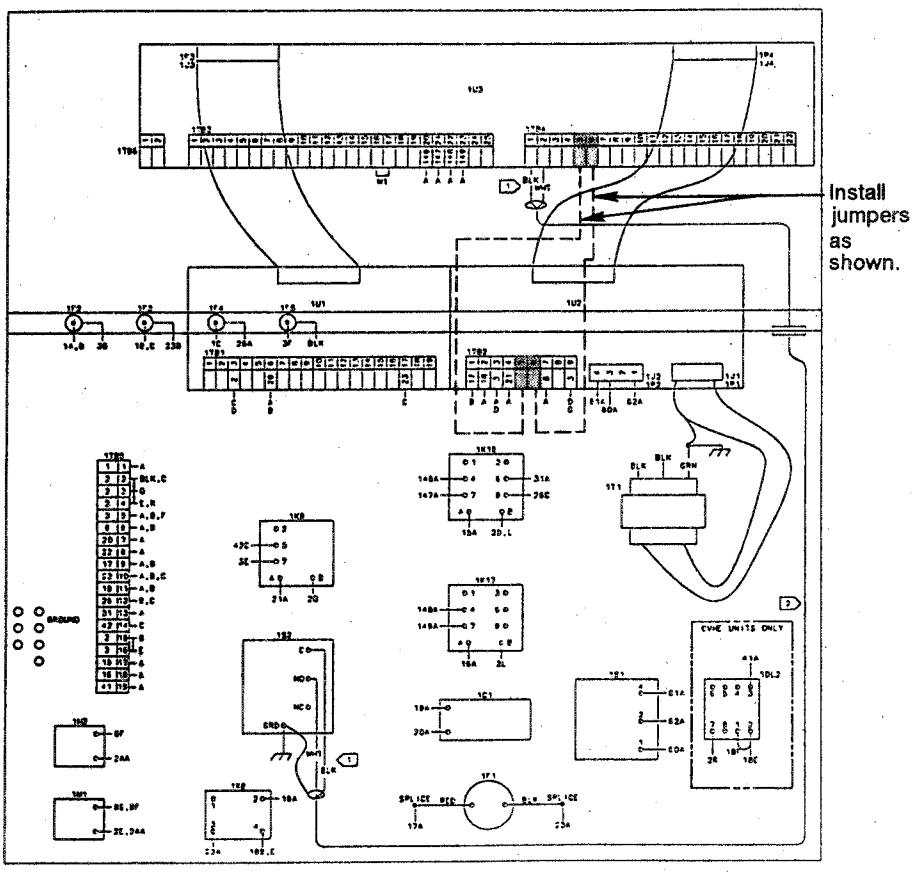

Figure 5
Motor Support Bracket Location
(Back View of Unit)

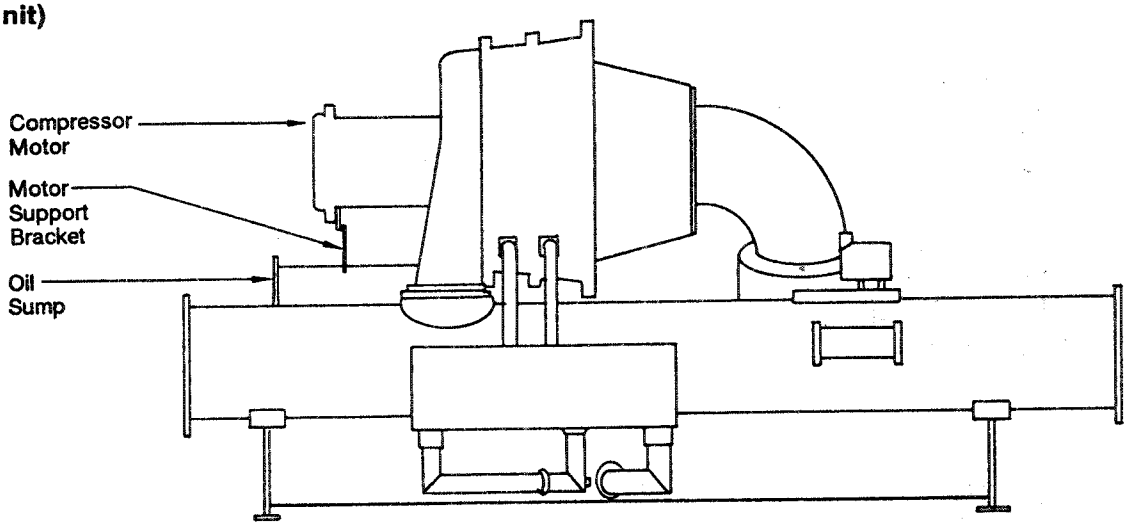

Compressor Disassembly

Whenever the compressor must be disassembled for any reason, be sure to comply with the recommendations outlined below.

1. After removing the suction elbow and inlet guide vanes, examine the nut on the end of the compressor shaft. If the nut is a "trim balance" nut (see Figure 6), record the locations of the balance weights with respect to the keyway before removing the nut.

2. Complete the compressor teardown. During the teardown process, be sure to mark each component to indicate its relative position on the shaft.

3. Reassemble the compressor; follow the standard procedures described in the CVHE service guide (CTV-SG-2).

Important! As you install each impeller on the shaft, make sure that the keyway is facing up; this is especially important when the first-stage impeller is installed. The keyway must face up when the shaft nut is tightened.

Note: If the shaft nut is actually a "trim balance" nut, a couple of additional steps must be performed as the compressor is reassembled:

a. If none of the rotating assembly components were replaced, reinstall the trim balance nut so that the balancing weights are in their original positions (before the nut was removed) with respect to the keyway.

b. If any of the rotating assembly components were replaced, record the locations of the balancing weights in the nut; also, label each weight so that it can be replaced if necessary. Then, remove the balancing weights from the trim balance nut before reinstalling it on the shaft. (Imbalance problems are likely to occur if weights are added to the trim balance nut at this time.) Note that a standard, nonbalancing nut can be substituted for the trim balance nut in this situation.

4. Continue the standard rebuild procedure, including reinstallation of the inlet guide vanes. After the vanes are installed, air-run the compressor and monitor its vibration levels before reinstalling the suction elbow. (To air-run the compressor, see Step 7 of "Suction Elbow Removal" in Section 2 of this bulletin.)

Caution: To prevent possible equipment damage when the compressor is air-run (with or without the suction elbow), exercise these precautions:
[ ] Lock the inlet guide vanes in the closed position.
[ ] Disable the transition circuit so that the starter cannot transition.
[ ] Isolate the water flows through the chiller to prevent condensate from forming on the tubes.
[ ] Do not start the compressor motor more than 5 times (3 times for across-the-line starters) without refrigerant cooling. After the 5th start (3rd start for across-the-line starters), allow the motor to cool down for at least 24 hours.

Figure 6
Typical Trim Balance Nut
(Face of Nut Shown)

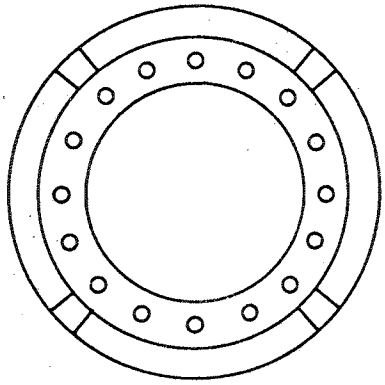

Note: The holes around the face of the trim balance nut are threaded. Several balance weights (i.e., bolts and washers) are installed in each trim balance nut, as shipped.

5. Compare the horizontal and vertical vibration measurements obtained in Step 4 with the allowable vibration levels listed in Table 1 for an air-run compressor.

If the levels of vibration are acceptable, reinstall the suction elbow on the unit. (Follow the instructions provided under "Suction Elbow Removal" in Section 2 of this bulletin.)

If unit vibration is not acceptable—and the compressor does not have a trim balance nut, the unit must be trim balanced. (See "Section 3: Trim Balancing" in this bulletin.)

If the compressor vibration measurements observed in Step 4 are unacceptable—but the unit does include a trim balance nut, reinstall the balance weights (removed in Step 3) at their original positions in the trim nut. Air-run the compressor again and check the vibration levels. If vibration still exceeds the maximum levels allowable, the compressor must be trim balanced. (See "Section 3: Trim Balancing".)

Note: If the horizontal and vertical vibration levels recorded following thrust bearing replacement are excessive, do not schedule the unit for trim balancing without first redoing the bearing installation and checking the amount of vibration that results.

Section 3:
Trim Balancing

Whenever any of the recommended vibration analyses described in this bulletin indicate an excessive amount of vibration, the compressor's entire rotating assembly must be balanced. Trim balancing a unit in the field requires a substantial investment in expensive vibration analysis equipment. The portable vibration analyzers typically used for fan balancing are usually unsuitable for balancing a CVHE compressor; they are not designed to provide the shaft orbit measurements that are critical for proper compressor balancing.

La Crosse service personnel use a Bentley Nevada Model DVF2 (plus supporting equipment) to trim balance CVHEs since it provides the sensitivity and features necessary for proper trim balancing. To trim balance the compressor, phase angle and the orbit of the compressor rotor shaft are tracked by noncontact "proximity" probes during initial and trial weight runs. (Because the probes must monitor a smooth surface, the standard shaft nut is replaced with a special trim balance nut.) Data recorded during these runs is then fed into a single-plane balance program that determines the amount of weight required at specific locations to balance the assembly.

* * * * *

Note: Occasionally, high compressor vibration levels can be reduced without trim balancing. If the rotational vibration analysis indicates a high level of vertical vibration, locate the shipping support bracket (Figure 5) mounted between the end of the motor and the oil sump; then loosen the 2 bolts that secure this bracket to the motor. If the vibration level improves, discard the 2 bolts.

A worn thrust bearing can also be responsible for excessive vibration. If no rework has been done on the unit to date and it goes out of balance after operating normally, try replacing the thrust bearing before scheduling the unit for trim balancing.

For further information on this product or other Trane products, refer to the "Trane Service Literature Catalog", ordering number IDX-IOM-1. This catalog contains listings and prices for all service literature sold by Trane. The catalog may be ordered by sending a $20.00 check to: The Trane Company, Service Literature Sales, 3600 Pammel Creek Road, La Crosse, WI 54601.

PRINTED BY PRODUCTION SERVICES — LA CROSSE BB/LW

TRANE

General Service Bulletin

CVHE-SB-20A

Library	Service Literature
Product Section	Refrigeration
Product	Centrifugal Liquid Chillers, Water-Cooled
Model	CVHE
Literature Type	General Service Bulletin
Sequence	20A
Date	4/15/88
File No.	SV-RF-CTV-CVHE-SB-20A-488
Supersedes	CVHE-SB-20 (12/87)

Literature Changes:
CVHE-SB-20: Original issue of service bulletin.
CVHE-SB-20A: Corrected representation of TDR contacts in Figure 2 (Line 27) and Figure 3 (Line 24).

Subject: CVHE Oil Pressure Loss during Start-Up

Introduction:

Under certain conditions, a CVHE unit will trip on "low oil pressure" during the chiller's start sequence. This can be a nuisance for the owner/operator since a manual reset is required to resume operation. This bulletin describes the condition that prompts a nuisance "low oil pressure" trip during start-up, and recommends corrective action that will prevent this type of trip from recurring.

Discussion:

During each chiller "off" cycle, refrigerant migrates into the oil sump until an oil-refrigerant equilibrium is established at sump temperature and unit pressure. When the unit cycles on again, oil pump operation is initiated as the chiller progresses through its start sequence. With the oil pump running, oil pressure gradually increases to the "cut-in" value (15 psig) of the oil pressure differential switch. (Remember that this control "monitors" the difference between the refrigerant pressures in the oil sump and at the oil pump discharge.) Closure of this switch indicates that sufficient oil pressure exists; the unit control panel then issues a "start" signal to the starter panel to initiate compressor operation.

Because the oil sump is vented to the cavity between the first-stage inlet vanes and the first-stage impeller (i.e., lowest pressure in the unit), sump pressure drops dramatically as soon as compressor rotation begins. This pressure drop creates a new equilibrium point for the oil-refrigerant mixture in the oil sump. At the new equilibrium, the oil is unable to absorb as much refrigerant; this induces the excess refrigerant to vaporize, which—in turn—causes the oil to foam.

The oil pump continues to pump the now foaming oil. However, since the oil is discharged from the pump at a pressure higher than that existing in the sump, the refrigerant vapor trapped in the oil liquefies. When this change of state occurs, the volume of the oil-refrigerant mixture decreases significantly, and the pressure drop that accompanies this phenomenon can be severe enough to trip the unit's low oil pressure safety.

Since The Trane Company has a policy of continuous product improvement, it reserves the right to change specifications and design without notice. The installation and servicing of the equipment referred to in this booklet should be done by qualified, experienced technicians.

Units Affected:

All CVHE units of "A" through "L" designs are vulnerable to this nuisance "low oil pressure" condition during start-up. CVHE's of "M" and subsequent designs include a time delay relay and solenoid valve that temporarily reduces the amount of oil sump venting during the chiller start sequence. This prevents the loss of oil pressure that can occur during start-up by isolating the oil sump from the low-pressure cavity at the opposite end of the sump vent line.

Note: To determine the design sequence of a particular unit, check the 10th digit of the model number stamped on the chiller nameplate.

Corrective Action:

Add a solenoid vent-line valve and time delay relay to any "A"- through "L"-design CVHE application that is troubled by nuisance tripping of the low oil pressure control. Figure 1 indicates the installation location for the solenoid valve; notice that the direction of flow is from the oil tank to the suction cover. Figures 2 and 3 show the necessary wiring connections for "old"-style and UCP695 control panels.

Once installed and properly wired, the time delay relay will energize whenever the unit control panel issues a "start" signal to the starter panel. Once this time delay relay energizes, it will close the normally-open, solenoid vent-line valve for a period of approximately 2 minutes. After the 2-minute timing period expires, the solenoid valve will open completely, allowing full flow through the sump vent line during normal machine operation.

Note: The solenoid vent-line valve assembly includes a manual lift-stem accessory that must be field-adjusted to allow some venting of the oil tank to occur during the 2-minute time delay period. Use the following procedure to properly adjust the valve's manual lift-stem:

1. Turn the manual lift-stem screw (on the bottom of the valve assembly) counterclockwise as far as possible.

2. Electrically energize the solenoid valve to close it; then apply a small amount of air pressure (i.e., approximately 2-3 psig) to the inlet side of the solenoid valve.

3. Turn the adjusting stem clockwise until the valve just begins to allow air to bleed through it. At this point, mark the stem position in relationship to the valve body.

4. Once the "bleed-through" point described in Step 3 is established and marked, turn the adjusting stem an additional 1/4-turn clockwise. This final adjustment will unseat the valve far enough to allow some venting to occur during the initial 2-minute timing period.

Once the solenoid vent-line valve is properly set up, no further field adjustment is necessary.

Parts Ordering Information:

One solenoid vent-line valve, 1 time delay relay and 1 relay base are required for each affected CVHE unit; see Figure 4. Order these parts from La Crosse, "Ship from 31", and specify the part numbers identified below:

RLY-1102 = Time Delay Relay (1 required)
PLU-0172 = Plug-in Base for Relay (1 required)
VAL-2690 = Solenoid Valve (1 required)

The Trane Company
La Crosse, Wisconsin 54601-7599
Printed in U.S.A.

©American Standard Inc. 1988

Figure 1
Installation Site for Solenoid Valve
(Back of Unit Shown)

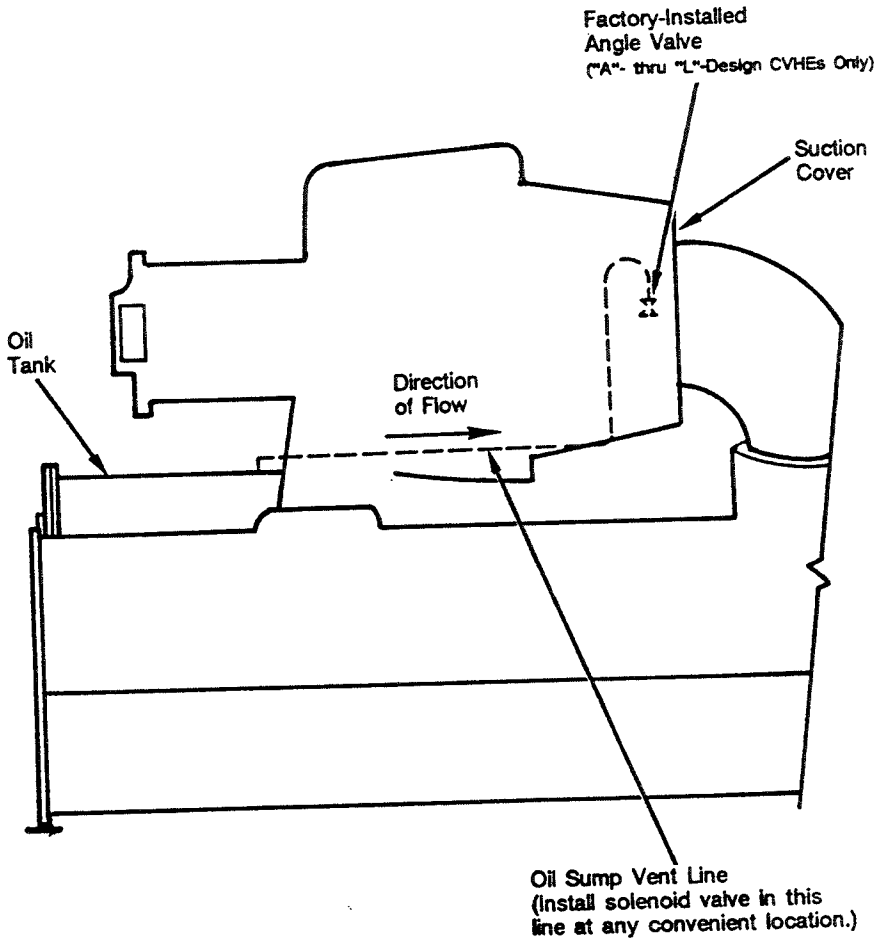

Figure 2
Wiring Connections Required
for "Old"-Style CVHE Control Panels
("A"- thru "J"-Design CVHEs)

WARNING
DISCONNECT ELECTRICAL POWER SOURCE TO PREVENT INJURY OR DEATH FROM ELECTRICAL SHOCK

CAUTION
Use copper conductors only to prevent equipment damage

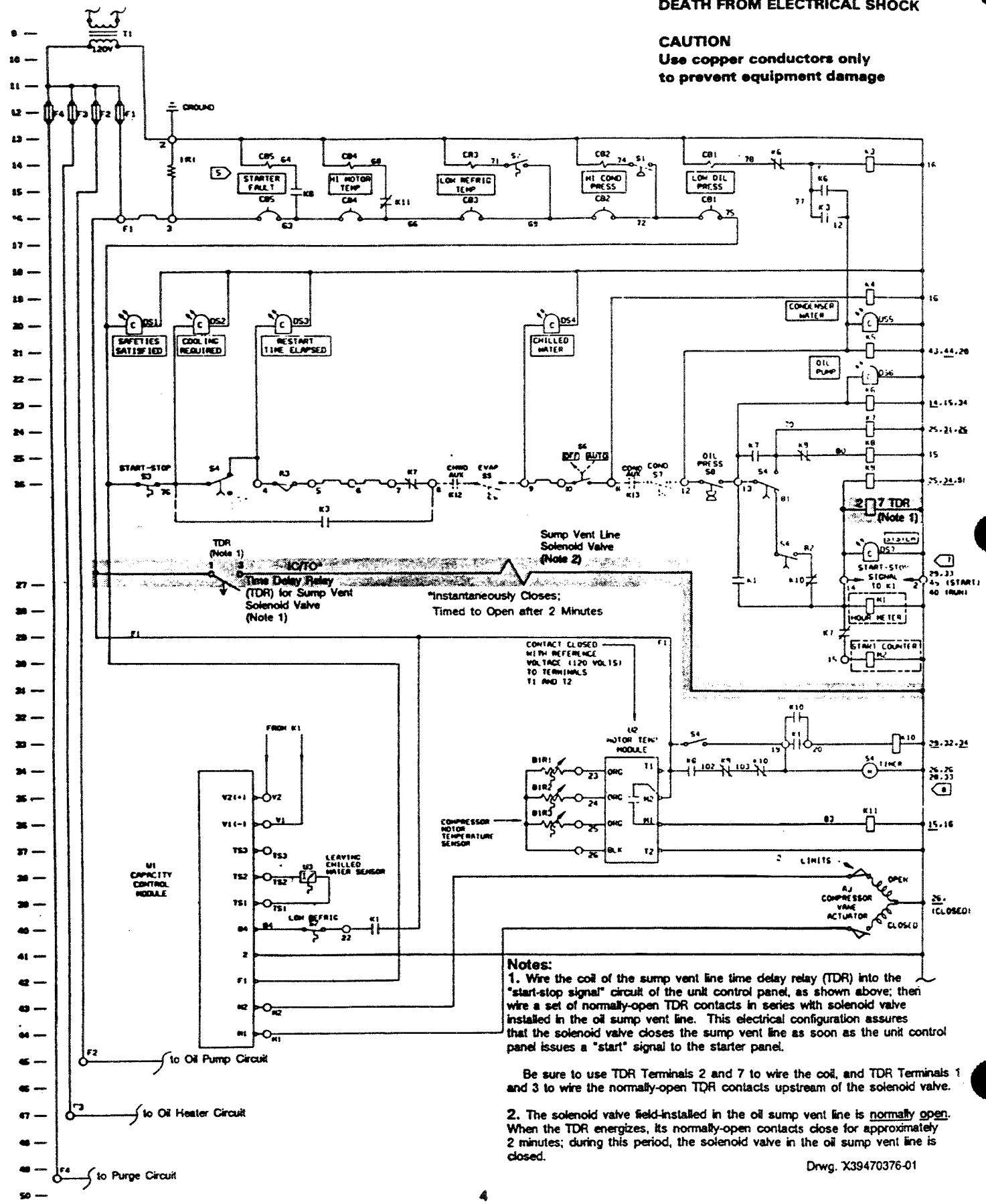

Notes:

1. Wire the coil of the sump vent line time delay relay (TDR) into the "start-stop signal" circuit of the unit control panel, as shown above; then wire a set of normally-open TDR contacts in series with solenoid valve installed in the oil sump vent line. This electrical configuration assures that the solenoid valve closes the sump vent line as soon as the unit control panel issues a "start" signal to the starter panel.

Be sure to use TDR Terminals 2 and 7 to wire the coil, and TDR Terminals 1 and 3 to wire the normally-open TDR contacts upstream of the solenoid valve.

2. The solenoid valve field-installed in the oil sump vent line is normally open. When the TDR energizes, its normally-open contacts close for approximately 2 minutes; during this period, the solenoid valve in the oil sump vent line is closed.

Drwg. X39470376-01

Figure 3
Wiring Connections Required for CVHEs with UCP695 Control Panels
("K"- and "L"-Design CVHEs)

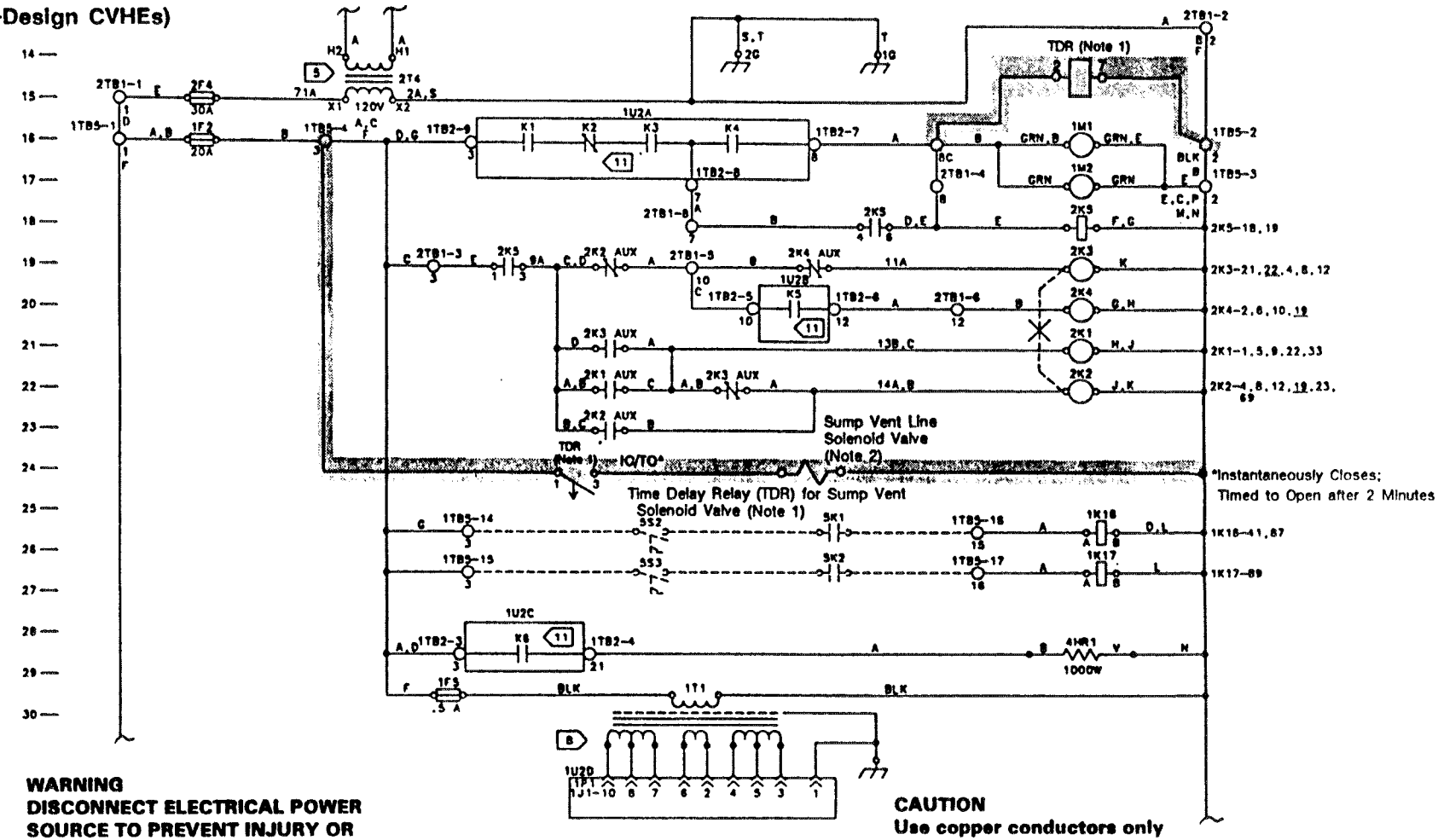

Notes:

1. Wire the coil of the sump vent line time delay relay (TDR) into the "start-stop signal" circuit of the unit control panel, as shown above; then wire a set of normally-open TDR contacts in series with solenoid valve installed in the oil sump vent line. This electrical configuration assures that the solenoid valve closes the sump vent line as soon as the unit control panel issues a "start" signal to the starter panel.

   Be sure to use TDR Terminals 2 and 7 to wire the coil, and TDR Terminals 1 and 3 to wire the normally-open TDR contacts upstream of the solenoid valve.

2. The solenoid valve field-installed in the oil sump vent line is normally open. When the TDR energizes, its normally-open contacts close for approximately 2 minutes; during this period, the solenoid valve in the oil sump vent line is closed.

Drwg. X39470454-01

Figure 4
Parts Required to Correct
Oil Pressure Loss at Start-Up
("A"- thru "L"-Design CVHEs)

Sump Vent-Line Solenoid Valve (Trane Part No. VAL-2690)

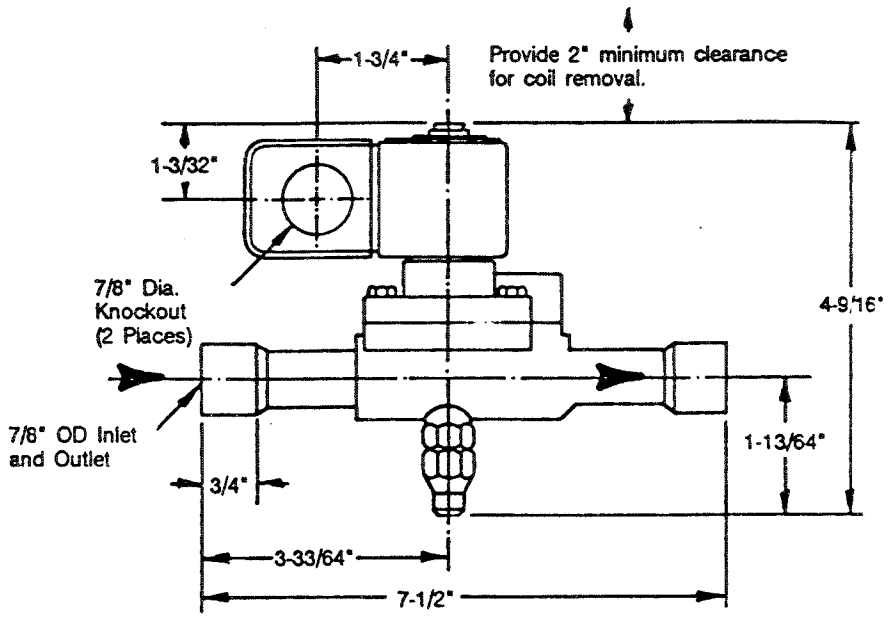

Time Delay Relay (Trane Part No. RLY-1102)

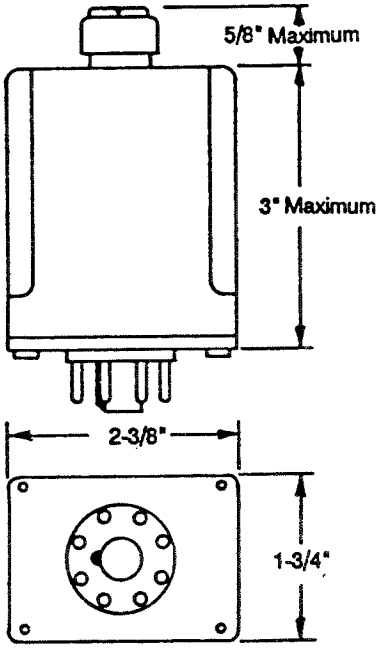

Plug-In Base for Time Delay Relay (Part No. PLU-0172)

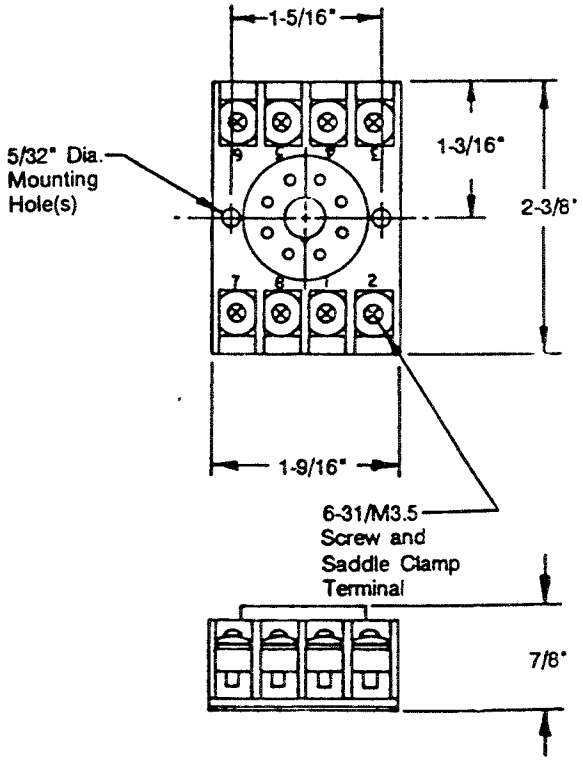

PRINTED BY PRODUCTION SERVICES — LA CROSSE

TRANE™

General Service Bulletin

CVHE-SB-21A

Library	Service Literature
Product Section	Refrigeration
Product	Centrifugal Liquid Chillers
Model	CVHE
Literature Type	General Service Bulletin
Sequence	21A
Date	6/7/89
File No.	SV-RF-CTV-CVHE-SB-21A-689
Supersedes	CVHE-SB-21 5/88

Literature Changes:
CVHE-SB-21 (5/88) – Original issue of bulletin
CVHE-SB-21A (6/89) – Bulletin revised, to include additional purge maintenance and checkout procedures.

Subject: CVHE/CVHB Oilless (ITT) Purge Compressor Rebuild Kit/Maintenance Checks

Introduction:

Effective approximately May 15, 1988, the ITT oilless purge compressor rebuild kit was upgraded to include additional parts. At that time, KIT-1043 became obsolete and was replaced by KIT-1346.

This bulletin does not authorize replacement material and is intended for informational purposes only.

Discussion:

ITT oilless purge compressors rebuilt with Trane KIT-1043 were not always successful for 2 reasons: First, replacement of the compressor cylinder liner was sometimes necessary due to corrosion; and, second, the piston ring was difficult to install without detailed instructions.

To improve the likelihood of a successful purge compressor rebuild, a cylinder liner and compressor rebuild instruction sheet are being added to the purge compressor rebuild kit. With these additions, the new ITT oilless purge compressor kit, KIT-1346, will include the items listed below.

KIT-1346 Contents
(1) piston ring U-cup
(1) piston skirt
(1) 10-32 x 3/8" piston-head screw
(1) cylinder head gasket
(1) cylinder liner gasket
(2) reed valves
(1) cylinder liner
(1) "compressor rebuild" instruction sheet

Note that the piston and valve plate are not included in the standard oilless purge compressor rebuild kit (KIT-1346). Inspect the piston and valve plate periodically, and replace them only when necessary.

Since The Trane Company has a policy of continuous product improvement, it reserves the right to change specifications and design without notice. The installation and servicing of the equipment referred to in this booklet should be done by qualified, experienced technicians.

Purge Unit Maintenance

The ITT oilless purge compressor has a useful service life of 700 to 800 hours of operation, depending on the environment to which it is exposed. This performance level has been obtained through the use of rings specifically designed for this application.

As a part of the routine maintenance program for the purge unit, rebuild the purge compressor after every 700 hours of operation—or sooner, if the compressor fails the "leak-back" check outlined below. Shop rebuild as opposed to field rebuild is recommended to obtain reliable performance. A one-hour "run-in" period after rebuild is needed to seat the compressor ring before the compressor-ring-leak-back check test is performed.

Compressor Ring "Leak-Back" Check

1. Turn off the purge compressor.

2. Remove the suction and discharge lines from the purge compressor. Be sure to plug the lines to the condenser and purge drum to prevent air from entering the unit.

3. Install a pressure gauge on the purge compressor's discharge port; then run the compressor. With the discharge blocked and air entering the suction, it should be possible to develop a minimum pressure of 50 psig.

If you are unable to obtain a gauge reading of at least 50 psig, a problem exists with the valves or piston rings.

4. Turn off the compressor.

5. Plug the purge compressor discharge port.

6. Attach a pressure gauge and shutoff valve to the suction side of the purge compressor. Make sure that the shutoff valve is upstream of the pressure gauge.

7. Open the shutoff valve, and pump compressed air into the purge compressor until the pressure gauge registers 35 psig; then close the shutoff valve.

Start a stop watch when gauge pressure drops to 30 psig and time for 10 seconds. If, after 10 seconds, the head pressure falls below 20 psig, piston ring replacement is indicated.

Note: Replacement of the compressor rings with standard parts will result in a refrigerant-loss rate that is approximately 8 times greater than the leakage rate associated with Trane parts.

Important: Some leakage around the head gasket—and from the cylinder liner—is normal. If this leakage is excessive, a new cylinder head may be required to achieve a satisfactory leak rate. Do not use excessive torque when installing suction and discharge adaptors since this may distort the head. After installing a new piston ring, be sure to operate the purge compressor for 1 hour to "run-in" the new ring; then perform another "leak-back" check.

The Trane Company
La Crosse, Wisconsin 54601-7599
Printed in U.S.A.

©American Standard Inc. 1988

Other Maintenance Checks

Compressor Suction Solenoid

The suction solenoid is used to isolate the condenser when the purge is off. The solenoid is installed with the directional arrow pointing toward the purge compressor suction. This position provides a positive seal to keep freon from leaving the machine and air from entering, down to a minimum vacuum of 14-inches mercury. The solenoid must be checked periodically to insure proper operation. The solenoid can be tested whenever the compressor-ring leak-back check is performed. Remove the condenser connection and perform items 6 and 7 of the compressor-ring leak-back check. Apply 30 psig to the solenoid to determine if the solenoid leaks, then energize the solenoid coil and complete the compressor-ring checkout.

Discharge Check Valve

The compressor discharge check valve can get dirty which will keep it from seating or cause the compressor to operate at a higher discharge pressure, increasing piston seal leakage.

To test the check-valve, open the discharge line at the compressor and with pressure in the purge condenser sump, leak check the open end of the check-valve. The check-valve should also be removed and inspected for obstructions.

Compressor Vibration

Current-production machines have a pig-tail in the compressor discharge line to minimize the transmission of compressor vibration. Although not mandatory, it is advisable to change the compressor discharge line-size to 1/4-inch and add a pig-tail whenever practical.

Purge Operation

The primary function of the ITT purge is to remove non-condensables from the machine when it is operating. A machine with a normal leak-rate will require no more than 1/2-hour of purging per week to maintain efficient operation. If the purge is turned on with the machine as a method to maintain chiller performance or for other reasons, excessive amounts of freon will be lost. Since the optimum freon charge is important to efficient chiller operation, excessive purging can significantly affect CVHE performance during a typical cooling season.

Due to the non-hermetic design of the ITT compressor, recommended purge run-time should not exceed ten minutes per every 2 hours of unit operation. In many cases, this is much more than needed to maintain efficient machine performance. In those cases where the owner demands simultaneous purge and machine operation, freon moisture filtration should be recommended as an alternative to continuous purge operation.

Units Affected:

The updated ITT purge compressor rebuild kit, KIT-1346, is usable for the oilless purge compressors factory-installed on CVHE and CVHB CenTraVacs shipped in late May 1984 and thereafter. It can also be used to rebuild the purge compressors included as an option with the UCP695 (micro panel) retrofit kit.

Recommended Action:

Whenever an ITT oilless purge compressor must be rebuilt, use existing KIT-1043 plus cylinder liner LNR-0062 until local stock is depleted. New rebuild kits—KIT-1346—are now available from La Crosse stock.

TRANE

General Service Bulletin

CVHE-SB-22A

Library	Service Literature
Product Section	Refrigeration
Product	Centrifugal Liquid Chillers
Model	CVHB, CVHE CVHF
Literature Type	General Service Bulletin
Sequence	22A
Date	March 23, 1993
File No.	SV-RF-CTV-CVHE-SB-22A-393
Supersedes	CVHE-SB-22 Dated 9/7/88

Literature Changes:
CVHE-SB-22 (9/88) - Original Service Bulletin.
CVHE-SB-22A (3/93) - Bulletin revised to update electrical schematics, cover UCP revisions and Purifier Purge implementation.

Subject: Control Operation, Setup and Troubleshooting for CVHB, CVHE and CVHF Centrifugal Chillers with UCP-695 Control Panels

Introduction:

The purpose of this service bulletin is to provide control operation and general troubleshooting information for Trane CenTraVac Model CVHB, CVHE and CVHF units that are equipped with Trane UPC-695 unit-mounted microprocessor control panel.

Discussion:

The following control information is only applicable to CVHE units that are "K" design sequence and later; CVHB units that are "V" design sequence and later, and to all CVHF units w/UCP695.

Although this information applies generally to all design sequences indicated above, the wiring diagrams that appear in this service bulletin apply to specific design sequences only. Check the 10th digit of the unit model number (stamped on the chiller nameplate) to determine its design sequence.

Caution: Be sure to refer to wiring diagrams that apply specifically to the design sequence of the unit being serviced.

Table of Contents

3 **Micro Module Overview**

3 **Operator Interface**
3 Chiller Switch
4 Oil Pump Switch
4 Purge Switch
5 Free Cooling Switch
6 Chilled Water Setpoint Pot
6 Current Limit Setpoint Pot
6 Vane Control Switch
7 Unit Status Lights
8 Operator Display

12 **Service Interface**
13 Clear Restart-Inhibit Pushbutton
13 Control Response Setpoint Pot
13 Start Differential Setpoint Pot
14 Condenser Limit Setpoint Pot
15 Condenser Limit Operation
16 Evaporator Refrigerant Trip Point Potentiometer
16 -- Recommended Evaporator Refrigerant Trip Setting
16 -- Evaporator Refrigerant Trip Specifications
16 -- Evaporator Refrigerant Trip Operation
17 -- Evaporator Refrigerant Temperature Sensor Checkout
17 Chilled Water Reset
18 -- Load-Based CWR
20 -- Ambient-Based CWR

22 **Factory Setup**
22 DIP Switch Block S11: Unit Address
23 DIP Switch Block S9: Purge/ Unit Identification; Temperature Range; Unit-Of Measure
25 DIP Switch Block S3: Acceleration Time; Frequency; Phase Imbalance/Surge Protection
27 DIP Switch Block S1: RLA Setpoint

31 **Micro Module (1U3) Input Connections**
31 Terminal Strip 1TB6
31 -- Bidirectional Communications Link (1TB6-1, -2)
31 Terminal Strip 1TB3
31 -- Leaving Evap. Water Temp. Sensor (1TB3-1, -2)
33 -- Entering Evap. Water Temp. Sensor (1TB3-3, -4)
33 -- Spare Temperature Sensors (1TB3-5, -6, -7, -8)
33 -- Condenser Refrig. Pressure Transducer (1TB3-9, -10, -11)
35 -- Evap. Refrig. Temperature Sensor (1TB3-12, -13)
35 -- Cond. Refrig. Temp. Sensor; Ambient Temp. Sensor; Generic BAS Analog Input (1TB3-14, -15)
36 -- External Interlock; External Inhibit (Remote On/Off Control) (1TB3-16, -17)
37 -- Free-Cooling Valve Proof of Closure (1TB3-18, -19)
37 -- Proof of Chilled Water Flow (1TB3-20, -21)
37 -- Proof of Condenser Water Flow (1TB3-22, 23)
38 -- Proof of Inlet Vane Closure (1TB3-24, -25)
38 Terminal Strip 1TB4
38 -- Differential Oil Pressure Switch 1S2 (1TB4-1. -2)
38 -- Running External Interlock (1TB4-3, -4)
39 -- Transition Complete Contacts (1TB4-5, -6)
39 -- 3-Phase Current-Sensing Input (1TB4-7 thru -12)
39 -- Oil Temperature Sensor (1TB4-13, -14)
40 -- Motor Winding Temperature Sensors (1TB4-15 thru -18)
40 -- Bearing Temperature Sensors (1TB4-19, thru -22)

43 **Troubleshooting With UCP695 Diagnostics**
43 UCP695 Overview
43 Troubleshooting
51 Resetting Diagnostics
51 b A3 - Evaporator Refrigerant Temperature Range
51 b A4, A7, A8 - Motor Temperature Sensors
51 b A5 - Maximum Accerlation Time Range
55 b A9 - Oil Temperature Sensor
55 b Ab - Leaving (Evaporator) Water Temperature Sensor
61 b AC - Condenser Refrigerant Pressure Sensor (Optional)
62 b Ad - Evaporator Refrigerant Temperature Sensor
62 b AE - Ambient Temperature Sensor
62 b AF, b b0 - Bearing Temperature Sensors
62 b d9 - Extended Power Loss
68 b dA - Surge
68 b dc - Condenser Water Flow Overdue
70 b E2 - Momentary Power Loss
70 b E3 - Phase Imbalance
72 b E4 - Phase Loss
73 b E5 - Phase Reversal
73 b E7 - High Motor Temperature
75 b E8 - Differential Oil Pressure Switch
75 b E9 - Stop Relay
77 b EA, Eb - High Bearing Temperature
79 b EC - Running Overload
79 b Ed - Chilled Water Flow
81 b EE - Exceeded Maximum Acceleration Time
81 b F0 - Transition
82 b F1 - Running Ext. Interlock or HGBP High Discharge Temp. Switch
82 b F2 - Low Oil Pressure
86 b F3 - Low Oil Temperature
87 b F4 - High Oil Temperature
89 b F5 - High Cond. Pressure
89 b F7 - Condenser Water Flow
91 b F8 - Improper Unit I.D.
91 b F9 - Free Cooling Valves
93 b FA - Actuator
93 b Fb - Low Evap. Refrig. Temp.
95 b Fd - External Interlock
95 b FF - Unit Controller

96 **Compressor Transition Relay and Current Transformer Checkout Procedures**

105 **Power Supply Checkout Procedure**

111 **Checkout Procedure for Vane Control Operation**

 ©American Standard Inc 1993

Micro Module 1U3 Overview

The micro module (1U3) information presented in this section is subdivided into 4 categories:

[ ] **Operator Interface**, which provides information on control setpoints and display data that is typically accessed on a daily basis;

[ ] **Service Interface**, which contains information on control setpoints that are normally only adjusted at initial chiller start-up; and,

[ ] **Factory DIP Switch Settings**, which includes information about unit configuration. Control settings described in this subsection are provided for information only, and are normally performed in the factory so no field adjustments are normally required.

[ ] **Input Connections**, a description of the three micro module terminal strips (i.e., 1TB6, 1TB3 and 1TB4)--and the devices connected to them--comprises the remainder of this section.

Operator Interface

Monitoring devices and all chiller control components requiring adjustment for normal chiller operation are accessible without opening the unit control panel door. These components, which are a part of micro module 1U3, are illustrated in Figure 1 and discussed in the following paragraphs.

Chiller Switch

Located above the display window on the micro module, this 3-position switch enables the owner/operator to define chiller control mode:

[ ] **Standby/Reset.** When power is applied to the unit with the chiller switch set at STANDBY/RESET, the UCP is activated but unit operation is prohibited; operating code **A O** appears on the display. This switch position can be used by the operator or service technician to clear a latching diagnostic (i.e., fault that requires manual reset), or to shut down the unit.

[ ] **Auto/Local.** This switch position allows the chiller to run automatically, using the operational setpoints set at the unit.

[ ] **Auto/Remote.** With the chiller switch in this position, the unit runs automatically using the setpoints established at a remote device and communicated to the chiller with the optional serial communication interface (SCI). (If no setpoints are sent by the remote controller, the UCP uses the operational setpoints set at the unit control panel.)

Note: When the unit is equipped with the SCI option, a SCP699 or Trane BAS can place the unit in the STANDBY/RESET mode even though the chiller switch is positioned at AUTO/REMOTE. However, a latching diagnostic condition at the unit cannot be cleared from a remote device.

Figure 1
Operator Control Panel

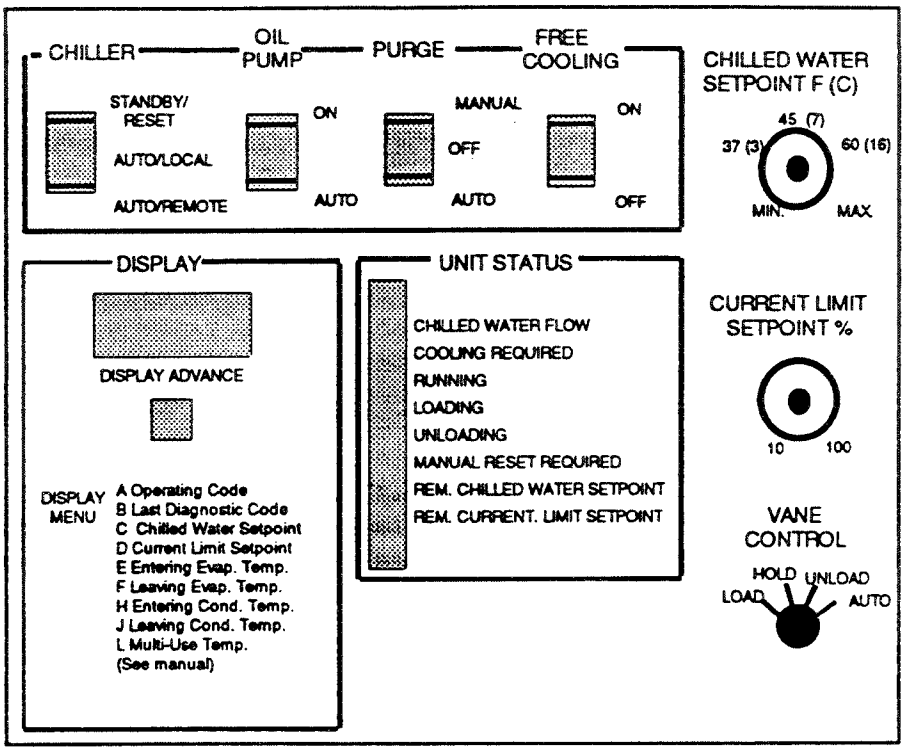

Notes:

1. Control panel shown applies to :
   CVHE = Des. Seq. 1C & later;
   CVHB = Des. Seq. 1D & later;
   CVHF = All Units.w/UCP695.
2. Item "L" on Display Menu available on above design sequences only.
3. Purge switch positions are MANUAL/OFF/TIMED for units of earlier design sequences.
4. All controls shown accessible without opening UCP door.
5. Free Cooling switch is optional.

Oil Pump Switch

A 2-position oil pump switch is located to the right of the chiller switch, above the display window. Switch position functions are described below:

[ ] On. This switch position provides continuous operation of the oil pump, even when the chiller switch is positioned at STANDBY/RESET.

Note: The ON switch position is designed for use by service personnel only; do not leave it in this position! The compressor will not start if the oil pump switch is in the ON position. Latching diagnostic code **b E8** will flash alternately with operating code **A 72** on the UCP's display.

[ ] Auto. Oil pump operation is controlled by the UCP, ensuring oil flow when the compressor is running. This is the normal switch operating position.

Purge Switch

Located next to the oil pump switch (Figure 1), the purge switch enables the owner/operator to select 1 of 3 purge operational modes.

[ ] Manual. This switch position provides continuous operation of the purge compressor, regardless of centrifugal compressor operation, or the position of the chiller switch.

[ ] Off. Purge operation will not occur when the purge switch is set at this position for CVHE units of design sequence "1C" and later, CVHB units, design sequence "1D" and and later, and all CVHF units (equipped with UCP695 and a Purifier Purge). For all units with design sequences earlier than this, purge operation will not occur when the switch is set in the OFF position, unless the purge compressor is already operating due to

closure of the purge run delay timer (3DL1) contacts. Refer to the chiller operation and maintenance literature for a further explanation of purge unit operation.

WARNING!: To prevent injury or death due to electrical shock, open unit disconnect switch before servicing to ensure purge unit is de-energized.

[ ] Timed. CVHE Units = Design Sequence "1B" and earlier only.
CVHB Units = Design Sequence "1C" and earlier only.

This is the normal switch operating position. When switch is in TIMED position, the purge compressor will operate for 5 minutes out of every 2-hour interval. Purge time is automatically extended whenever sufficient noncondensibles remain in the unit since the 4-minute purge timer (3DL1) is reset every time the purge pressure switch trips. (This is true even if the purge switch is readjusted to the OFF position.)

It is important to note that if the chiller is shut down when the purge switch is set at TIMED, the purge will continue to operate for 5 minutes out of every 2-hour period only if the chiller switch is set at either AUTO/LOCAL or AUTO/REMOTE and there is chilled water flow.

If the chiller switch is set at STANDBY/RESET and the purge switch is set at TIMED, the purge unit is also shut down (i.e., provided that 4-minute purge run delay timer 3DL1 has timed out). However, if the chiller switch is set at STANDBY/RESET and the purge switch is set at MANUAL, the purge compressor will run continuously!

[ ] Auto. CVHE Units = Design Sequence "1C" and later only.
CVHB Units = Design Sequence "1D" and later only.
CVHF Units = All units with UCP695.

These units are equipped with the air-cooled Purifier Purge. AUTO is the normal switch operating position. (There is no TIMED switch position.) With this switch set at AUTO, the purge will run continuously when the CenTraVac is in powered cooling operation.

If the chiller switch is set at STANDBY/RESET and the purge switch is set at AUTO, the purge unit is also shut down. However, if the chiller switch is set at STANDBY/RESET and the purge switch is set at MANUAL, the purge compressor will run continuously! On those units equipped with more than one condenser, purge only from the active condenser. Use the manual valves provided to isolate the inactive condenser.

Note: The UCP must be properly configured for the type of purge system provided on the chiller at Dip Switch # 1 on switch block S9 of the UCP. This applies to CVHE units of design sequence "1C" and later, CVHB units, design sequence "1D" and and later, and all CVHF units with UCP695. Refer to "Factory Dip Switch Settings" in this bulletin.

Free Cooling Switch (Optional)

Free cooling enables the chiller to function as a simple heat exchanger, using refrigerant as the working fluid; however, it does not provide control of the leaving chilled water temperature. When condenser water is available at temperatures lower than the desired chilled water temperature, the free cooling option provides "average selection" chiller capacity without operating the compressor.

When the free cooling option is ordered, this two-position switch, located next to the purge switch, allows the operator to select 1 of 2 switch operating positions:

[ ] On. Placing the free cooling switch in this position forces the chiller to enter the free cooling mode (**A 9**); the compressor shuts down if the unit is operating in the powered cooling mode.

Note: Operating code **A 9** appears on the display once the free cooling valves are open; the unit cannot return to the powered cooling mode until these valves are closed. Remember, too, that when the unit is equipped with the SCI option, a remote device can "turn off" free cooling operation while the free cooling switch is set at ON.

[ ] **Off.** This setting enables normal chiller operation within the parameters established for the powered cooling mode. There is a 2-minute delay of the load pulse after start-up.

Note: When the unit is equipped with the SCI option, a remote device can "turn on" the free cooling function while the free cooling switch is positioned at OFF (i.e., provided that the chiller switch is set at AUTO/REMOTE).

Chilled Water Setpoint Potentiometer

Used to set the leaving chilled water temperature, this manually adjustable potentiometer is located at the right-hand side of the window in the control panel door (Figure 1). Available dial settings range from MIN to MAX, with intermediate temperatures indicated in degrees F as well as degrees C. Control deadband is ± 1 F.

To view the front panel chilled water setpoint, adjust the vane control switch to HOLD and press the display advance pushbutton until the "⊢ " code prefix appears on the display. The integer value (i.e., in increments of 1 F or 1 C) immediately to the right of "⊢ " is the UCP's chilled water setpoint. Standard operating range is 37 to 60 F (3 to 16 C), while the temperature range for extended operation is 20 to 70 F (- 6 to 22 C).

Note: To view the active chilled water setpoint, check the entry for code prefix **"C"** of the operator's menu. When the chiller is set at AUTO/REMOTE, and the "Remote Chilled Water Setpoint" status light is lit, the **"C"** value displayed was entered at a remote system control panel (SCP).

Current Limit Setpoint Potentiometer

Located directly below the chilled water setpoint control, this manually adjustable potentiometer is used to register the desired current limit setpoint. Dial settings range from 40% to 100% of the compressor rated-load-amps (RLA) value.

To view the front panel current limit setpoint, turn the vane control switch to HOLD and press the display advance pushbutton until the " ⎯ " code prefix appears on the display; the integer value (i.e., indicated in increments of 1%) at the right of " ⎯ " is the UCP's current limit setpoint.

Note: To check the active current limit setpoint, locate the entry for code prefix **"d"** in the operator's menu. Whenever the chiller switch is set at AUTO/REMOTE and the "Remote Current Limit Setpoint" status light is lit, the **"d"** value displayed was set at the a remote system control panel (SCP).

Vane Control Switch

The four-position, compressor inlet guide vane control switch is located beneath the current limit setpoint control. Each switch position is described below:

[ ] **Load.** As long as the vane control switch remains in this position, the "vanes open" (1U1Q7) relay is continuously energized and automatic vane control is suspended during the "Normal Run" mode (**A 74**). Manual loading does not take precedence over the current limit (**A 75**), condenser limit (**A 76**), or evaporator limit (**A 77**) modes of operation.

[ ] **Hold.** With the vane control switch set at HOLD, both the "vanes open" (1U1Q7) and "vanes close" (1U1Q8) relays are de-energized, so the inlet guide vanes remain at their current position. Automatic vane control is suspended when the unit is in the "Normal Run" mode (**A 74**). However, a current limit (**A 75**), condenser limit (**A 76**), or evaporator limit (**A 77**) mode will override the manual "hold" setting.

Note: Positioning the vane control switch at HOLD redefines the menu of codes appearing on the UCP's display. See " Operator's Display".

[ ] **Unload.** As long as the vane control switch remains in this position, the "vanes close" relay (1U1Q8) is continuously energized and automatic vane control is suspended regardless of the chiller's operating mode.

[ ] **Auto.** Inlet guide vane position is automatically controlled by the UCP when the vane control switch is in AUTO position.

Unit Status Lights

A series of eight status indicator lights are located directly below the purge switch. These blue lights, along with the operating and diagnostic information found on the display, allow the operator to monitor unit operation. The purpose of each status indicator light is described below.

[ ] **Chilled Water Flow.** Illumination of this light indicates that the chilled water flow switch 5S2 is closed.

[ ] **Cooling Required.** This light only illuminates when the UCP proves chilled water flow and detects a cooling requirement (i.e., leaving chilled water temperature exceeds the chilled water setpoint by a value greater than the differential-to-start criteria).

[ ] **Running.** Illumination of this status light indicates that:

- the unit is running (or is in one of the "run" modes);
- the chiller switch is set at AUTO/LOCAL or AUTO/REMOTE, and;
- the start sequence (or transition) is complete. It also remains lit through the chiller's post-lube cycle after the compressor shuts down.

[ ] **Loading.** When this light pulses (on and off), the UCP is loading the chiller (i.e., the vane actuator is driving the vanes open). There is a two-minute delay between unit start-up and load pulse initiation.

[ ] **Unloading.** When this light is on, the UCP is unloading the chiller (i.e., the vane actuator is driving the vanes closed).

Note: It is normal for the "Loading" and "Unloading" status lights to flash on and off in short pulses.

[ ] **Manual Reset Required.** Illumination of this light indicates that the UCP detected a "latching" diagnostic condition and shut down the chiller. Operation cannot resume until the UCP is manually reset (i.e., chiller switch is turned to STANDBY/RESET, then back to AUTO/LOCAL or AUTO/REMOTE).

[ ] **Remote Chilled Water Setpoint.** When this light is on, the UCP is ignoring its front panel chilled water setpoint, and is using the remote chilled water setpoint:

- determined by the optional chilled water reset module, or;
- entered at a remote source (i.e., an SCP699 system control panel or a Trane BAS).

It also illuminates if the chilled water reset function is active. If remote communications are severed, the UCP "defaults" to the control value of its chilled water setpoint potentiometer.

[ ] Remote Current Limit Setpoint. Illumination of this light indicates that the UCP is using a current limit setpoint communicated from a remote source (e.g., SCP or Trane BAS), and is ignoring its front panel current limit setpoint. Again, if remote communications are severed, the UCP "defaults" to the control value set with the current limit setpoint potentiometer.

Operator's Display

The UCP operator's display consists of a blue, four-digit vacuum fluorescent display and a display advance pushbutton. Both are located to the left of the unit status indicator lights. See Figure 1. The first letter of the four-character display identifies the type of data shown in the display window. A list of these indicator codes, along with their meanings, is provided in Table 1. An abbreviated version of this list is also provided on the face of the UCP, directly below the display advance pushbutton.

Table 1
UCP Display Menus

Operator's Menu		Serviceman's Menu (1, 2)	
Code Prefix	Parameter Description	Code Prefix	Parameter Description (and Display Range)
A	Operating Mode (see Table 2)	A	Operating Mode (see Table 2)
b	Last Diagnostic (see Table 3)	b	Last Diagnostic (see Table 3)
C	Active Chilled Water Setpoint: Std. Range = 37-60 F (3-16 C) Extd. Range = 20-70 F (-6-22 C)	c	Panel Chilled Water Setpoint (---, 20-70 F, ---)(---, -6-22 C, ---)
d	Active Current Limit Setpoint (40% thru 100% RLA)	-	Panel Current Limit Setpoint (---, 40% thru 100% RLA, ---)
E	Entering Evap. Water Temp. (Opt.) (---, 12-91 F, ---)(---, -11-33 C, ---)	_	Evaporator Refrigerant Temp. (3) (b Ad, -4-42 F, ---)(b Ad, -20-6 C, ---)
F	Leaving Evap. Water Temperature (b Ab, 12-91 F, ---)(b Ab, -11-33 C, ---)	L	Control Response Setpoint (1 thru 237)
H	Entering Cond. Water Temp. (Opt.) (---, 28-142 F, ---)(---, -2-62 C, ---)	O	Start Differential Setpoint (2-10 F) ((-17 thru -12 C)
J	Leaving Cond. Water Temp. (Opt.) (---, 28-142 F, ---)(---, -2-62 C, ---)	P	Condenser Limit Setpoint (80-120% HPC)
L	Multi-Use Temperature (4) (---, -5-135 F, ---)	U	Evap. Refg. Trip Setpoint (b A3) Std. Range = 29-34 F (-1 thru 1 C) Extd. Range = 0-34 F (-18 thru 1 C)

Notes:
1. To redefine the "operator's menu" to the "serviceman's menu" turn vane control switch to HOLD.
2. For additional information on any item listed in the "serviceman's menu", contact a qualified service organization.
3. Actual measured evaporator refrigerant temperature.
4. "Multi-Use Temp." applications are: Cond. Lvg. Refg. Temp.; CWR Ambient Temp.; CWR Temp. from Analog Input. (This feature applies to CVHE units "1C" design sequence and later, CVHB units "1D" design sequence and later, and to all CVHF w/UCP695.)

The three remaining alphanumeric characters of the display indicate unit operating mode, diagnostic condition, setpoints or actual temperatures as defined by the code prefix. Refer to Tables 1, 2 and 3. A code prefix of **"A"** or **"b"** is followed by a space and a two-digit operating code (Table 2) or diagnostic code (Table 3), respectively.

Note: If the UCP detects a diagnostic condition, it alternately flashes the appropriate diagnostic code and the unit operating mode (at the time of shutdown) on the display. Latching diagnostic conditions can only be cleared manually at the unit, and not from a higher level device (i.e., SCP699 or Trane BAS). In the case of multiple diagnostic condition, only the last diagnostic is displayed.

Table 2
Codes for Unit Operating Modes

4-Character Code	Operating Mode Description
Blank	Power Off
A 0	Standby/Reset
A 1	Auto (Local or Remote)
A 9	Free Cooling
A 70	Restart Inhibit
A 71	Establish Cond. Water Flow
A 72	Start
A 74	Run: Normal
A 75	Run: Current Limit (1)
A 76	Run: Condenser Limit (2)
A 77	Run: Evaporator Limit (3)
A 78	Run: Surge Condition (4)
A 79	Post-Lube
A 88	Reset
A100 (5)	External Inhibit (Remote Start/Stop)

Notes:
1. As current limit setpoint is approached, 1U3 restricts further opening of the inlet guide vanes.
2. As condenser limit setpoint is reached, 1U3 restricts additional compressor loading to avoid shutdown on high condenser pressure (b F5) and initiates "head relief request" (i.e., optional relay).
3. 1U3 restricts further opening of the inlet guide vanes to avoid unit shutdown on low evaporator refrigerant temperature (b Fb).
4. 1U3 limits compressor loading and initiates "head relief request" (i.e., optional relay) when unit enters a surge condition. An automatic unit shutdown occurs if unit remains in surge for 15 minutes (b dA).
5. This feature provided on CVHE units, design sequences "1C" and later, CVHB units, design sequences "1D" and later and all CVHF units w/UCP695.

Table 3
Unit-Level Diagnostic Codes

Diag. Code	Diagnostic Explanation	Reset Type(1,2)	Diag. Code	Diagnostic Explanation	Reset Type(1,2)
b A3	Evaporator Refrig. Temp. Range	Manual	b E8	Differential Oil Pressure Switch	Manual
b A4	Motor Temperature Sensor # 1	Manual	b E9	Stop Relay	Manual
b A5	Max. Acceleration Time Range	Manual	b EA	High Inboard Brg. Temp. (Sen. # 1)	Manual
b A7	Motor Temperature Sensor # 2	Manual	b Eb	High Outbrd. Brg. Temp. (Sen. # 2)	Manual
b A8	Motor Temperature Sensor # 3	Manual	b EC	Running Overload	Manual
b A9	Oil Temperature Sensor	Manual	b Ed	Chilled Water Flow	Auto
b Ab	Leaving Water Temp. Sensor	Manual	b EE	Max. Acceleration Time Exceeded	Manual
b AC	Cond. Refrig. Pressure Sensor (3)	Manual	b F0	Transition	Manual
b Ad	Evap. Refrig. Temperature Sensor	Manual	b F1	Running External Interlock (3)	Manual
b AE	Ambient Temperature Sensor (3)	Manual	b F2	Low Oil Pressure	Manual
b AF	Bearing Sensor # 1 (Inboard) (3)	Manual	b F3	Low Oil Temperature	Auto
b b0	Bearing Sensor # 2 (Outboard) (3)	Manual	b F4	High Oil Temperature (4)	Manual
b d9	Extended Power Loss	Auto	b F5	High Condenser Refrig. Pressure	Manual
b dA	Surge	Manual	b F7	Condenser Water Flow	Auto
b dC	Condenser Water Flow Overdue	Manual	b F8	Improper Unit Identification	Manual
b E2	Momentary Power Loss	Auto	b F9	Free-Cooling Valves	Manual
b E3	Phase Imbalance	Manual	b FA	Actuator	Manual
b E4	Phase Loss	Manual	b Fb	Low Evaporator Refrig. Temp.	Manual
b E5	Phase Reversal	Manual	b Fd	External Interlock (5)	Manual
b E7	High Motor Temperature	Manual	b FF	Unit Control Module	Manual

Notes:
1. Check the "Manual Reset Required" status indicator light to determine if manual reset is necessary.
2. It is not possible to clear a latching diagnostic condition (i.e., one requiring manual system reset) at the unit from a higher-level device (e.g., an SCP699 or Trane BAS).
3. Optional feature.
4. Feature provided for CVHE units design sequence "1C" and later, CVHB units design sequence "1D" and later, and all CVHF units w/UCP695.
5. Feature provided for CVHE units before design sequence "1C"; CVHB units before design sequence "1D". Replaced by operating code A 100, "External Inhibit" (remote start/stop) at that time.

Codes prefixed by a "C" or "d" are followed by the corresponding setpoint value (i.e., chilled water or current limit, respectively) presently used to control the chiller. If the chiller switch is set at AUTO/LOCAL, setpoint values displayed are those set manually at the chiller's UCP. However, when the chiller switch is set at AUTO/REMOTE, and the proper status indicator lights are on, the setpoint values displayed were established at remote device (e.g., SCP699 or Trane BAS).

"E", "F", "H", "J" and "L" code prefixes are followed by an actual measurement of a system parameter (e.g., entering evaporator water temperature). (Code prefixes "E", "H" and "J" and "L" represent sensor options; if these sensors are not installed, a bar [—] appears on the display.)

Use the display advance pushbutton to scroll from one menu entry to the next. A blank display marks the end of the "operator's menu" for CVHE units of design sequence "1B" and earlier and CVHB units, design sequence "1C" and earlier. When the multi-use temperature sensor (4RT6) is ordered, the end of the operator's menu is indicated by the "L" operating code prefix for these units:

— CVHE Units = Design Sequence "1C" and later;
— CVHB Units = Design Sequence "1D" and later;
— CVHF Units = All units with UCP695.

If the multi-use temperature sensor option is not used, a bar [—] appears in the last position on the display.

To return to the top of the menu, press the pushbutton once.

Turning the vane control switch to the HOLD position redefines the display code prefixes to indicate the "local" (or front panel) chilled water and current limit setpoints, actual evaporator refrigerant temperature, and settings for control response, start differential, condenser limit and evaporator refrigerant "trip" point. See Table 1. Code prefixes "A" and "b" remain unchanged when the operating menu is redefined.

Important! Do not leave the vane control switch in HOLD. In this position, control of leaving chilled water is suspended. Only the "safety" features are functional!

Note: While in the serviceman's menu, the integer values displayed for the panel chilled water, condenser limit, and evaporator refrigerant trip setpoints represent the entire adjustment for these potentiometers. Unless the unit is specifically designed for "extended range" operation, the UCP will adhere to the parameters established for "standard range" chillers.

Important! Advancing past the "Last Diagnostic Code" entry in the menu automatically clears the code registered there from memory!

Service Interface

The following components can only be accessed by opening the control panel door. Each of these devices (Figure 2) is set at initial unit start-up by a qualified service technician.

Figure 2
UCP Service Interface and DIP Switch Locations
(Accessible Only With UCP Door Open)

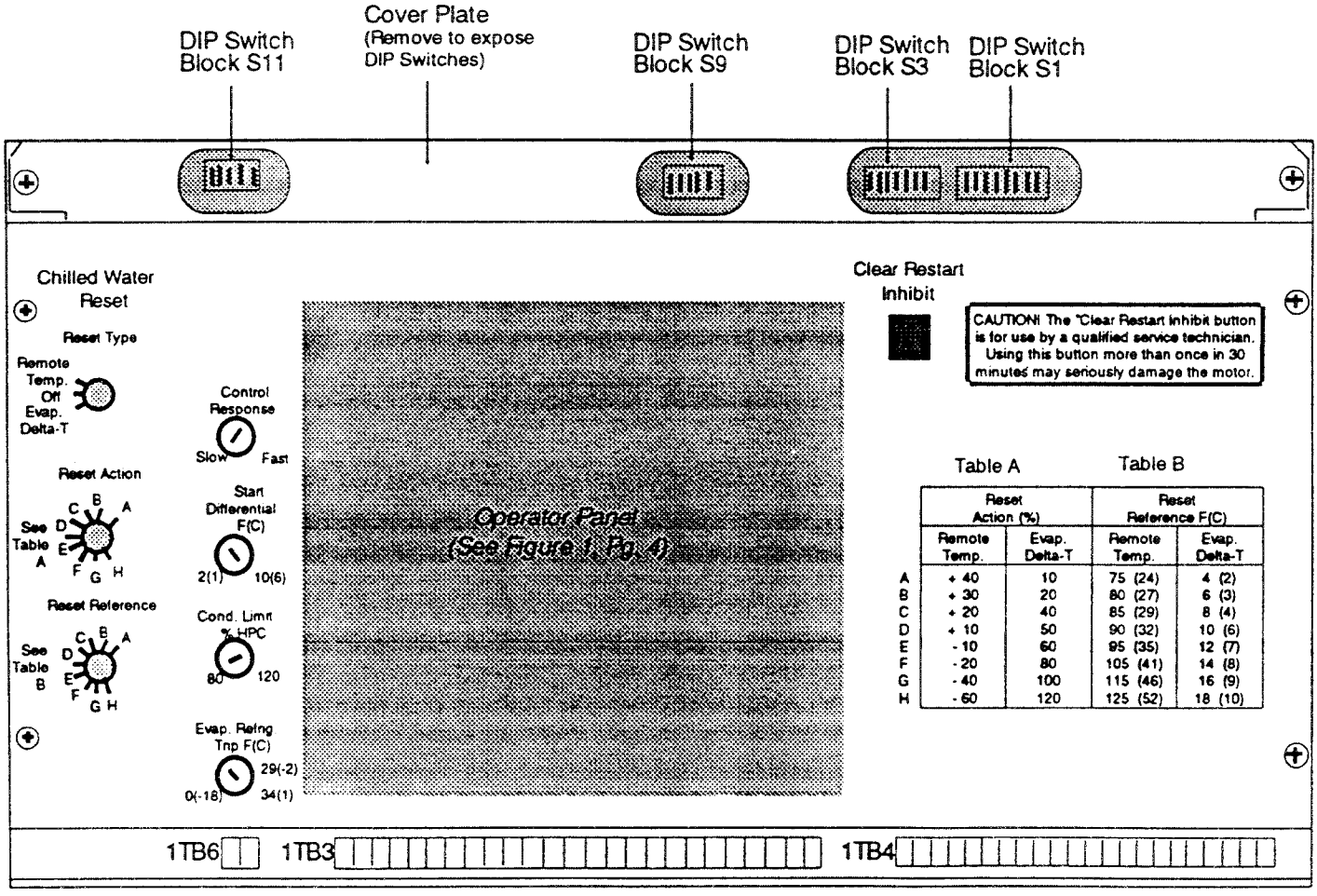

Table A / Table B

	Reset Action (%)		Reset Reference F(C)	
	Remote Temp.	Evap. Delta-T	Remote Temp.	Evap. Delta-T
A	+ 40	10	75 (24)	4 (2)
B	+ 30	20	80 (27)	6 (3)
C	+ 20	40	85 (29)	8 (4)
D	+ 10	50	90 (32)	10 (6)
E	- 10	60	95 (35)	12 (7)
F	- 20	80	105 (41)	14 (8)
G	- 40	100	115 (46)	16 (9)
H	- 60	120	125 (52)	18 (10)

WARNING! To prevent injury or death due to electrical shock, exercise extreme care whenever working with energized electrical components.

Caution: To ensure proper chiller operation, never tamper with any UCP-695 controls located behind panel door without first consulting a qualified service technician.

Clear Restart-Inhibit PushButton

By pressing this pushbutton, located to the right of the chilled water setpoint potentiometer, the service technician can clear the restart inhibit timer.

Caution: The clear restart inhibit pushbutton is for use only by a qualified service technician. Using this button more than once in 30 minutes may seriously damage the compressor motor.

Note: When the clear restart inhibit (CRI) button is pressed while the chiller switch is in the STANDBY/RESET position, only the remaining portion of the 30-minute anti recycle timer is cleared. Toggling the chiller switch to one of the AUTO positions results in the activation of either a 4- or 15-minute run-inhibit timer. If the CRI pushbutton is pressed while the chiller switch is in one of the AUTO positions, all restart-inhibit timers are cleared and the UCP will initiate a start sequence if cooling is required.

Control Response Setpoint Potentiometer

(To be set/calibrated by a qualified Trane service technician only.)
Located to the left of the display window, this manually adjustable potentiometer can be set at any position between 1 and 237. The units used to delimit these settings are arbitrary.)

The control response setting directly affects the vane controller's speed of response to changes in cooling requirements; the lower the control response setting, the slower the response time of the vane controller. To view the actual control response setting, position the vane control switch at HOLD and press the display advance pushbutton until code prefix "L " appears.

Use the following equation to determine the recommended control response setting for a particular unit application:

$$\text{Recommended Control Response Setpoint} = \frac{250}{\text{Design Delta-T}} \times \frac{\text{Actual Flow Rate}}{\text{Design Flow Rate}},$$

where "design delta-T" is the design temperature drop in the evaporator. For example, if a unit is designed for a 55 F entering evaporator temperature and a 45 F leaving evaporator temperature, its "design delta-T" is 10 F.

Start Differential Setpoint Potentiometer

With an adjustment range of 2 F to 10 F (1 C to 6 C), this manually adjustable potentiometer is used to establish the number of degrees that the chilled water temperature must rise above the setpoint before the unit will start. (It also determines the actual compressor "stop" point; see Table 4.)

To display the actual start differential in the display window, position the vane control switch at HOLD and press the display advance pushbutton until code prefix "O" appears.

Recommended differential to start setpoints, along with the corresponding compressor stop differential setpoints, are indicated in Table 4.

Table 4
Compressor "Start/Stop" Points

Chiller Delta-T F (C)	Recommended Differential to Start F (C)	Corresponding Differential to Stop F (C)
4 or less (2.2 or less)	2 (1)	2.0 (1.1)
5 or 6 (2.8 or 3.3)	3 (2)	2.0 (1.1)
7 or 8 (3.9 or 4.4)	4 (2)	2.0 (1.1)
9 or 10 (5.0 or 5.5)	5 (3)	2.0 (1.1)
11 or 12 (6.1 or 6.7)	6 (3)	2.0 (1.1)
13 or 14 (7.2 or 7.8)	7 (4)	2.0 (1.1)
15 or 16 (8.3 or 8.9)	8 (4)	2.4 (1.3)
17 or 18 (9.4 or 10.0)	9 (5)	3.2 (1.7)
19 or more (10.6 or more)	10 (6)	4.0 (2.2)

Condenser Limit Setpoint Potentiometer (% HPC; Optional)

The control range of this optional, adjustable potentiometer is 80% to 120% of the rated high pressure control setpoint. For standard units (i.e., with an HPC setting of 15 psig), then, the condenser limit setting range is 12 to 18 psig. The range for ASME units--with a 25 psig HPC setting--is 20 to 30 psig.

To display the actual condenser limit setpoint in the display window, turn the vane control knob to HOLD and press the display advance pushbutton until "P" appears on the display. The integer value immediately to the right of "P" is the condenser limit setpoint.

Note: The condenser high pressure cutout switch (1S1) remains active and will shut down unit operation on latching diagnostic **b F5** (i.e., high condenser refrigerant pressure) if its "trip" point is exceeded.

Recommended Condenser Limit Setpoint

The recommended condenser limit setpoint is 93% of the condenser high pressure cutout switch (1S1) setting.

Condenser Limit Operation (A 76)

Optional condenser limit control provides a means for maintaining chiller operation while high head pressure conditions exist. The control scheme used is outlined below, and an example follows:

1. Micro module 1U3 continually monitors condenser refrigerant pressure via condenser pressure transducer 1R1.

2. When condenser pressure rises to within 90% to 96% of the condenser limit setpoint, 1U3 slows the opening of the inlet vanes and allows for normal vane closure.

3. When condenser pressure rises to within 96% to 100% of the condenser limit setpoint, 1U3 prohibits further vane opening but allows vane closure.

4. If head pressure reaches the condenser limit setpoint, 1U3 initiates a **regulated vane closure** that continues until the condenser pressure is under control. (Notice that the micro module does not issue a "hard close" signal to the vane actuator--shutting the vanes to their minimum open position--at this time.)

5. If the controlled vane closure begun in Step 4 does not bring condenser pressure under control, the unit shuts down on latching diagnostic **b F5** when the high pressure switch (1S1) setpoint is exceeded.

[ ] **Example.** To better understand the condenser limit control scheme just described in Steps 1 through 5, calculate the condenser limit setpoint in psig--along with the "control points"--for a unit with these characteristics:

[ ] Standard Unit
[ ] Condenser Rating = 15 psig
[ ] HPC Switch (1S1) Setpoint = 15 psig
[ ] Condenser Limit Setpoint = 93% of HPC setpoint

a. Calculate the psig value of the condenser limit setpoint.

Condenser Limit Setpoint = Condenser Rating x % HPC
= 15 psig x 93%
= 14 psig (approximately)

b. Using the condenser limit setpoint just calculated, determine the condenser limit "control points".

90% x 14 psig = 12.6 psig
96% x 14 psig = 13.4 psig
100% x 14 psig = 14.0 psig

In this example, then:

a. The UCP will limit vane opening when condenser head pressure is between 12.6 and 13.4 psig.

b. The UCP will not allow the vanes to open further when condenser head pressure is between 13.4 and 14 psig, though vane closure is allowed.

c. When condenser head pressure reaches 14 psig, the UCP will initiate a controlled vane closure signal until the condenser pressure drops.

d. If condenser head pressure exceeds 15 psig, the unit is shut down on latching diagnostic **b F5**.

Evaporator Refrigerant Limit Potentiometer

With a standard adjustment range of 29 F to 34 F (-2 C to 1 C), this manually adjustable potentiometer is used to establish the chiller's low refrigerant temperature "trip" point. An optional "extended range" is also available which provides an adjustment range of 0 F to 34 F (-18 C to 1 C). To view the actual control setting, adjust the vane control knob to "HOLD" and press the display advance pushbutton until "U" appears on the display.

Note: Attempting to adjust the evaporator refrigerant "limit" point below the minimum range value will result in a latching diagnostic (i.e., requiring manual reset). Diagnostic code **b A3** will flash alternately on the display with the current operating code at the time the minimum range value was violated.

Caution: To assure proper chiller operation, adjustment of this control must always be performed by a qualified service technician.

Recommended Evaporator Refrigerant Limit Setting

Set the evaporator refrigerant "trip" point at 32 F unless a lower setpoint is required (i.e., because the design refrigerant temperature is less than 34 F).

Evaporator Refrigerant Limit Specifications

Adjustment Range:

29 F to 34 F for standard-range operation; and,
0 F to 34 F for extended-range operation.

Adjustment Resolution:

1.0 F or 1.0 C

Setpoint Out of Range:

Too Low = Diagnostic **b A3** occurs.
Too High = No diagnostic; UCP uses end-of-range value (i.e., 34 F).

Evaporator Refrigerant "Limit" Operation (A 77)

Freeze protection is provided by a multistep control algorithm built into the micro module. As the control point is approached, 1U3 sequentially initiates the following actions:

1. At 5-6 F above trip setting, limits the amount of vane opening, but allows vane closure;

2. At approximately 2 F above trip setting, prohibits additional vane opening, but allows vane closure;

3. At approximately 1 F above trip setting, initiates a regulated vane closure until evaporator refrigerant temperature is above the control point;

4. At trip setting, fully closes the inlet vanes; and,

5. Shuts down chiller operation while the vanes are fully closed if the setpoint violation persists.

Note: Chiller shutdown is not instantaneous; the micro module integrates to 30 F-seconds when the setpoint violation occurs.

This control scheme is designed to maintain chiller operation at the maximum capacity allowable without excessive vane modulation. Each of the five stages described above is further modified by the rate at which the refrigerant temperature is changing.

Note: The "control point" mentioned in Step 3 is 2 F above the evaporator refrigerant "trip" setpoint. However, if the evaporator refrigerant "trip" point is 29 F, then the "control point" is 1.5 F, relative, for standard-range units.

Evaporator Refrigerant Temperature Sensor Checkout
It is good practice to check the evaporator refrigerant temperature thermistor (4RT5) whenever setting up or adjusting the evaporator refrigerant "trip" setpoint. To check thermistor integrity:

1. Adjust the chiller switch to the STANDBY/RESET position.

2. Remove thermistor 4RT5 from its bulbwell but do not disconnect the thermistor leads from the micro module.

3. Place the thermistor in an ice bath along with an accurate thermometer. Use the thermometer to verify that the ice water is at 32 F.

4. View the refrigerant temperature display at the control panel. To do this, set the vane control switch at HOLD and press the display advance push button until "—" appears on the display.

Agitate the sensor in the ice bath for several minutes to allow the sensor temperature to stabilize; then check the display window. The evaporator refrigerant temperature displayed should be 32 ± 2 F.

Notes:
a. Evaporator refrigerant temperature "sensing system" accuracy is specified for ± 0.8 F accuracy at 29 F, although the accuracy of ± = 1.0 F at 30 F and ± 2.0 F at 32 F are acceptable.

b. If the sensor registers + 2.0 F (on the control panel display) at a 32 F temperature, and a control point above 32 F is desired--it may be necessary to compensate for the discrepancy by resetting the "trip" point upward.

5. Remove the 4RT5 thermistor sensor leads from terminals 1TB3-12 and 1TB3-13 on micro module 1U3; then check the resistance of sensor 4RT5.

Refer to the 4RT5 resistance table in the "Troubleshooting with Diagnostics" section of this bulletin, and find the measured resistance reading. The corresponding temperature in this table should match the actual temperature measured in Step 3 (i.e., within the accuracy criteria defined at the bottom of the 4RT5 resistance table).

Chilled Water Reset (CWR)

Chilled water reset is designed for those applications where the design chilled water temperature is not required when the chiller system is operating at part load. In these cases, the leaving chilled water temperature setpoint can be reset upward using the chilled water reset option.

Note: To enable CWR, the chiller switch must be set at AUTO/REMOTE. The remote chilled water setpoint status light will energize. CWR is active as long as the chiller switch is in AUTO/REMOTE even when the chiller is not operating.

The chilled water reset option consists of a factory-installed module in the unit control panel and a field-installed sensor. Sensor location is dependent on whether "load" or "ambient" chilled water setpoint reset is desired:

[ ] If "load" CWR is selected, the CWR sensor is field-installed in the return chilled water piping and connected to terminals 1TB3-3 and 1TB3-4 on micro module 1U3.

[ ] With the selection of "ambient" CWR, the sensor leads are connected to terminals 1TB3-14 and 1TB3-15 on micro module 1U3, and the sensor itself is typically field-installed just inside the building's fresh air intake duct, or on the north exterior wall of the building. In either case, shelter the sensor from direct sunlight and the elements.

Operator selection of the type of chilled water reset desired for a given application is accomplished at the unit control panel. See Figure 2, page 12; the conversion tables needed to determine the CWR control settings (i.e., Tables A and B) are provided on the face of the micro module, at the immediate right of the current limit setpoint potentiometer.

WARNING! To prevent injury or death due to electrical shock, use care when measurements, adjustments, or other service-related operations are performed with power on.

Load-Based CWR
When load-based chilled water reset is desired, the CWR controls must be adjusted as described below:

1. Reset Type Knob: Set at "Evap. Delta-T".

2. Reset Reference Knob: Set at the design delta-T (DDT) for the unit. Use the "Evaporator Delta-T" column of Table B (Figure 2, page 12) to convert the unit DDT value to a letter code (i.e., A through H).

Note: In those instances where the DDT value falls between the values listed, always use the next lower value.
Example: Chiller A is designed to operate with an entering chilled water temperature of 56 F, and a leaving chilled water temperature of 44 F.

a. Determine Chiller A's design delta-T.
   DDT = Design Ent. Chilled Water Temp. - Design Lvg. Chilled Water Temp.
   DDT = 56 F - 44 F
   DDT = 12 F
b. Convert Chiller A's DDT to a letter code. Locate 12 F DDT in Table B under "Evap. Delta-T"; 12 F DDT = "E".
c. Turn the reset reference knob to control setting "E".

3. Reset Action Knob: Set at the amount of reset desired. Use the following equation and the "Evaporator Delta-T" column of Table A (Figure 2, page 12) to determine the amount of reset desired; then convert this amount to a letter code (i.e., A through H).

RCWS = PCWS + RAS [DDT - (ENT - LVG)] where:
   RCWS = Reset Chilled Water Setpoint
   PCWS = Front Panel Chilled Water Setpoint
   RAS = Reset Action Setpoint
   DDT = Design Delta-T
   ENT = Entering Chilled Water Temperature
   LVG = Leaving Chilled Water Temperature

Notes about this equation:

a. To convert the reset action values in Table A from percentages to decimal values, divide by 100. Decimal values must be used for the RAS variable in the equation.

b. System control will not allow chilled water reset downward even though it is possible in this equation.

c. Increasing the reset action setpoint (RAS) to a larger number results in more reset.

d. If you know how many degrees of chilled water reset are desired (i.e., RCWS), as well as the DDT, ENT and LVG, the equation can be rearranged to solve for the reset action setpoint (RAS):

$$RAS = \frac{RCWS - PCWS}{[DDT - (ENT - LVG)]}$$

Review Examples 1 and 2 below to ensure that it is understood both how to calculate a load-based reset chilled water setpoint, and how this reset value changes with the selected reset reference and reset action control settings.

Example #1:

DDT = 10.0 F
PCWS = 45.0 F
RAS = 0.5 (i.e., "50" in Table A)

When the unit is operating at full load, ENT is 55 F and LVG is 45 F, so:

RCWS = 45.0 F + 0.5 F [10.0 F - (55 F - 45 F)]
RCWS = 45.0 F + 0 F
RCWS = 45.0 F

Since LVG and RCWS are equal (i.e., both are 45 F), there is no reset at this full load condition.

If this same unit is only half loaded (i.e., ENT - LVG = 5.0 F), then:

RCWS = 45.0 F + 0.5 [10.0 F - 5.0 F]
RCWS = 45.0 F + 2.5 F
RCWS = 47.5 F

In this situation, the chilled water setpoint will be reset 2.5 F upward, and the chiller will operate with an entering chilled water temperature of 52.5 F and a leaving chilled water temperature of 47.5 F.

Example #2:

DDT = 10.0 F
PCWS = 45.0 F
RAS = 1.0 (i.e., "100" in Table A)

Chiller B is operating at full load, and the delta-T across the evaporator (ENT - LVG) is 10 F, so:

RCWS = 45.0 F + 1.0 [10.0 F - 10 F]
RCWS = 45.0 F + 0 F
RCWS = 45.0 F

Under this full load condition, LVG and RCWS are again equal (i.e., both are 45.0 F), so there is no reset.

If this same unit is only half loaded (i.e., ENT - LVG = 5.0 F), then:

RCWS = 45.0 F + 1.0 [10.0 F - 5.0 F]
RCWS = 45.0 F + 5.0 F
RCWS = 50.0 F

In this situation, the chilled water setpoint will be reset 5.0 F upward, and the chiller will operate with an entering chilled water temperature of 55.0 F and a leaving chilled water temperature of 50.0 F. Notice that an RAS of 1.0 yields a constant return temperature; as unit load varies, the leaving chilled water setpoint is reset so that the entering chilled water temperature is always 55 F.

Ambient-Based CWR

When ambient-based chilled water reset is desired, the CWR controls must be adjusted as described below:

1. Reset Type Knob: Set at "Remote Temp."

2. Reset Reference Knob: This knob is used to set the temperature below or above which reset begins (i.e., design ambient). Use the "Remote Temperature" column of Table B (Figure 2, page 12) to convert the desired design ambient temperature to a letter code (i.e., A through H).

Example: Chiller A's design ambient temperature is 90 F (i.e., chilled water reset is desired if the ambient temperature falls below 90 F).

a. Convert Chiller A's design ambient to a letter code. Locate 90 F in Table B under "Remote Temp."; 90 F = "D".
b. Adjust the reset reference knob to control setting "D".

3. Reset Action Knob: Set at the amount of reset desired. Use the following equation and the "Remote Temperature" column of Table A (Figure 2, page 12) to determine the amount of reset desired and then convert this amount to a letter code (i.e., A through H).

RCWS = PCWS + RAS (RRS - AMB) where:

RCWS = Reset Chilled Water Setpoint
PCWS = Front Panel Chilled Water Setpoint
RAS = Reset Action Setpoint
RRS = Reset Reference Setpoint
AMB = Outdoor Ambient Temperature

Notes about this equation:

a. To convert the reset action values in Table A from percentages to decimal values, divide by 100. Decimal values must be used for the RAS variable in the equation.
b. Increasing the RAS to a larger number results in more reset.
c. Using a negative RAS causes the chilled water setpoint to be reset upward whenever the ambient temperature exceeds the design ambient. System control will not allow the chilled water setpoint to be reset downward even though it is possible in this equation.

Review Example 3 below to ensure that the correlation between the reset action setting and the reset chilled water setpoint in ambient-based chilled water reset is understood.

Example #3:

PCWS = 45.0 F
RAS = 0.2 (i.e., "20" in Table A)
RRS = 90.0 F

When the outdoor air temperature is 80 F, then:

RCWS = 45.0 F + 0.2 (90.0 F - 80 F)
RCWS = 45.0 F + 2.0 F
RCWS = 47.0 F

If the outdoor air temperature drops to 70 F, then:

RCWS = 45.0 F + 0.2 (90.0 F - 70 F)
RCWS = 45.0 F + 4.0 F
RCWS = 49.0 F

Thus, a RAS of 0.2 (i.e., +20%) provides 2 F of reset for every 10 F drop in outdoor air temperature below the design ambient.

Factory DIP Switch Settings

Controls discussed in this section are factory-set, and do not normally require adjustment at initial start-up or during operation of the unit. Use the information provided here only to check the switch settings at initial start-up, or when a new micro module (1U3) is installed. To access the UCP control components described below, open the unit control panel door and remove the access cover strip located at the top of the micro module. All of the necessary factory inputs are set at four DIP switch blocks. See Figure 2 on page 12.

WARNING!: To prevent injury or death due to electrical shock, always open unit disconnect switch before opening control panel door.

Caution: To ensure proper chiller operation, never tamper with any UCP695 controls located behind panel door without first consulting a qualified service technician.

Switch Block S11: Unit Address

This DIP switch block Shown below in Figure 3, must be set when the unit is used with an SCP699 system control panel. The switches are set to "tag" the chiller with a binary address of either "1", "2" or "3" as indicated in Table 5 below:

Figure 3
Unit Address DIP Switch Block (S11)

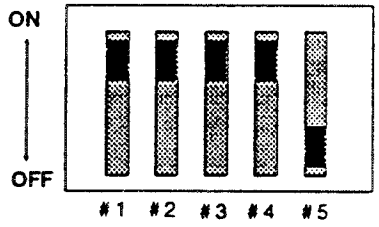

Note: See Figure 2, Page 12 for DIP Switch Locations.

Table 5 - Settings for DIP Switch Block S11

Switch Block S11 DIP Switches					Corresponding Binary Unit Address
1	2	3	4	5	
NA	NA	NA	ON	OFF	1
NA	NA	NA	OFF	ON	2
NA	NA	NA	OFF	OFF	3

Note: All units communicating with an SCP must have separate, unique addresses. If 2 or more units connected to an SCP have identical addresses, SCP-UCP communications are automatically terminated.

Switch Block S9: Purge/Unit Identification; Temperature Range; Unit-of-Measure

Unit Identification For:

— CVHE Units = Design Sequence "1B" or earlier, only, and;
— CVHB Units = Design Sequence "1C" or earlier only.

For these units, DIP Switch Nos. 1, 2 and 3 on this block (S9) tell the micro module (1U3) what type of unit it is controlling. See Figure 4. Unit identification is established using various combinations of "On" and "Off" DIP switches. Unit type should match the corresponding code, as indicated in Table 6 below:

Figure 4
Unit Identification/Temperature Range/Unit-of-Measure DIP Switch Block (S9)

Note: See Figure 2, Page 12 for DIP Switch Locations.

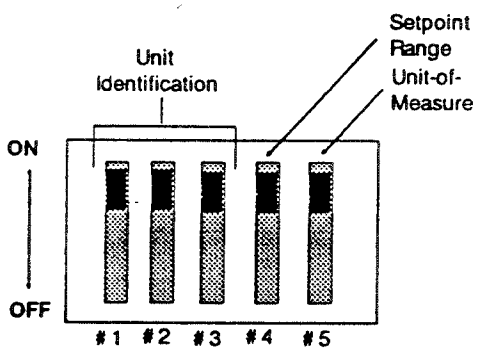

Table 6 - Settings for DIP Switches 1, 2, 3 On Switch Block S9

Switch Block S9 DIP Switches					Corresponding Unit Identification
1	2	3	4	5	
ON	ON	OFF	n/a	n/a	CVHE or CVHB (STD)
ON	OFF	OFF	n/a	n/a	CVHE or CVHB (ASME)

CVHE Units = Design Sequence "1B" or earlier, only, and;
CVHB Units = Design Sequence "1C" or earlier only.

Unit Identification For:

— CVHE Units = Design Sequence "1C" and later;
— CVHB Units = Design Sequence "1D" and later;
— CVHF Units = All units w/UCP695.

For these units, DIP Switch No. 1 on this block (S9) is used to identify (for the micro) the type of purge unit provided on the chiller (Table 7). DIP Switch Nos. 2 and 3 tell the micro module (1U3) what type of unit it is controlling. See Figure 5. Unit identification is established using various combinations of "On" and "Off" DIP switches. Unit type should match the corresponding code, as indicated in Table 7:

Figure 5a
Purge/Unit Identification/Temperature Range/
Unit-of-Measure DIP Switch Block (S9)

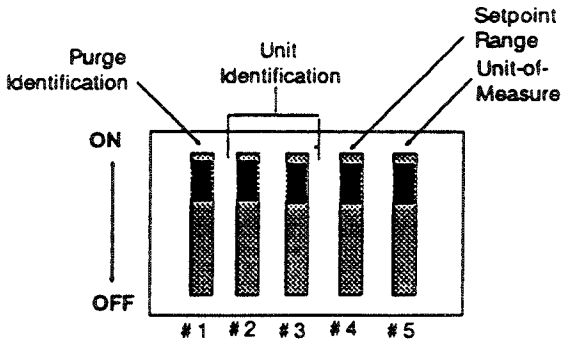

Note: See Figure 2, Page 12 for DIP Switch Locations.

Table 7 - Settings for DIP Switch 1 On Switch Block S9

Switch Block S9 DIP Switches					Corresponding Unit Identification
1	2	3	4	5	
ON	n/a	n/a	n/a	n/a	Oilless/Hermetic Purge
OFF	n/a	n/a	n/a	n/a	Purifier Purge

Table 8 - Settings for DIP Switches 2 and 3 Switch Block S9

Switch Block S9 DIP Switches					Corresponding Unit Identification
1	2	3	4	5	
n/a	ON	OFF	n/a	n/a	CVHE or CVHB (CFC- 11/ HCFC-123)
n/a	OFF	OFF	n/a	n/a	CVHE or CVHB (ASME CFC-11/HCFC-123)

CVHE Units = Design Sequence "1C" or later, and;
CVHB Units = Design Sequence "1D" or later, and;
CVHF Units = All units w/UCP695

The position of DIP Switch No. 4 on switch block S9 (Figures 4 and 5a) determines the range of adjustability for the chilled water and evaporator refrigerant "trip" point potentiometers as shown in Table 9:

Table 9 - Settings for DIP Switch 4 On Switch Block S9

Switch Block S9 DIP Switches					Corresponding Temperature Range
1	2	3	4	5	
n/a	n/a	n/a	ON	n/a	Standard
n/a	n/a	n/a	OFF	n/a	Extended

The standard temperature range for the chilled water setpoint is 37 F to 60 F, and that of the evaporator refrigerant "trip" point is 29 F to 34 F. When the extended temperature range function is enabled, however, these control ranges are expanded to include 20 F to 70 F for the chilled water setpoint, and 0 F to 34 F for the evaporator refrigerant "trip" point.

Caution: DIP Switch No. 4 should be ON unless the unit is designed to operate beyond the standard temperature range. Improper chiller operation at "extended temperature range" conditions may result in catastrophic equipment failure!

English or SI Unit-of-Measure

DIP Switch No. 5 of switch block S9 (Figure 4 and 5a) determines whether the temperatures shown on the micro module's display are indicated in degrees F or degrees C. See Table 10 below:

Table 10 - Settings for DIP Switch 5 On Switch Block S9

Switch Block S9 DIP Switches					Corresponding Units-of-Measure
1	2	3	4	5	
n/a	n/a	n/a	n/a	ON	English (Degrees F)
n/a	n/a	n/a	n/a	OFF	SI (Degrees C)

Note: DIP Switch No. 5 should remain in the "ON" position for all domestic chiller applications.

Switch Block S3: Acceleration Time; Frequency; Phase Imbalance/Surge Protection

Maximum Acceleration Time

The positions of DIP Switch Nos. 1 through 5 on switch block S3 (Figure 5b) determine the maximum length of time which will be allowed for transition to occur. (Acceleration time is measured from compressor motor start to transition — that is, the point at which inrush current is reduced to 85% of RLA.) Following are "trip" setpoint specifications for the maximum acceleration time function:

[ ] Adjustment Range:
6 seconds minimum to 65 seconds maximum

[ ] Adjustment Resolution:
3 seconds minimum

[ ] Timing Accuracy:
2.5 Seconds

Figure 5b - Acceleration Time/Electrical Frequency/ Surge Protection DIP Switch Block (S3)

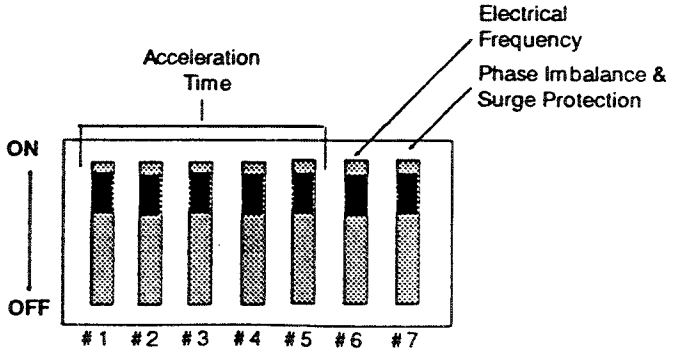

Note: See Figure 2, Page 12 for DIP Switch Locations.

Note: Though this setpoint is factory-adjusted (i.e., based on starter type and available starting torque), it may be necessary to modify this setting in the field. Acceleration times and DIP switch settings are given in Table 11. Recommended maximum acceleration times for various starter types are as follows:

27 seconds for "star-delta" starters;
16 seconds for "auto-transformer" starters;
11 seconds for "primary reactor" starters
6 seconds for "across-the-line" starters.

Table 11
Available Max. Acceleration Time Settings for Switches 1- 5 On Switch Block S3 *(Note 1)*

Switch Block S3 DIP Switches					Corresponding Maximum Acceleration Time
1	2	3	4	5	
ON	ON	ON	ON	ON	6 Seconds
ON	ON	ON	ON	OFF	9 Seconds
ON	ON	ON	OFF	ON	11 Seconds
ON	ON	ON	OFF	OFF	13 Seconds
ON	ON	OFF	ON	ON	16 Seconds
ON	ON	OFF	ON	OFF	18 Seconds
ON	ON	OFF	OFF	ON	20 Seconds
ON	ON	OFF	OFF	OFF	23 Seconds
ON	OFF	ON	ON	ON	25 Seconds
ON	OFF	ON	ON	OFF	27 Seconds
ON	OFF	ON	OFF	ON	30 Seconds
ON	OFF	ON	OFF	OFF	32 Seconds
ON	OFF	OFF	ON	ON	33 Seconds
ON	OFF	OFF	ON	OFF	35 Seconds
ON	OFF	OFF	OFF	ON	38 Seconds
ON	OFF	OFF	OFF	OFF	39 Seconds
OFF	ON	ON	ON	ON	41 Seconds
OFF	ON	ON	ON	OFF	43 Seconds
OFF	ON	ON	OFF	ON	46 Seconds
OFF	ON	ON	OFF	OFF	47 Seconds
OFF	ON	OFF	ON	ON	48 Seconds
OFF	ON	OFF	ON	OFF	50 Seconds
OFF	ON	OFF	OFF	ON	52 Seconds
OFF	ON	OFF	OFF	OFF	53 Seconds
OFF	OFF	ON	ON	ON	55 Seconds
OFF	OFF	ON	ON	OFF	57 Seconds
OFF	OFF	ON	OFF	ON	58 Seconds
OFF	OFF	ON	OFF	OFF	60 Seconds
OFF	OFF	OFF	ON	ON	61 Seconds
OFF	OFF	OFF	ON	OFF	62 Seconds
OFF	OFF	OFF	OFF	ON	64 Seconds
OFF	OFF	OFF	OFF	OFF	65 Seconds

Notes:
1. Switches 6 & 7 on S3 not shown in this table.
2. CT network accuracy is approx. ± 5 percent. Some adjustment may be needed.

Frequency Adjustment (50/60 Hz)

DIP Switch No. 6 on switch block S3 allows the UCM to accept either 50- or 60-hertz supply power, depending on its position See Table 12 below. This DIP switch must be configured to match incoming power.

Table 12 - Settings for DIP Switch 6 On Switch Block S3

Switch Block S3 DIP Switches							Corresponding Frequency
1	2	3	4	5	6	7	
n/a	n/a	n/a	n/a	n/a	ON	n/a	50 Hertz
n/a	n/a	n/a	n/a	n/a	OFF	n/a	60 Hertz

Note: DIP Switch No. 6 should remain in the "Off" position for all domestic chiller applications.

Phase Imbalance and Surge Protection

DIP Switch No. 7 of switch block S3 determines whether or not this motor protection function is operational. Refer to Table 13.

Table 13 - Settings for DIP Switch 7 On Switch Block S3

Switch Block S3 DIP Switches							Motor Protection Function Status
1	2	3	4	5	6	7	
n/a	n/a	n/a	n/a	n/a	n/a	ON	Overriden
n/a	n/a	n/a	n/a	n/a	n/a	OFF	Operational

Note: DIP Switch No. 7 should remain in the "Off" position. However, if job site conditions cause nuisance "trips", this protection may be overridden temporarily until the problem is diagnosed and corrected.

Switch Block S1: Rated-Load-Amps (RLA) Setpoint

The RLA setpoint is factory-set using DIP Switch Nos. 1 through 8 of switch block S1 (Figure 3, page 12), and is based on nameplate RLA, current transformer ratio selection, and other design constants. Since all eight switches on switch block S1 are used, it is not illustrated here. Though the RLA setpoint is both accessible and resettable, field adjustment is discouraged. RLA "trip" point is based on current transformer (CT) selection. Adjustment resolution is 1% of RLA minimum. To determine the appropriate DIP switch setting combination, review the data provided in Tables 14 and 15. Use Steps 1 through 5 that follow — along with Table 14 — to determine the appropriate RLA "factor" for your unit; then locate that "factor" in Table 15 to verify that the factory-set S1 DIP switch arrangement is correct.

1. Check the unit nameplate (or design specifications) to establish the chiller's RLA.

2. Determine the appropriate "meter scale" value from Table 14. To do this, compare the unit RLA with the RLA range values in Table 14; select the appropriate RLA range and read across the table to find the corresponding meter scale value.

3. Use the following equation to determine the "RLA factor":

$$\text{RLA Factor} = \frac{\text{RLA} \times 1.4}{\text{Meter Scale}}$$

4. Use Table 15 to find the S1 DIP switch settings that correspond to the RLA factor determined in Step 3.

Note: Select the RLA factor in Table 15 that is closest to the RLA factor calculated in Step 3.

5. Compare the DIP switch settings identified in Table 15 (See "Step 4") with the factory-set S1 DIP switch setting combination.

Table 14
Unit RLA Meter Scale Conversion

RLA Range	CT Ratio (1)	Primary Turns (2)	Meter Scale (3)
28.6 to 35.7	150 : 5	3	50
35.8 to 42.8	180 : 5	3	60
42.9 to 53.5	150 : 5	2	75
53.6 to 64.2	180 : 5	2	90
64.3 to 71.4	200 : 5	2	100
71.5 to 89.2	250 : 5	2	125
89.3 to 107.1	150 : 5	1	150
107.2 to 128.5	180 : 5	1	180
128.6 to 142.8	200 : 5	1	200
142.9 to 178.5	250 : 5	1	250
178.6 to 214.2	300 : 5	1	300
214.3 to 250.0	350 : 5	1	350
250.1 to 285.7	400 : 5	1	400
285.8 to 357.1	500 : 5	1	500
357.2 to 428.5	600 : 5	1	600
428.6 to 500.0	700 : 5	1	700
500.1 to 571.4	800 : 5	1	800
571.5 to 714.2	1000 : 5	1	1000
714.3 to 857.1	1200 : 5	1	1200
857.2 to 1071.4	1500 : 5	1	1500
1071.5 to 1285.7	1800 : 5	1	1800
1285.8 to 1500.0	2100 : 5	1	2100
1500.1 to 1785.7	2500 : 5	1	2500

Notes:
1. The CT ratio represents the size of the current transformers used with the specified RLA range.
2. Each "primary turns" (PRI) value indicates the number of time that the main power line passes through its current transformer.

Examples: PRI = 1 PRI = 2

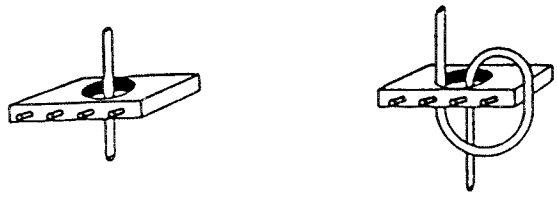

3. If ampmeters are used with the CTs, their full-scale deflection will equal the "meter scale" values in this table.

Note: Meter Scale = $\frac{\text{CT Ratio (1)}}{\text{Primary Turns}}$

Table 15
RLA Factors/S1 DIP Switch Settings Conversion

RLA Factor	Switch Block S1 DIP Switches								RLA Factor	Switch Block S1 DIP Switches							
	1	2	3	4	5	6	7	8		1	2	3	4	5	6	7	8
0.799964	OFF	OFF	OFF	OFF	OFF	OFF	OFF	OFF	0.842654	OFF	ON	OFF	OFF	OFF	OFF	OFF	OFF
0.801220	OFF	OFF	OFF	OFF	OFF	OFF	OFF	ON	0.844050	OFF	ON	OFF	OFF	OFF	OFF	OFF	ON
0.802480	OFF	OFF	OFF	OFF	OFF	OFF	ON	ON	0.845450	OFF	ON	OFF	OFF	OFF	OFF	ON	ON
0.803743	OFF	OFF	OFF	OFF	OFF	ON	OFF	ON	0.846855	OFF	ON	OFF	OFF	OFF	ON	OFF	ON
0.805011	OFF	OFF	OFF	OFF	OFF	ON	ON	ON	0.848265	OFF	ON	OFF	OFF	OFF	ON	ON	ON
0.805022	OFF	OFF	OFF	OFF	ON	OFF	OFF	OFF	0.848278	OFF	ON	OFF	OFF	ON	OFF	OFF	OFF
0.806294	OFF	OFF	OFF	OFF	ON	OFF	OFF	ON	0.849692	OFF	ON	OFF	OFF	ON	OFF	OFF	ON
0.807570	OFF	OFF	OFF	OFF	ON	OFF	ON	ON	0.851112	OFF	ON	OFF	OFF	ON	OFF	ON	ON
0.808850	OFF	OFF	OFF	OFF	ON	ON	OFF	ON	0.852536	OFF	ON	OFF	OFF	ON	ON	OFF	ON
0.810134	OFF	OFF	OFF	OFF	ON	ON	ON	ON	0.853965	OFF	ON	OFF	OFF	ON	ON	ON	ON
0.810180	OFF	OFF	OFF	ON	OFF	OFF	OFF	OFF	0.854016	OFF	ON	OFF	ON	OFF	OFF	OFF	OFF
0.811468	OFF	OFF	OFF	ON	OFF	OFF	OFF	ON	0.855450	OFF	ON	OFF	ON	OFF	OFF	OFF	ON
0.812761	OFF	OFF	OFF	ON	OFF	OFF	ON	ON	0.856889	OFF	ON	OFF	ON	OFF	OFF	ON	ON
0.814058	OFF	OFF	OFF	ON	OFF	ON	OFF	ON	0.858333	OFF	ON	OFF	ON	OFF	ON	OFF	ON
0.815359	OFF	OFF	OFF	ON	OFF	ON	ON	ON	0.859782	OFF	ON	OFF	ON	OFF	ON	ON	ON
0.815370	OFF	OFF	OFF	ON	ON	OFF	OFF	OFF	0.859794	OFF	ON	OFF	ON	ON	OFF	OFF	OFF
0.816676	OFF	OFF	OFF	ON	ON	OFF	OFF	ON	0.861248	OFF	ON	OFF	ON	ON	OFF	OFF	ON
0.817985	OFF	OFF	OFF	ON	ON	OFF	ON	ON	0.862707	OFF	ON	OFF	ON	ON	OFF	ON	ON
0.819299	OFF	OFF	OFF	ON	ON	ON	OFF	ON	0.864171	OFF	ON	OFF	ON	ON	ON	OFF	ON
0.820220	OFF	OFF	OFF	ON	OFF	OFF	OFF	OFF	0.865198	OFF	ON	ON	OFF	OFF	OFF	OFF	OFF
0.820617	OFF	OFF	OFF	ON	ON	ON	ON	ON	0.865640	OFF	ON	OFF	ON	ON	ON	ON	ON
0.821541	OFF	OFF	ON	OFF	OFF	OFF	OFF	ON	0.866670	OFF	ON	ON	OFF	OFF	OFF	OFF	ON
0.822867	OFF	OFF	ON	OFF	OFF	OFF	ON	ON	0.868148	OFF	ON	ON	OFF	OFF	OFF	ON	ON
0.824197	OFF	OFF	ON	OFF	OFF	ON	OFF	ON	0.869631	OFF	ON	ON	OFF	OFF	ON	OFF	ON
0.825531	OFF	OFF	ON	OFF	OFF	ON	ON	ON	0.871119	OFF	ON	ON	OFF	OFF	ON	ON	ON
0.825543	OFF	OFF	ON	OFF	ON	OFF	OFF	OFF	0.871132	OFF	ON	ON	OFF	ON	OFF	OFF	OFF
0.826881	OFF	OFF	ON	OFF	ON	OFF	OFF	ON	0.872625	OFF	ON	ON	OFF	ON	OFF	OFF	ON
0.828224	OFF	OFF	ON	OFF	ON	OFF	ON	ON	0.874123	OFF	ON	ON	OFF	ON	OFF	ON	ON
0.829572	OFF	OFF	ON	OFF	ON	ON	OFF	ON	0.875627	OFF	ON	ON	OFF	ON	ON	OFF	ON
0.830924	OFF	OFF	ON	OFF	ON	ON	ON	ON	0.877136	OFF	ON	ON	OFF	ON	ON	ON	ON
0.830972	OFF	OFF	ON	ON	OFF	OFF	OFF	OFF	0.877189	OFF	ON	ON	ON	OFF	OFF	OFF	OFF
0.833228	OFF	OFF	ON	ON	OFF	OFF	OFF	ON	0.878704	OFF	ON	ON	ON	OFF	OFF	OFF	ON
0.833689	OFF	OFF	ON	ON	OFF	OFF	ON	ON	0.880223	OFF	ON	ON	ON	OFF	OFF	ON	ON
0.835055	OFF	OFF	ON	ON	OFF	ON	OFF	ON	0.881748	OFF	ON	ON	ON	OFF	ON	OFF	ON
0.836425	OFF	OFF	ON	ON	OFF	ON	ON	ON	0.883278	OFF	ON	ON	ON	OFF	ON	ON	ON
0.836437	OFF	OFF	ON	ON	ON	OFF	OFF	OFF	0.883292	OFF	ON	ON	ON	ON	OFF	OFF	OFF
0.837812	OFF	OFF	ON	ON	ON	OFF	OFF	ON	0.884828	OFF	ON	ON	ON	ON	OFF	OFF	ON
0.839192	OFF	OFF	ON	ON	ON	OFF	ON	ON	0.886369	OFF	ON	ON	ON	ON	OFF	ON	ON
0.840576	OFF	OFF	ON	ON	ON	ON	OFF	ON	0.887916	OFF	ON	ON	ON	ON	ON	OFF	ON
0.841964	OFF	OFF	ON	ON	ON	ON	ON	ON	0.889468	OFF	ON	ON	ON	ON	ON	ON	ON

Table 15 (Cont'd.)
RLA Factors/S1 DIP Switch Settings
Conversion

RLA Factor	Switch Block S1 DIP Switches								RLA Factor	Switch Block S1 DIP Switches							
	1	2	3	4	5	6	7	8		1	2	3	4	5	6	7	8
0.890515	ON	OFF	OFF	OFF	OFF	OFF	OFF	OFF	0.943922	ON	ON	OFF	OFF	OFF	OFF	OFF	OFF
0.892076	ON	OFF	OFF	OFF	OFF	OFF	OFF	ON	0.945680	ON	ON	OFF	OFF	OFF	OFF	OFF	ON
0.893643	ON	OFF	OFF	OFF	OFF	OFF	ON	ON	0.947444	ON	ON	OFF	OFF	OFF	OFF	ON	ON
0.895216	ON	OFF	OFF	OFF	OFF	ON	OFF	ON	0.949214	ON	ON	OFF	OFF	OFF	ON	OFF	ON
0.896794	ON	OFF	OFF	OFF	OFF	ON	ON	ON	0.950992	ON	ON	OFF	OFF	OFF	ON	ON	ON
0.896808	ON	OFF	OFF	OFF	ON	OFF	OFF	OFF	0.951008	ON	ON	OFF	OFF	ON	OFF	OFF	OFF
0.898392	ON	OFF	OFF	OFF	ON	OFF	OFF	ON	0.952792	ON	ON	OFF	OFF	ON	OFF	OFF	ON
0.899981	ON	OFF	OFF	OFF	ON	OFF	ON	ON	0.954583	ON	ON	OFF	OFF	ON	OFF	ON	ON
0.901577	ON	OFF	OFF	OFF	ON	ON	OFF	ON	0.956381	ON	ON	OFF	OFF	ON	ON	OFF	ON
0.903178	ON	OFF	OFF	OFF	ON	ON	ON	ON	0.958185	ON	ON	OFF	OFF	ON	ON	ON	ON
0.903234	ON	OFF	OFF	ON	OFF	OFF	OFF	OFF	0.958249	ON	ON	OFF	OFF	OFF	OFF	OFF	OFF
0.904841	ON	OFF	OFF	ON	OFF	OFF	OFF	ON	0.960061	ON	ON	OFF	OFF	OFF	OFF	OFF	ON
0.906454	ON	OFF	OFF	ON	OFF	OFF	ON	ON	0.961880	ON	ON	OFF	ON	OFF	OFF	ON	ON
0.908073	ON	OFF	OFF	ON	OFF	ON	OFF	ON	0.963706	ON	ON	OFF	ON	OFF	ON	OFF	ON
0.909697	ON	OFF	OFF	ON	OFF	ON	ON	ON	0.965539	ON	ON	OFF	ON	OFF	ON	ON	ON
0.909712	ON	OFF	OFF	ON	ON	OFF	OFF	OFF	0.965555	ON	ON	OFF	ON	ON	OFF	OFF	OFF
0.911342	ON	OFF	OFF	ON	ON	OFF	OFF	ON	0.967395	ON	ON	OFF	ON	ON	OFF	OFF	ON
0.912979	ON	OFF	OFF	ON	ON	OFF	ON	ON	0.969242	ON	ON	OFF	ON	ON	OFF	ON	ON
0.914621	ON	OFF	OFF	ON	ON	ON	OFF	ON	0.971097	ON	ON	OFF	ON	ON	ON	OFF	ON
0.916270	ON	OFF	OFF	ON	ON	ON	ON	ON	0.972958	ON	ON	OFF	ON	ON	ON	ON	ON
0.915773	ON	OFF	ON	OFF	OFF	OFF	OFF	OFF	0.972397	ON	ON	ON	OFF	OFF	OFF	OFF	OFF
0.917426	ON	OFF	ON	OFF	OFF	OFF	OFF	ON	0.974264	ON	ON	ON	OFF	OFF	OFF	OFF	ON
0.919084	ON	OFF	ON	OFF	OFF	OFF	ON	ON	0.976138	ON	ON	ON	OFF	OFF	OFF	ON	ON
0.920749	ON	OFF	ON	OFF	OFF	ON	OFF	ON	0.978019	ON	ON	ON	OFF	OFF	ON	OFF	ON
0.922420	ON	OFF	ON	OFF	OFF	ON	ON	ON	0.979907	ON	ON	ON	OFF	OFF	ON	ON	ON
0.922435	ON	OFF	ON	OFF	ON	OFF	OFF	OFF	0.979924	ON	ON	ON	OFF	ON	OFF	OFF	OFF
0.924112	ON	OFF	ON	OFF	ON	OFF	OFF	ON	0.981820	ON	ON	ON	OFF	ON	OFF	OFF	ON
0.925795	ON	OFF	ON	OFF	ON	OFF	ON	ON	0.983723	ON	ON	ON	OFF	ON	OFF	ON	ON
0.927485	ON	OFF	ON	OFF	ON	ON	ON	OFF	0.985634	ON	ON	ON	OFF	ON	ON	OFF	ON
0.929180	ON	OFF	ON	OFF	ON	ON	ON	ON	0.987553	ON	ON	ON	OFF	ON	ON	ON	ON
0.929241	ON	OFF	ON	ON	OFF	OFF	OFF	OFF	0.987621	ON	ON	ON	ON	OFF	OFF	OFF	OFF
0.930943	ON	OFF	ON	ON	OFF	OFF	OFF	ON	0.989547	ON	ON	ON	ON	OFF	OFF	OFF	ON
0.932652	ON	OFF	ON	ON	OFF	OFF	ON	ON	0.991481	ON	ON	ON	ON	OFF	OFF	ON	ON
0.934367	ON	OFF	ON	ON	OFF	ON	OFF	ON	0.993423	ON	ON	ON	ON	OFF	ON	OFF	ON
0.936088	ON	OFF	ON	ON	OFF	ON	ON	ON	0.995372	ON	ON	ON	ON	OFF	ON	ON	ON
0.936103	ON	OFF	ON	ON	ON	OFF	OFF	OFF	0.995389	ON	ON	ON	ON	ON	OFF	OFF	OFF
0.937831	ON	OFF	ON	ON	ON	OFF	OFF	ON	0.997347	ON	ON	ON	ON	ON	OFF	OFF	ON
0.939566	ON	OFF	ON	ON	ON	OFF	ON	ON	0.999312	ON	ON	ON	ON	ON	OFF	ON	ON
0.941307	ON	OFF	ON	ON	ON	ON	OFF	ON	1.001284	ON	ON	ON	ON	ON	ON	OFF	ON
0.943054	ON	OFF	ON	ON	ON	ON	ON	ON	1.003265	ON	ON	ON	ON	ON	ON	ON	ON

Micro Module (1U3) Input Connections (and Terminal Designations)

All electrical connections made at micro module 1U3 are low voltage (i.e., 30 volts AC or less); never connect wires carrying more than 30 volts to terminal strips 1TB6, 1TB3 or 1TB4. Further, never route wiring carrying voltages exceeding 30 volts through the upper half of the unit control panel!

Caution: Connecting any device or wiring that carries more than 30 volts to 1TB6, 1TB3 or 1TB4 will destroy micro module 1U3.

Terminal strip connections for the micro module are illustrated in Figures 6 and 7 and described in the following paragraphs. Terminal strip 1TB3, -4, and, -6 locations are shown in these figures also.

Terminal Strip 1TB6

Bidirectional Communications Link (1TB6-1, -2)

This connection port is provided for a twisted-pair communications link; this link may be with another machine, or with a higher level control panel (e.g., an SCP699 system control panel).

Note: There are no polarity requirements when connecting communication wires.

Terminal Strip 1TB3

Note: See the individual sensor checkout procedures in "Troubleshooting With Diagnostics" for a breakdown of temperature and pressure input accuracies; only "displayed" accuracies are indicated below.

Leaving Evaporator Water Temperature Sensor (1TB3-1, -2)

Standard thermistor 4RT1, which monitors the temperature of the chilled water leaving the unit, is connected to these terminals.
Sensor and input specifications are as follows:

[ ] Operating Range:
    15 F to 90 F.
[ ] Displayed Accuracy:
    ± 1.5 F from 20 F thru 70 F;
    ± 2.5 F from 70 F thru 90 F; and,
    ± 2.5 F from 15 F thru 20 F.
[ ] Indication:
    At front panel display (i.e., Item **"F"** of operator's menu).
[ ] Shorted:
    No diagnostic; display reads "—".
[ ] Open:
    Diagnostic: **b Ab**.
[ ] Leaving Water Temperature Low Limit:
    35.3 F for standard-range units only.

Figure 6
Micro Module 1U3 Input Connections

This drawing is typical of:
CVHE units = Design Sequence "1C" and later;
CVHB units = Design Sequence "1D" and later;
CVHF units = All units with UCP695.

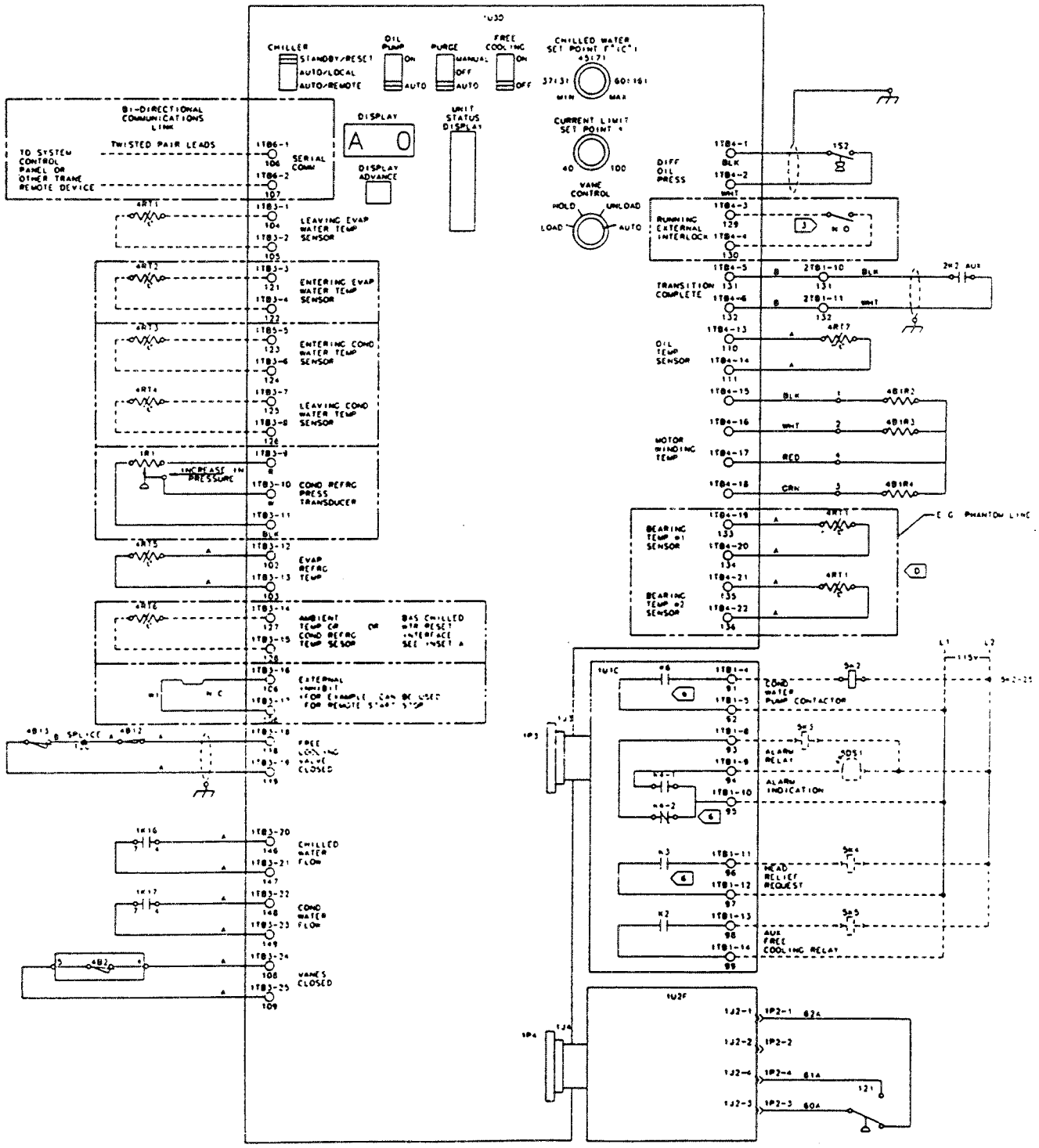

WARNING! Disconnect electrical power supply to prevent injury or death due to electrical shock.

Notes:
1. Terminals 1TB3-16, -17 must be jumpered if external interlock is not used.
2. 1TB3, 1TB4 and 1TB6 are located below the micro module faceplate (Figure 2, page 12).
3. Solid lines indicate Trane wiring: dashed lines (- - - -) represent field wiring; and, phantom lines(— - - —) enclose optional features.

Drg. X39470576D

Note: The UCP's "differential-to-stop" criteria are typically used to cycle off the chiller--not this "low limit" function! Notice, too, that the "Cooling Required" status indicator light goes out when a "low limit" occurs; no diagnostic is generated.

Entering Evaporator Water Temperature Sensor (1TB3-3, -4)

The optional thermistor (4RT2) connected to these terminals monitors the temperature of the chilled water entering the unit.
Sensor and input specifications are as follows:

[ ] Operating Range:
15 F to 90 F

[ ] Displayed Accuracy:
± 1.5 F from 20 F to 70 F;
± 2.5 F from 70 F to 90 F; and,
± 2.5 F from 15 F to 20 F.

[ ] Indication:
At front panel display (i.e., Item "E" of operator's menu).

[ ] Shorted:
No diagnostic; display reads "—".

[ ] Open:
No diagnostic; display reads "—".

Spare Temperature Sensors (1TB3-5, -6; 1TB3-7, -8)

Thermistors (i.e., 4RT3 and 4RT4) connected to terminals 5 through 8 on 1TB3 are optional. These "spare temperature" inputs are expected to be used for monitoring entering (1TB3-5, 1TB3-6) and leaving (1TB3-7, 1TB3-8) condenser water temperatures. Actual sensor temperatures can then be viewed on the UCP display (i.e., menu item "H" for entering condenser water, and "J" for leaving condenser water).
Sensor and input specifications follow:

[ ] Operating Range:
30 F to 140 F

[ ] Displayed Accuracy:
± 1.8 F from 60 F to 110 F;
± 2.5 F from 30 F to 60 F; and,
± 2.5 F from 110 F to 140 F.

[ ] Indication:
At front panel display (i.e., Items "H" and "J" of operator's menu).

[ ] Shorted:
No diagnostic; display reads "—".

[ ] Open:
No diagnostic; display reads "—".

Condenser Refrigerant Pressure Transducer (1TB3-9, -10, -11)

This optional pressure transducer (1R1) is mounted inside the unit control panel (Figure 7), and is "T'd" into the condenser gauge line. Transducer output is of the 3-wire, variable resistance type. To assure proper operation, these 3 wires must be connected to terminals 9, 10 and 11 of 1TB3 in the order illustrated in Figure 6.
Pressure transducer and input specifications follow:

Figure 7
Typical UCP695 Panel Components (See 'Notes')

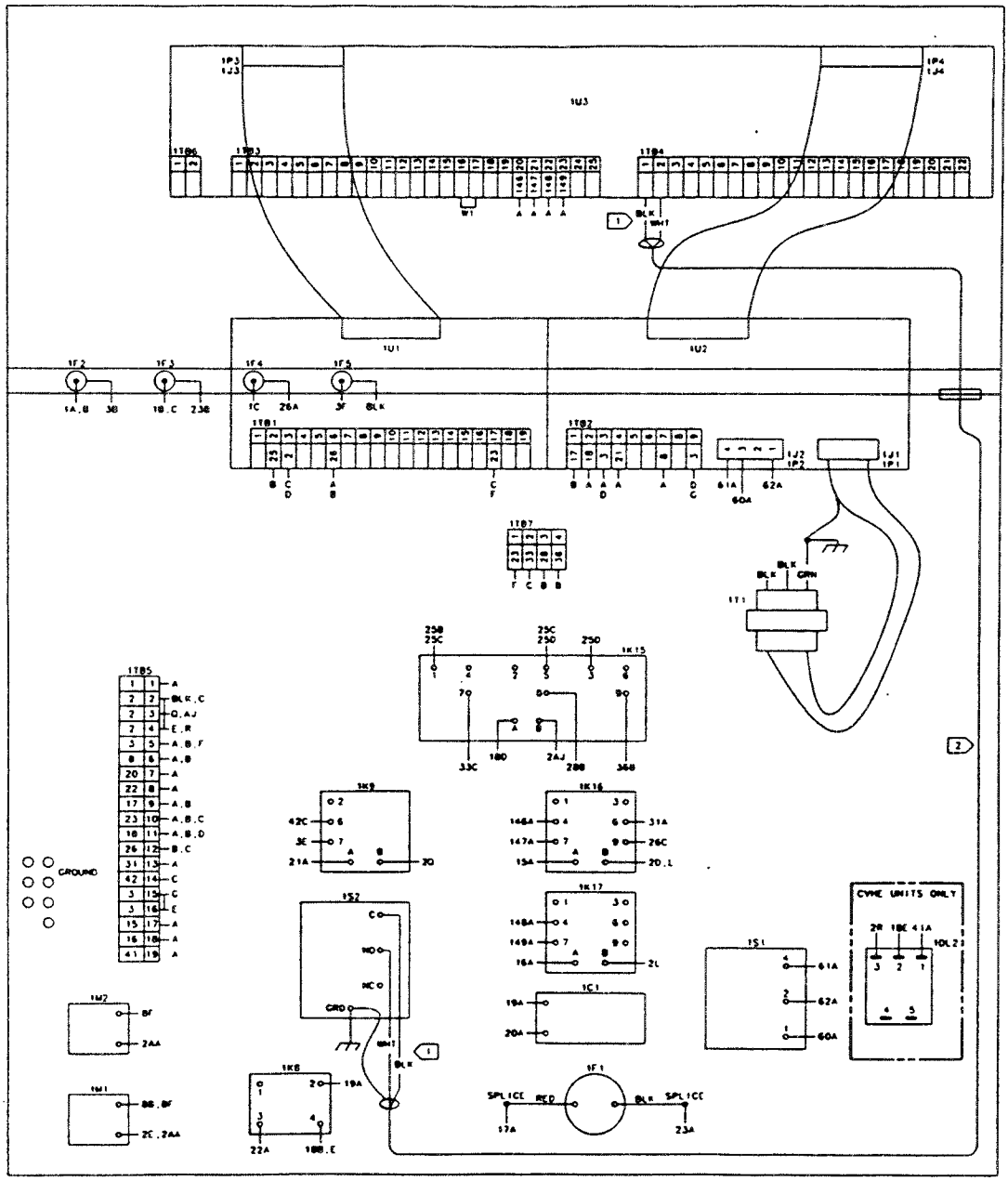

Notes:
1. Hot gas bypass unit shown.
2. This drawing typical of: CVHE - design sequence "1C" and later; CVHB - design sequence "1D" and later; CVHF - all designs w/UCP695. Refer to appropriate wiring manual for earlier designs.

LEGEND		
1C1 = Oil Pump Capacitor	1K17 = Condenser Water Pump Relay	1TB4 = Terminal Blk - Micro-Module Input
1DL2 = Vent Line Interval Timer	1M1 = Hourmeter	1TB5 = Terminal Block - Control Panel
1F1 = Oil Pump Fuse	1M2 = Start Counter (Meter)	1TB6 = Terminal Blk - Micro-Module Input
1F2-5 = Branch Circuit Fuses	1S1 = Condenser High Pressure Switch	1TB7 = Terminal Block - Hot Gas Bypass
1J1-4/1P1-4 = Post Header Power Supply	1S2 = Oil Pressure Switch	1U1 = Relay Output Module
1K6 = Oil Pump Start Relay	1T1 = Power Supply Transformer	1U2 = Power Supply Output Module
1K9 = Oil Tank Heater Relay	1TB1 = Terminal Block - Relay Output	1U3 = Micro Module
1K15 = Hot Gas Bypass Relay	1TB2 = Terminal Block - Power Supply	
1K16 = Chilled Water Pump Relay	1TB3 = Terminal Blk - Micro-Module Input	

[ ] Operating Range:
0 psig to 25 psig; see sensor checkout in "Troubleshooting With Diagnostics" for accuracies.
[ ] Indication:
None.
[ ] Shorted (1TB3-10 to -11):
Diagnostic **b AC**.
[ ] Open:
No diagnostic.

Evaporator Refrigerant Temperature Sensor (1TB3-12, -13)

This standard thermistor (4RT5) monitors evaporator refrigerant temperature. Following are sensor and input specifications:

[ ] Operating Range:
- 5 F to 150 F
[ ] Displayed Accuracy:
± 1.0 F at 29.0 F;
± 1.5 F at 30.0 F;
± 2.5 F from 0 F thru 28 F;
± 2.5 F from 31 F thru 34 F;
± 5.5 F from -5 F thru -1 F; and,
± 5.5 F from 35 F thru 40 F

As indicated by Table 1, page 8, the UCP displays evaporator refrigerant temperatures ranging from -4 F thru 42 F. See sensor checkout in "Troubleshooting With Diagnostics" for accuracies outside the display range.

[ ] Indication:
At front panel display (i.e., Item "__" of serviceman's menu).
[ ] Shorted:
Diagnostic **b Ad**; must not trip < 150 F.
[ ] Open:
Diagnostic **b Ad**; must not trip > -5 F.

Condenser Refrigerant Temperature Sensor; Ambient Temperature Sensor; Generic BAS Analog Input (1TB3-14, -15)

These three options are mutually exclusive of each other; that is, only one of these options can be functional at any given time. Actual sensor temperatures can be viewed on the UCP display as operator's menu item **"L"** on these units:

— CHVE Units = Design Sequence "1C" and later;
— CVHB Units = Design Sequence "1D" and later;
— CVHF Units = All units w/UCP695.

This display item is not available on earlier-design units.

CONDENSER REFRIGERANT TEMPERATURE SENSOR. This optional, field-installed thermistor (4RT6) must be used if the chiller is controlled by an SCP699 that is utilizing the SCP's "condenser limit" option. If this is done, these terminals cannot be used for an ambient sensor input or for a Generic BAS input. Refer to the SCP installation and operation literature.

AMBIENT TEMPERATURE SENSOR. This optional, field-installed thermistor (4RT6) is used with the optional, ambient-based, chilled water reset function.

GENERIC BAS ANALOG INPUT. This optional, interface device, designated the 1U4, is used to perform chilled water reset at the chiller level, based on a 0-10 VDC (or 4-20 mA) control signal issued by a generic BAS. This signal is translated into an "ambient temperature" input that the UCP uses to calculate a new chilled water setpoint. Sensor and input specifications follow:

[ ] Operating Range:
    -40 F to 150 F; see sensor checkout in "Troubleshooting With Diagnostics" for accuracies.
[ ] Indication:
    None
[ ] Shorted:
    Diagnostic **b AE**; must not trip < 150 F.
[ ] Open:
    No diagnostic.

External Interlock; External Inhibit (Remote On/Off Control) (1TB3-16, -17)

The external interlock input feature was provided on these units:

— CVHE Units = Design Sequence "1B" and earlier only, and;
— CVHB Units = Design Sequence "1C" and earlier only.

On later design units, the function of these terminals was changed to "External Inhibit". The external inhibit feature is provided on these chillers:

— CVHE Units = Design Sequence "1C" and later;
— CVHB Units = Design Sequence "1D" and later;
— CVHF Units = All units w/UCP695.

EXTERNAL INTERLOCK. Terminals 16 and 17 of 1TB3 accept a 2-position switch input used to indicate a system fault detected by a customer-supplied remote device . As long as the switch is closed (i.e., "shorted"), unit operation continues normally. However, if the micro module detects that this switch is open, it shuts down unit operation on latching diagnostic **b Fd**.

EXTERNAL INHIBIT. Terminals 16 and 17 of 1TB3 accept a 2-position switch input used to provide a chiller On/Off function from a customer-supplied remote controller and will allow an automatic chiller restart from the same controller. As long as these contacts remain closed, the chiller will run normally. If the contacts open, however, the chiller will go through its' shutdown cycle and remain off until the contacts reopen. When the chiller has shutdown on input at these terminals, the UCP will display operating code **A 100**, indicating that the external inhibit function is energized.

Note: Refer to Figure 7; notice that the unit ships from the factory with a jumper installed between the external interlock/external inhibit terminals. The unit will not operate unless Terminals 1TB3-16 and 1TB3-17 are shorted.. External interlock/external inhibit input specifications follow:

[ ] Circuit is monitored by a 12 VDC, 45 mA current.

[ ] Customer-supplied devices connected to these terminals must be compatible with current described above; gold-plated contacts are recommended to avoid oxidation resistance.

Note: Use an isolation relay to limit electrical noise interference, and to reduce the possibility of feeding voltage into micro module 1U3.

Free Cooling Valve Proof-of-Closure (1TB3-18, -19)

These terminals--used only on units equipped with the free cooling option--monitor the end switches on the free cooling valves to provide proof of valve closure. When this input is shorted, the free cooling valves are closed. If one or both of the free cooling valves are partially or fully open when the chiller is starting or running in the powered cooling mode, 1U3 responds to this open input by initiating latching diagnostic **b F9** to shut down unit operation. Specifications for the "free cooling valve closed" input are as follows:

[ ] The interlock circuit is monitored by a 12 VDC, 45 mA current.

Proof of Chilled Water Flow (1TB3-20, -21)

These terminals monitor the status of the chilled water pump relay (1K16) contacts.

If the contacts of 1K16 are closed (i.e., terminals 1TB3-20 and -21 are shorted), proof of closure is signalled by the illumination of the "chilled water flow" status indicator light. (These contacts must only close when there is actually chilled water flow--i.e., both chilled water flow switch 5S2 and auxiliary chilled water pump contactor 5K1 are closed.)

If 1K16's contacts are open, the input at terminals 1TB3-20 and -21 should also be open and the "chilled water flow" status indicator light off. Nonlatching diagnostic **b Ed** is generated if the chiller switch is set at one of the "Auto" positions and a start-up is attempted at this time. (The UCM will not generate a **b Ed** diagnostic if the chiller switch is set at STANDBY/RESET.)

Note: 1K16's contacts must open whenever the chilled water flow rate is either below the minimum acceptable level, or nonexistent (i.e., 5S2 or 5K1 are open).

Remember that the customer-supplied flow/pressure switch and pump interlock circuit must be connected to terminals 1TB5-14 and 1TB5-16 in the high-voltage section of the unit control panel; this circuit powers chilled water pump relay 1K16.

Caution: Do not connect the 120V flow switch interlock circuit to terminals 1TB3-20 and -21, or micro module 1U3 will be damaged.

Proof of Condenser Water Flow (1TB3-22, -23)

These terminals monitor the status of the condenser water pump relay (1K17) contacts.

If the contacts of 1K17 are closed (i.e., input terminals 1TB3-22 and -23 are shorted), proof of closure is signalled by advancement from operating code **A 71** (i.e., "establish condenser water flow") to **A 72** (i.e., "start").

Note: 1K17's contacts must only close when there is actually condenser water flow (i.e., proven by closure of both condenser water flow switch 5S3 and auxiliary condenser water pump contactor 5K2).

If 1K17's contacts are open, the input at terminals 1TB3-22 and -23 should also be open. In the event that condenser water flow is lost during chiller operation, the unit is shut down on nonlatching diagnostic **b F7** and a restart is attempted. Latching diagnostic **b dC** is generated if condenser water flow is not established within 3 minutes of initiation of operating mode **A 71**.

Note: 1K17's contacts must open whenever condenser water flow is either below the minimum acceptable rate, or nonexistent (i.e., both 5S3 and 5K2 are open).

Remember that the customer-supplied flow/pressure switch and pump interlock circuit must be connected to terminals 1TB5-15 and 1TB5-17 in the high-voltage section of the unit control panel; this circuit powers condenser water pump relay 1K17.

Caution: Do not connect the 120V flow switch interlock circuit to terminals 1TB3-22 and -23, or micro module 1U3 will be damaged beyond repair.

Proof of Inlet Vane Closure (1TB3-24, -25)

These terminals monitor the status of the "vanes closed" end switch on vane actuator motor 4B2. When the input at these terminals is shorted, the inlet vanes are fully closed; an open input indicates that the inlet vanes are either partially or fully open.

Micro module 1U3 checks the status of the inlet vanes during operating mode **A 71** (i.e., "establish condenser water flow"), and issues a "close" signal if they are open. Latching diagnostic **b FA** occurs if the vanes fail to close within 3 minutes.

Terminal Strip 1TB4

Differential Oil Pressure Switch 1S2 (1TB4-1, -2)

This terminal input (Figure 7, pg. 34) allows the micro module to monitor the status of the differential oil pressure switch (1S2) contacts. A shorted input at these terminals indicates that there is sufficient oil pressure available and 1S2's contacts are closed. If oil pressure is too low and 1S2's contacts are open, and the micro module detects an open input; chiller operation is shut down on latching diagnostic **b F2.**

Following is the specification for the differential oil pressure switch input to micro module 1U3:

[ ] The differential oil pressure switch circuit is monitored by a 12 VDC, 45 mA current.

Running External Interlock (1TB4-3, -4)

Terminals 3 and 4 of 1TB4 accept a switch input that indicates a system fault (i.e., detected by a customer-supplied remote device) requiring a unit shutdown. This function is only active when the unit is running and transition is complete.

Notice that as long as the micro finds an open input at Terminals 3 and 4, no fault is detected. If the input is shorted, however, a fault requiring unit shutdown occurred, and micro module 1U3 responds by initiating latching diagnostic condition **b F1**.

Specifications for the running external interlock input are as follows:

[ ] This fault circuit is monitored by a 12 VDC, 45 mA current.

[ ] Customer-supplied devices connected to these terminals must be compatible with the current described above; gold-plated contacts are recommended to avoid oxidation resistance.

Notes:
1. Use an isolation relay to limit noise interference, and to reduce the possibility of feeding voltage into micro module 1U3.
2. If the unit has hot gas bypass, discharge temperature switch 4S5 is connected to terminals 1TB4-3 and -4; this switch closes--yielding a "shorted" input-- if the discharge temperature exceeds 210 F.

"Transition Complete" Contacts (1TB4-5, -6)

This terminal input allows the micro module to monitor the main run starter contactor (2K2) to determine whether transition has occurred. A shorted input indicates that transition is complete, while an open input "tells" the micro that transition has not occurred.

Note: The shielded wire must be taped off at the 2K2 contacts and grounded to a ground lug provided in the starter panel (i.e., at the 2TB1 terminal strip end of these leads). These leads are not shielded between the starter panel and unit control panel.

Following is the specification for the "transition complete" input to micro module 1U3:

[ ] The "transition complete" circuit is monitored by a 12 VDC, 45 mA current.

3-Phase Current-Sensing Input (1TB4-7 thru -12)

These 6 terminals accept 3 AC signal inputs that are proportional to the compressor motor's AC current draw. Line current is stepped down by 2 sets of current transformers. Each set of current transformers contains 3 transformers; the first steps the line current down to a 0-5 amp signal, and the second further steps down the 0-5 amp signal to a milliamp (mA) signal.

Caution: Do not connect the 0-5 amp output signal of the primary transformer directly to micro module 1U3, or destruction of the module will result.

Following are specifications for the 3-phase current-sensing input:

[ ] Overall Accuracy:
15 to 140 ± 5% RLA

[ ] Open:
Diagnostic **b D9** (e.e., extended power loss),
Diagnostic **b E2** (i.e., momentary power loss), diagnostic **b E4** (i.e., phase loss), or diagnostic **b E5** (i.e., phase reversal).

Connections at terminals 7 through 12 are as follows:

[ ] Terminals 1TB4- 7 and - 8 are connected to secondary transformer 2T7 on L3.
[ ] Terminals 1TB4- 9 and -10 are connected to secondary transformer 2T6 on L2.
[ ] Terminals 1TB4-11 and -12 are connected to secondary transformer 2T5 on L1.

Note: It is essential that the correct polarity is maintained in all current transformer connections. Consult the appropriate starter wiring diagram to confirm that proper connection polarity is established.

Oil Temperature Sensor (1TB4-13, -14)

The temperature sensor that monitors oil sump temperature (i.e., thermistor 4RT7) is connected to these terminals.

Note: Remember that the oil temperature setting is not adjustable.

Specifications for the oil temperature sensor input are as follows:

[ ] Operating Range:
32 F to 180 F

[ ] Shorted:
Diagnostic **b A9**; must not trip < 180 F.

[ ] Open:
Diagnostic **b A9**; must not trip > 32 F.

[ ] Oil Heater Control:
140 F = "enable" point.
145 F = "off" point.
[ ] High Temperature Run Inhibit "Off" Point:
180 F; results in a latching diagnostic of **b F4**.

Motor Winding Temperature Sensors (1TB4-15 thru -18)

The leads of the 3 temperature sensors (4B1R2, 4B1R3, 4B1R4) imbedded in the compressor motor windings are connected to these input terminals. Check the unit wiring diagram to properly identify individual sensor wires.

Note: Notice that the "common" leg of each sensor is connected to Terminal 1TB4-17.
Specifications for the motor winding temperature sensor inputs are as follows:

[ ] Operating Range:
50 F to 310 F
[ ] Open:
Diagnostic **b A4**, **b A7** or **b A8**, as applicable.
[ ] Shorted:
No diagnostic.
[ ] Run Inhibit:
265 ± 15 F (i.e., UCP tolerance only); diagnostic **b E7**.
[ ] 15-Minute Start Delay:
> 165 ± 15 F (i.e., UCP tolerance only); operating code **A 70**.

Bearing Temperature Sensors (1TB4-19 thru -22)

The optional pair of sensors that monitor the temperature of the oil leaving the compressor motor bearings are connected to these terminals as described below:

a. Inboard sensor 4RT8 (i.e., sensor # 1) is connected to terminals 1TB4-19 and -20; and,
b. Outboard sensor 4RT9 (i.e., sensor # 2) is connected to terminals 1TB4-21 and -22.
Sensor and input specifications are as follows:

[ ] Range:
100 F to 180 F
[ ] Accuracy:
See sensor checkout in "Troubleshooting With Diagnostics" for MCSP temperature accuracies.
("MCSP" is the "motor/compressor start and protection" portion of micro module 1U3.)
[ ] Shorted:
Diagnostic **b AF** (4RT8) or **b b0** (4RT9); must not trip < 180 F.
[ ] Open:
No diagnostic.
[ ] Run Inhibit:
180 F; diagnostic **b EA** (4RT8) or **b Eb** (4RT9).

Tables 16 and 17 that follow, provide outpout voltage readings and contact status conditions for ribbon connectors 1P3 and 1P4 from the power supply output module (1U2) and relay output module 1U1.

Table 16
Ribbon Connector 1P4 Voltages (1) for Power Supply/Output Module 1U2

1P4 Terminal	VDC Signal Min.	VDC Signal Max.	Description of Status	1U2 Output Terminals
1	0.0	0.1	Transition Off	5 and 6 Open
1	0.85	1.6	Transition On	5 and 6 Closed
2	0.0	0.1	Oil Heater Off	3 and 4 Open
2	0.85	1.6	Oil Heater On	3 and 4 Closed
3	0.0	0.1	Start Off	7 and 8 Open
3	0.85	1.6	Start On	7 and 8 Closed
4	0.0	0.1	Oil Pump Off	1 and 2 Open
4	0.85	1.6	Oil Pump On	1 and 2 Closed
5	0.85	1.6	Overload On	8 and 9 Closed
6	0.0	0.7	HPC Closed (Normal Pressure)	
7	0.0	0.1	Stop Relay Off	
8	1.0	1.8	Reset Relay On	
5	0.0	0.1	Overload Off	8 and 9 Open
6	0.0	0.7	HPC Open (High Pressure)	
7	0.0	0.1	Stop Relay Off	
8	1.0	1.8	Reset Relay On	
5	0.85	1.6	Overload On	8 and 9 Open
6	6.0	22.5	HPHC Open (High Pressure)	
7	0.0	0.1	Stop Relay Off	
8	1.0	1.8	Reset Relay On	
5	0.85	1.6	Overload On	8 and 9 Open
6	0.0	0.7	HPC Closed (Normal Pressure)	
7	0.85	1.6	Stop Relay On	
8	1.0	1.8	Reset Relay On	
5	0.85	1.6	Overload On	8 and 9 Open
6	0.0	0.7	HPC Closed (Normal Pressure)	
7	0.0	0.1	Stop Relay Off	
8	0.0	0.1	Reset Relay Off	
9	-----	-----	Keying Plug	----------
10	-23.0	-11.9	Filament Voltage	----------
10 (1)	3.3 (1)	4.1 (1)	Filament Voltage	----------
11	Reference for 1P4-10		----------	----------
12	-28	-18.9	-23 Volt Supply	----------
13	13.7	22.5	+ 12 Volt Supply	----------
14	-----	-----	Common (+ 12 VDC), (Note 3)	----------
15	-----	-----	Not Used	----------
16	6.9	16.8	+ 12V Unfiltered	----------
17	-----	-----	Common (+ 8 VDC)	----------
18	8.5	13.0	+ 8 Volt Supply	----------
19	-13.0	-8.5	-8 Volt Supply	----------
20	5.34	5.66	+ 5 Volt Supply	----------
21	-----	----	Common (+ 5 VDC)	----------

Notes:
1. Voltage signal(s) in VAC with respect to Terminal 1P4-11 unless otherwise indicated.
2. Voltage values in this table apply only when ribbon connector 1P4 is connected to 1J4 of micro module 1U3.

Table 17
Ribbon Connector 1P3 Voltages (1) for
Relay Output Module 1U1

1P3 Terminal	VDC Signal		Description of Status	1U2 Output Terminals
	Min.	Max.		
1	0.0	0.06	"Close Vanes" Off	2 and 3 Open
1	5.1	5.6	"Close Vanes" On	2 and 3 Closed (2)
2	0.0	0.06	"Open Vanes" Off	1 and 3 Open
2	5.1	5.6	"Open Vanes" On	1 and 3 Closed
3	0.0	0.1	Condenser Water Pump Off	4 and 5 Open
3	0.85	1.6	Condenser Water Pump On	4 and 5 Closed
4	0.0	0.1	Purge Off	6 and 7 Open
4	0.85	1.6	Purge On	6 and 7 Closed
5	-----	-----	Keying Plug	----------
6	0.0	0.1	Alarm Off	8 and 10 Closed 9 and 10 Open
6	0.85	1.6	Alarm On	8 and 10 Open 9 and 10 Closed
7	0.0	0.1	Head Relief Off	11 and 12 Open
7	0.85	1.6	Head Relief On	12 and 12 Closed
8	0.0	0.1	Free Cooling Auxiliary Off	13 and 14 Open
8	0.85	1.6	Free Cooling Auxiliary On	13 and 14 Closed
9	0.0	0.1	Free Cooling Valves Off	16 and 17 Open 15 and 17 Closed 17 and 19 Open 17 and 18 Closed
9	0.85	1.6	Free Cooling Valves On	16 and 17 Open 15 and 17 Closed 17 and 19 Open 17 and 18 Closed
10	13.7	22.5	Relay Supply	----------
11	13.7	22.5	Common	----------

Notes:
1. The voltage values provided in this table apply only when ribbon connector 1P3 is connected to 1J3 of micro module 1U3.
2. This is a Triac output and cannot be checked in the same manner as a mechanical contact closure. Refer to "Vane Control Checkout Procedure" in this bulletin.
3. All voltages are to be measured with respect to 1P3-11.

Troubleshooting with UCP695 Control Panel Diagnostics

Note: This troubleshooting information is applicable only to those CVHB, CVHE, or CVHF units equipped with UCP695 control panels. These unit are:

— CVHE units; = "K" design sequence and later;
— CVHB units; = "V" design sequence and later;
— CVHF units; = All units.

UCP695 Overview

The microprocessor-based, UCP695 control panel visually indicates chiller operating and diagnostic codes on the operator display (refer to "Operator's Display" on page 8). If the UCP (i.e., unit control module) detects a diagnostic condition, it alternately flashes the 4-digit unit operating mode (i.e., code prefix **A**) that was in effect at the time the unit shutdown and the 4-digit diagnostic code (i.e., code prefix **b**) on the display. Use the information in the following section to identify and correct the cause of a unit shutdown.

Note: A latching diagnostic condition (i.e., one requiring manual reset) detected by the unit control panel cannot be cleared from a higher level device (i.e., an SCP, Tracer or generic BAS). The chiller must be manually reset at the UCP695 control panel.

Complete listings of the codes used to identify CVHE operating modes and diagnostic conditions--along with the display menus--are provided in Tables 1, 2 and 3 on pages 8, 9 and 10. For a more detailed explanation of UCP695 control panel features and functions, refer to the "System Control" portion of the CVHE operation and maintenance manual that shipped with the unit.

Troubleshooting

Note: Whenever checking any of the micro module's sensors, be sure to allow sufficient time for the sensor slew rate to "catch up" (i.e., 5 minutes maximum).

Unit troubleshooting information in this section is presented by diagnostic code, and follows the code sequence shown in Table 2 on page 9. Typical starter and chiller electrical schematics are provided in Figures 8 and 9 for reference. Terminal strip locations are shown in Figure 6 on page 34. Safety control cutout settings and operating time delay values are given in Table 18 on page 50.

WARNING: Failure to exercise caution when servicing unit may result in injury or death due to electrical shock.

Whenever micro module replacement is indicated by any of the following procedures, always check the power supply output module before replacing micro module 1U3 (See "Power Supply Checkout Procedure").

Note: When altering any of the micro module (1U3) settings, remember that none of the control setpoints can be changed if any of these diagnostic conditions exist: **b A3, b Ab, b AC, b Ad, b AE, b d9, b Ed, b F7, b F8, b F9, b FA, b Fb, b Fd** or **b FF**. In these instances, the condition that caused the diagnostic must be corrected first. For all other diagnostics, it is possible to change 1U3's control setpoints after manually resetting the chiller (i.e., adjust the chiller switch to STANDBY/RESET, then back to one of the AUTO positions).

Figure 8 - Starter-Section Electrical Schematics for Alternate Starter Types Used with CVHE Units

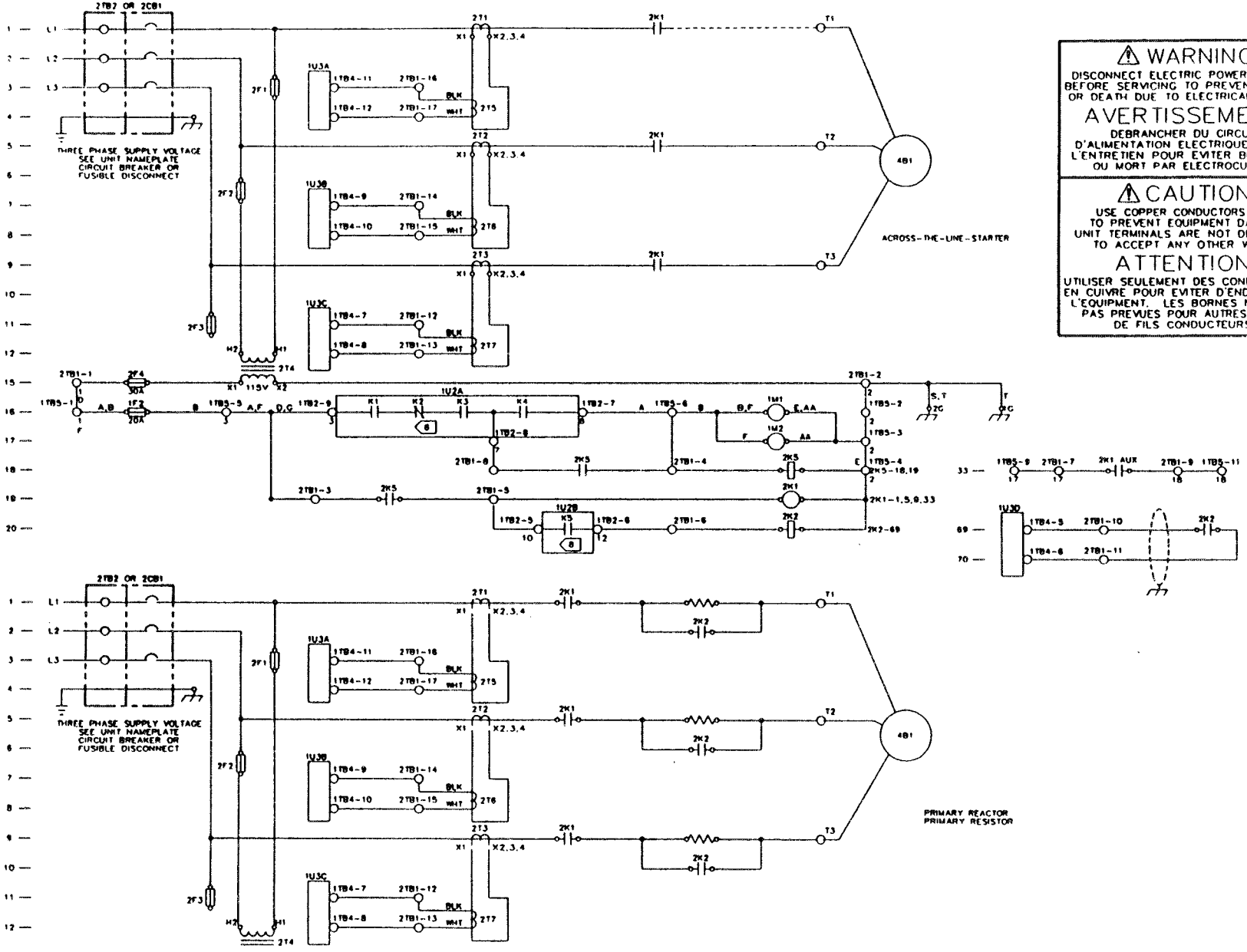

(Continued on next Page)

(Continued from previous page)

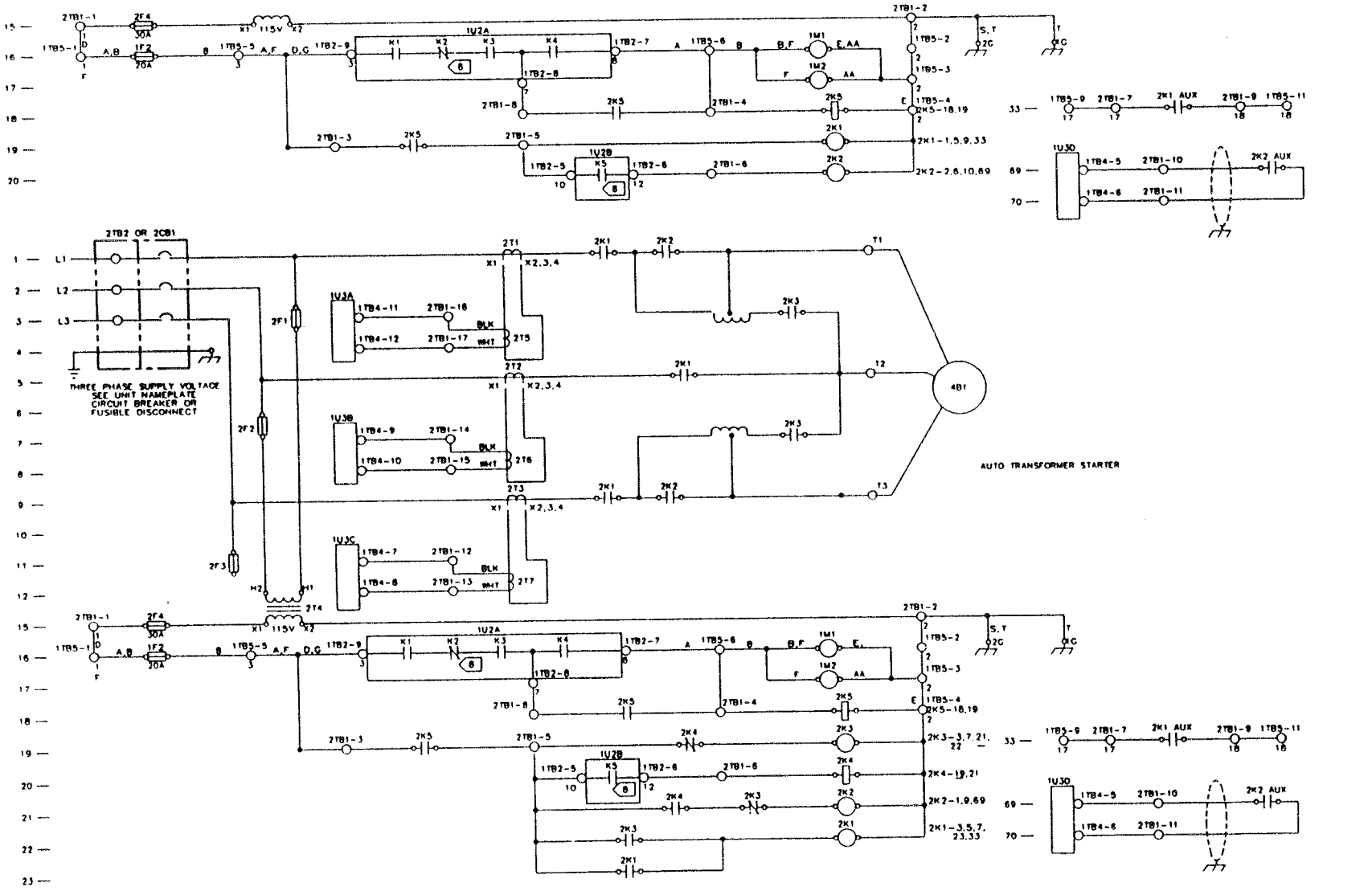

Drwg. X39470503C

Figure 9 - Electrical Schematic for Standard CVHB/E/F w/Wye-Delta, Remote-Mounted Starter (Page 1)

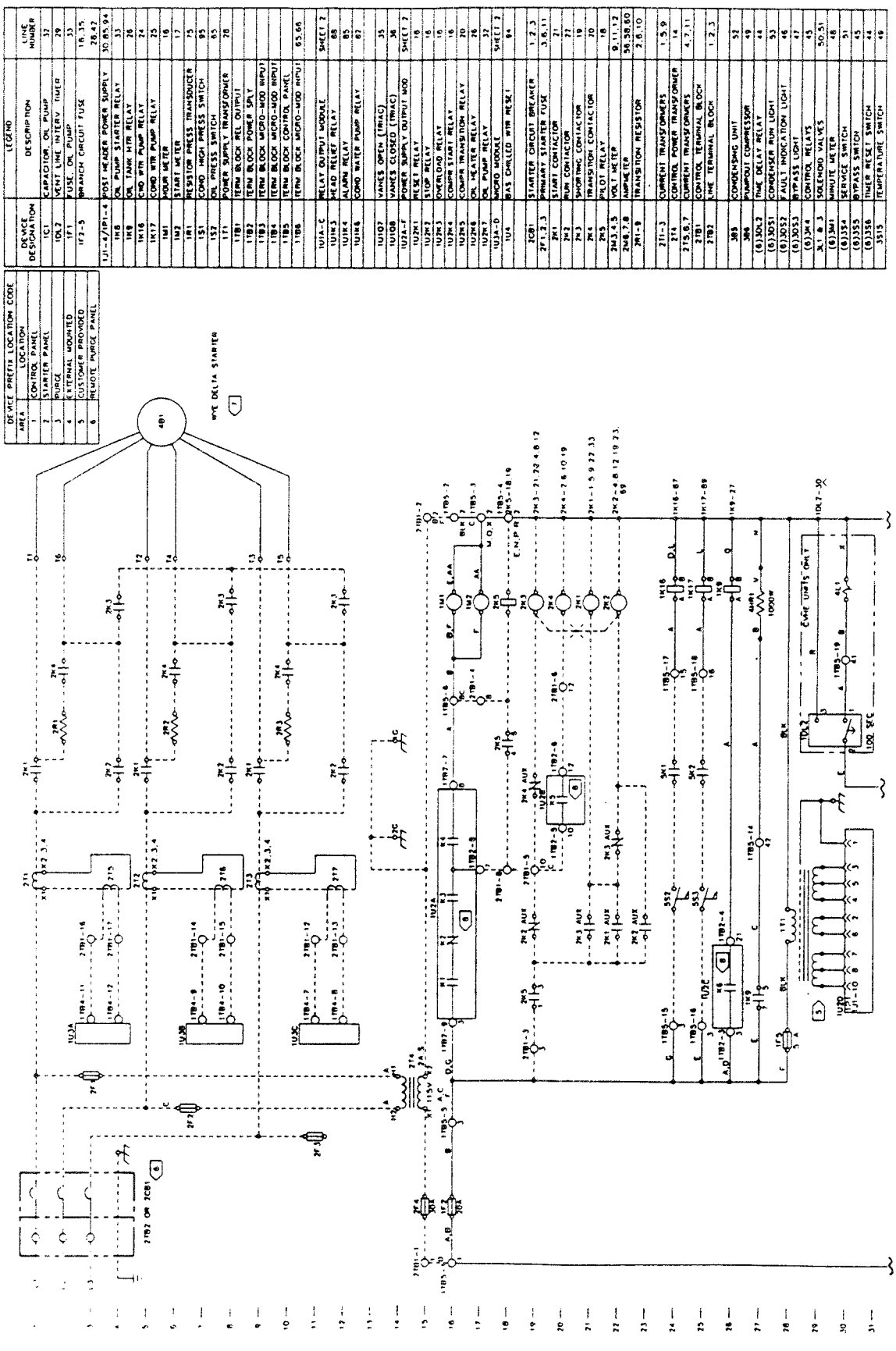

(Continued from previous page)

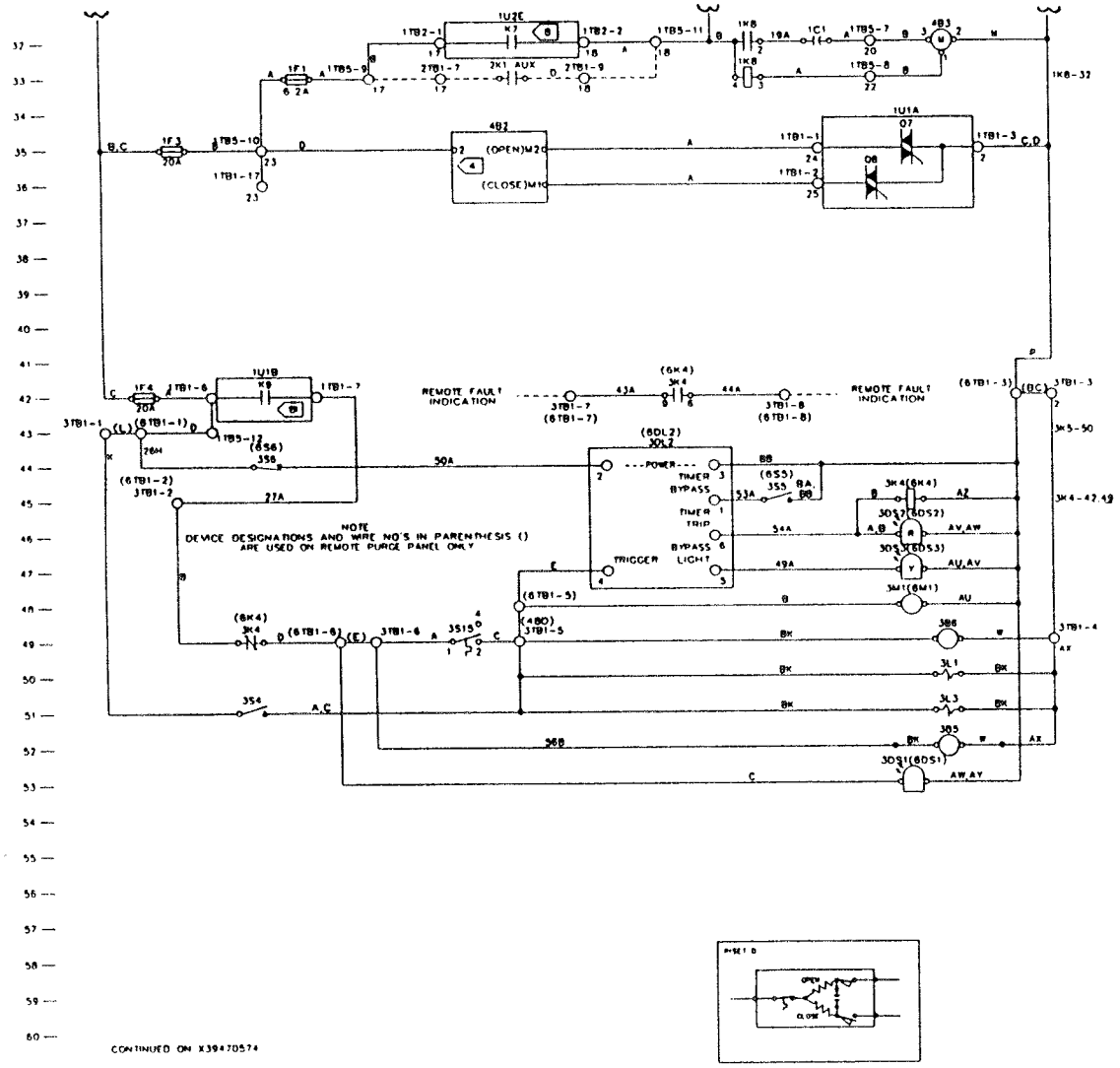

3TB1	PURGE TERMINAL BLOCK	
(6TB1)	(REMOTE PANEL TERM. BLOCK)	
4B1	COMPRESSOR MOTOR	5
4B1R2,3,4	MOTOR WINDING TEMP. SENSOR	69,71,73
4B2	VANE ACTUATOR MOTOR	35
4B3	OIL PUMP MOTOR	32
4HR1	OIL TANK HEATER	27
4L1	VENT LINE SOLENOID	30
4RT1-9	THERMISTOR	69-80
5DS1	ALARM INDICATION	85
5K1	CHWD WATER PUMP CONT. AUX.	N/A
5K2	COND. WATER PUMP CONT. AUX.	87
5K3	ALARM RELAY	84
5K4	HEAD RELIEF REQUEST CONT.	88
5S2	CHWD WATER FLOW SWITCH	24
5S3	COND. WATER FLOW SWITCH	25
5S4	INTERLOCK SWITCH	67

NOTES

1. SOLID LINES INDICATE TRANE WIRING. DASHED LINES INDICATE FIELD WIRING. PHANTOM LINES INDICATE OPTIONAL FEATURES OR ALTERNATE CIRCUITRY.
2. UNLESS OTHERWISE NOTED, ALL SWITCHES ARE SHOWN AT 25°C (77°F), AT ATMOSPHERIC PRESSURE, AT 50% RELATIVE HUMIDITY, WITH ALL UTILITIES TURNED OFF AND AFTER A NORMAL SHUTDOWN HAS OCCURED.
3. NUMBERS ALONG THE RIGHT SIDE OF THE SCHEMATIC DESIGNATE THE LOCATION OF THE CONTACTS BY LINE NUMBER. AN UNDERLINED NUMBER INDICATES A NORMALLY CLOSED CONTACT. AN OPEN ARROWHEAD BELOW THE LINE NUMBER POINTING UPWARD INDICATES A TIMED CONTACT WHICH BEGINS TIMING WHEN ENERGIZED.

<4> SEE INSET D FOR TYPICAL INTERNAL WIRING OF ACTUATOR

<5> SEE SERVICE MANUAL FOR INDIVIDUAL SECONDARY VOLTAGES

<6> THREE PHASE POWER SUPPLY VOLTAGE - SEE UNIT NAMEPLATE

<7> REMOTE Y-Δ STARTER SHOWN AND WIRING BETWEEN CONTROL PANEL AND STARTER REMAIN SIMILAR FOR VARIOUS TYPES OF STARTERS. SEE STARTER MANUFACTURES WIRING DIAGRAM FOR SPECIFIC WIRING

<8> RELAY COILS NOT SHOWN. CONTACTS ARE CONTROLLED BY THE LOGIC OF THE MICRO-MODULE (1U3). SEE SEQUENCE OF OPERATION LINES 102 - 115 NEXT PAGE

⚠ WARNING

DISCONNECT ELECTRIC POWER SUPPLY BEFORE SERVICING TO PREVENT INJURY OR DEATH DUE TO ELECTRICAL SHOCK.

AVERTISSEMENT

DEBRANCHER DU CIRCUIT D'ALIMENTATION ELECTRIQUE AVANT L'ENTRETIEN POUR EVITER BLESSURE OU MORT PAR ELECTROCUTION.

⚠ CAUTION

USE COPPER CONDUCTORS ONLY TO PREVENT EQUIPMENT DAMAGE. UNIT TERMINALS ARE NOT DESIGNED TO ACCEPT ANY OTHER WIRING

ATTENTION

UTILISER SEULEMENT DES CONDUCTEURS EN CUIVRE POUR EVITER D'ENDOMMAGER L'EQUIPMENT. LES BORNES NE SONT PAS PREVUES POUR AUTRES TYPES DE FILS CONDUCTEURS

Drwg. X39470573A

Figure 9 (Cont'd.) - Electrical Schematic for Standard CVHB/E/F w/Wye-Delta, Remote-Mounted Starter (Page 2)

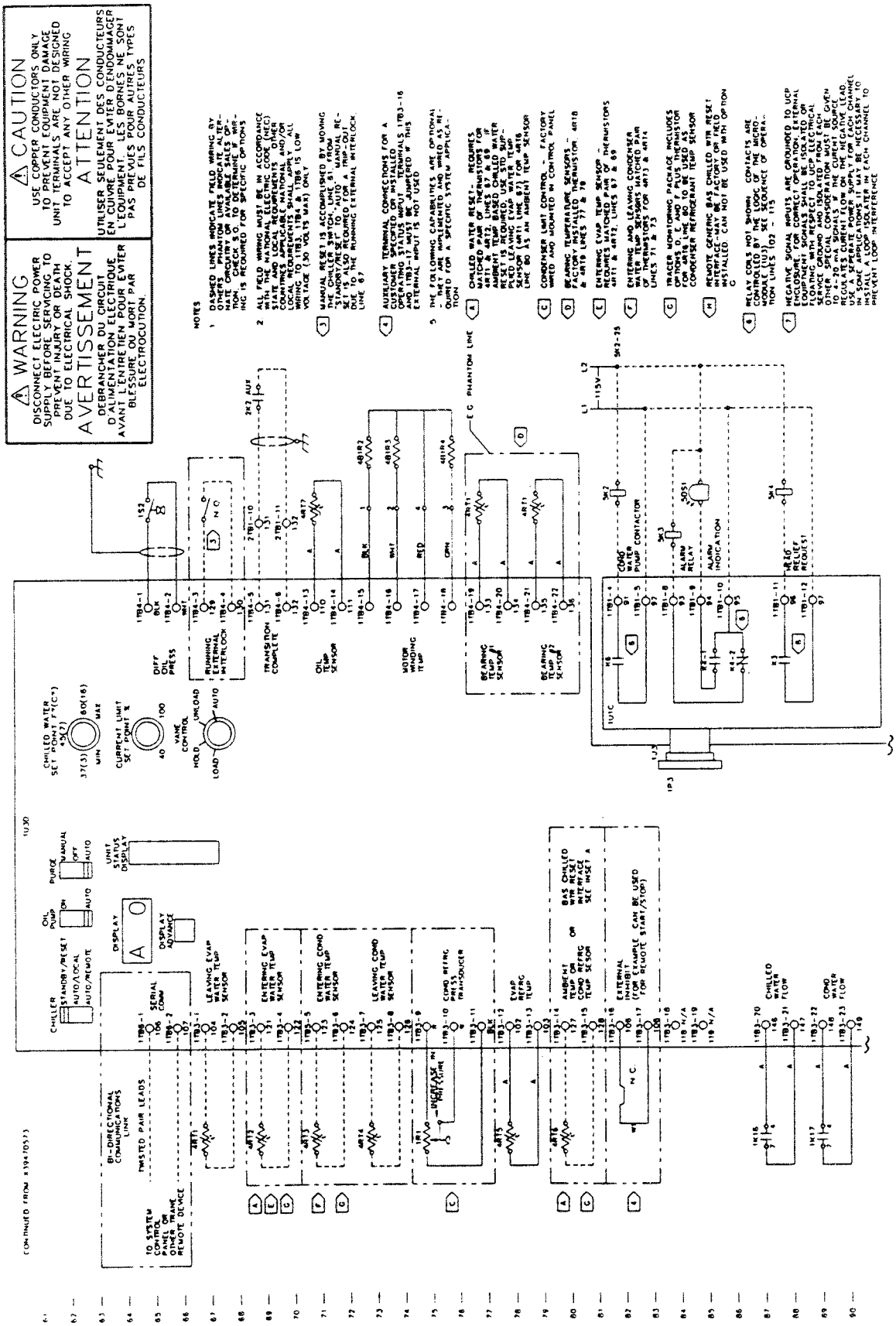

(Continued from previous page)

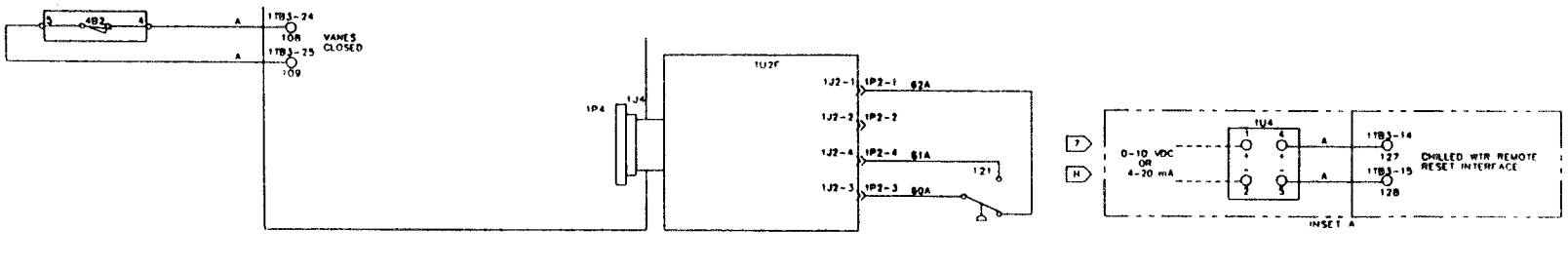

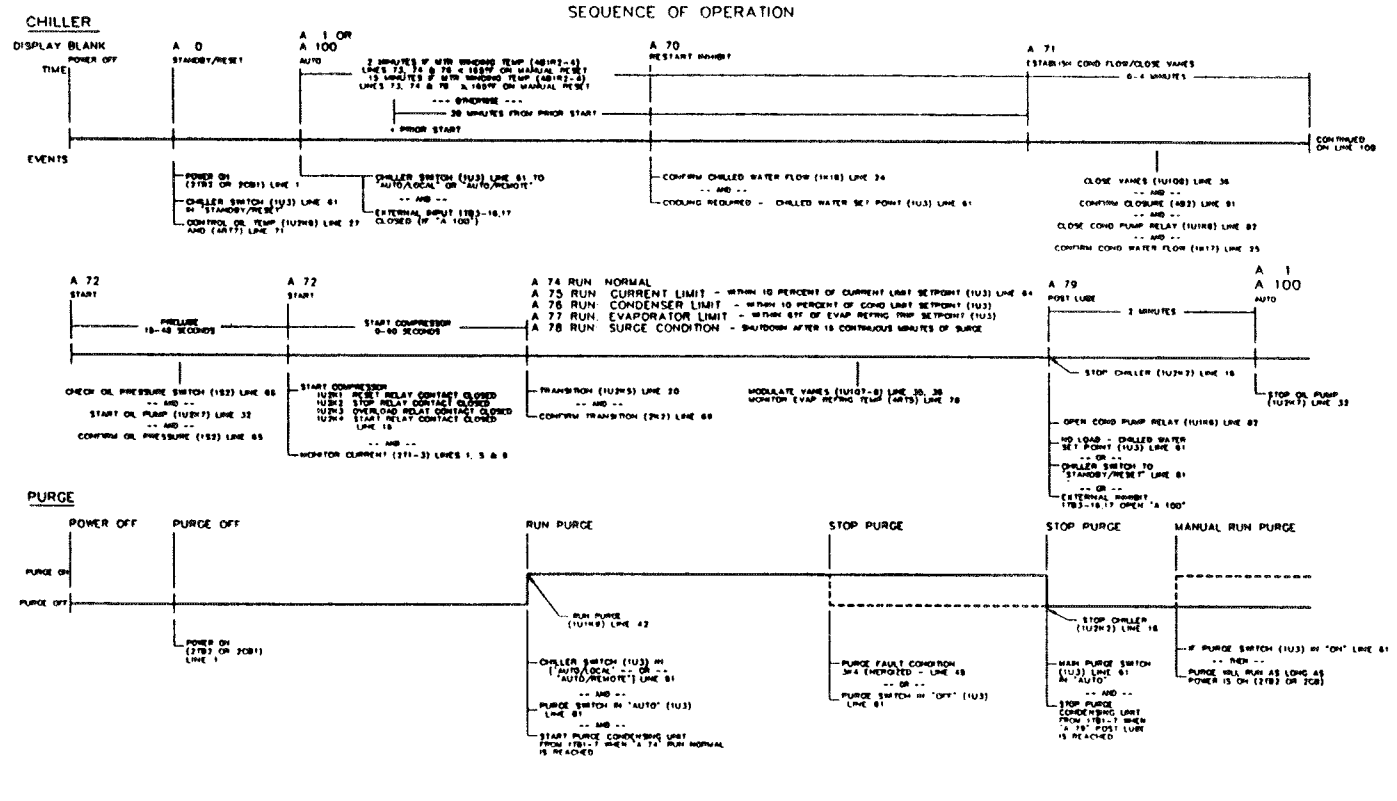

Drwg. X39470574C

Table 18
Unit Time Delays and Safety Control Cutout Settings

Operating Controls: "Timers"	Timing Interval	System Reset	Operating Code (1)
Prelube (2)	15 seconds	n/a	A 72
Restart Inhibit (3):			
Winding Temp. < 165 F (74 C)	4 minutes	n/a	A 70
Winding Temp. ≥ 165 F	15 minutes	n/a	A 70
Since Last Start	30 minutes	n/a	A 70
Post-Lube	2 minutes	n/a	A 79
Free-Cool/Vane Open Inhibit (4)	3 minutes	n/a	A 9
Oilless Purge: (purge switch @ AUTO)(5)	5 minutes ON 115 min. OFF	n/a	n/a
Purifier Purge: (purge switch @ AUTO)	Controlled by purge timer (6)	manual (7)	n/a
Sump Vent-Line Interval (8)	100 seconds	n/a	n/a
Safety Controls: Fault Time-Outs	**Timing Interval**	**System Reset**	**Diagnostic Code (1)**
Oil Pressure Overdue (2)	33 seconds	manual	b F2
Transition Complete Overdue	2 seconds	manual	b FO
Transition-from-Start Complete	Max. accel. timer setting	manual	b EE
Condenser Water Flow Overdue	3 minutes	manual	b dC
No Evaporator Water Flow	2 seconds max. w/o flutter	auto	b Ed
Vane Closure Overdue	3 minutes	manual	b FA
Free-Cool Valve Closure Overdue	3 minutes	manual	b F9
Surge	15 minutes	manual	b dA
Safety Controls: Unit Cutouts	**Control "Trip" Point**	**System Reset**	**Diagnostic Code (1)**
Winding Temp. Run Inhibit	265 ± 15 F* 130 ± 15 C*	manual	b E7
Low Oil Temp. Run Inhibit	100± 2 F 38± 2 C	auto	b F3
High Oil Temp. Run Inhibit	180± 2 F 83± 2 C	manual	b F4
High Bearing Temp. Run Inhibit (Optional)	180± 2 F 83± 2 F	manual	b EA, Eb
Lvg. Water Temp. Low Limit (Std. Range)	35± 1 F 2± 1 C	auto	n/a
Differential Oil Pressure Switch — Closes / Opens	11.5 - 15 psid 9± 1 psid	manual	b E8
High Pressure Cutout Switch — Std. Units / ASME Units	15± 1 psig 25± 1 psig (9)	manual	b F5
Oilless Purge "Extend Run" Press. Switch — Closes / Opens	20 psig 25 psig	n/a	n/a

Notes:
1. See Tables 2 and 3 on pages 9 and 10 for complete code listing.
2. Since prelube timing can begin at any point during 33- second "oil pressure overdue" interval, actual elapsed time to "establish oil pressure" and "prelube" can be anywhere from 15 to 48 seconds.
3. The 165 F inhibit applies only when unit is first powered-up, or if chiller switch is turned from STANDBY/RESET to AUTO/ LOCAL or to AUTO/REMOTE. Otherwise, 30 minutes must elapse between compressor starts.
4. Operating code **A 9** will appear on operator display only when free cooling valve limit switches have opened.
5. See CVHB/E/F operation/maintenance manual for purge operation.
6. See "Electrical Sequence of Operation". Refer to Purifier Purge operation manual for details.
7. Reset at 3S6 or 6S6 on purge panel.
8. This timer closes sump vent line during prelube and during unit start sequence.
9. Fixed differential of 3-6 psid for switch closure on a rise in differential oil pressure.

Resetting Diagnostics

When instructed to RESET DIAGNOSTIC, turn chiller switch to STANDBY/RESET. (If the chiller switch is already at STANDBY/RESET, flip it to one of the AUTO positions--then back to STANDBY/RESET.) This should clear the diagnostic, and display operating code **A 0**.)

b A3
Evaporator Refrigerant Temperature Range

Diagnostic **b A3** is displayed if the selected evaporator refrigerant trip setpoint is below the minimum allowable setting. This setpoint is selected at the "Evap. Refrig. Trip" potentiometer on the UCP service interface (Figure 2, pg. 12). Minimum allowable setpoint is 29 F for standard range units; 0 F for extended range units. To reset the evaporator refrigerant temperature trip setpoint:

1. Turn evaporator refrigerant "trip" setpoint potentiometer fully clockwise.

2. Reset diagnostic.

3. Turn vane control switch to HOLD.

4. Press display advance pushbutton until evaporator trip setpoint code prefix **"U"** is displayed. Latching diagnostic **b A3** occurs if the setpoint is out-of-range low.

5. With the chiller switch still in STANDBY/RESET and the vane control switch at HOLD, reset the evaporator refrigerant trip setpoint by turning the potentiometer screw until the desired setpoint is reached.

If the display does not change when this adjustment is made, refer to the "b A3 Diagnostic Procedure" in Figure 10.

b A4, A7, A8
Motor Temperature Sensors

One of these diagnostics (i.e., **b A4, b A7 or b A8**) is displayed--and the unit shuts down--when the temperature measured at the corresponding sensor input (Figure 11) exceeds 310 F. To determine whether the sensor is open or malfunctioning, refer to the "b A4, b A7, b A8 Diagnostic Procedure" in Figure 11.

b A5
Maximum Acceleration Time Range

Latching diagnostic **b A5** is displayed if the acceleration time setpoint exceeds the maximum value allowable. The adjustment range for this setting--which is factory-set using DIP switch block S3-- is 6 to 65 seconds (± 2.5 seconds maximum). Refer to "Switch Block S3:.." on page 25.

Note: "Maximum acceleration time" is measured from compressor motor start to "transition" (i.e., when inrush current drops to 85% of compressor motor RLA). Starter type and available starting torque are used to determine this factory setpoint. Recommended maximum acceleration times for several starter types are:

27 seconds for "star-delta" starters;
16 seconds for "auto-transformer" starters;
11 seconds for "primary reactor" starters;
6 seconds for "across-the-line" starters.

Figure 10 - Diagnostic "b A3" Evaporator Refrigerant Temperature Range

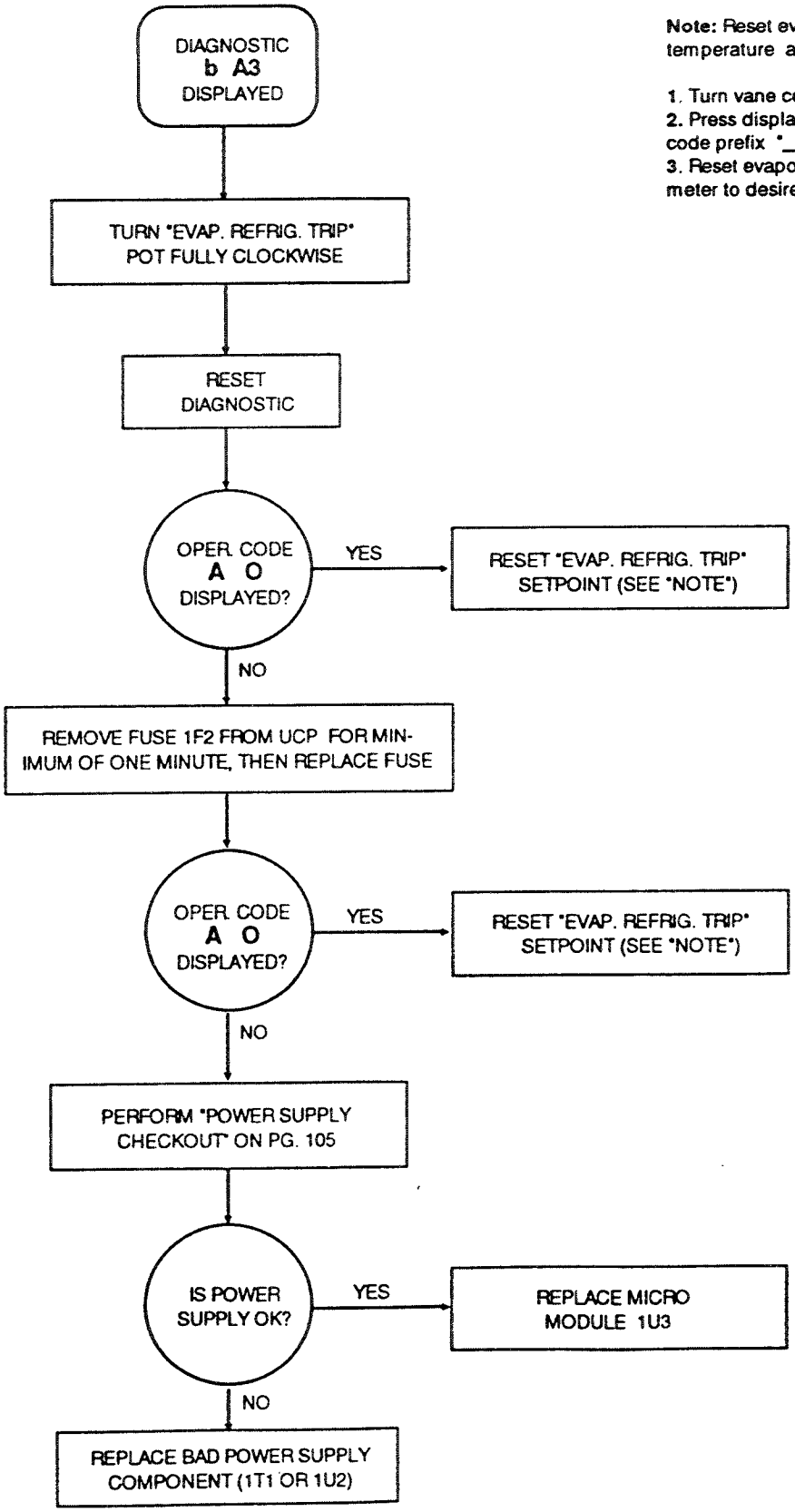

Note: Reset evaporator refrigerant trip temperature as follows:

1. Turn vane control switch to HOLD.
2. Press display advance pushbutton until code prefix "_" is displayed.
3. Reset evaporator refrigerant trip potentiometer to desired setpoint.

Figure 11- Diagnostic "b A4, b A7, b A8" Motor Temperature Sensor # 1, # 2 or # 3

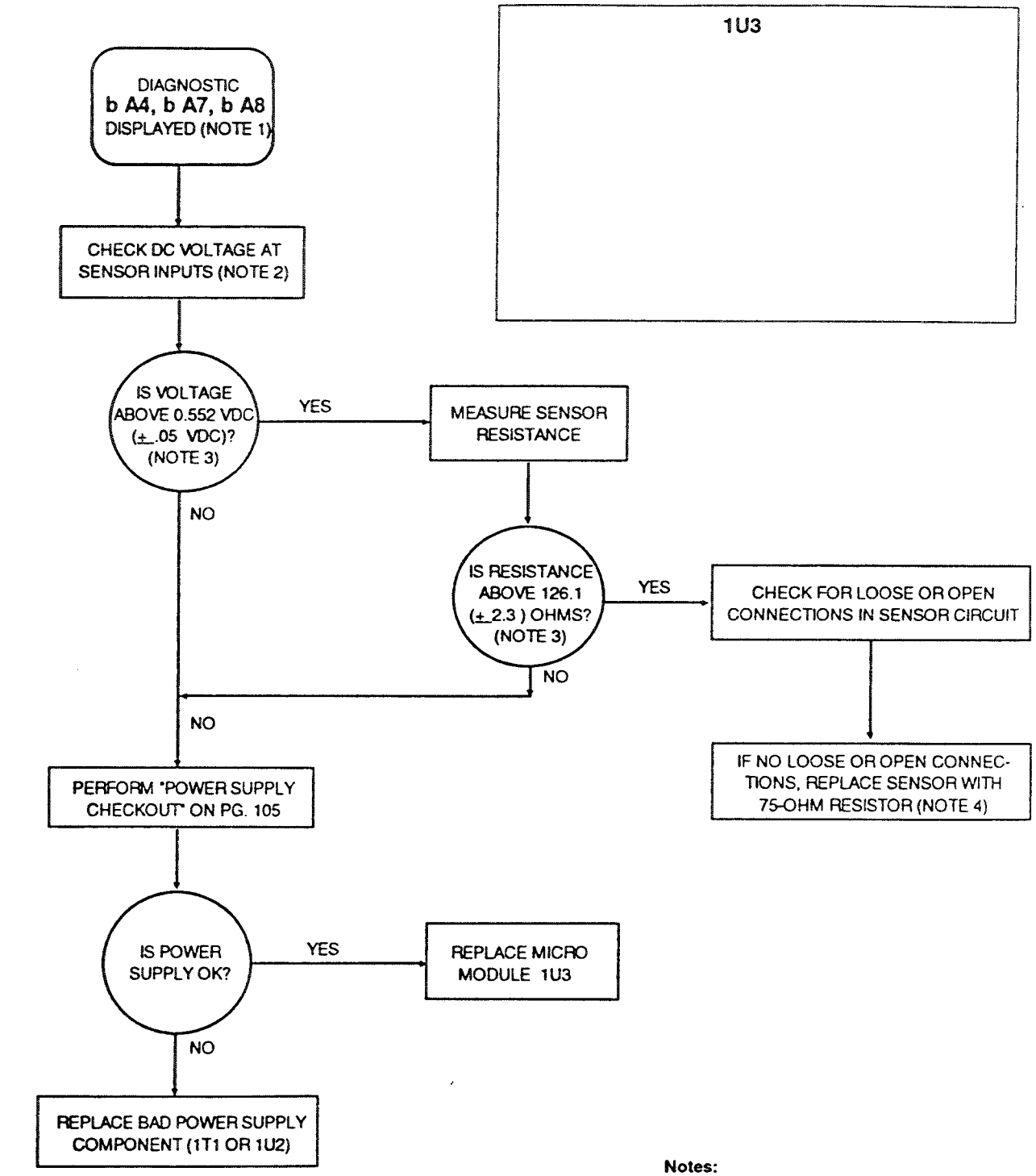

Sensor Designation	Electrical Designation	Electrical Connections	Diagnostic Code
Sensor # 1	4B1R2	1TB4-15, -17	b A4
Sensor # 2	4B1R3	1TB4-16, -17	b A7
Sensor # 3	4B1R4	1TB4-18, -17	b A8

Notes:

1. These diagnostics can occur when the chiller is in any of the "start" or "run" modes.
2. Terminal 1TB4-17 is ground reference point.
3. Table 19 on the next page gives actual voltage and resistance for these rtd's over a wide range of temperatures.
4. Only two of the three motor temperature sensors can be replaced with resistors. After that, contact CenTraVac technical service department in La Crosse.

Table 19
Motor Winding Temperature Sensor
Conversion Data

Actual Temp. (F)	Sensor Voltage (± 0.05V)	Nominal Resistance (Ohms)	Acceptable Resistance Values (Ohms)	
			Minimum	Maximum
50	0.321	70.1± 2.7	67.4	72.8
55	0.326	71.1± 2.7	68.4	73.8
60	0.330	72.1± 2.7	69.4	74.8
65	0.334	73.1± 2.7	70.4	75.8
70	0.338	74.0± 2.6	71.4	76.6
75	0.342	75.0± 2.6	72.4	77.6
80	0.347	76.0± 2.6	73.4	78.6
85	0.351	77.0± 2.6	74.4	79.6
90	0.355	78.0± 2.6	75.4	80.6
95	0.359	79.0± 2.6	76.4	81.6
100	0.364	80.0± 2.6	77.4	82.6
110	0.372	82.0± 2.5	79.5	84.5
120	0.381	84.0± 2.5	81.5	86.5
130	0.390	86.0± 2.5	83.5	88.5
140	0.397	88.0± 2.5	85.5	90.5
150	0.407	90.2± 2.4	87.8	92.6
160	0.415	92.2± 2.4	89.8	94.6
170	0.424	94.3± 2.3	92.0	96.6
180	0.433	96.5± 2.3	94.2	98.8
190	0.441	98.5± 2.3	96.2	100.8
200	0.450	100.8± 2.3	98.5	103.1
210	0.459	103.0± 2.2	100.8	105.2
220	0.468	105.1± 2.2	102.9	107.3
230	0.476	107.2± 2.1	105.1	109.3
240	0.486	109.5± 2.0	107.5	111.5
250	0.494	111.6± 2.0	109.6	113.6
260	0.504	114.0± 2.0	112.0	116.0
270	0.514	116.4± 2.1	114.3	118.5
280	0.523	118.7± 2.2	116.5	120.9
290	0.532	121.1± 2.2	118.9	123.3
300	0.542	123.6± 2.3	121.3	125.9
310	0.552	126.1± 2.3	123.8	128.4

Note: To determine if thermistor is out of range, compare it's resistance (or voltage input) reading with "actual " temperature indicated by a thermometer, considering the thermometer's margin of error.

To check the maximum acceleration time setpoint:

1. Open the control panel door; then remove the narrow access strip immediately above the unit control module (Figure 2, page 12).

WARNING: Failure to exercise caution when servicing unit with power on may result in injury or death due to electrical shock.

2. With the DIP switch blocks exposed, check the maximum acceleration time setpoint established by the positions of Switches 1 through 5 on DIP switch block S3. Use Table 11 on page 26 to identify the proper switch positions for the recommended acceleration time settings.

Note: In the event that latching diagnostic **b A5** occurs, attempt to clear the diagnostic as described in the "b A5 Diagnostic Procedure" in Figure 12. If this diagnostic persists, micro module 1U3 is defective and must be replaced.

b A9
Oil Temperature Sensor

Diagnostic condition **b A9** occurs if the oil temperature sensor (4RT7) "reads" a temperature below 32 F or above 180 F. The oil temperature sensor is located in a bulbwell in the back of the oil sump, and its leads are connected to terminals 1TB4-13 and 1TB4-14 on micro module 1U3.

Use the instructions in the **"b A9** Diagnostic Procedure" in Figure 13 to determine whether 4RT7 is malfunctioning, shorted or open.

Note: It is unlikely that any machine's operating or nonoperating conditions would cause the oil temperature to fall below 32 F.

b Ab
Leaving (Evaporator) Water Temperature Sensor

Latching diagnostic **b Ab** occurs whenever the temperature measured by the leaving evaporator water temperature sensor (4RT1) drops below 15 F. (A leaving water temperature "low limit" stops chiller operation at 35.3 F on standard range units only).

Use the instructions in the **"b Ab** Diagnostic Procedure" in Figure 14 to determine whether sensor 4RT1 is open or malfunctioning. (The sensor leads are connected to terminals 1TB3-1 and 1TB3-2 on micro module 1U3.)

If the results of the sensor checkout indicate that 4RT1 is functioning properly, determine why the leaving water temperature is so low; among the possible causes to consider are:

[ ] chilled water flow problems (e.g., plugged strainers or heat exchangers, bypassed water, pump malfunction, or erratic return water temperature).

[ ] control module or vane actuator malfunction (i.e., a loss of setpoint or actuator control can cause excessive loading).

Figure 12 - Diagnostic "b A5" Maximum Acceleration Time Range

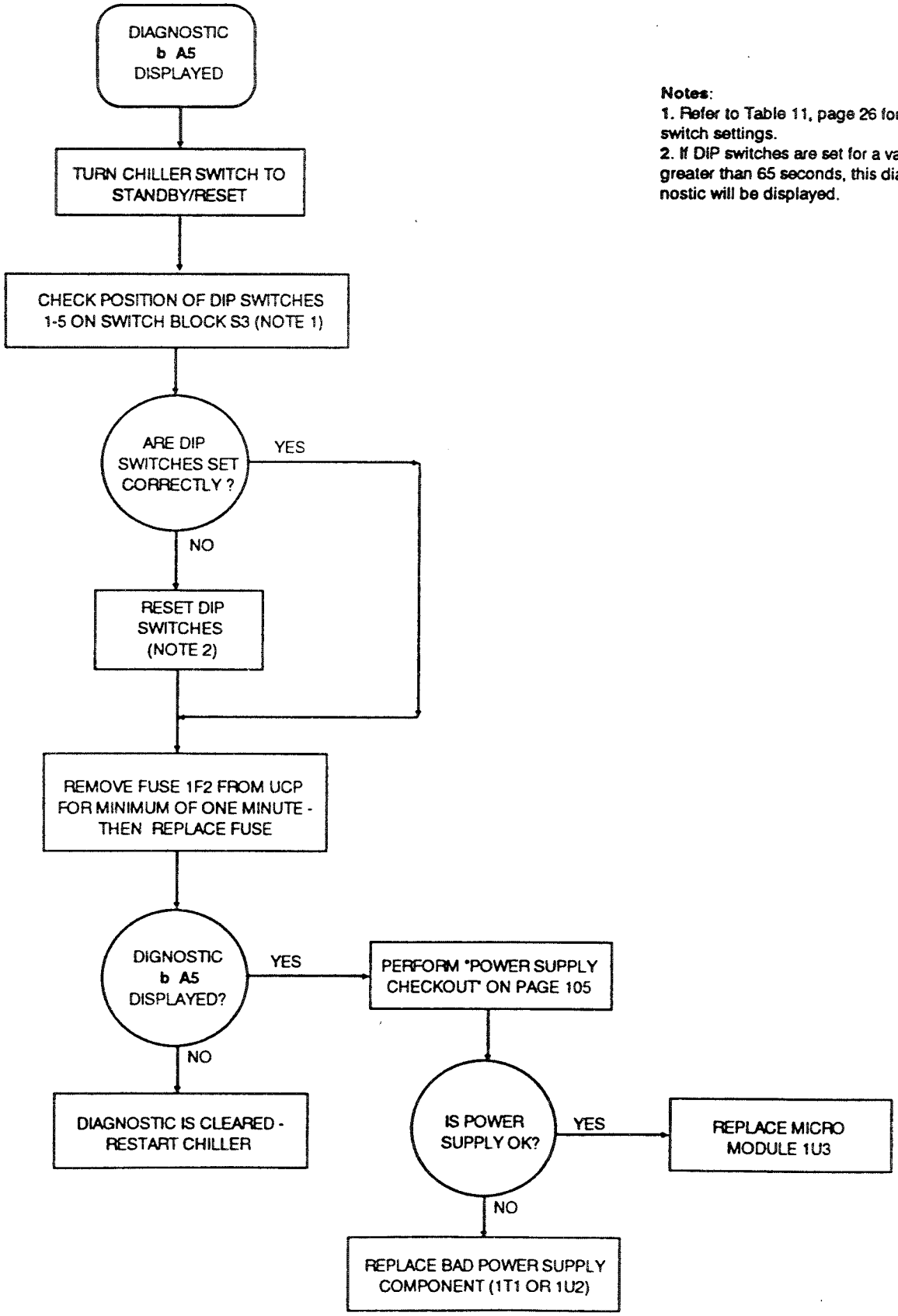

Notes:
1. Refer to Table 11, page 26 for DIP switch settings.
2. If DIP switches are set for a value greater than 65 seconds, this diagnostic will be displayed.

Figure 13 - Diagnostic "b A9" Oil Temperature Sensor

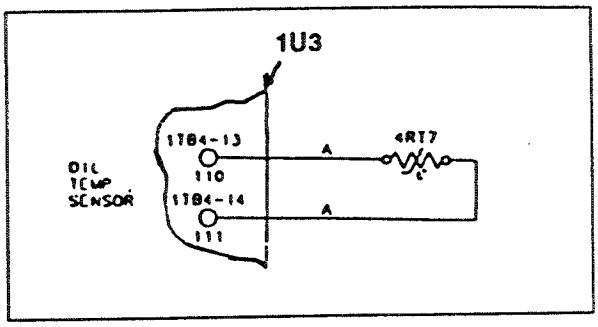

DIAGNOSTIC b A9 DISPLAYED

CHECK DC VOLTAGE AT TERMINALS 1TB4-13, -14

IS VOLTAGE BETWEEN 2.1-5.21 VDC?

YES

NO

CHECK SENSOR RESISTANCE

DO VOLTAGE & RESISTANCE READINGS MATCH ? (NOTE 1)

YES

CHECK FOR LOOSE OR OPEN CONNECTIONS IN SENSOR CIRCUIT

ARE SENSOR CONNECTIONS OK?

YES

REPLACE SENSOR 4RT7 (NOTE 2)

CHECK SENSOR RESISTANCE

DO VOLTAGE & RESISTANCE READINGS MATCH ? (NOTE 1)

YES

RESET DIAGNOSTIC & RESTART CHILLER

NO

REPLACE MICRO MODULE 1U3

NO

REPAIR CONNECTION

NO

PERFORM POWER SUPPLY CHECKOUT ON PAGE 105

IS POWER SUPPLY OK?

YES

NO

REPLACE BAD POWER SUPPLY COMPONENT (1T1 OR 1U2)

Notes:
1. Compare voltage and resistance values given in Table 20 on next page.
2. Micro must be reset following 4RT7 replacement.

Table 20
Sensor Conversion Data: Oil Temperature (4RT7) and Optional Bearing Temperature Sensors(4RT8, 4RT9))

Actual Temp. (F)	Actual Resist. (Ohms)	Thermistor Voltage (Note 3)	Actual Temp. (F)	Actual Resist. (Ohms)	Thermistor Voltage (Note 3)	Actual Temp. (F)	Actual Resist. (Ohms)	Actual Voltage (Note 3)	Actual Temp. (F)	Actual Resist. (Ohms)	Actual Voltage (Note 3)
32	32,861.74	5.211	70	11,888.77	4.770	108	4,871.11	4.004	146	2,215.59	3.020
33	31,935.33	5.203	71	11,595.68	4.754	109	4,765.02	3.980	147	2,172.78	2.993
34	31,039.07	5.195	72	11,310.78	4.738	110	4,661.56	3.956	148	2,130.95	2.966
35	30,170.77	5.187	73	11,033.81	4.721	111	4,560.67	3.931	149	2,090.03	2.940
36	29,329.83	5.179	74	10,764.53	4.705	112	4,462.27	3.907	150	2,050.01	2.913
37	28,515.28	5.170	75	10,502.71	4.688	113	4,336.29	3.882	151	2,010.87	2.887
38	27,726.22	5.161	76	10,248.11	4.671	114	4,272.67	3.857	152	1,972.58	2.861
39	26,961.78	5.152	77	10,000.51	4.653	115	4,181.34	3.832	153	1,935.13	2.834
40	26,221.09	5.143	78	9,759.70	4.636	116	4,092.24	3.807	154	1,898.49	2.808
41	25,503.33	5.134	79	9,525.47	4.618	117	4,005.31	3.782	155	1,862.65	2.782
42	24,807.73	5.124	80	9,297.62	4.600	118	3,920.24	3.756	156	1,827.59	2.756
43	24,133.52	5.114	81	9,075.96	4.581	119	3,837.72	3.731	157	1,793.28	2.730
44	23,479.98	5.104	82	8,860.29	4.563	120	3,756.95	3.705	158	1,759.71	2.704
45	22,846.40	5.094	83	8,650.45	4.544	121	3,678.12	3.679	159	1,726.86	2.678
46	22,232.11	5.084	84	8,446.26	4.525	122	3,601.11	3.654	160	1,694.72	2.652
47	21,636.47	5.073	85	8,247.54	4.506	123	3,526.48	3.628	161	1,663.26	2.626
48	21,058.83	5.062	86	8,054.13	4.486	124	3,453.62	3.602	162	1,632.47	2.601
49	20,498.61	5.051	87	7,865.87	4.467	125	3,382.47	3.580	163	1,602.34	2.575
50	19,995.21	5.040	88	7,682.62	4.447	126	3,313.00	3.550	164	1,572.85	2.550
51	19,428.09	5.029	89	7,504.22	4.426	127	3,245.16	3.524	165	1,543.97	2.524
52	18,916.69	5.017	90	7,330.53	4.406	128	3,178.90	3.498	166	1,515.71	2.499
53	18,420.49	5.005	91	7,161.41	4.385	129	3,114.19	3.471	167	1,488.04	2.474
54	17,939.01	4.993	92	6,996.74	4.365	130	3,050.99	3.445	168	1,460.96	2.449
55	17.471.74	4.981	93	6,836.36	4.344	131	2,989.25	3.419	169	1,434.43	2.424
56	17,018.23	4.969	94	6,680.17	4.322	132	2,928.94	3.392	170	1,498.47	2.399
57	16,578.03	4.956	95	6,528.05	4.301	133	2,870.02	3.366	171	1,383.04	2.375
58	16,150.71	4.943	96	6,379.86	4.279	134	2,812.45	3.339	172	1,358.14	2.350
59	15,735.84	4.930	97	6,235.50	4.257	135	2,756.20	3.313	173	1,333.75	2.326
60	15,333.03	4.916	98	6,094.87	4.235	136	2,701.24	3.286	174	1,309.87	2.302
61	14,941.88	4.903	99	5,957.84	4.213	137	2,647.54	3.259	175	1,286.48	2.278
62	14,562.03	4.889	100	5,824.32	4.191	138	2,595.05	3.233	176	1,263.57	2.254
63	14,193.10	4.875	101	5,694.22	4.168	139	2,543.76	3.206	177	1,241.13	2.230
64	13,834.75	4.861	102	5,567.42	4.145	140	2,493.62	3.179	178	1,219.13	2.206
65	13,486.65	4.846	103	5,443.84	4.122	141	2,444.62	3.153	179	1,197.61	2.183
66	13,148.46	4.831	104	5,323.39	4.099	142	2.396.72	3.126	180	1,176.52	2.159
67	12,819.88	4.816	105	5,205.97	4.075	143	2,349.89	3.099	—	—	—
68	12,500.59	4.801	106	5,091.51	4.052	144	2,304.11	3.073	—	—	—
69	12,190.32	4.786	107	4,979.91	4.028	145	2,259.35	3.046	—	—	—

Notes:

1. Oil temperature sensor 4RT7 connected to 1U3 at 1TB4-13 and -14; overall accuracy is ±2 F at 100-180 F, ±5 F at 32-100 F.
2.. Bearing temperature sensors 4RT8 and 4RT9 connected to 1U3 at 1TB4-19, -20 and at 1TB4-21, -22; overall accuracy is + 2 F.
3. To determine if thermistor is out of range, compare resistance or voltage readings with "actual" temperature, considering the thermometer's margin of error.

Figure 14 - Diagnostic "b Ab" Leaving Water Temperature Sensor

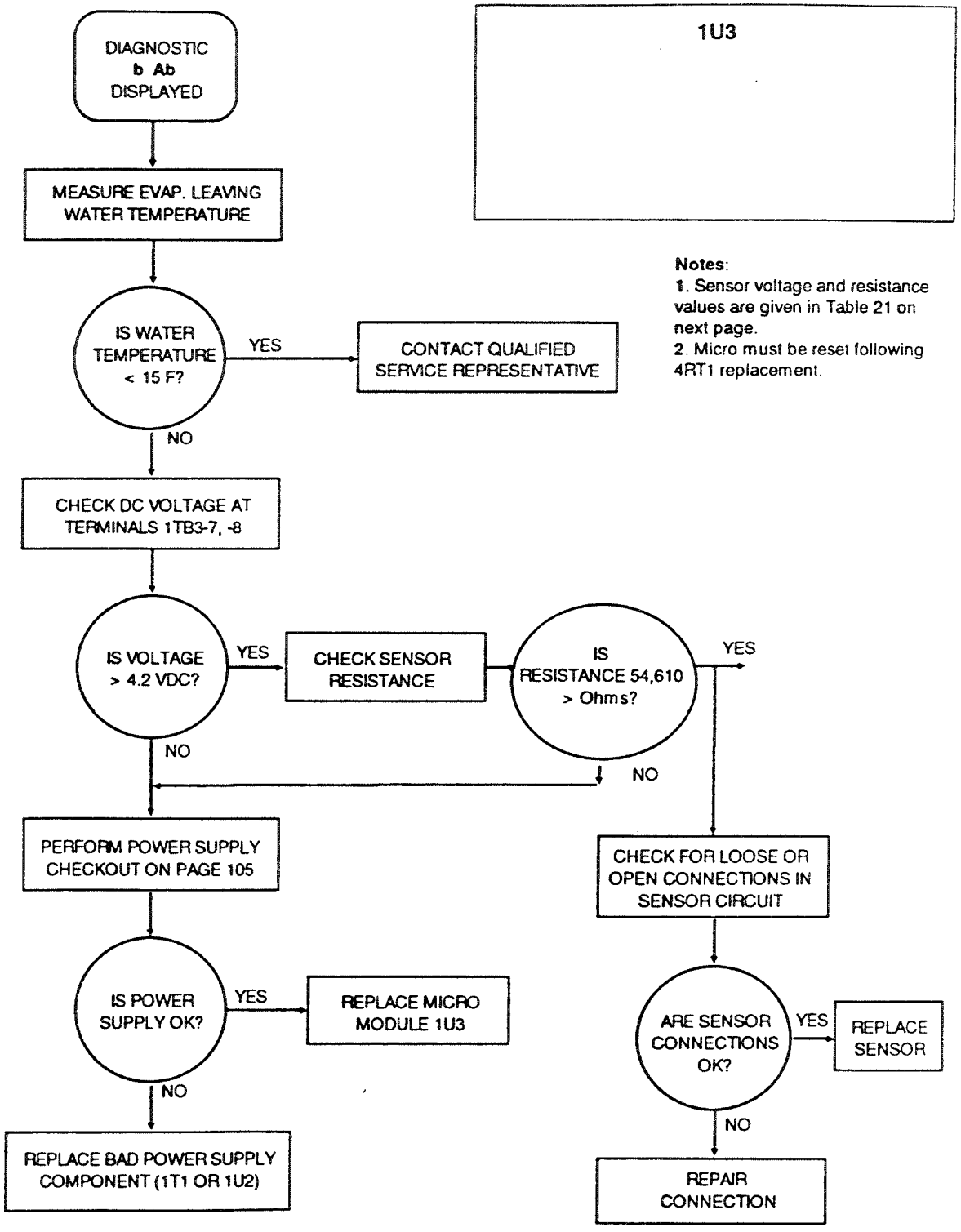

Table 21
Sensor Conversion Data: Evaporator Leaving Water Temperature (4RT1) and Optional Entering Water Temperature Sensors (4RT2)

Actual Temp (F)	Actual Resist. (Ohms)	Thermistor Voltage (Note 3)	Actual Temp (F)	Actual Resist. (Ohms)	Thermistor Voltage (Note 3)
15	54,635.59	4.236	53	18,420.49	2.992
16	52,987.21	4.208	54	17,939.01	2.957
17	51,393.36	4.180	55	17,471.74	2.922
18	49,852.12	4.152	56	17,018.23	2.887
19	48,361.55	4.123	57	16,578.03	2.852
20	46,919.86	4.094	58	16,150.71	2.817
21	45,525.32	4.064	59	15,735.84	2.782
22	44,176.24	4.034	60	15,333.03	2.747
23	42,871.04	4.004	61	14,941.88	2.713
24	41,698.12	3.973	62	14,562.03	2.678
25	40,386.01	3.942	63	14,193.10	2.643
26	39,203.26	3.911	64	13,834.75	2.609
27	38,058.56	3.879	65	13,486.65	2.575
28	36,950.50	3.847	66	13,148.46	2.541
29	35,877.84	3.814	67	12,819.88	2.507
30	34,839.39	3.782	68	12,500.59	2.473
31	33,833.91	3.749	69	12.190.32	2.440
32	32,861.74	3.715	70	11,888.77	2.406
33	31,935.73	3.683	71	11,595.68	2.373
34	31,039.07	3.649	72	11,310.78	2.340
35	30,170.77	3.616	73	11,033.81	2.308
36	29,329.83	3.582	74	10,764.53	2.275
37	28,515.28	3.549	75	10,502.71	2.243
38	27,726.22	3.515	76	10,248.11	2.211
39	26,961.78	3.481	77	10,000.51	2.179
40	26,221.09	3.446	78	9,759.70	2.148
41	25,503.33	3.412	79	9,525.47	2.117
42	24,807.73	3.377	80	9,297.62	2.086
43	24,133.52	3.343	81	9.075.96	2.055
44	23,479.98	3.308	82	8,860.30	2.024
45	22,846,40	3.273	83	8,650.45	1.994
46	22,232.11	3.238	84	8,446.26	1.964
47	21,636.47	3.203	85	8,247.54	1.935
48	21,058.83	3.168	86	8,054.13	1.906
49	20,498.61	3.133	87	7,865.87	1.877
50	19,955.21	3.098	88	7,682.62	1.848
51	19,428.09	3.062	89	7,504.22	1.820
52	18,916.69	3.027	90	7,330.53	1.791

Notes:
1. Sensor 4RT1 is connected between Terminals 1TB3-1 and -2 on micro 1U3; optional sensor 4RT2 is connected between Terminals 1TB3-3 and -4.
2. Overall accuracy for sensors 4TR1 and 4RT2 is ± 1 F from 20-70 F; ± 2 F from 70-90 F; and, ± 2 F from 15-20 F.
3. To determine if thermistor is out of range, compare resistance or voltage readings with "actual" temperature, considering the thermometer's margin of error.

b AC
Condenser Refrigerant Pressure Sensor (Optional)

The b AC diagnostic indicates that the micro module (1U3) has detected a problem with the optional pressure transducer (1R1). The diagnostic will be displayed if the transducer circuit between Terminals 1TB3-9 and 1TB3-10 — or between Terminals 1TB3-10 and 1TB3-11 — is shorted.

Troubleshooting A "b AC" Diagnostic

1. Remove the transducer wires connected to Terminals 1TB3-9, -10 and -11. Check the terminals for stray wires or other short circuits.

2. Reset (clear) the diagnostic at the control panel. If the diagnostic cannot be reset with the transducer disconnected, the micro module (1U3) is defective and must be replaced.

Note: Be sure to perform the power supply checkout procedure before replacing 1U3.

3. Check the wiring between the transducer and the terminal strip for any frayed or smashed areas that could cause a short. Repair same if found.

4. Measure the voltage between Terminals 1TB3-9 and 1TB3-11. This voltage should be 5.0 VDC or greater. If the voltage is less than 5.0 VDC, the micro module (1U3) is defective and must be replaced.

Note: Be sure to perform the power supply checkout procedure before replacing 1U3.

5. Reconnect the black wire to Terminal 1TB3-11 and the red wire to Terminal 1TB3-9. Measure the voltage between Terminals 1TB3-9 and -11. This voltage should be 5.0 VDC or greater. If it is not, the transducer is bad and must be replaced.

6. Connect the white wire to Terminal 1TB3-10. Measure the voltage at 1TB3-10 with respect to 1TB3-11. This voltage should be 2.5 VDC or greater. If it is less than 2.5 VDC, the transducer is bad; replace it. Check leads to ground for shorts in the transducer.

Table 22
Conversion Data for Condenser Pressure Transducer 1R1

Actual Pressure (PSIG)	Input Volts @ 1TB3-10,-11	Actual Pressure (PSIG)	Input Volts @ 1TB3-10,-11	Actual Pressure (PSIG)	Input Volts @ 1TB3-10,-11	Actual Pressure (PSIG)	Input Volts @ 1TB3-10,-11
0.0	4.759	8.0	4.036	16.0	3.313	24.0	2.590
1.0	4.669	9.0	3.946	17.0	3.223	25.0	2.500
2.0	4.579	10.0	3.855	18.0	3.132	26.0	2.409
3.0	4.488	11.0	3.765	19.0	3.042	27.0	2.319
4.0	4.398	12.0	3.675	20.0	2.951	28.0	2.228
5.0	4.307	13.0	3.584	21.0	2.861	29.0	2.138
6.0	4.217	14.0	3.494	22.0	2.771	30.0	2.048
7.0	4.127	15.0	3.403	23.0	2.680	----------	----------

Notes:
1. Optional transducer 1R1 is connected to Terminals 1TB3-9, -10 and -11 on micro module 1U3.
2. Overall accuracy of 1R1 is ± 1 psig from) psig to 25 psig.
3. To determine if the transducer is out of range, compare an input voltage reading withthe "actual" pressure reading indicated by the pressure gauge, considering the precision of the pressure gauge.
4. Due to the type of transducer used, the resistance generated cannot be read with a standard ohmmeter. However, the total resistance measured between the black and red wires should be approximately 10K.

b Ad
Evaporator Refrigerant Temperature Sensor

The evaporator refrigerant temperature sensor (4RT5) is factory-installed in a bulbwell located below the unit control panel, near the bottom of the evaporator shell. Latching diagnostic **b Ad** is initiated prior to start if 4RT5 senses an evaporator refrigerant temperature below -5 F or above 150 F.

Should this occur, use the sensor checkout procedure in Figure 15 to determine whether 4RT5 is open/shorted or malfunctioning. (4RT5 is connected to terminals 1TB3-12 and 1TB3-13 on micro module 1U3.)

Note: The **b Ad** sensor diagnostic normally occurs only during a nonoperating mode, since the evaporator trip setpoint is much higher than -5 F. No normal machine operating conditions will yield an evaporator refrigerant temperature lower than -5 F.

b AE
Ambient Temperature Sensor (Optional)

Latching diagnostic **b AE** occurs when the optional ambient temperature sensor (4RT6) registers an outdoor air temperature exceeding 150 F. If **b AE** appears on the display, determine whether or not 4RT6 is shorted or malfunctioning as described in Figure 16.

The optional ambient temperature sensor is connected between micro module (1U3) terminals 1TB3-14 and 1TB3-15.

b AF, b b0
Bearing Temperature Sensors (Optional)

Two optional sensors (4RT8 and 4RT9) are factory-installed in the oil drain lines of the compressor to monitor bearing temperature. Latching diagnostic **b AF** or **b b0** is displayed if the corresponding sensor (Figure 17, page 67) detects a temperature above the accepted range (i.e., 180 F).

The UCP (i.e., unit control module) checks these sensor inputs before start-up; a diagnostic is generated if either sensor registers a temperature exceeding 180 F. If a **b AF** or **b b0** diagnostic occurs, check the corresponding sensor for a malfunction or electrical short. See Figure 17, page 67 for sensor checkout instructions.

b d9
Extended Power Loss

Occurrence of this nonlatching, "power-up" diagnostic indicates that the UCP detected a power loss lasting 30 line-cycles or longer. All micro inputs are fixed so that memory is retained regardless of power outage duration. No action is required.

Once power is restored, the **b d9** diagnostic is retained in the "Last Diagnostic Code" register, and the UCP automatically initiates a "power-on" reset and the chiller will return to normal operation. Power losses lasting less than 30 line-cycles are considered "momentary". See "b E2: Momentary Power Loss" for further information.

Figure 15 - Diagnostic "b Ad"
Evaporator Refrigerant Temperature Sensor

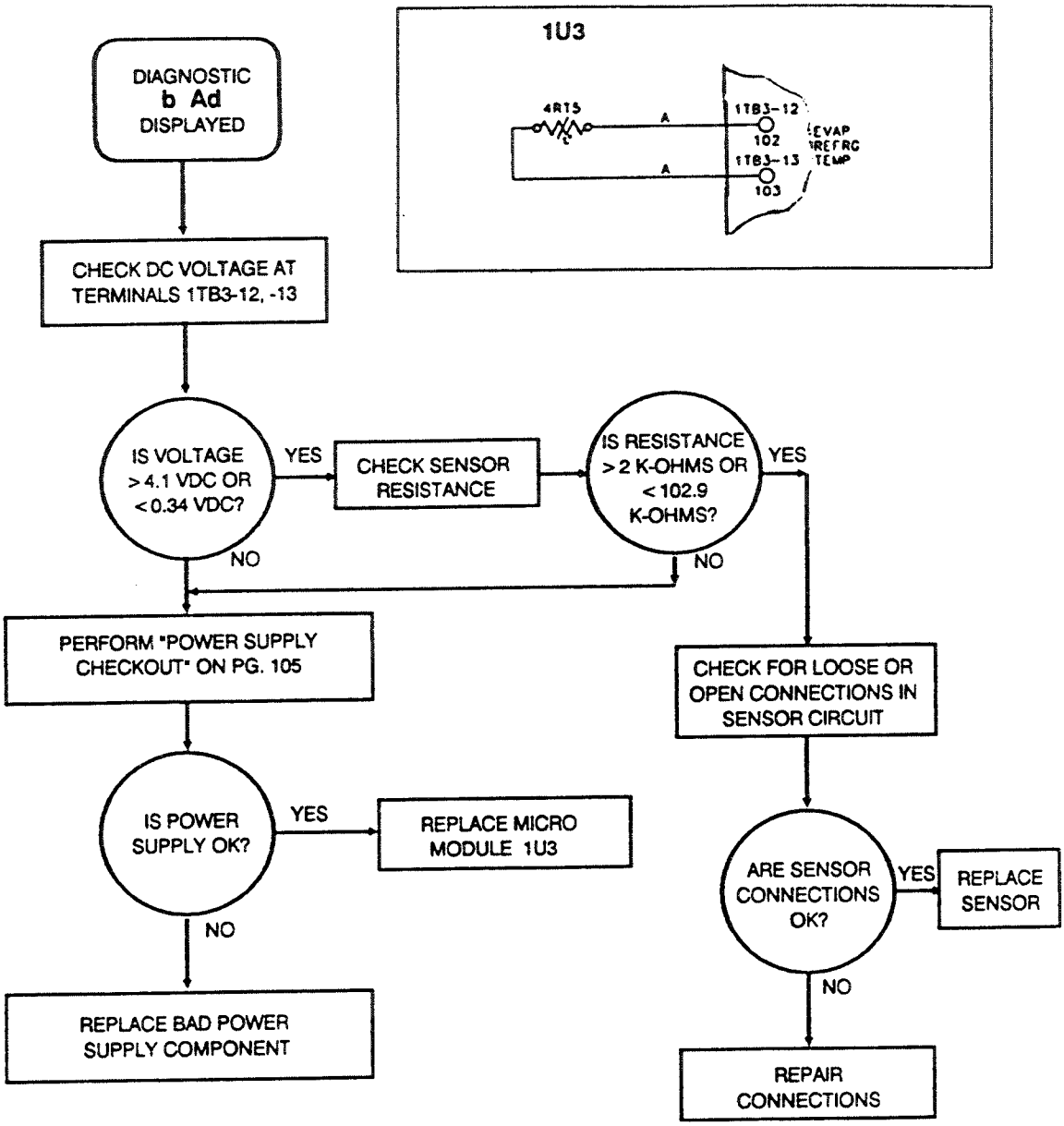

Notes:
1. Sensor voltage and resistance values are given in Table 23 on next page.
2. Micro must be reset following 4RT5 replacement.

Table 23
Sensor Conversion Data: Evaporator Refrigerant Temperature Sensor (4RT5)

Actual Temp. (F)	Actual Resist. (Ohms)	Thermistor Voltage (Note 3)	Actual Temp (F)	Actual Resist. (Ohms)	Thermistor Voltage (Note 3)	Actual Temp. (F)	Actual Resist. (Ohms)	Actual Voltage (Note 3)	Actual Temp. (F)	Actual Resist. (Ohms)	Actual Voltage (Note 3)
-5	102,906.40	4.082	34	31,039.07	2.693	73	11,033.81	1.429	112	4,462.27	0.690
-4	99,604.04	4.052	35	30,170.77	2.655	74	10,764.53	1.404	113	4,366.29	0.677
-3	96,417.76	4.022	36	29,329.83	2.618	75	10,502.71	1.379	114	4,272.67	0.664
-2	93,343.04	3.991	37	28,515.28	2.581	76	10,248.11	1.354	115	4,181.34	0.652
-1	90,375.79	3.960	38	27,726.22	2.545	77	10,000.51	1.330	116	4,092.24	0.640
0	87,511.82	3.928	39	26,961.78	2.508	78	9,759.70	1.305	117	4,005.31	0.628
1	84,747.29	3.896	40	26,221.09	2.471	79	9,525.47	1.282	118	3,920.49	0.616
2	82,078.42	3.864	41	25,503.33	2.435	80	9,297.62	1.258	119	3,837.72	0.604
3	79,501.66	3.831	42	24,807.73	2.399	81	9,075.96	1.236	120	3,756.95	0.593
4	77,013.47	3.798	43	24,133.52	2.363	82	8,860.30	1.213	121	3,678.12	0.582
5	74,610.62	3.764	44	23,479.98	2.328	83	8,650.45	1.191	122	3,601.11	0.571
6	72,290.00	3.730	45	22,846.40	2.292	84	8,446.26	1.169	123	3,526.48	0.561
7	70,048.44	3.700	46	22,232.11	2.257	85	8,247.54	1.147	124	3,453.62	0.550
8	67,883.04	3.661	47	21,636.47	2.222	86	8,054.13	1.126	125	3,382.47	0.540
9	65,790.95	3.626	48	21,058.83	2.187	87	7,865.87	1.105	126	3,313.00	0.530
10	63,769.60	3.591	49	20,498.61	2.153	88	7,682.62	1.085	127	3,245.16	0.520
11	61,816.30	3.555	50	19,955.21	2.119	89	7,504.22	1.065	128	3,178.90	0.511
12	59,928.60	3.520	51	19,428.09	2.085	90	7,330.53	1.045	129	3,114.19	0.501
13	58,104.07	3.484	52	18,916.69	2.052	91	7,161.41	1.026	130	3,050.99	0.492
14	56,340.49	3.447	53	18,420.49	2.019	92	6,996.74	1.007	131	2,989.25	0.483
15	54,635.59	3.411	54	17,939.01	1.986	93	6,836.36	0.988	132	2,928.94	0.474
16	52,987.21	3.374	55	17,471.74	1.953	94	6,680.17	0.970	133	2,870.02	0.466
17	51,393.36	3.337	56	17,018.74	1.921	95	6,528.05	0.951	134	2,812.45	0.457
18	49,852.12	3.300	57	16,578.03	1.889	96	6,379.86	0.934	135	2,756.20	0.449
19	48,361.55	3.262	58	16,150.71	1.858	97	6,235.50	0.916	136	2,701.24	0.440
20	46,919.86	3.225	59	15,735.84	1.827	98	6,094.87	0.899	137	2,647.54	0.432
21	45,525.32	3.187	60	15,333.03	1.796	99	5,957.84	0.882	138	2,595.05	0.425
22	44,176.24	3.149	61	14,941.88	1.766	100	5,824.32	0.866	139	2,543.76	0.417
23	42,871.04	3.111	62	14,562.03	1.736	101	5,694.22	0.850	140	2,493.62	0.409
24	41,608.12	3.073	63	14,193.10	1.706	102	5,567.42	0.834	141	2,444.62	0.402
25	40,386.01	3.035	64	13,834.75	1.677	103	5,443.84	0.818	142	2,396.72	0.395
26	39,203.26	3.000	65	13,486.65	1.648	104	5,323.39	0.803	143	2,349.89	0.387
27	38,058.56	2.959	66	13,148.46	1.619	105	5,205.97	0.788	144	2,304.11	0.380
28	36,950.50	2.920	67	12,819.88	1.591	105	5,091.51	0.733	145	2,259.35	0.374
29	35,877.84	2.882	68	12,500.59	1.563	107	4,979.91	0.758	146	2,215.59	0.367
30	34,839.39	2.844	69	12,190.32	1.536	108	4,871.11	0.744	147	2,172.80	0.360
31	33,833.91	2.806	70	11,888.77	1.508	109	4,765.02	0.730	148	2,130.95	0.354
32	32,861.74	2.768	71	11,595.68	1.482	110	4,661.56	0.717	149	2,090.03	0.347
33	31,935.73	2.730	72	11,310.78	1.455	111	4,560.67	0.703	150	2,050.01	0.341

Notes:

1. Refrigerant temperature sensor 4RT5 is connected to 1U3 at 1TB4-12 and -13; overall accuracy is ± 0.80 F at 29 F, ± 1.0 F at 30.0 F, ± 2.0 from 0-26 F, and from 31-34 F, ± 5 F from -10 to -1 F and from 35-70 F.
2. To determine if thermistor is out of range, compare resistance or voltage readings with "actual" temperature, considering the thermometer's margin of error.

Figure 16 - Diagnostic "b AE" Ambient Temperature Sensor (Optional)

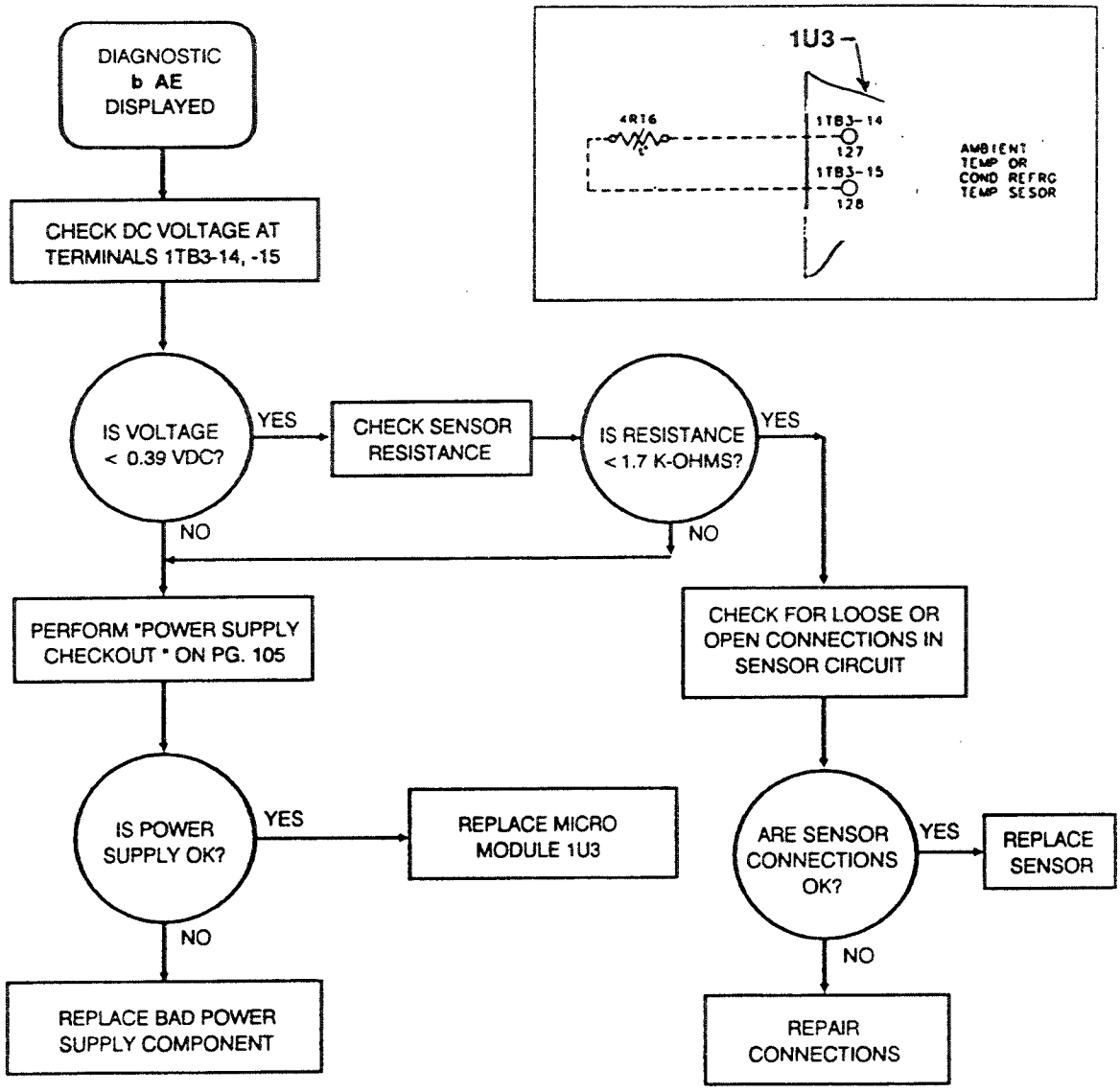

Notes:
1. Sensor voltage and resistance values are given in Table 24 on next page.
2. Micro must be reset following 4RT6 replacement.

Table 24
Sensor Conversion Data: Optional Ambient Temperature Sensor (4RT6)

Actual Temp. (F)	Actual Resist. (Ohms)	Thermistor Voltage (Note 3)	Actual Temp. (F)	Actual Resist. (Ohms)	Thermistor Voltage (Note 3)	Actual Temp. (F)	Actual Resist. (Ohms)	Actual Voltage (Note 3)	Actual Temp. (F)	Actual Resist. (Ohms)	Actual Voltage (Note 3)
-5	102,906.40	4.449	31	33,833.91	3.201	67	12,819.88	1.900	103	5,443.84	1.007
-4	99,604.04	4.421	32	32,861.74	3.162	68	12,500.59	1.868	104	5,323.39	0.988
-3	96,417.76	4.393	33	31,935.73	3.123	69	12,190.32	1.837	105	5,205.97	0.970
-2	93,343.04	4.364	34	31,039.07	3.085	70	11,888.77	1.807	106	5,091.51	0.953
-1	90,375.79	4.335	35	30,170.77	3.046	71	11,595.68	1.777	107	4,979.91	0.935
0	87,511.82	4.305	36	29,329.83	3.008	72	11,310.78	1.747	108	4,871.11	0.918
1	84,747.29	4.274	37	28,515.28	2.969	73	11,033.81	1.718	109	4,765.02	0.902
2	82,078.42	4.244	38	27,726.22	2.931	74	10,764.53	1.688	110	4,661.56	0.885
3	79,501.66	4.212	39	26,961.78	2.893	75	10,502.71	1.660	111	4,560.67	0.869
4	77,013.47	4.181	40	26,221.09	2.885	76	10,248.11	1.631	112	4,462.27	0.853
5	74,610.62	4.149	41	25,503.33	2.816	77	10,000.51	1.604	113	4,366.29	0.838
6	72,290.00	4.116	42	24,807.73	2.778	78	9,759.70	1.576	114	4,272.67	0.822
7	70,048.44	4.083	43	24.133.52	2.741	79	9,525.47	1.549	115	4,181.34	0.807
8	67,883.04	4.050	44	23,479.98	2.703	80	9,297.62	1.522	116	4,092.24	0.793
9	65,790.95	4.016	45	22,846.40	2.665	81	9,075.96	1.496	117	4,005.31	0.778
10	63,769.60	3.982	46	22.232.11	2.628	82	8,860.30	1.470	118	3,920.49	0.764
11	61,816.30	3.948	47	21,636.47	2.591	83	8,650.45	1.444	119	3,837.72	0.750
12	59,928.60	3.913	48	21,058.83	2.553	84	8,446.26	1.419	120	3,756.95	0.736
13	58,104.07	3.878	49	20,498.61	2.517	85	8,247.54	1.394	121	3,678.12	0.723
14	56,340.49	3.843	50	19,955.21	2.480	86	8,054.13	1.369	122	3,601.11	0.710
15	54,635.59	3.807	51	19,428.09	2.444	87	7,865.87	1.345	123	3,526.48	0.697
16	52,987.21	3.771	52	18,916.69	2.407	88	7,682.62	1.321	124	3,453.62	0.694
17	51,393.36	3.734	53	18,420.49	2.372	89	7,504.22	1.300	125	3,382.47	0.672
18	49,852.12	3.698	54	17,939.01	2.336	90	7,330.53	1.275	126	3,313.00	0.660
19	48,361.55	3.661	55	17,471.74	2.300	91	7,161.41	1.252	127	3,245.16	0.648
20	46,919.86	3.623	56	17,018.23	2.265	92	6,996.74	1.230	128	3,178.90	0.636
21	45,525.32	3.590	57	16,578.03	2.231	93	6,836.36	1.208	129	3,114.19	0.625
22	44,176.24	3.548	58	16,150.71	2.196	94	6,680.17	1.186	130	3.050.99	0.614
23	42,871.04	3.510	59	15,735.84	2.162	95	6,528.05	1.165	131	2,989.25	0.602
24	41,608.12	3.472	60	15,333.03	2.128	96	6,379.86	1.144	132	2,928.94	0.592
25	40,386.01	3.434	61	14,941.88	2.094	97	6,235.50	1.123	133	2,870.02	0.581
26	39,203.26	3.395	62	14,562.03	2.061	98	6,094.87	1.103	134	2,812.45	0.571
27	38,058.56	3.357	63	14,193.10	2.028	99	5,957.84	1.083	135	2,756.20	0.560
28	36,950.50	3.318	64	13,834.75	1.995	100	5,824.32	1.063	—	—	—
29	35,877.84	3.279	65	13,486.65	1.963	101	5,694.22	1.044	—	—	—
30	34,839.39	3.240	66	13,148.46	1.931	102	5,567.42	1.025	—	—	—

Notes:

1. Optional ambient temperature sensor 4RT6 is connected to 1U3 at 1TB3-14 and -15; overall accuracy is ± 3 from 0-70 F, ± 5 F from -5 to 0 F, ± 8 F from 70-135 F .2. To determine if thermistor is out of range, compare resistance or voltage readings with "actual" temperature, considering the thermometer's margin of error. 3. As you compare a thermistor resistance (or input voltage) reading with the actual temperature indicated by the thermometer, be sure to consider the precision of the thermometer when you decide whether or not the thermistor is out of range.

Figure 17 - Diagnostics "b AF" and "b bO" Bearing Temperature Sensors (Optional)

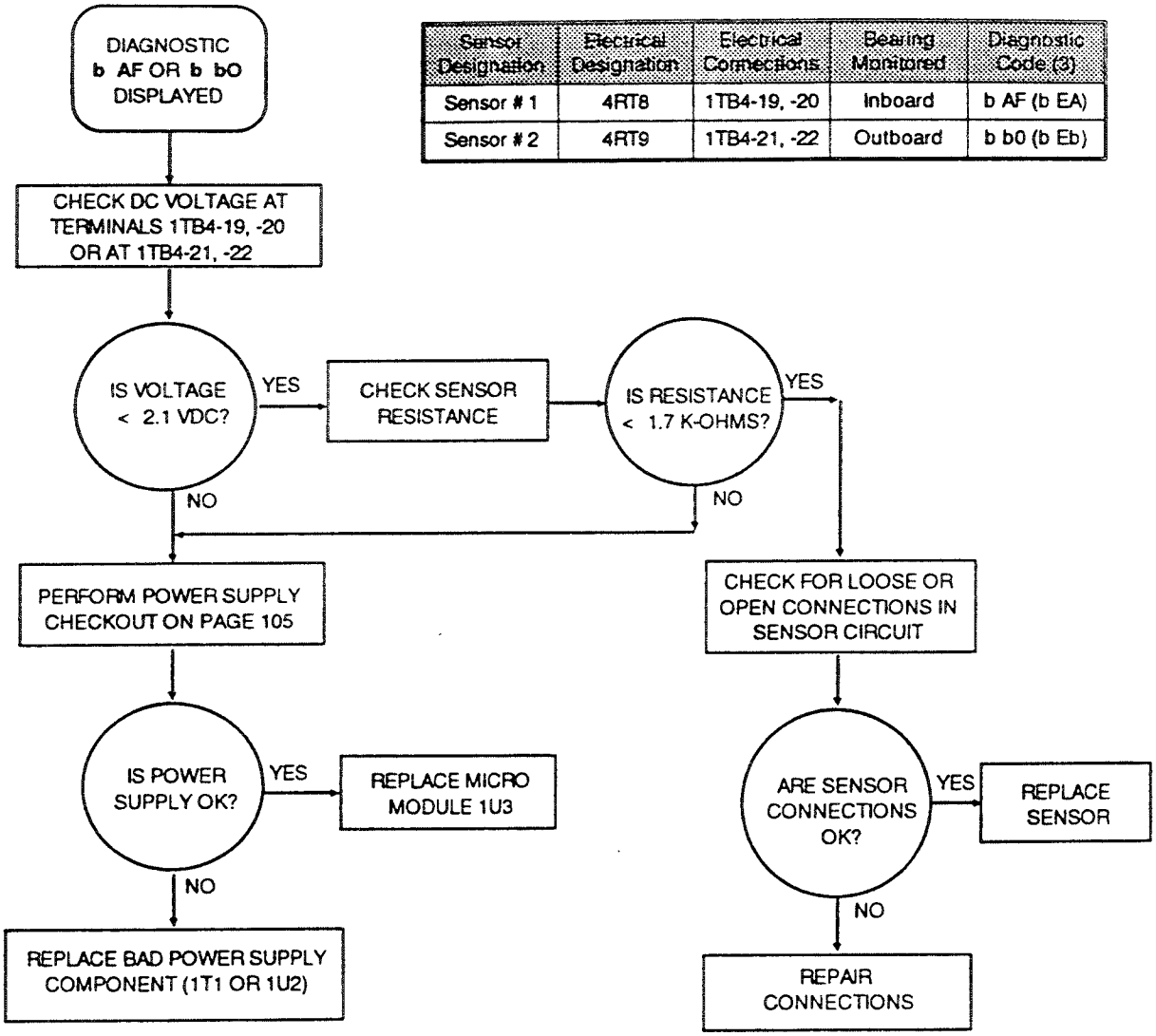

Sensor Designation	Electrical Designation	Electrical Connections	Bearing Monitored	Diagnostic Code (3)
Sensor # 1	4RT8	1TB4-19, -20	Inboard	b AF (b EA)
Sensor # 2	4RT9	1TB4-21, -22	Outboard	b b0 (b Eb)

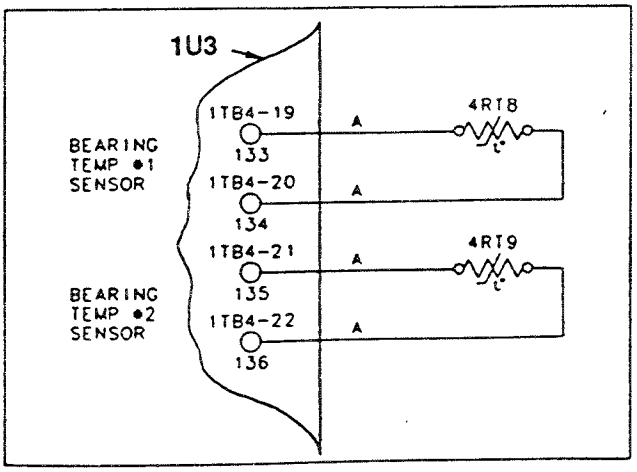

Notes:

1. Sensor voltage and resistance values are given in Table 20 on page 58.
2. Micro must be reset following 4RT8 or 4RT9 replacement.
3. Diagnostic codes **b AF** and **b bO** occur only during non-operating modes; diagnostics **b EA** and **b Eb** are "running" diagnostics that are generated whenever the UCP detects a high bearing temperature (i.e., > 180 F).

b dA
Surge

Occurrence of latching diagnostic **b dA** indicates that the UCP detected a surge condition during unit operation. Surge detection is based on current fluctuations in one of the three motor phases. To trigger the surge diagnostic, 5 fluctuations exceeding a special RMS-average current value and rate must occur within a 60-second time frame.

Initial detection of surge results in the energizing of an optional head relief request relay (i.e., K3 on relay output module 1U1). If the surge condition continues for 15 minutes, the UCP shuts down unit operation on latching diagnostic **b dA**.

"Surge" results from an unusually high pressure differential across the compressor. A partial list of chiller operating conditions that can produce surge is provided below:

[ ] high condenser water temperature
[ ] excessive air in the unit;
[ ] insufficient condenser water flow;
[ ] fouled condenser tubes; and,
[ ] a shortage of refrigerant.

If the unit locks out on a surge diagnostic, check for--and correct--these problem conditions before restarting the chiller.

Note: To override the surge protection (and phase imbalance) feature, move DIP switch no. 7 on DIP switch block S3 to the ON position.

b dc
Condenser Water Flow Overdue

During the start sequence, the UCP closes condenser water pump relay K6 (i.e., located between terminals 1TB1-4 and 1TB1-5 on relay output module 1U1). Closure of the K6 contacts issues a signal to start the condenser water pump. As the UCP checks for condenser water flow, the operating code appearing on the display changes from **A 70** (restart inhibit) to **A 71** (establish condenser water flow).

If flow is not proven (i.e., condenser water flow switch 5S3 does not close) within 3 minutes of K6 contact closure, the unit will shut down on latching diagnostic **b dc**.

A number of component malfunctions and operating problems can result in a "condenser water flow overdue" diagnostic; below is a partial list:

1. faulty condenser water pump relay (K6);
2. faulty condenser water pump contactor (5K2);
3. faulty condenser water pump auxiliary contactor (5K2);
4. faulty condenser water flow switch (5S3);
5. faulty condenser water pump relay (1K17);
6. closed condenser water circuit valves;
7. condenser water circuit valves are open to too many machines; and,
8. plugged condenser water circuit strainers.

Before restarting the chiller, determine why condenser water flow was not established and correct the problem.

Note: To troubleshoot the condenser water pump electrical circuit, (i.e., Items 1 through 5 above), refer to Figure 18 on the next page.

Figure 18 - Diagnostic "b dc" Condenser Water Flow Overdue

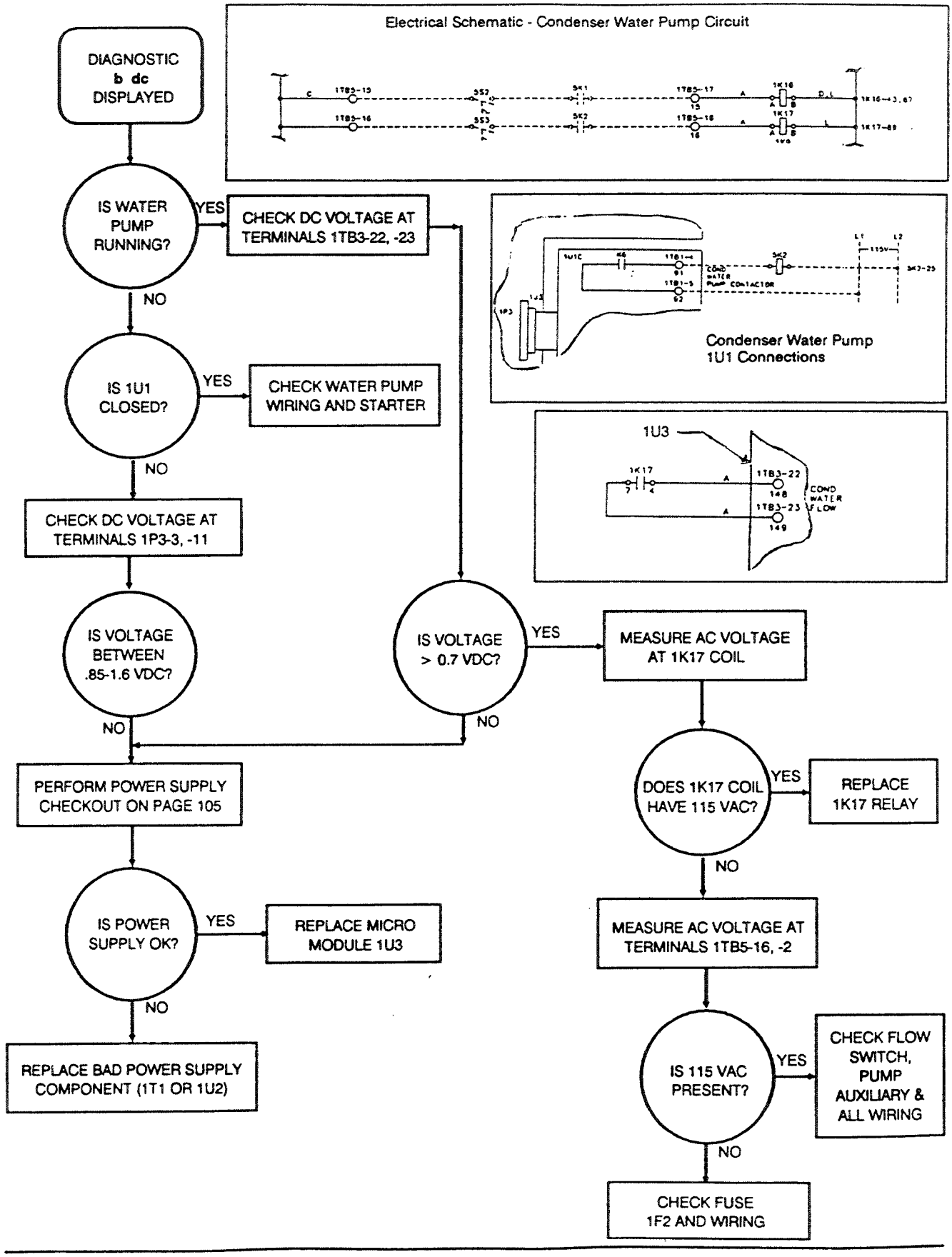

b E2
Momentary Power Loss

Occurrence of this nonlatching diagnostic indicates that there was a brief loss of power. The CT input to the micro must drop below 23% of RLA for a period of at least 2 or 3 line-cycles in order for the micro module to detect it; 1U3 will then take the chiller off-line within 6 line-cycles (i.e., including detection time). Momentary power losses of this type are usually caused by an automatic switching gear in the main power lines.

A power loss lasting from 1 to 30 line-cycles results in a normal unit shutdown (i.e., the oil pump continues to run). The UCP undergoes a "power-on" reset and follows the normal start-up criteria. Diagnostic **b E2** is then stored in the "Last Diagnostic Code" entry of the display menu.

If the power interruption lasts more than 30 line-cycles, the UCP identifies this as an "extended power loss" and initiates a "power-on" reset after power is restored. The **b d9** diagnostic is retained in the "Last Diagnostic Code" register, and the unit follows the normal start-up criteria (e.g., restart inhibit, differential-to-start, etc.). (See "b d9: Extended Power Loss".) To troubleshoot an occurence of this diagnostic, refer to Figure 19 on the next page.

Note: The UCP identifies a "momentary power loss" condition when the incoming current is below 23% of the rated load amps (RLA).

b E3
Phase Imbalance (Optional)

Latching diagnostic **b E3** occurs when a phase imbalance exceeding 15% occurs. The UCP recognizes that a phase imbalance condition exists when the following criteria are met:

[ ] the chiller is operating in one of the "run" modes (see Table 2, page 9);
[ ] the average 3-phase current is greater than 80% of the RLA;
[ ] the imbalance exists for longer than 1 second; and,
[ ] the percent of imbalance is greater than 15%.

Note: The percent of imbalance is calculated using this equation–

$$\frac{I_{Ph\#} - I_{Avg}}{I_{Avg}} \times 100$$

where $I_{Ph\#}$ is one of the 3 phases, and $I_{Avg} = \frac{IPh1 + IPh2 + IPh3}{3}$

Two possible (but not the only) causes of a phase imbalance are: (1) a voltage imbalance of the incoming power, and (2) a resistance imbalance of the compressor motor windings. (The latter is very rare because of the stringent specifications employed by the motor manufacturer during the winding and testing of new motors.)

If unit is equipped with an optional PFCC be sure to check for proper wire routing or refer to CVHE-IN-6 for additional information on PFCC.

Figure 19 - Diagnostic "b E2" Momentary Power Loss

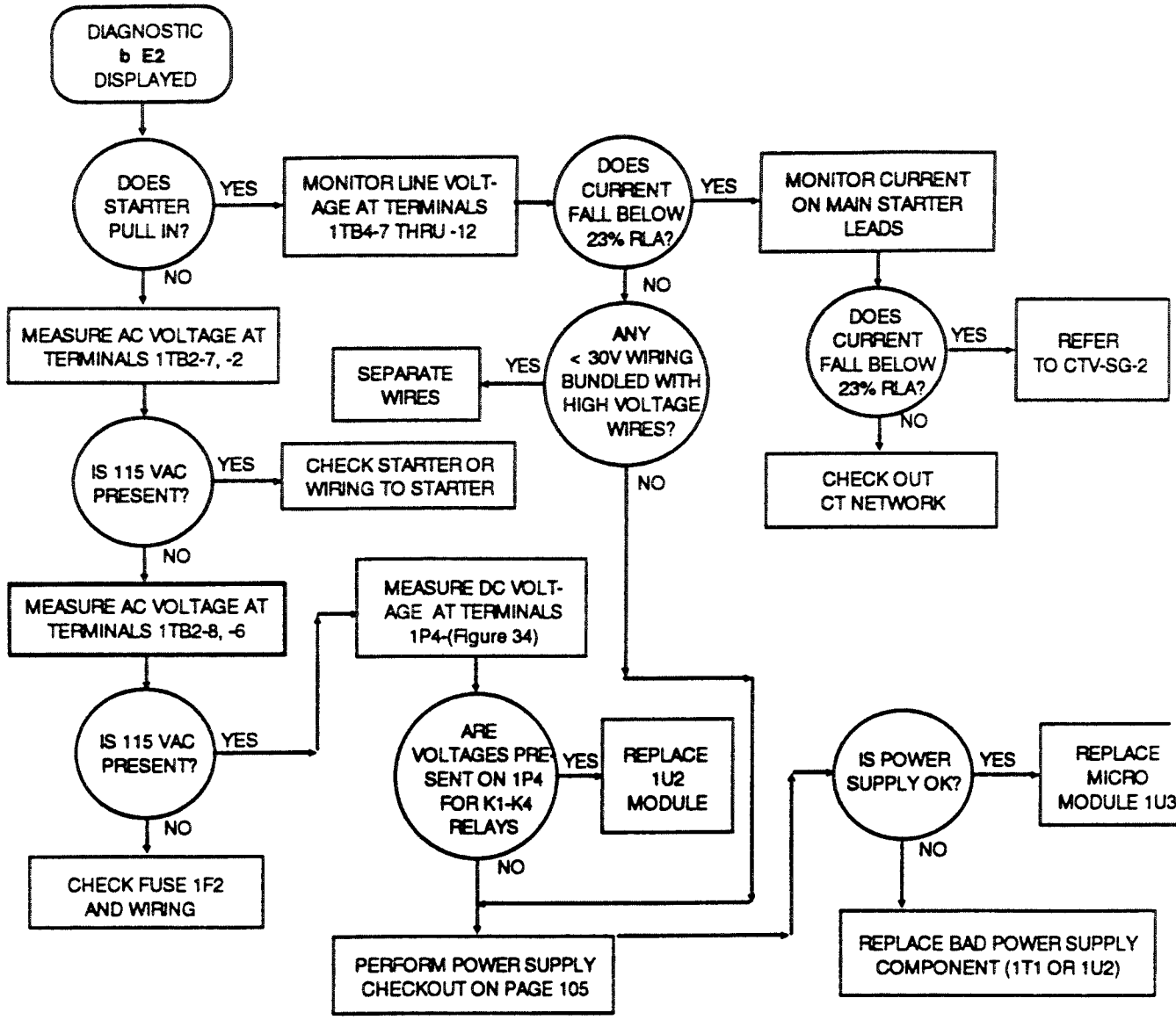

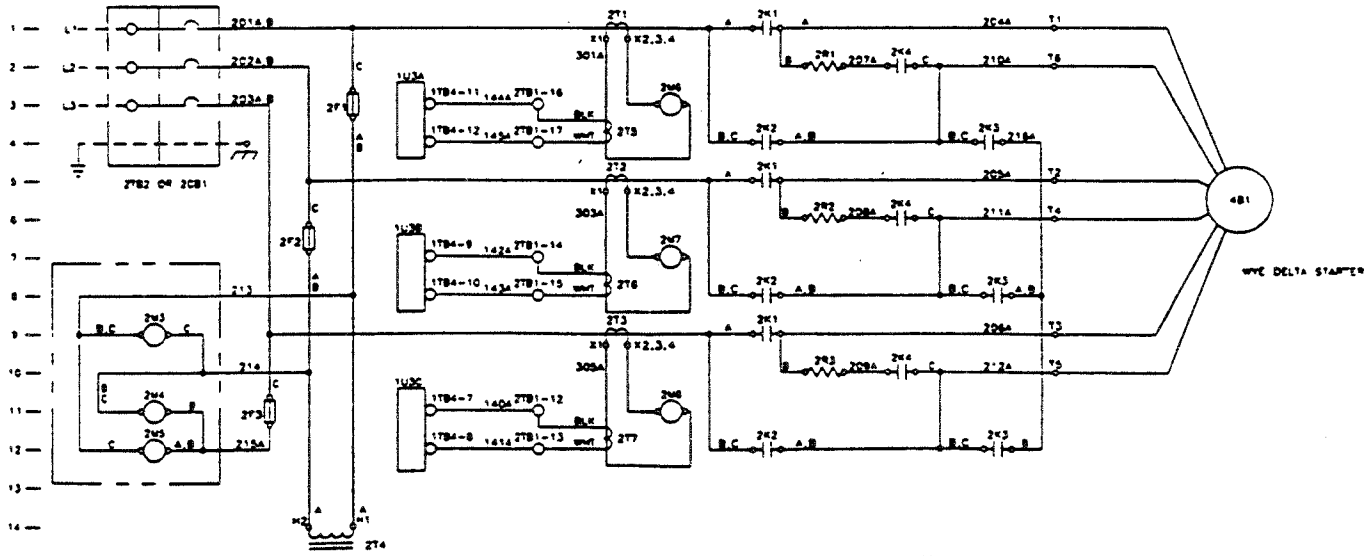

To determine whether the fault lies with the line power or the motor, follow this procedure:

WARNING: To prevent injury or death due to electrical shock, use extreme care when working with energized electrical equipment.

Note: Amperage measured must be line current (not phase current), and should be measured at the line side of the starter (i.e., incoming power lines). Measure voltage at the motor terminals while the unit is operating; any voltage imbalance related to the starter or to wiring resistance will be included in the imbalance calculations.

1. Voltage imbalance can be caused by a voltage drop across any of the starter panel components:

a. Measure voltage across each of the starter components to the motor terminals on each phase while the unit is operating.

b. Use the low (i.e., 0 to 5 volts) scale of a volt-ohmmeter to read the voltage on either side of the same electrical phase on all contactors, fuses, circuit breakers, leads, etc. There should not be any appreciable voltage drop across any of these circuits.

If a measured voltage drop is observed across a lead or contactor, a poor connection or worn contact is indicated. Repair or replace as necessary.

c. If the results of Steps 1a and 1b indicate that the voltage imbalance is not caused by the starter or motor leads, contact the power company.

2. If there is a current imbalance with no measurable voltage imbalance, determine whether a motor or line problem exists. To do this, rotate the motor leads to verify whether the current imbalance stays with one particular motor winding, or follows one set of phase leads as the wires are rotated. Operate the motor just long enough to obtain current readings. (Since some motors have unidirectional bearings, rotate the motor leads twice to maintain proper motor rotation.)

If the current imbalance follows one set of phase leads, the incoming power is at fault and may be the result of unbalanced impedance or resistance somewhere in the power system.

Contact the power company for assistance.

If the current imbalance remains with a particular motor winding, contact the La Crosse Service Department with complete nameplate information.

Note: To override the phase imbalance (and surge) feature, move DIP switch no. 7 on DIP switch block S3 to the ON position.

b E4
Phase Loss

Occurrence of this latching diagnostic indicates that 1 leg of the 3-phase power supply has been lost. The phase loss "threshold" recognized by the UCP is any phase that drops below 23% of the RLA for more than 1 second.

A variety of causes can result in a phase loss condition; three of these include: (1) a blown fuse or breaker in one leg; (2) an incomplete or open line connector to one leg; and (3) a burned or open motor winding.

Be sure to determine and correct the fault condition that created the phase loss before restarting the unit.

b E5
Phase Reversal

Latching diagnostic **b E5** is generated by the UCP within 1 second of its detection of a counterclockwise phase rotation in the incoming power. (For proper machine operation, the incoming power must be phased for clockwise rotation.)

Possible reasons for a phase reversal condition include–but are not limited to–these:

1. incoming power is phased for counterclockwise rotation;

2. current transformer polarity (i.e., primary or secondary) is reversed;

3. a current transformer wiring error; and,

4. an electrical connection error between the current transformer and micro module 1U3.

If phase rotation is incorrect, the unit will shut down on the **b E5** diagnostic when a start-up is attempted. To reverse the rotation, change the phasing at the incoming power to the starter. Do not attempt to change rotation at the motor terminals!

WARNING: To prevent injury or death due to electrical shock, open chiller disconnect switch before reversing phasing.

If you determine that the incoming power is phased correctly, conduct a thorough checkout of the current transformer polarity and wiring. (Current transformer checkout is provided in the "Checkout Procedure for Compressor Transition Relay" section of this bulletin.)

b E7
High Motor Temperature

Three RTD-type sensors embedded in the motor windings enable the UCP to monitor the temperature of the compressor motor. If the UCP detects a motor winding temperature exceeding 265 F (i.e., ± 15 F, UCP error only), it initiates a latching diagnostic. Code **b E7** flashes on the control panel display and the unit is shut down.

Below is a list of some of the circumstances that can result in a "high motor temperature" diagnostic:

1. inaccurate sensor response or open sensor (i.e., check the sensors and micro module 1U3);

2. plugged motor cooling orifice;

3. plugged motor cooling drain lines;

4. "low voltage" condition, resulting in over-amperage; and,

5. motor operation in excess of the RLA.

To diagnose an occurence of this diagnostic, refer to Figure 20 on the next page.

Figure 20 - Diagnostic "b E7" High Motor Temperature

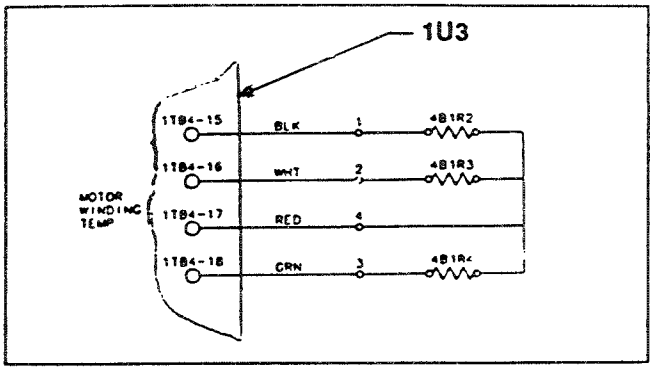

DIAGNOSTIC b E7 DISPLAYED

RESET DIAGNOSTIC

IS b A4, b A7 OR b A8 DISPLAYED?

YES → REFER TO FIGURE 11, PAGE 53.

NO

MEASURE DC VOLTAGE AT TERMINALS 1TB4-15, -16, -17, -18

IS VOLTAGE > 0.509 VDC?

YES → DOES VOLTAGE CORRESPOND WITH RESISTANCE? (TABLE 19 PG. 54)

YES → CHECK MOTOR COOLING SYSTEM

NO

NO

PERFORM "POWER SUPPLY CHECKOUT" ON PG. 105

IS POWER SUPPLY OK?

YES → REPLACE MICRO MODULE 1U3

NO

REPLACE BAD POWER SUPPLY COMPONENT

b E8
Differential Oil Pressure Switch

One of the UCP695 control panel's safety features requires micro module 1U3 to check the status of the differential oil pressure switch (1S2) between compressor starts: it must open after each compressor shutdown. If switch 1S2 does not open before the UCM initiates oil pump operation during the next unit start sequence, a latching diagnostic occurs. Code **b E8** flashes on the display and the chiller start sequence is aborted. This diagnostic condition will occur if the oil pump switch (i.e., on the control panel front) is set at "On" when a start-up is attempted. To diagnose an occurence of this diagnostic, refer to Figure 21 on the next page.

To check for proper operation of switch 1S2, monitor terminals 1TB4-1 and 1TB4-2 while manually starting and stopping the oil pump with the oil pump switch. If 1S2 is functioning correctly, the differential oil pressure switch will close when the pressure differential rises to 15 psid and open when it falls to 9 psid. Before condemning micro module 1U3, ensure that the contacts of switch 1S2 are clean and dry, and that there are no wiring errors (e.g., a strand crossover at the terminal strip).

Note: Diagnostic **b E8** normally occurs only during the chiller start sequence. It does not occur when a low oil pressure condition is detected. (See "b F2: Low Oil Pressure".)

b E9
Stop Relay

This latching diagnostic is generated if you attempt to shut down the chiller, but the UCM continues to detect current; when this situation occurs, the UCM takes the chiller off-line by opening the overload relay.

During the normal stop sequence, the micro module opens both the stop relay (1U2K2) and the overload relay (1U2K3), which interrupts the "run" signal to the starter. If the motor current does not drop to zero when the "run" signal is interrupted, the micro module will display the latching diagnostic **b E9**.

Probable causes for a **b E9** diagnostic include:

a. failure of starter pilot relay 2K5;
b. failure of main starter contactors 2K1 and 2K2;
c. failure of control modules 1U3 and/or 1U2.

Note: The **b E9** diagnostic indicates a serious problem with the control system. If the module is displaying the **b E9** diagnostic and the chiller is still running, operation will have to be interrupted using the main disconnect switch. Use caution when opening the disconnect as they generally are not designed to interrupt large current flows.

1. With the main disconnect open, inspect the starter contactors 2K1, 2K2, 2K3, 2K4 and 2K5. If any of these contactors are in the closed position, determine what caused the failure and correct it. Be certain that none of the contactors are closed or can pass current through their contacts before continuing.

WARNING: To prevent personal injury or death due to electrocution, be certain that contacts of starter contactors are open.

2. Remove Wire #3 from the starter-side of 2TB1-3 in the starter panel. (**Note**: This wire provides the control voltage to the starter circuit through the N.O. 2K5 relay contacts.)

3. With the chiller switch in the STANDBY/RESET position, close the main disconnect switch to energize the control panel.

Figure 21 - Diagnostic "b E8"
Differential Oil Pressure Switch

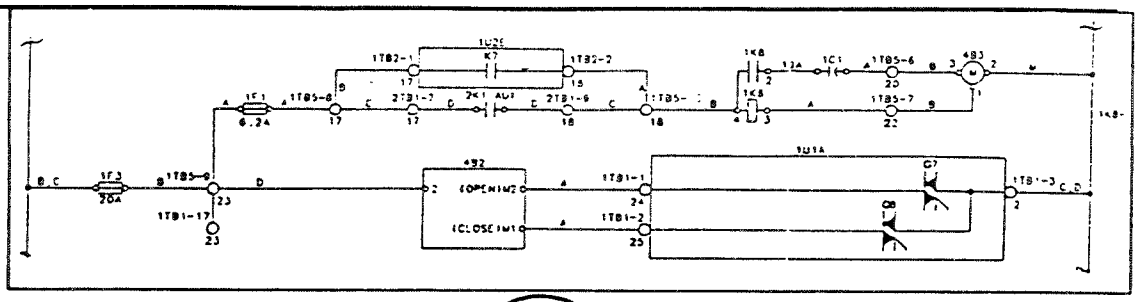

DIAGNOSTIC b E8 DISPLAYED

RESET DIAGNOSTIC

IS OIL PUMP RUNNING BEFORE A 72?
- YES → CHECK POSITION OF OIL PUMP SWITCH
  - IS SWITCH IN ON POSITION?
    - YES → TURN SWITCH TO AUTO
    - NO → CHECK POSITION OF 2K1 AUXILIARY CONTACTS
      - ARE CONTACTS CLOSED?
        - YES → CHECK OUT STARTER
        - NO → CHECK POSITION OF 1U2-K7 CONTACTS
          - ARE CONTACTS CLOSED?
            - YES → MEASURE DC VOLTAGE AT PLUG 1P4-4, -11
              - IS VOLTAGE BETWEEN 0.85-1.6 VDC?
                - YES → PERFORM "POWER SUPPLY CHECKOUT" ON PG. 105
                - NO → REPLACE 1U2 MODULE
            - NO → CHECK FOR SHORTED WIRES
- NO → MEASURE DC VOLTAGE AT TERMINALS 1TB4-1, -2
  - IS VOLTAGE > 0.7 VDC?
    - YES → PERFORM "POWER SUPPLY CHECKOUT" ON PG. 105
    - NO → CHECK CONDITION OF SWITCH 1S2
      - IS 1S2 CLOSED?
        - YES → REPLACE SWITCH 1S2
        - NO → CHECK FOR SHORTED WIRING

PERFORM "POWER SUPPLY CHECKOUT" ON PG. 105
- IS POWER SUPPLY OK?
  - YES → REPLACE MICRO MODULE 1U3
  - NO → REPLACE BAD POWER SUPPLY COMPONENT

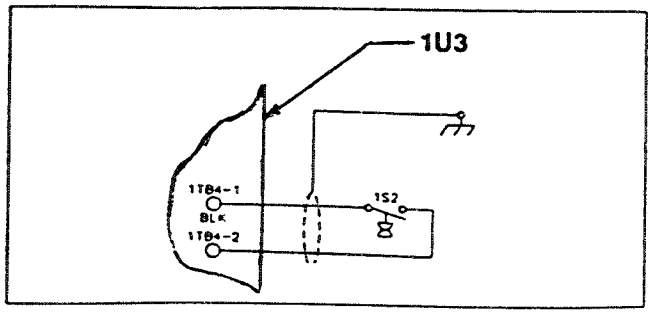

4. Check and record the voltages at the following pins on ribbon connector 1P4:

a. Pin 5 with respect to Pin 14 = should be 0.0-0.1 VDC;
b. Pin 7 with respect to Pin 14 = should be 0.0-0.1 VDC;
c. Pin 8 with respect to Pin 14 = should be 0.85 to 1.6 VDC.

i) If any of the measured voltages are out of range, module 1U3 is bad; replace it.
ii) If the measured voltages are in range, go to Step 5.

5. Check the control voltage at Terminals 1TB2-9 and 1TB2-8 with respect to Terminal 1TB5-3.

i) If control voltage is not present at 1TB2-9, check fuses 1F2 and 1F4, and the power supply transformer 2T4.
ii) If control voltage (115 VAC) is measured at both terminals, 1U2 is bad; replace it.
iii) If control voltage is measured at 1TB2-9 but not at 1TB2-8, go to Step 6.

6. If no problems have been found in the previous steps, the problem may be intermittent. The following items may help isolate the problem:

a. With the start signal disconnected from the starter (as in Step 2), run the chiller through the normal start sequence. Confirm that pilot relay 2K5 pulls in momentarily and then drops out. Non-latching diagnostic **b E2** should be displayed.

b. Perform the starter "dry run" procedure as described in the "Initial Start-Up Procedure" section of the appropriate service guide. Confirm that all contactors are reacting in the proper sequence. Check the resistance through the main contactors to confirm their proper operation. Repeat the sequence several times.

b EA, Eb
High Bearing Temperature (Optional Sensors # 1, # 2)

The occurrence of latching diagnostic **b EA** or **b Eb** indicates that one of the optional bearing temperature sensors registered a leaving oil temperature (from the motor bearings) exceeding the 180 F trip point.
If the UCP detects a high bearing temperature:

1. Check bearing temperature sensors 4RT8 and 4RT9 for proper operation using the checkout instructions in Figure 17 on page 67.

Note: Determine which bearing (i.e., inboard or outboard) is running hot by noting which sensor tripped. See Table 20 on page 58. Shorting 4RT8 or 4RT9 at the sensor should result in a sensor failure diagnostic (i.e., b AF or b b0). Be sure to allow enough time for the sensor slew rate to "catch up" (i.e., 5 minutes, maximum).

2. Check the oil sump temperature. Normal sump temperature ranges are 140 to 145 F when the unit is off, and 115 to 150 F while the chiller is running.

If the oil sump temperature reading is above the normal range:

a. Check the oil cooler for proper operation (CVHE 036 thru 125 only).
b. Verify that the oil heater control is functioning correctly. (See "b F4: High Oil Temperature".)

Other possible causes of a high bearing leaving oil temperature include: (1) an insufficient flow of oil to the bearings, and (2) a progressive bearing failure. Refer to the diagnostic chart in Figure 22 on the next page.

Figure 22 - Diagnostics "b EA" & "b Eb" High Bearing Temperature (Optional)

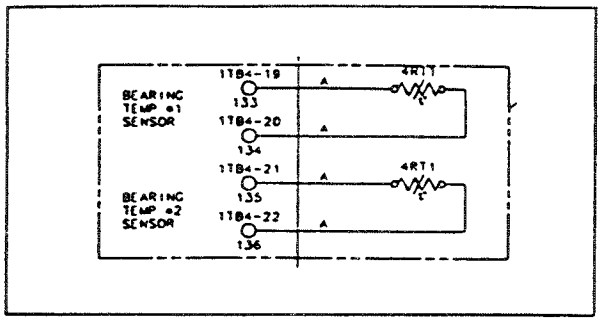

DIAGNOSTIC b EA OR b Eb DISPLAYED

RESET DIAGNOSTIC

IS DIAGNOSTIC b AF OR b bO DISPLAYED? — YES → REFER TO FIGURE 17, PAGE 67.

NO

MEASURE DC VOLTAGE AT TERMINALS 1TB4-19, -20, -21, -22

IS VOLTAGE > 2.159 VDC? — YES → MEASURE RESISTANCE AT TERMINALS 1TB4-19, -20, -21, -22 → DOES RESISTANCE CORRESPOND TO VALUES IN TABLE 20, PAGE 58? — YES → CHECK OUT OIL SUPPLY SYSTEM

NO

NO

PERFORM "POWER SUPPLY CHECKOUT " ON PG. 105

IS POWER SUPPLY OK? — YES → REPLACE MICRO MODULE 1U3

NO

REPLACE BAD POWER SUPPLY COMPONENT

b EC
Running Overload

Latching diagnostic **b EC** is generated by the UCM when the average 3-phase current drawn by the compressor motor exceeds 107% of the RLA. The "time-to-trip" interval graduates from 20 seconds at 107% RLA to 1 second at 140% RLA

Chiller control near the compressor RLA is comprised of a 5-step "corrective action" control sequence designed to minimize the likelihood of overload lockouts caused by normal operating fluctuations in amperage. The 5 steps in this corrective action sequence are: (1) vane opening limited; (2) vane opening prevented; (3) modulated vane closure; (4) "hard" vane closure; and, (5) chiller shutdown on latching diagnostic **b EC**. A motor overload may result from a vane control failure or a motor/bearing failure, though these are not the only possible causes of an overload condition.

b Ed
Chilled Water Flow

Code **b Ed** represents a nonlatching diagnostic condition caused when the chilled water flow interlock circuit opens. A built-in time delay of 2 seconds (i.e., maximum without flow) is designed to eliminate nuisance tripouts caused by a fluttering flow switch.

Because this diagnostic is nonlatching, the chiller automatically attempts to restart when the interlock circuit closes. The **b Ed** code is then stored in the "Last Diagnostic Code" register of the display menu. Manual (i.e., from a remote source) start-up of the chilled water pump(s) is required.

Use the steps outlined below to determine why the chilled water flow diagnostic occurred (Also, refer to the diagnostic chart in Figure 23 on the next page):

1. Verify that the chilled water pump is turned on.

a. If the pump is not running, check for blown fuses, open disconnect switches, etc.
b. If the pump is running, check for closed valves and plugged strainers. Also, ensure that pump capacity is sufficient to handle all of the chillers piped into the chilled water circuit.

2. Check the status of chilled water flow switch 5S2; if it is open, see Step 1b. In addition, be sure that the proper pressure drop is provided to the unit. If the flow rate is correct, flow switch 5S2 may be defective.

3. Check the status of the chilled water pump contactor auxiliary (5K1); it should be closed whenever the pump is running.

4. Verify that chilled water pump relay 1K16, is energized and that its contacts are closed. Relay 1K16's contacts are connected between terminals 1TB3-20 and 1TB3-21 on micro module 1U3.

5. Determine whether micro module 1U3 is functioning correctly. To do this, install a jumper between terminals 1TB3-20 and 1TB3-21, and set the chiller switch at one of the AUTO positions.

If the **b Ed** diagnostic code is cleared from this display, 1U3 is operating properly. However, if **b Ed** remains on the display, micro module 1U3 is defective and must be replaced.

Caution: To ensure proper chiller protection, never start the unit when the chilled water flow interlock circuit is jumpered! If jumper installation clears the diagnostic, remove the jumper immediately. If the diagnostic does not clear within three (3) minutes, remove the jumper and replace 1U3.

Figure 23 - Diagnostic "b Ed" Chilled Water Flow

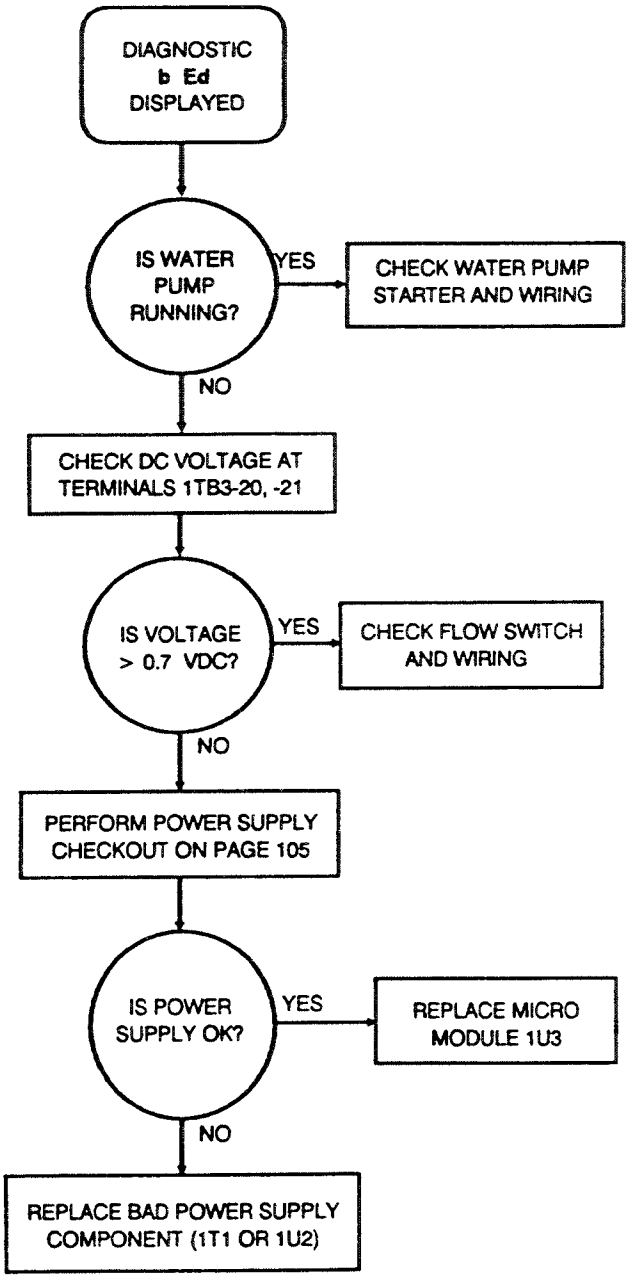

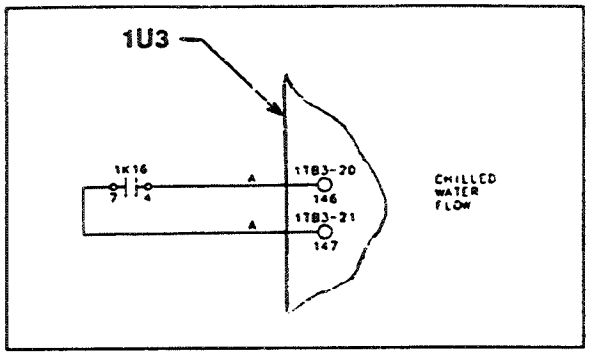

Electrical Schematic - Water Pump Interlock Circuit

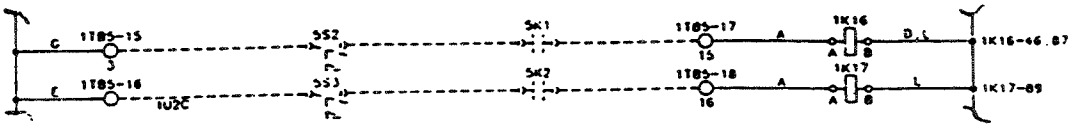

b EE
Exceeded Maximum Acceleration Time

This latching diagnostic occurs when motor amperage draw does **not** drop to 85% of the compressor RLA within the acceleration time limit. Long acceleration times result from a greater-than-normal load on the compressor during the start sequence. Possible causes for this increased load include--but are not limited to--these:

[ ] Maximum acceleration time setpoint is incorrectly set.
Check the positions of switches 1 through 5 on DIP switch block S3; see "b A5: Maximum Acceleration Time Range".
[ ] Inlet guide vanes are not fully closed.
This may be the result of an improperly adjusted actuator, broken linkage, sheared linkage pins, or inlet vane damage.
[ ] Warm evaporator and a cool condenser.
This condition creates a high differential pressure across the compressor, and forces a greater-than-normal flow of refrigerant gas through it.
[ ] Transition relay K5 (i.e., on power supply output module 1U2) fails to close.

If the compressor motor amperage draw drops below 85% of the RLA during the start sequence but the motor fails to transition, follow the transition relay checkout instructions in on page 96

b F0
Transition

Latching diagnostic **b FO** occurs when the starter fails to complete transition. Micro module 1U3 monitors the status of a normally-open set of auxiliary contacts on the "run".contactor (2K2). (Relay 2K2 is located in the starter panel.) If these contacts do not close within 2 seconds after the transition signal is sent to the starter, the UCM shuts down unit operation on the **b FO** diagnostic. The auxiliary on contactor 2K2 is tied to terminals 2TB1-10 and 2TB1-11 in the starter panel and-- from there--to terminals 1TB4-5 and 1TB4-6 on micro module 1U3 in the unit control panel). Refer to the typical wiring schematics on pages 46 thru 49. Among the possible reasons for a failure to transition are these:

[ ] Faulty wiring or bad connections in the proof-of-transition circuit.

WARNING: To prevent injury or death due to electrical shock, disconnect main starter power supply before checking this circuit.

[ ] Defective "run" contactor auxiliary (2K2).
Check for closure of the 2K2 auxiliary contacts when the main contactor closes.
[ ] Defective compressor transition relay (K5; located on power supply output module 1U2 in the unit control panel).

Note: Micro module 1U3 will not generate a **b FO** diagnostic unless it sees the conditions necessary for transition and initiates the transition signal.

Monitor the status of the K5 relay contacts at terminals 1TB2-5 and 1TB2-6 on power supply output module 1U2. If the K5 contacts do not close, follow the transition relay troubleshooting instructions on page 96. If the K5 contacts do close, the problem lies either in the starter or in the wiring connections to the starter. Use the "Electrical Sequence of Operation" in the unit Operation/ Maintenance manual and the wiring diagrams provided with the starter as a guide for determining proper starter operation.

b F1
Running External Interlock (Optional) or HGBP High Discharge Temperature Switch (4S5)

Units w/o Hot Gas Bypass

The UCM generates latching diagnostic condition **b F1** when the field-supplied and -installed run spare fault switch (5S4) closes during chiller operation. This switch input becomes active 1 second after transition, but is ignored by micro module 1U3 before and during start-up.

In the event that a **b F1** diagnostic occurs, check the electrical connections made at terminals 1TB4-3 and 1TB4-4. Verify that these terminals are not jumpered, and that the device connected to them--if any--is functioning properly. Refer to the diagnostic chart in Figure 24 on the next page.

If the external circuit appears to be okay, remove the wires from 1TB4-3 and 1TB4-4 and operate the chiller. Disappearance of the **b F1** diagnostic indicates that the problem is somewhere in the external circuit, while its reoccurrence implies that micro module 1U3 is defective and must be replaced.

Units w/Hot Gas Bypass

A temperature-monitoring device is located on the compressor discharge line of units equipped with optional hot gas bypass. If the discharge temperature rises above 210 F, this device closes its contacts and causes the chiller to shut down on latching diagnostic **b F1**.

Check the operation and setpoint of high discharge temperature switch 4S5; if the switch is functioning properly, the hot gas bypass valve requires adjustment to correct the high discharge temperature condition.

If unit operation and the external circuit appear to be okay, remove the wires from 1TB4-3 and 1TB4-4 and operate the chiller. Disappearance of the **b F1** diagnostic indicates that the problem is somewhere in the external circuit, while its reoccurrence implies that micro module 1U3 is defective and must be replaced.

Caution: High discharge temperature switch 4S5 must be reconnected into the circuit after test is complete. Unit operation without 4S5 connected can result in serious machine damage.

Note: Refer to Figure 24. Run spare fault switch 5S4 is connected at the same terminals used for the hot gas bypass temperature switch (4S5). A unit cannot be factory-equipped with both of these optional switches, but may be modified in the field so that both 5S4 and 4S5 are wired in parallel to terminals 1TB4-3 and 1TB4-4.

b F2
Low Oil Pressure

Latching diagnostic **b F2** indicates that the UCM detected a problem with the oil pressure either at start-up or during the run mode.

Micro module 1U3 starts the oil pump during the chiller start-up routine by closing the K7 oil pump relay contacts on power supply output module 1U2. 1U3 then monitors the contacts of the differential oil pressure (1S2) for closure; as soon as they close, 1U3 starts a 15-second timer.

If the 1S2 contacts remain closed throughout this 15-second interval, a "start" signal is sent to the starter. However, if the contacts open during this period, the timer is reset to zero and the 1S2 contacts must close again to reactivate the timer. In the event that the 15-second timer is not satisfied within 48 seconds of the initial K7 contact closure, the start sequence is aborted on a **b F2** latching diagnostic.

Figure 24 - Diagnostic "b F1" Running External Interlock

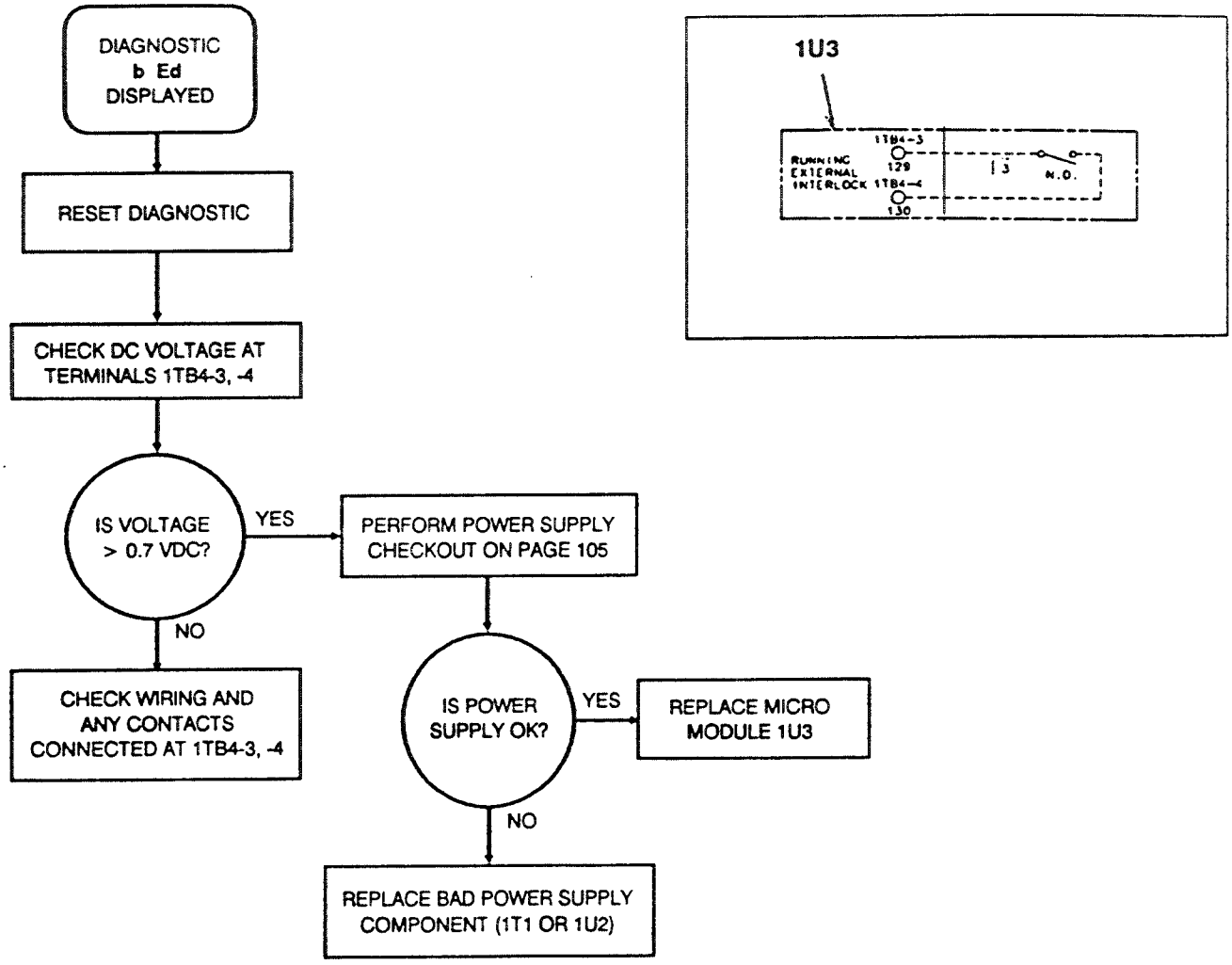

This diagnostic will also occur if the differential oil pressure switch (1S2) opens during any of the run modes of operation.

Note: Switch 1S2 should be adjusted to close on a differential pressure of 15 psid, and open when the pressure differential falls to 9 psid. Also, if 1S2 is wired properly, it is connected between terminals 1TB4-1 and 1TB4-2 on micro module 1U3 in the unit control panel.

To diagnose an occurrence of a **b F2** code, refer to Figure 25 and the following procedure. Determine whether or not the oil pump is operational. If the oil pump motor (4B5) will not run, it may be the result of--but not limited to--one of the malfunctions listed below. (If the oil pump does run but fails to build sufficient pressure, go to Item 3.)

1. Defective oil pump relay (K7).

Verify that oil pump relay K7 on power supply output module 1U2 is functioning correctly. To do this:

a. Remove the wires from terminals 1TB2-1 and 1TB2-2.

WARNING: To prevent injury or death due to electrical shock, open chiller disconnect before removing leads from terminals.

b. Check for continuity between these terminals while switching the oil pump switch (on the control panel front) between the ON and AUTO positions.

c. If the K7 contacts do not close when the oil pump switch is set at ON, check the voltage at pins 4 and 14 on ribbon connector 1P4. These voltage readings should be observed:

Oil Pump Switch "Off" = 0.0 VDC min. to 0.1 VDC max.
Oil Pump Switch "On" = 0.85 VDC min. to 1.6 VDC max.

If these voltages are not obtained, micro module 1U3 is defective and must be replaced.

If these voltages are observed and the (1U2)K7 relay still does not operate, power supply output module 1U2 is defective and must be replaced.

d. If the oil pump runs (and the oil pressure is satisfactory) when the oil pump switch is set at ON (manual mode) but does not operate during the start-up sequence, monitor the K7 relay as described in Step 1c to verify whether 1U3 is sending a "start" signal to the oil pump.

2. Oil pump motor-related problem. Check for:

[ ] a blown oil pump fuse (1F1) in the unit control panel;
[ ] faulty wiring and loose or broken connectors;
[ ] a blown oil pump capacitor (1C1);
[ ] a defective oil pump starter relay (1K8);
[ ] the resistance of the oil pump motor windings with the motor leads removed. Resistance readings obtained should be as follows:

2.2 ohms between terminals 1 and 2 (run);
4.8 ohms between terminals 1 and 3 (start); and,
7.0 ohms between terminals 2 and 3.

WARNING: To prevent injury or death due to electrical shock, open chiller disconnect switch before reversing motor leads.

Proceed to Items 3 through 7 if a check of the oil pump motor reveals that the oil pump runs but does not build sufficient pressure.

3. Low oil level.

Check the oil level in the sump using the 2 sight glasses provided in the oil sump head. Add oil as necessary to raise the level to better than half of the lower sight glass while the pump is running.

4. Oil sump temperature is out of range.

Check oil temperature at the sump; the temperature should be 140 to 145 F when the chiller is shut down, and 115 to 150 F while the unit is running.

5. Faulty or improperly adjusted oil pressure regulator.

With the unit off, adjust the oil pressure regulator to provide 20 to 22 psid. Then monitor the pressure change during the chiller start and run modes to verify that the reulator is working properly.

6. Defective differential oil pressure switch (1S2).

Figure 25 - Diagnostic "b F2" Low Oil Pressure

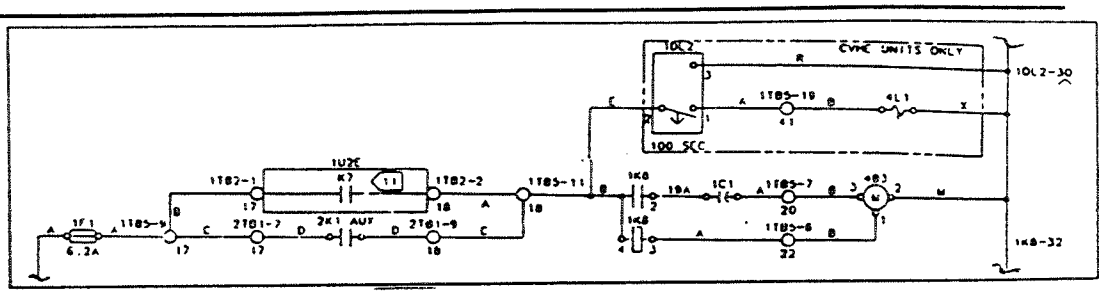

DIAGNOSTIC b F2 DISPLAYED

RESET DIAGNOSTIC

DOES OIL PRESSURE DROP < 9 PSI?

YES → MEASURE AC VOLTAGE AT TERMINALS 1TB5-8, -2

IS 115 VAC PRESENT?

YES → CHECK OIL PUMP AND LUBRICATION SYSTEM

NO → MEASURE AC VOLTAGE AT TERMINALS 1TB2-2 & 1TB5-2

IS 115 VAC PRESENT?

YES → CHECK WIRING FROM 1TB2-2 TO OIL PUMP MOTOR

NO → MEASURE AC VOLTAGE AT TERMINALS 1TB2-1 & 1TB5-2

IS 115 VAC PRESENT?

YES → CHECK WIRING AND FUSES 1F1 & 1F3

NO → MEASURE DC VOLTAGE AT PLUG 1P4-4, -14

IS VOLTAGE BETWEEN 0.85-1.6 VDC?

YES → REPLACE 1U2 MODULE

NO → MEASURE DC VOLTAGE AT TERMINALS 1TB4-1, -2

IS VOLTAGE > 0.7 VDC?

YES → CHECK DIFFERENTIAL PRESSURE SWITCH AND WIRING

NO → PERFORM POWER SUPPLY CHECKOUT ON PAGE 105

IS POWER SUPPLY OK?

YES → REPLACE MICRO MODULE 1U3

NO → REPLACE BAD POWER SUPPLY COMPONENT (1T1 OR 1U2)

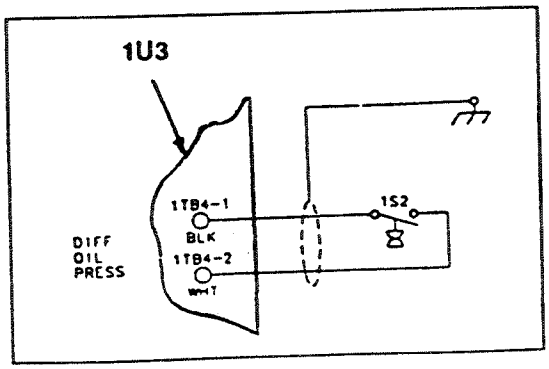

Monitor the status of switch 1S2's contacts while manually starting and stopping the oil pump with the oil pump switch. Check for a broken switch, bad contacts, and plugged pressure- sensing lines.

7. Defective oil pump.

a. Disconnect the high oil pressure gauge and connect a pressure gauge capable of registering 100 psi in its place.

b. Remove and cap bearing oil supply lines (i.e., the oil pump is "deadheaded" except for the relief bypass).

c. Start the oil pump and tighten down the oil pressure regulator adjusting screw completely to increase oil pressure.

d. Check the pressure gauge installed in Step 7a; the oil pressure should exceed 60 psi.

If the oil pressure does not exceed 50 psi--and the regulator is blocking all bypass flow, the oil pump is faulty and must be replaced.

Note: The oil pump is a positive-displacement-type device designed to pump at a rate of 2 to 3 gallons per minute. Since "deadheading" will cause the motor amp draw to rise, run the pump only long enough to complete the test.

b F3
Low Oil Temperature

(This diagnostic provided on CVHE units, "1C" and later design sequences only ; CVHB units, "1D" and later design sequences only; and all CVHF units with UCP695.)

An occurence of this of this non-latching diagnostic indicates that the oil temperature sensor 4RT7 is sensing a temperature less than 100 F. Micro module 1U3 will not allow a chiller start with an existing oil temperature that is lower than 100 F. When oil temperature rises above 100 F, the UCP will initiate a start sequence. In the even that a **b F3** diagnostic occurs, the following steps may be necessary:

1. Wait for oil temperature to rise above 100 F. If temperature does not increase in a reasonable amount of time, check for proper oil heater and control operation as follows (refer to appropriate wiring schematics for the chiller).

a. Check Fuse 1F2.

b. Check condition of oil heater. Check for voltage to the heatrer, burned out heater, loose connections or machanical problem.

c. Determine acutal oil temperature using oil temperature sensor 4RT7, located in the bulbwell at the rear of the oil sump. Read voltages on terminals 1TB3-13, -14 on micro module 1U3. Convert this voltage DC to temperature, using Table 20 on page 58. If the actual temperature does not agree with the measured resistance of if the measured resistance does not agree with the thermistor voltage, perform the power supply checkout procedure on page 105. If the power supply is functioning properly, replace the oil temperature sensor.

d. Check for proper operation of 1U2-K6, and the 1K9 relay. Some UCP micro panels do not use a 1K9 relay.

e. Confirm that the micro issending a signal to the oil heater relay K6. Measure the DC voltage on Pins 2, -14 of ribbon connector 1P4. If oil temperature is less than 100 F, this voltage should be 0.85-1.6 VDC.

b F4
High Oil Temperature

Occurrence of this latching diagnostic indicates that oil temperature thermistor 4RT7 sensed a temperature exceeding 180 F during chiller operation. This sensor is located in a bulbwell at the rear of the oil sump, and its leads are connected to terminals 1TB4-13 and 1TB4-14 on micro module 1U3.

In the event that a "high oil temperature" (**b F4**) diagnostic occurs, refer to Figure 26 on the next page and:

1. Check the oil temperature at the sump to determine if it is normal. Use the checkout instructions in Figure 13 on page 57 to verify that 4RT7 is functioning correctly.

2. If the oil temperature measured in Step 1 is excessive, check the oil heater for proper operation.

a. Oil heater relay K6 (i.e., on power supply output module 1U2) should energize when sump temperature is less than 140 F, and de-energize when it exceeds 145 F.

Note: Oil heater operation is governed by the temperature the UCM "sees" at sensor 4RT7. The temperature observed on the gauge located on the oil sump may not match the temperature measured by 4RT7. When troubleshooting the oil heater circuit, always read the voltage at terminals 1TB4-13 and 1TB4-14 and convert this voltage to a temperature (Table 20 on page 58).

b. If the sump temperature is greater than 145 F and oil heater relay (1U2)K6 is closed, determine: (1) if micro module 1U3 is calling for the contact closure, and (2) whether power supply output module 1U2 is defective.

To do this:

(1) Measure the DC voltage signal at pins 2 and 14 of ribbon connector 1P4. The following voltage readings should be observed:

Relay (1U2)K6's contacts open = 0.0 VDC min. to 0.1 VDC max.
Relay (1U2)K6's contacts closed = 0.85 VDC min. to 1.6 VDC max.

(2) If the status of the K6 relay contacts does not match the voltage signals shown above, power supply output module 1U2 is defective and must be replaced.

If 1U3 is sending a "closed" signal to K6 (i.e., a voltage signal of 0.85 to 1.6 VDC) and sensor 4RT7 is functioning properly--and is reading a temperature above 145 F, then micro module 1U3 is defective and must be replaced.

Note: To "force" micro module control of oil heater relay K6, substitute fixed resistances for oil temperature sensor 4RT7. For example:

Relay (1U2)K6 should open at 2,000 ohms = 151.5 F;
Relay (1U2)K6 should close at 3,000 ohms = 131.5 F.

Be sure to allow sufficient time for micro module 1U3 to respond (i.e., 5 minutes).

Caution: To prevent possible equipment damage, remove fixed resistances and reconnect sensor 4RT7 as soon as the tests are complete.

3. Check for machine operating conditions that could result in an increased oil temperature. (See "b EA, Eb: High Bearing Temperature" for possible causes.)

Figure 26 - Diagnostic "b F4" High Oil Temperature

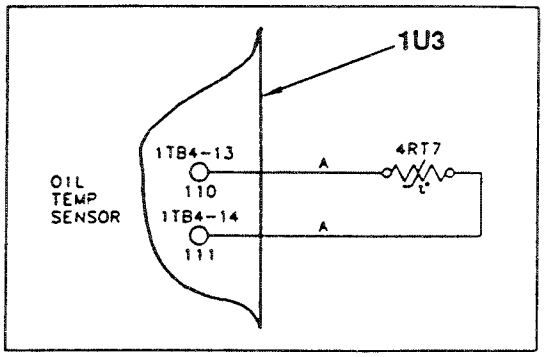

DIAGNOSTIC b F2 DISPLAYED

RESET DIAGNOSTIC

MEASURE DC VOLTAGE AT TERMINALS 1TB4-13, -14

IS VOLTAGE < 2.16 VDC?

YES

MEASURE RESISTANCE AT TERMINALS 1TB4-13, -14

NO

DOES READING CORRESPOND TO VOLTAGE IN TABLE 20 (PG. 58)?

YES

DOES READING CORRESPOND TO TEMPERATURE IN TABLE 20 (PG. 58)?

YES

MEASURE AC VOLTAGE AT TERMINALS 1TB5-14, -2

NO

NO

REPLACE OIL TEMPERATURE SENSOR 4RT7

IS 115 VAC PRESENT?

YES

MEASURE AC VOLTAGE AT TERMINALS 1TB2-4, 1TB5-2

NO

CHECK OIL PUMP & LUBRICATION SYSTEM

IS 115 VAC PRESENT?

YES

NO

REPLACE 1K9 RELAY

PERFORM POWER SUPPLY CHECKOUT ON PAGE 105

MEASURE DC VOLTAGE AT PLUG 1P4, PINS 2, -14

IS POWER SUPPLY OK?

YES

REPLACE MICRO MODULE 1U3

NO

IS VOLTAGE BETWEEN 0.85-1.6 VDC?

YES

NO

REPLACE BAD POWER SUPPLY COMPONENT (1T1 OR 1U2)

REPLACE 1U2 MODULE

b F5
High Condenser Pressure

This diagnostic indicates that the condenser high pressure switch (1S1) has closed its N.O. contacts, indicating excessive condenser pressure. 1S1 is located in the control panel and is connected to output module 1U2 via the 1J2 connector cable. Note that all 3 leads from 1S1 (common, N.O. and N.C.) must be connected to 1U2 for proper operation.

1. Check for operating conditions that would drive the condensing pressure upward. These include — but are not limited to:

[ ] air or noncondensibles in the machine (check the purge);
[ ] low condenser water flow;
[ ] condenser water temperature too high;
[ ] fouled condenser tubes.

If no operational problems can be found, the pressure switch should be checked for proper operation.

a. Check all wiring connections for accuracy and tightness. See the appropriate wiring diagram.
b. Connect the pressure switch to a source of compressed air or nitrogen through a pressure regulator. Slowly increase the pressure from 0 psi to the trip pressure (15 ± 1 psi standard; 25 ± 1 psi ASME). If the switch does not operate at the trip pressure, recalibrate or replace it.

b F7
Condenser Water Flow

This diagnostic indicates that the condenser water flow interlock circuit opened during chiller operation.

Note: This diagnostic is nonlatching; therefore, chiller restart will be attempted. If condenser water is still not available upon restart, the chiller will shut down on the latching diagnostic **b dC** (condenser water flow overdue).

Start-up of the condenser water pump is normally done by the chiller during the start-up sequence.

Possible causes of a **b F7** diagnostic include:

[ ] closed condenser water valves;
[ ] low condenser water flow;
[ ] plugged condenser water system filters;
[ ] faulty condenser water pump relay (K6);
[ ] faulty condenser water pump contactor (5K2);
[ ] faulty condenser water pump contactor auxiliary (5K2);
[ ] faulty condenser water pump relay (1K17);
[ ] faulty condenser water flow switch (5S3).

To troubleshoot an occurrence of a **b F7** diagnostic, refer to the procedure in Figure 27 on the next page.

Figure 27 - Diagnostic "b F7" Condenser Water Flow

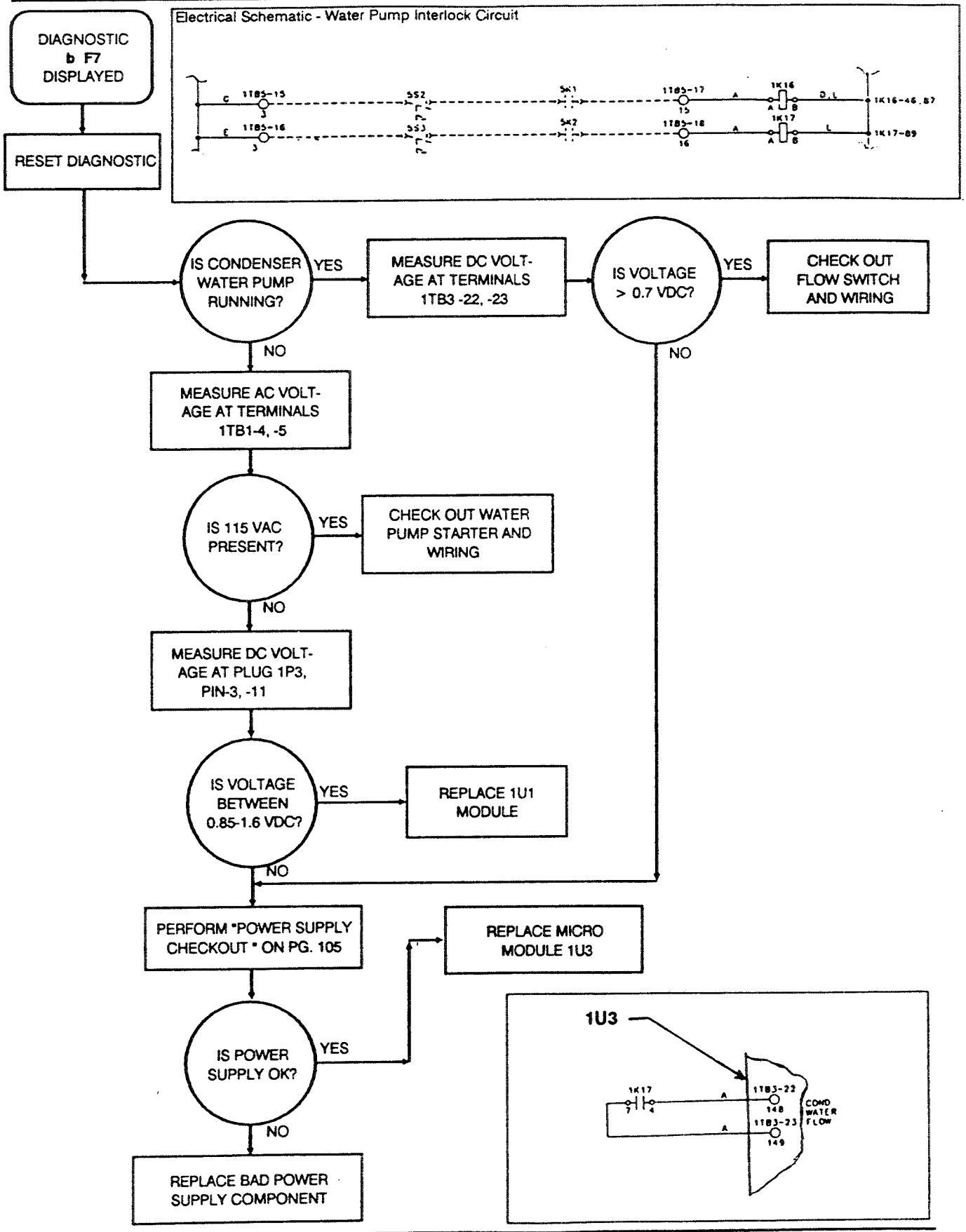

b F8
Improper Unit Identification

This diagnostic indicates that the micro was configured for a different type of chiller than it is installed on. Check the unit I.D. switches on DIP switch S9 for proper position. See "Factory DIP Switch Settings" starting on page 22.

If the switches are set in the correct positions and the diagnostic will not clear, try moving the switches up and down several times. This may clear any oxidation that may have formed on the switches.

If the diagnostic still does not clear, replace micro module 1U3.

b F9
Free Cooling Valves

This diagnostic occurs when the free cooling valves do not close prior to a powered cooling start. Free cooling valves 4B12 and 4B13 have full-closed end switches wired in series and connected to Terminals 1TB3-18 and 1TB3-19 of the 1U3 module. Prior to a powered cooling start, the FC valves are given a "close" signal via the normally-closed contacts of relay 1U1K1. If the valve end switches do not close within the preset 3-minute time period, the **b F9** diagnostic will result.

Possible causes of a **b F9** diagnostic include:

[ ] end switches are not properly adjusted;
[ ] free cooling valves(s) jammed;
[ ] signal to close valves not being sent either because:

- 1U1K1 relay malfunction
- 1U3 not calling for 1U1K1

Troubleshooting the **b F9** diagnostic:

1. Set chiller switch at STANDBY/RESET and free cooling switch at OFF.

2. Check the free cooling valve end switch circuit.

Remove wires 118 and 119 from Terminals 1TB3-18, -19. Check for continuity through the end switch circuit.

a. If continuity exists, then the valves have closed, but the 1U3 module does not recognize the closure. Replace the 1U3 micro module.

Note: Whenever 1U3 replacement is indicated, always perform the power supply checkout procedure.

b. If there is no continuity, go to Step 3.

3. Check for power at Terminal 1TB1-17.

a. If there is no power, check Fuse 1F3 and the power supply wiring.

b. If there is power, go to Step 4.

Figure 28 - Diagnostic "b F9"
Free Cooling Valves

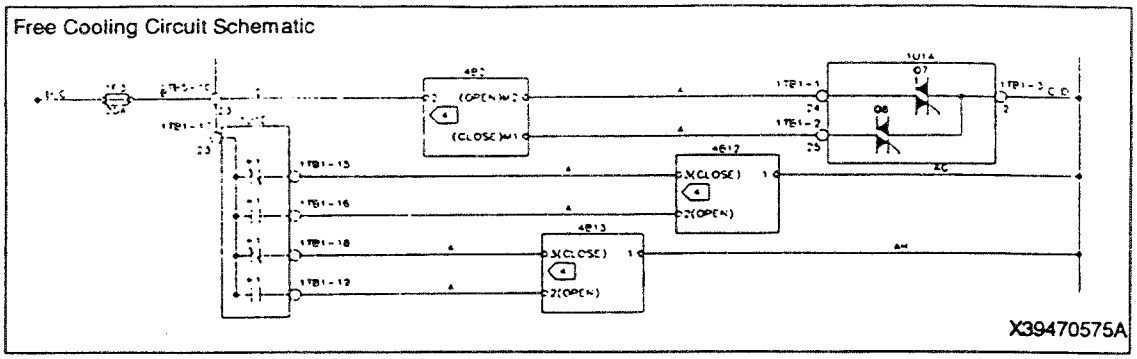

DIAGNOSTIC b F9 DISPLAYED

RESET DIAGNOSTIC

CHECK DC VOLTAGE AT TERMINALS 1TB3-18, -19

IS VOLTAGE > 0.7 VDC?

YES

MEASURE AC VOLTAGE AT 1TB1-15, 1TB5-2 AND AT 1TB1-18, 1TB5-2

IS 115 VAC PRESENT AT THESE TERMINALS?

YES

CHECK FC VALVES, END SWITCHES AND WIRING

NO

CHECK AC VOLTAGE AT TERMINALS 1TB1-17 & 1TB5-2

IS 115 VAC PRESENT AT THESE TERMINALS?

YES

CHECK DC VOLTAGE AT PLUG 1P1-9, -10

NO

CHECK WIRING AND FUSE 1F3

IS VOLTAGE BETWEEN 0.85-1.6 VDC?

YES

REPLACE 1U1 MODULE

NO

NO

PERFORM POWER SUPPLY CHECKOUT ON PAGE 105

IS POWER SUPPLY OK?

YES

REPLACE MICRO MODULE 1U3

NO

REPLACE BAD POWER SUPPLY COMPONENT (1T1 OR 1U2)

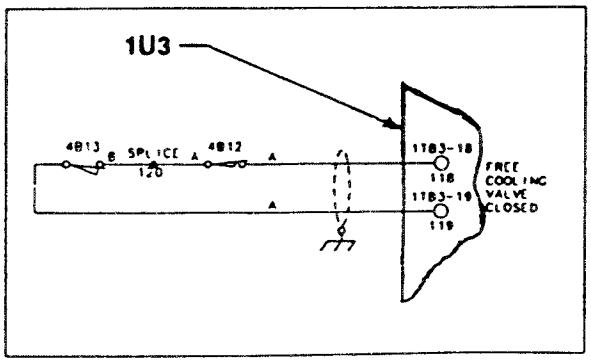

4. Check for power at both terminals, then check the free cooling valves for faulty end switches for incomplete operation.

a. If there is power at both terminals, then check the free cooling valves for faulty end switches or incomplete operation.

b. If there is no power at either or both terminals, go to Step 5.

5. Check for a voltage signal at ribbon cable 1P3, Pin 9 (with respect to Pin 11).

a. If voltage is less than 0.1 VDC, then relay output module 1U1 is bad; replace it.

Note: Whenever 1U1 replacement is indicated, always perform the power supply checkout procedure first!

b. If voltage is greater than 0.5 VDC and:

— the chiller switch is in the STANDBY/RESET or AUTO/LOCAL position, and
— the free cooling switch is set at the OFF position;

then, micro module 1U3 is bad and must be replaced.

Note: Whenever 1U3 replacement is indicated, always perform the power supply checkout procedure first!

Free Cooling Circuit Schematic

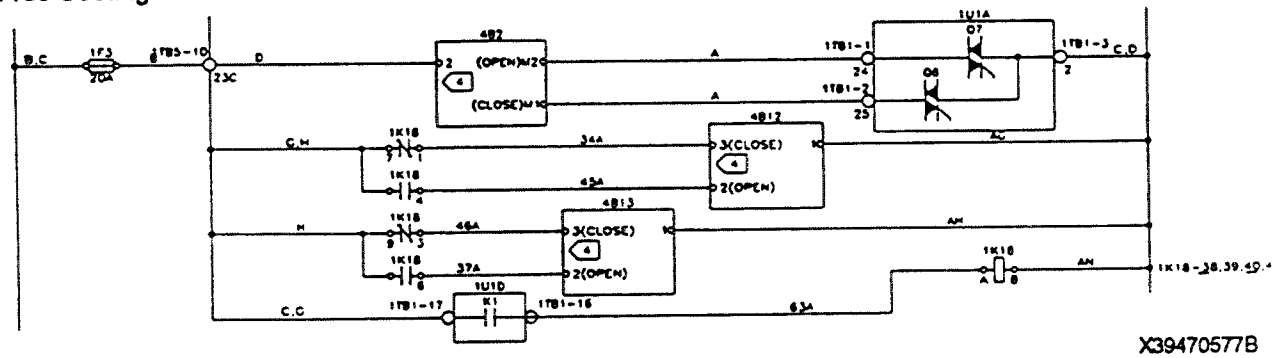

IMPORTANT: After April 1992 the 1K1 relay in the 1U1 module is no longer used to actuate the free cooling valve. The 1K1 relay is now used to close a heavier relay 1K18 as shown above in X39470577B.

b FA
Actuator

Diagnostic **b FA** occurs when the vane actuator (4B2) fails to close during the (powered or free cooling) start sequence.

The start sequence for the unit incudes an "establish condenser flow/close vanes" operating mode (**A 71**). During the **A 71** operating mode, the micro module 1U3 sends a "vanes close" signal to the vane actuator and monitors an end switch on 4B2. If the end switch does not close within the preset 4-minute window, latching diagnostic **b FA** results.

To diagnose an occurrence of this diagnostic, refer to "Vane Control Checkout Procedure" on page 111.

Note: If the **b FA** diagnostic is intermittent, the problem will likely be the vane actuator end switch.

Figure 29 - Diagnostic "b Fb"
Low Evaporator Refrigerant Temperature

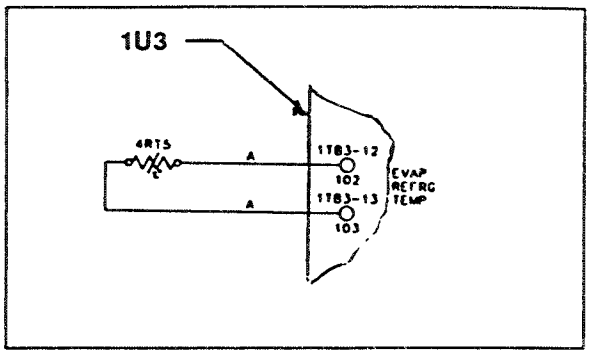

DIAGNOSTIC **b Ad** DISPLAYED

RESET DIAGNOSTIC

DOES **b Fb** REAPPEAR ON DISPLAY?

YES → REFER TO FIGURE 15, PAGE 63

NO

CHECK DC VOLTAGE AT TERMINALS 1TB3-12, -13

IS VOLTAGE > THAN REFRIG. TRIP SETPOINT?

YES → CHECK SENSOR RESISTANCE AT TERMINALS 1TB3-12, -13

DOES READING CORRESPOND TO TEMPERATURE GIVEN IN TABLE 23, PG.64?

YES → REFER TO APPROPRIATE SECTION OF CTV-SG-2

NO → REPLACE 1U1 MODULE

NO

PERFORM POWER SUPPLY CHECKOUT ON PAGE 105

IS POWER SUPPLY OK?

YES → REPLACE MICRO MODULE 1U3

NO

REPLACE BAD POWER SUPPLY COMPONENT (1T1 OR 1U2)

b Fb
Low Evaporator Refrigerant Temperature

Evaporator refrigerant temperature is continuously monitored and compared to the trip point during chiller operation. If the trip point is violated for a period of 30 F-seconds, the chiller will shut down on latching diagnostic **b Fb**. To diagnose an occurrence of a **b Fb** diagnostic, refer to Figure 29 .

Probable causes for a **b Fb** diagnostic include:

[ ] chilled water setpoint too low;
[ ] sensor failure;
[ ] unit low on refrigerant;
[ ] refrigerant stacked in condenser;
[ ] evaporator tubes fouled.

b Fd
External Interlock (Optional)

The UCP (1U3) generates latching diagnostic condition **b Fd** any time the circuit between Terminals 1TB3-16, -17 opens while the control panel is powered. The unit is shipped with a jumper between 1TB3-16, and -17; however, the jumper may have been removed and replaced with a field-supplied interlock circuit.

In the event that a **b Fd** diagnostic occurs, check the electrical connections to Terminals 1TB3-16, -17. If the jumper is installed, verify that the terminals connections are tight. If the diagnostic cannot be reset (cleared) with the input jumpered, micro module 1U3 is bad and must be replaced.

If Terminals 1TB3-16 and -17 are wired to an external circuit, find the remote device that opened the circuit and reset it. Verify that there is continuity through the circuit by removing the wires from 1TB3-16 and -17 and checking for continuity. If the diagnostic cannot be reset after the remote device is reset, remove the external circuit and connect a jumper wire to 1TB3-16 and -17. If the diagnostic still cannot be reset, the problem is with the 1U3 model; replace it. If the diagnostic can be reset, check the contact fo the remote device.

Note: The external interlock circuit is monitored with a low-voltage signal. Contacts in the external circuit must be compatible with a dry circuit, 12 VDC, 45 mA. Gold-plated contact are recommended.

b FF
Unit Controller

The UCP (1U3) runs a continuous self-diagnostic routine that monitors the functions and communications within the micro module (1U3). Latching diagnostic **b FF** is displayed when the self-test routine locates a problem.

The **b FF** diagnostic can also be seen when a noise spike enters the system and disrupts the controller.

Reset (clear) the diagnostic by toggling the chiller switch to STANDBY/RESET and back to one of the AUTO positions. If the diagnostic cannot be reset, power down the control panel for 2 minutes and power it back up with the chiller switch in the STANDBY/RESET position. If the **b FF** diagnostic returns immediately, replace micro module 1U3.

Note: If this condition occurs at initial unit start-up, carefully check all inputs to the low-voltage terminal strips (1TB3, 1TB4, 1TB6) for misconnections and noise interference.

If the **b FF** diagnostic can be reset but recurs frequently, check the low-voltage wiring for proper isolation from noise sources.

Compressor Transition Relay 1U2K5 and Current Transformer Checkout Procedures

(UCP695 Control Panels Only)

Note: The following compressor transition relay and current transformer checkout procedures are only applicable for those CVHE units equipped with UCP695 control panels (i.e., chillers of "K" or later design sequence). Check the tenth digit of the model number stamped on the chiller nameplate to determine its design sequence.

To effectively use the compressor transition relay (1U2K5) and current transformer (2T1, 2T2, 2T3, 2T5, 2T6 and 2T7) checkout procedures described in this section, it is important to first understand the normal operation of the control panel during the start sequence. Review the start sequence outlined below (along with the typical electrical schematic in Figure 9 on pages 46-49) or using the electrical diagrams that shipped with the chiller, before attempting to check the integrity of 1U2K5.

1. Micro module 1U3 initiates a "start" signal.

Once all of the prestart criteria are satisfied (i.e., condenser and chilled water flows proven, oil pressure established, etc.), micro module 1U3 initiates a "start" signal by "telling" the K1, K2, K3 and K4 relay contacts in power supply output module 1U2 to close. See Line 16 of the electrical schematic.

Proper response of all 4 sets of contacts allows control voltage to flow from Terminal 1TB2-9 to 1TB2-7; from there, current passes through Terminal 1TB5-5 (and 2TB1-4) and energizes the coil of pilot relay 2K5 in the starter panel.

2. "Star" windings of chiller compressor motor 4B1 energize.

Once energized, pilot relay 2K5 begins the compressor motor start process by energizing the coil of shorting contactor 2K3; this, in turn, energizes start contactor 2K1. (See Lines 19 and 21 of the schematic). Closure of 2K1's normally-open contacts allows line voltage to flow through the "star" windings of the compressor motor (4B1). Lines 1, 5 and 9.

3. Micro module 1U3 initiates transition.

Milliamp signal inputs at Terminals 1TB4-7 through -12 allow micro module 1U3 to monitor compressor motor amperage draw via 3 pairs of current transformers. (Refer to Lines 1 through 12 of the schematic.)

Keep in mind that 1U3's control logic prevents it from initiating transition unless these 2 conditions are met:

a. first, motor amp draw must exceed 100% of the rated load amps (RLA); and,

b. motor amp draw must then fall below 85% of the RLA.

If both of these requirements are satisfied, 1U3 initiates transition by energizing the compressor transition relay (1U2K5) in the power supply output module (Line 20).

Note: 1U2K5 is energized when the voltage signal at Pin 1 (with respect to Pin 14) on ribbon connector 1P4 is 0.85 to 1.6 VDC.

4. Transition occurs successfully, and compressor motor 4B1 is operating in the normal run configuration.

Closure of the K5 compressor transition relay contacts in 1U2 allows current to reach the coil of the starter panel's transition contactor (2K4). As 2K4 energizes, its normally-closed auxiliary contacts (Line 19) open to de-energize shorting contactor 2K3.

Run contactor 2K2 energizes when 2K3's normally-closed auxiliary contacts (Line 22) reclose. (Notice that the 2K4 transition contactor de-energizes as soon as the normally-open 2K2 auxiliary contacts in the transition circuit--Lines 19 and 20--close.)

When line voltage flows across the now-closed 2K2 contacts to the "delta" windings of 4B1 (Lines 4, 8 and 12), the compressor motor is in its normal "run" configuration.

5. Micro module 1U3 confirms that transition was successfully completed.

Refer to Line 69 of the schematic; notice that a normally-open set of auxiliary contacts on run contactor 2K2 is located in a "proof- of-transition" circuit connected to micro module input Terminals 1TB4-5 and -6.

Closure of these auxiliary 2K2 contacts "tells" micro module 1U3 that transition occurred successfully.

If these contacts do not close within 2 seconds after the transition signal is sent to the starter (see Step 3), micro module 1U3 assumes that the compressor motor failed to transition, and shuts down unit operation on latching diagnostic **b FO**.

Any one (or all!) of the malfunctions listed below can cause micro module 1U3 to abort a start-up attempt with the "transition failure" (**b F0**)--or "exceeded max. accel. time" (**b EE**)-- diagnostic.

[ ] Faulty current-sensing inputs (1TB4-7 thru -12).

Recall that in Step 3 of the preceding start sequence, 1U3 monitors the milliamp signals it receives at input Terminals 1TB4-7 through -12 to determine whether or not compressor motor amp draw exceeds 100%--then falls below 85%--of RLA. Control logic prevents 1U3 from initiating the transition signal unless these prerequisites are met.

Faulty current-sensing inputs may prevent 1U3 from "seeing" this change in amp draw (i.e., causing it to shut down unit operation on either a **b EE** diagnostic, or a **b E2** diagnostic if all 3 inputs are bad).

[ ] Defective micro module (1U3).

Latching diagnostic **b EE** can also occur if micro module 1U3 receives the appropriate current-sensing inputs at Terminals 1TB4-7 through -12, but-- because of an internal malfunction-- either: (1) fails to issue a "close" signal to the normally-open 1U2K5 contacts; or (2) continuously sends this "close" signal.

Review Step 3 of the start sequence again. Notice that the existence of a 0.85 to 1.6 VDC voltage signal at Pin 1P4-1--with respect to Pin 1P4-14--confirms that 1U3 did tell the 1U2K5 contacts to close.)

[ ] Defective power supply output module (1U2).

Even though motor amp draw requirements are satisfied and 1U3 successfully transmits a "transition" signal to the power supply output module (1U2), transition will not occur if 1U2 is defective and fails to close its K5 compressor transition relay contacts.

[ ] Faulty starter component(s) or wiring.

Refer again to Step 4 of the start sequence. Notice that closure of the 1U2K5 contacts should provide current to transition contactor 2K4 (and, ultimately, run contactor 2K2) in the starter panel. If the electrical connections between 1U2 and the starter panel are faulty--or if either 2K4, 2K3 or 2K2 is defective--transition will not occur, and 1U3 will generate a **b F0** or **b EE** diagnostic.

[ ] Faulty "proof-of-transition" circuit.

Keep in mind that the existence of a **b F0** diagnostic may not necessarily mean that the starter failed to transition. It is equally possible that transition was completed successfully, but micro module 1U3 is not receiving "proof of transition" at input Terminals 1TB4-5 and -6. (Lines 69 and 70.) In this situation, either the auxiliary 2K2 contacts are malfunctioning, the "transition complete" electrical circuit is faulty, or 1U3 is defective.

Whenever a **b F0** or **b EE** chiller diagnostic condition exists, use the following checkout procedure to isolate the source of the transition-related failure.

1U2K5 Checkout Procedure

Note: The steps in this procedure were purposely arranged for ease of completion, and do not reflect the sequence of events previously described for a normal, attempted start-up.

WARNING: Use extreme care when performing this checkout procedure while the chiller is energized. Carelessness can result in injury or death.

1. Check the input voltage at ribbon connector Pin 1P4-1 (red VOM lead) with respect to Pin 1P4-14 (black VOM lead) while the unit is not running.

If the voltage measured is 0.85 to 1.6 VDC, module 1U3 is defective and must be replaced.

If the voltage reading is 0.0 to 0.1 VDC, use an ohmmeter to check for continuity between Terminals 1TB2-5 and -6. If the resistance reading obtained indicates that the K5 contacts between these terminals are closed, power supply output module 1U2 is defective and must be replaced.

2. Connect a voltmeter—adjusted to read 115 VAC—to Terminals 1TB2-6 and 1TB5-2; then initiate the chiller start sequence. The voltmeter should initially register 0 VAC until the 1U2K5 contacts close during the start sequence; at that point, the meter should register control voltage (approximately 115 VAC).

If the K5 compressor transition relay contacts do close, and:

a. the 2K4 starter transition contacts pull in but drop out again within 2 seconds (causing 1U3 to trip on **b F0**), then go to Step 3.

b. the starter does not transition at all (causing 1U3 to trip on **b EE**), then the problem lies either in the starter itself, or the wiring connections to the starter. (In this situation, it is not necessary to complete Steps 3 through 9 of this checkout procedure.)

However, if the K5 contacts do not close, complete Steps 4 through 9 to isolate the malfunction at power supply output module 1U2, micro module 1U3, or the current transformers (i.e., 2T1, 2T2, 2T3, 2T5, 2T6 and 2T7).

3. Monitor the status of 1U3's "proof-of-transition" circuit during the chiller start sequence. To do this, connect the black lead of a digital VOM to 1U3 Terminal 1TB4-6 and the red lead to 1TB4-5; then initiate another start-up.

a. Check the voltage between Terminals 1TB4-5 and -6 before the oil pump starts to determine the status of the auxiliary 2K2 contacts (Line 69 of the schematic). Since these contacts should be open at this point in the start sequence, you should obtain a voltage reading of 6.9 to 16.8 VDC.

(If the auxiliary 2K2 contacts are already closed, micro module 1U3 should "lock out" on the **b F0** latching diagnostic for transition.)

b. Recheck the voltage between these terminals when motor amp draw falls below 85% of the RLA. (When this occurs, 1U3 should send a "close" signal to the K5 contacts; the auxiliary 2K2 contacts should then close within 2 seconds.)

Since the auxiliary 2K2 contacts should now be closed, you should see a voltage reading of 0.0 to 0.1 VDC.

If you do obtain the voltage readings just described in (a) and (b) above--but the unit still "locks out" on the **b F0** diagnostic, micro module 1U3 is defective and must be replaced. Otherwise, the problem lies either in the starter or the wiring connections to the starter. (In either case, it is not necessary to complete Steps 4 through 9 of this checkout procedure.)

4. Set a digital VOM to register DC voltage; then connect the black (negative) VOM lead to Pin 1P4-14 and the red lead to Pin 1P4-1.

5. Repeat the chiller start sequence. Verify that compressor motor amp draw actually exceeds 100% of the compressor RLA, and check the VDC signal at Pin 1P4-1 when amp draw falls below 85% of RLA. (Instructions for calculating %RLA are provided in Note 1 of Table 25.)

If the signal measured at Pin 1P4-1 does not increase from 0.0-0.1 VDC to 0.85-1.6 VDC when the amp draw falls below 85% of RLA, go to to Step 6.

Note: If input voltage at Pin 1P4-1 does increase to 0.85-1.6 VDC when amp draw drops below 85% of RLA but the 1U2K5 contacts do not close, power supply output module 1U2 is not functioning properly. Before replacing 1U2, perform the power supply checkout procedure described in the next section of this bulletin. (An improper voltage supply to 1U2 can cause a good module to produce erratic output responses.)

6. Use the unit's design RLA value in conjunction with the data in Table 26 to verify that:

a. the line current transformers (CTs; 2T1, 2T2 and 2T3) are properly sized;

b. each line CT is provided with the correct number of "primary turns" (i.e., number of times that the main power line passes through its CT); and,

c. the DIP switches used to establish the unit's RLA setpoint (i.e., DIP switch block S1, switch nos. 1 through 8) are properly positioned. (A step-by-step, RLA-setpoint verification procedure is provided in the CVHE Service Guide (CTV-SG-2.)

Table 25
Current Transformer Input to Micro Module 1U3 (1)

Primary Current (I1) to Auxiliary CTs 2T5, 2T6 & 2T7	Input Voltage @ 1TB4-11, -12; 1TB4-9, -10; & 1TB4-7, -8 Respectively (Note 3)
0.50 amps RMS	1.34 ± 0.05 volts RMS
1.00 amps RMS	1.83 ± 0.05 volts RMS
1.25 amps RMS	2.06 ± 0.05 volts RMS
1.50 amps RMS	2.28 ± 0.05 volts RMS
1.75 amps RMS	2.51 ± 0.05 volts RMS
2.00 amps RMS	2.73 ± 0.05 volts RMS
2.25 amps RMS	2.95 ± 0.05 volts RMS
2.50 amps RMS	3.17 ± 0.05 volts RMS
2.75 amps RMS	3.39 ± 0.05 volts RMS
3.00 amps RMS	3.62 ± 0.05 volts RMS
3.25 amps RMS	3.84 ± 0.05 volts RMS
3.50 amps RMS	4.06 ± 0.05 volts RMS
3.75 amps RMS	4.28 ± 0.05 volts RMS
4.00 amps RMS	4.51 ± 0.05 volts RMS
4.25 amps RMS	4.71 ± 0.05 volts RMS
4.50 amps RMS	4.93 ± 0.05 volts RMS
4.75 amps RMS	5.14 ± 0.05 volts RMS
5.00 amps RMS	5.37 ± 0.05 volts RMS
5.50 amps RMS	5.80 ± 0.05 volts RMS
6.00 amps RMS	6.24 ± 0.05 volts RMS
8.00 amps RMS	7.96 ± 0.05 volts RMS

Notes:

1. To calculate primary current (I1), use the following equation:

$$(I1) = \frac{\text{Line Current}}{\text{CTRA}} \times 5$$

where: (I1) is the primary current to the auxiliary current transformer (CT); the "CTRA" value to for 2T1, 2T2, and 2T3 respectivaly (Table 26); and "Line Current" is the primary current thru the line CTs (2T2, 2T2 and 2T3).

To calculate %RLA, measure line current directly; then use the following equation:

$$\%RLA = \frac{\text{Line Current}}{\text{100\% of Unit RLA Rating}} \times 100\%$$

2. Accuracy of the line CT is ± 1%.
3. Excludes meter error.
4. RMS = root mean square ((i.e., standard AC meter units).

Table 26
Line CT Ratios (2T1, 2T2 and 2T3)

RLA Range	CT Ratio (Note 1)	Line CTRA Value (Note 3)	Primary Turns (PR1; Note 2)	Meter Scale (3)
28.6 to 35.7	150 : 5	150	3	50
35.8 to 42.8	180 : 5	180	3	60
42.9 to 53.5	150 : 5	150	2	75
53.6 to 64.2	180 : 5	180	2	90
64.3 to 71.4	200 : 5	200	2	100
71.5 to 89.2	250 : 5	250	2	125
89.3 to 107.1	150 : 5	150	1	150
107.2 to 128.5	180 : 5	180	1	180
128.6 to 142.8	200 : 5	200	1	200
142.9 to 178.5	250 : 5	250	1	250
178.6 to 214.2	300 : 5	300	1	300
214.3 to 250.0	350 : 5	350	1	350
250.1 to 285.7	400 : 5	400	1	400
285.8 to 357.1	500 : 5	500	1	500
357.2 to 428.5	600 : 5	600	1	600
428.6 to 500.0	700 : 5	700	1	700
500.1 to 571.4	800 : 5	800	1	800
571.5 to 714.2	1000 : 5	1,000	1	1000
714.3 to 857.1	1200 : 5	1,200	1	1200
857.2 to 1071.4	1500 : 5	1,500	1	1500
1071.5 to 1285.7	1800 : 5	1,800	1	1800
1285.8 to 1500.0	2100 : 5	2,100	1	2100
1500.1 to 1785.7	2500 : 5	2,500	1	2500

Notes:
1. The CT ratio represents the size of the current transformers used with the specified RLA range.
2. Each "primary turns" (PRI) value indicates the number of times that the main power line passes through its current transformer.

Examples: PRI = 1 PRI = 2

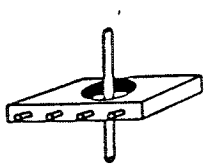

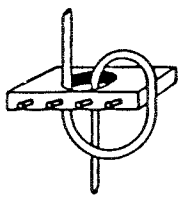

3.If ampmeters are used with the CTs, their full-scale deflection will equal the "meter scale" values in this table.

Note: Meter Scale = $\frac{\text{Line CTRA}}{\text{PRI Turns}}$

where "Line CTRA" is the first number of the line CT ratio.

7. Calculate the "I1" values for primary current to the auxiliary CTs at 100% and 85% of design RLA using the following equations:

$$I1 \text{ for } 100\% \text{ RLA} = \text{Design RLA} \times \frac{5}{\text{Meter Scale}}$$

$$I1 \text{ for } 85\% \text{ RLA} = 0.85 \times \text{Design RLA} \times \frac{5}{\text{Meter Scale}}$$

where,

"I1" is the primary current to the auxiliary CTs (2T5, 2T6, and 2T7); "Meter Scale" is the effective line CT ratio (see Table 26); and "Design RLA" is the RLA value stamped on the chiller nameplate.

8. Use Table 25 to determine the input voltage values that correspond to the 100% and 85% RLA values calculated in Step 7.

9. Monitor--and record--the micro module's phase current voltage inputs at Terminals 1TB4-7 and -8, 1TB4-9 and -10, and 1TB4-11 and -12, respectively, during the start sequence. Use Table 25 to convert the recorded input voltages to corresponding "I1" values for primary current to the auxiliary CTs.

If primary current to the auxiliary CTs drops from more than 100% RLA to less than 85% of RLA (see Step 7 of this procedure)--but the input voltage at Pin 1P4-1 does not increase from 0.0-0.1 VDC to 0.85-1.6 VDC, micro module 1U3 may be defective. Perform the power supply checkout procedure described in the next section of this bulletin before condemning 1U3.

If primary current to the auxiliary CTs does not drop from over 100% to less than 85% RLA, then check the integrity (i.e., including wiring and part numbers) of each current transformer. See "Current Transformer Checkout" that follows.

Current Transformer Checkout

Each phase of the incoming power supply to the compressor motor is provided with line (2T1, 2T2, 2T3) and auxiliary (2T5, 2T6, 2T7) current transformers. All of these CTs are mounted in the starter panel; current transformer connections are shown in Figure 30.

Note: Polarity is critical for proper setup of both line and auxiliary current transformers. Be sure to check each CT for proper polarity--and all CT wiring for faulty connections--before performing the checkout procedure described below. Also, use Table 26 to verify that the correct line CTs are in use, and that the proper terminals are connected.

WARNING: Use extreme care when performing this checkout procedure while the chiller is energized. Carelessness can result in injury or death.

1. Use a series ammeter to monitor the output of Phase L1's line current transformer (2T1).

Note: This check cannot be made reliably with a clamp-on ammeter; always use a series ammeter on the line CT secondary!

2. Check the CT ratio, and verify that the measured input and output values conform to this ratio.

Figure 30
Current Transformer (CT) Connections

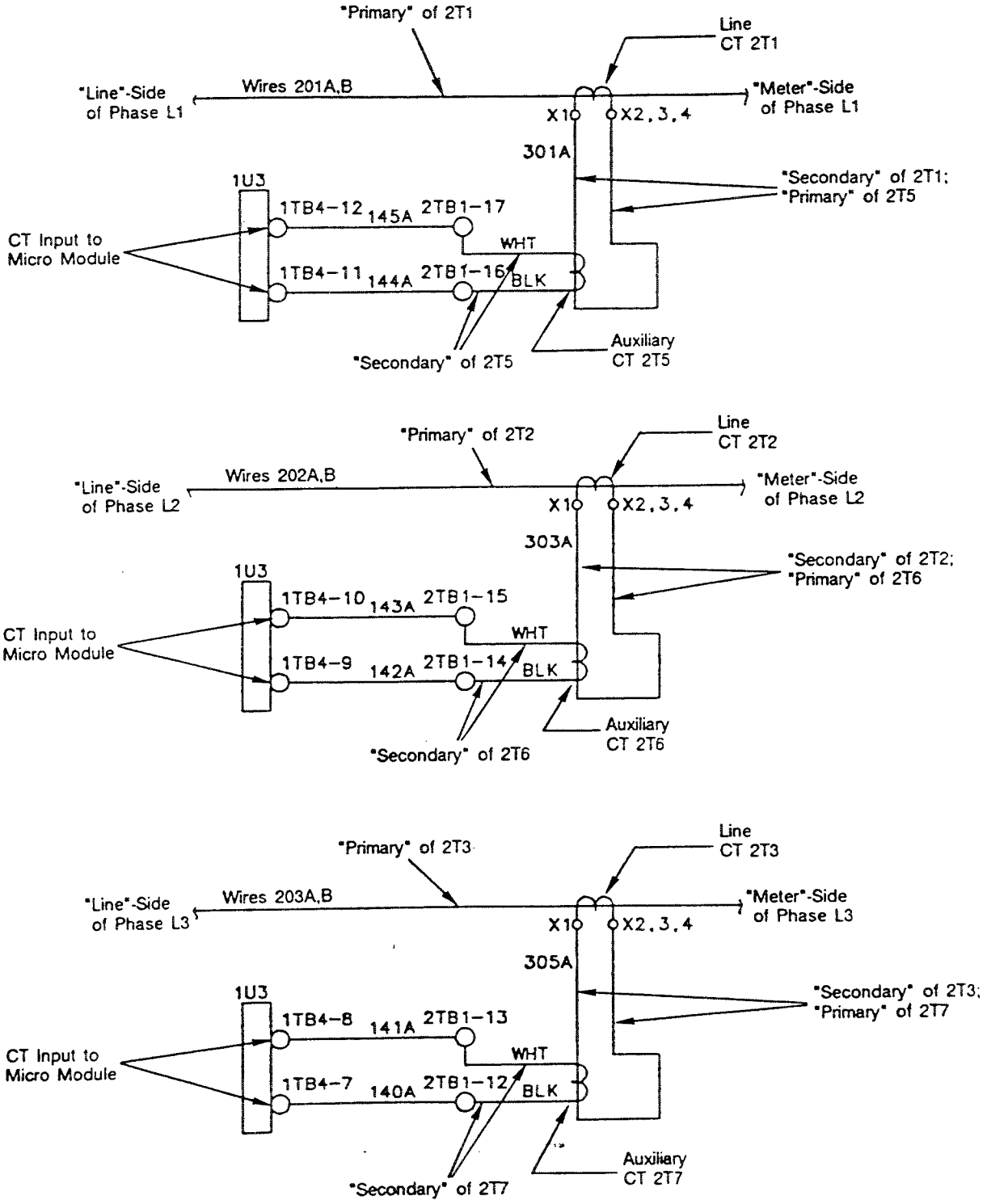

If these values do not conform, determine why and make the necessary repairs. (In some cases, the primary winding is wound more than once through the current transformer. This reduces the primary-to-secondary ratio by a factor equalling the number of loops through the transformer. See Table 26.)

Note: In order to check CT input and output voltages, CT line and secondary amp flows must be monitored while the unit is running.

3. Check the voltage at Terminals 1TB4-11 and -12 on micro module 1U3, and compare this value to the corresponding auxiliary CT primary current (I1) value in Table 25 to verify the integrity of 2T5.

4. Repeat Steps 1 through 3 for Phase L2 and Phase L3. Check the integrity of auxiliary CT 2T6 and 2T7 as described in Step 3 by measuring the voltage at Terminals 1TB4-9 and -10, and Terminals 1TB4-7 and -8, respectively.

Power Supply Checkout Procedure

(UCP695 Control Panels Only)

Note: The following power supply checkout procedure is only applicable for those CVHE units equipped with UCP695 control panels (i.e., chillers of "K" or subsequent design). Check the tenth digit of the model number stamped on the chiller nameplate to determine its design sequence.

Overview

Refer to the UCP layout illustration in Figure 7 on page 34. The UCP695 control panel utilizes a power supply transformer (1T1) and power supply output module (1U2) that furnish power to micro module 1U3. The information in this section describes a method for verifying that both of these components (i.e., 1T1 and 1U2) are operating properly. A typical control panel connection diagram is shown in Figure 31. Refer to the electrical schematic in Figure 9 on pages 46-49 or to the electrical diagrams that shipped with the chiller.

Note: It is good practice to check the power supply components (i.e., 1T1 and 1U2) whenever troubleshooting the micro module. Refer to the procedure illustrated by Figure 32 on the page 106. An improper voltage input to 1U3 can cause a good micro module to produce erratic output responses.

Power Transformer (1T1) Checkout

1. Check branch circuit fuse 1F5 for continuity.

2. Confirm that 120 VAC power is available across the 2 black leads of transformer 1T1.

3. Verify that the output cable (1P1) from power supply transformer 1T1 is firmly and correctly attached to 1J1 on power supply output module 1U2.

Before proceeding to Steps 4, 5 and 6, keep these points in mind when taking the requested measurements: (1) the pins on 1P1 are numbered from right to left; and, (2) be sure that good contact is made with the metal of the pin.

4. Connect the black (negative) lead of a digital VOM--set to measure DC voltage--to Pin 1P1-1 (i.e., chassis common). Then, measure the voltages at Pins 1P1-3, -4 and -5, and compare the measured values with the allowable signal ranges shown in Figure 33.

Note: If any of the voltages measured in Step 4 are out of range--and the voltages measured in Steps 5 and 6 are in range, transformer 1T1 is okay but power supply output module 1U2 may be malfunctioning. Check 1U2's output before replacing either component.

5. Switch the digital VOM to register AC voltage, and--with the black VOM lead still connected to Pin 1P1-1--measure the voltages at Pins 1P1-2, -3, -4 and -6. Compare these measured voltages with the allowable signal ranges indicated in Figure 33.

Figure 31
Typical UCP695 Control Panel Connections

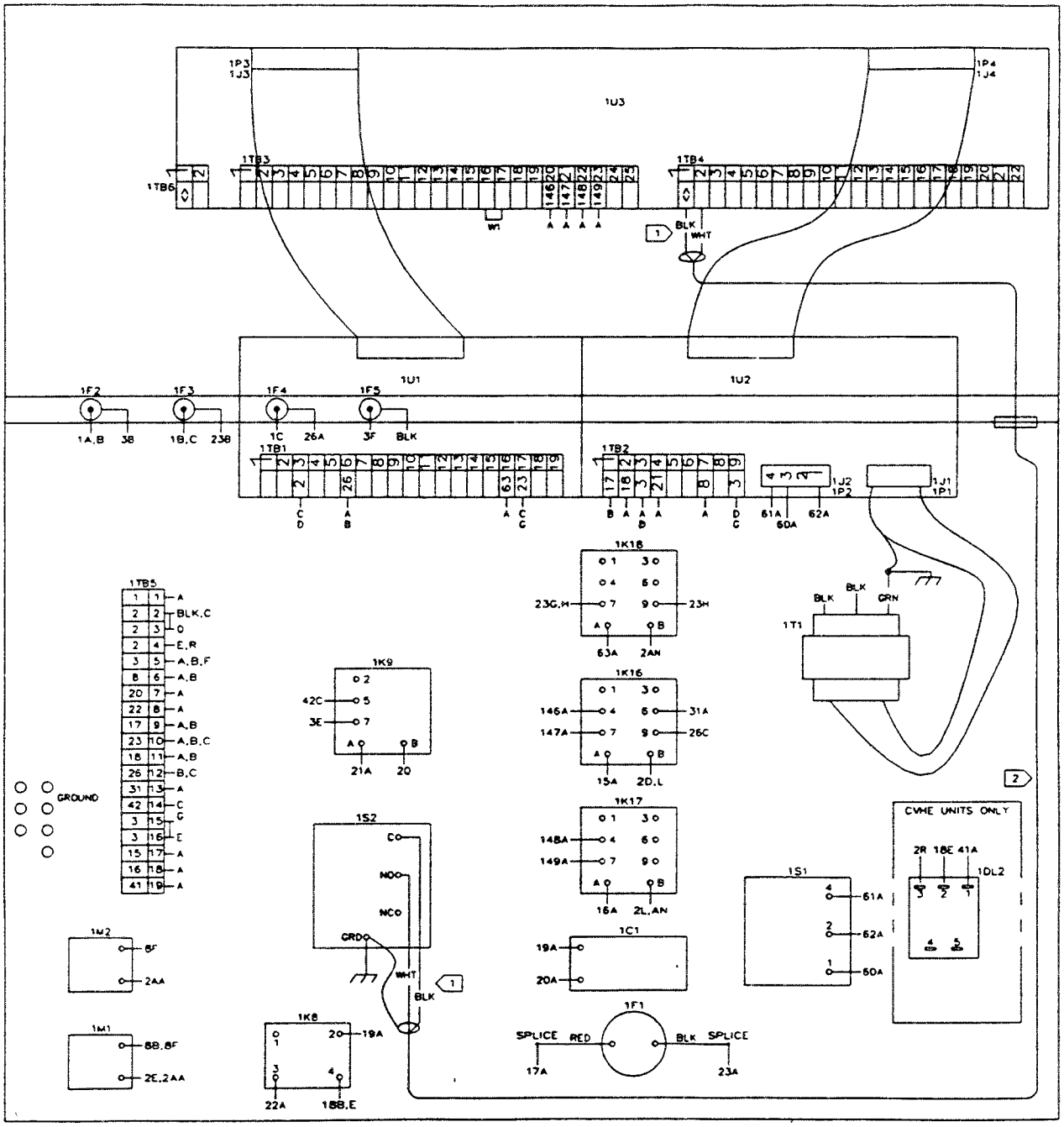

Note: This drawing typical of: CVHE - design sequence "1C" and later; CVHB - design sequence "1D" and later; CVHF - all designs w/UCP695. Refer to appropriate wiring manual for earlier designs.

LEGEND		
1C1 = Oil Pump Capacitor	1K17 = Condenser Water Pump Relay	1TB3 = Terminal Blk - Micro Module Input
1DL2 = Vent Line Interval Timer	1K18 = Free Cooling Relay	1TB4 = Terminal Blk - Micro-Module Input
1F1 = Oil Pump Fuse	1M1 = Hourmeter	1TB5 = Terminal Block - Control Panel
1F2-5 = Branch Circuit Fuses	1M2 = Start Counter (Meter)	1TB6 = Terminal Blk - Micro-Module Input
1J1-4/1P1-4 = Post Header Power Supply	1S1 = Condenser High Pressure Switch	1TB7 = Terminal Block - Hot Gas Bypass
1K8 = Oil Pump Start Relay	1S2 = Oil Pressure Switch	1U1 = Relay Output Module
1K9 = Oil Tank Heater Relay	1T1 = Power Supply Transformer	1U2 = Power Supply Output Module
1K15 = Hot Gas Bypass Relay	1TB1 = Terminal Block - Relay Output	1U3 = Micro Module
1K16 = Chilled Water Pump Relay	1TB2 = Terminal Block - Power Supply	

Figure 32 - Power Supply Checkout Procedure

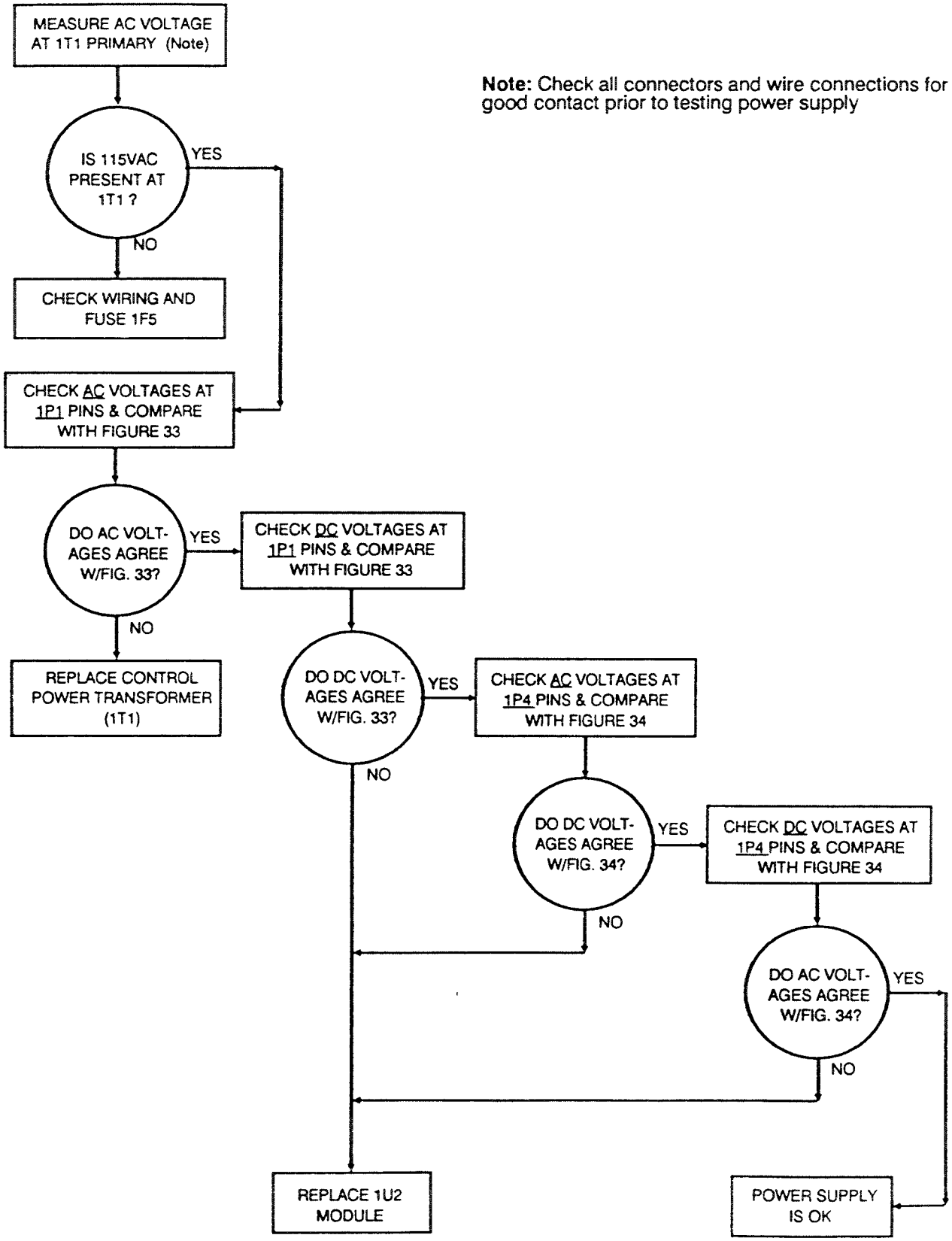

Note: Check all connectors and wire connections for good contact prior to testing power supply

Figure 33
Voltages for Power Supply Transformer
Connector 1P1

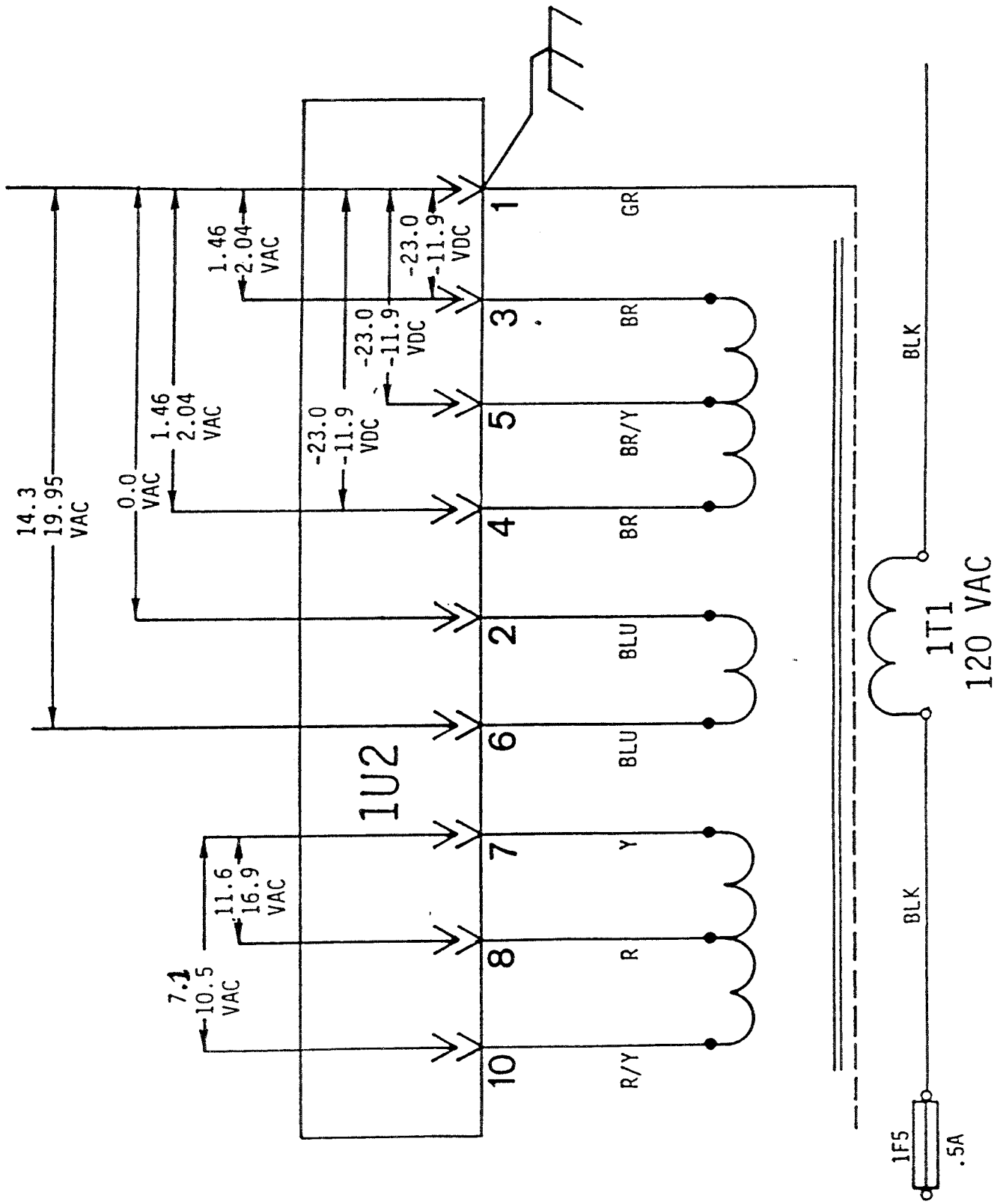

6. Move the black (negative) lead of the VOM to Pin 1P1-7; then measure the voltages at Pins 1P1-8 and -10. Compare the voltage readings obtained with the allowable signal ranges indicated in Figure 33.

Note: If any of the voltages measured in Steps 5 and 6 are out of range, a problem with power supply transformer 1T1 is indicated. Before replacing 1T1, use the blade of a small screwdriver to press the wires of 1J1 firmly into their sockets. Occasionally, the wire insulation is not cut completely when the wires were initially inserted into the connector.

Power Supply Output Module 1U2 Checkout

1. Remove the cover strip located along the top of micro module 1U3, and find ribbon cable connector 1P4. See Figure 31. Verify that ribbon cable 1P4 is firmly and correctly connected to 1J4.

Note: Notice that--in this instance--the pins are numbered from left to right.

2. Using a digital VOM set to register DC voltage signals, connect the black (negative) VOM lead to Pin 1P4-14.

3. Measure the voltages at Pins 1P4-10, -11, -12, -13, -16, -18, -19 and -20. Compare these voltage readings with the allowable voltage signal ranges indicated in Figure 34.

4. Set the VOM to register AC voltage signals; then connect the black VOM lead to Pin 1P4-11 and the red VOM lead to Pin 1P4-10. Measure the voltage between these pins, and compare this value to the "AC component" range shown for Pins 10 and 11 in Figure 34.

Note: If any of the voltages measured in Steps 3 and 4 are out of range--and the power transformer checked out okay, a problem with the power supply output module is indicated.

Figure 34
Voltages for Ribbon Cable Connector 1P4

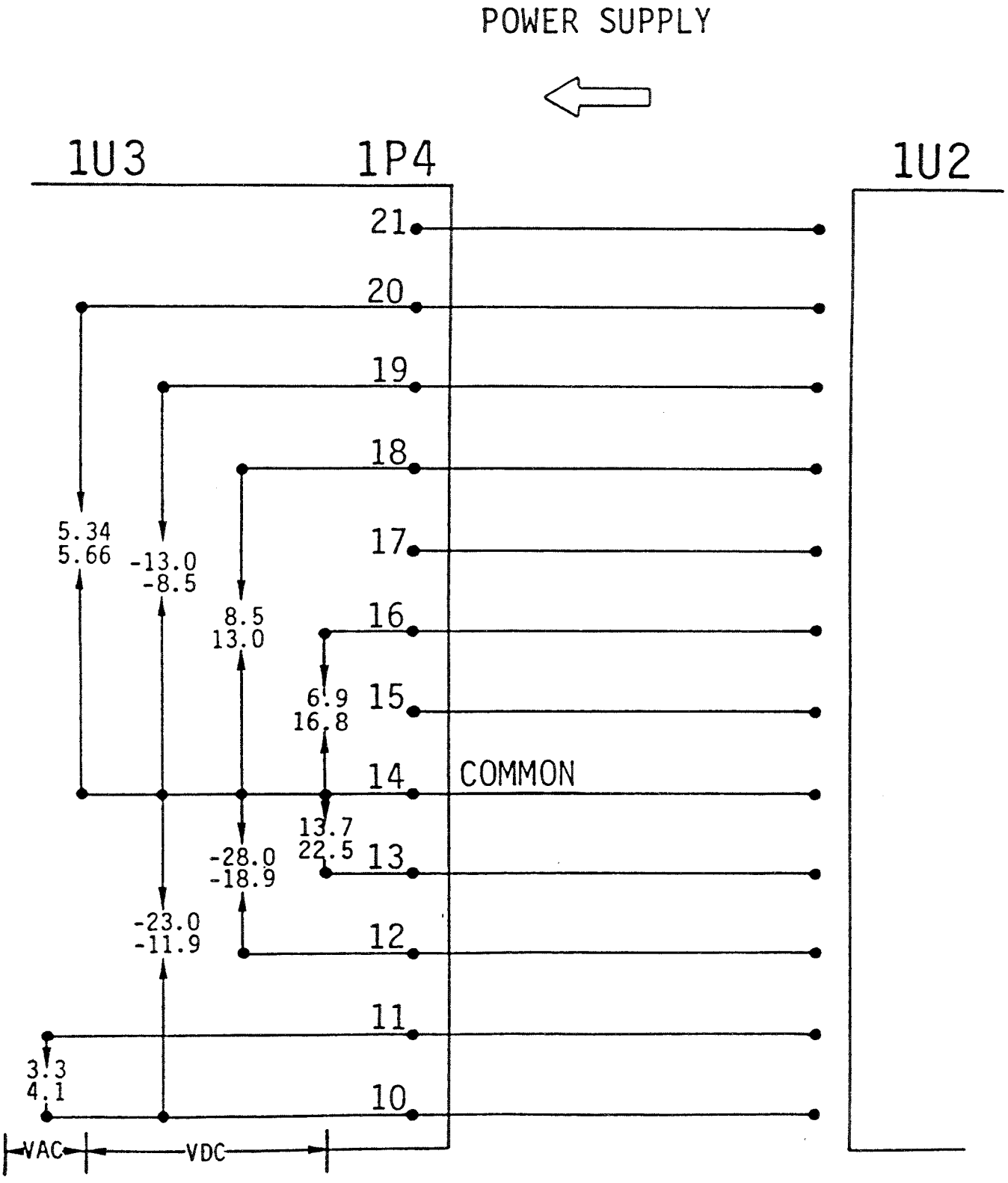

Checkout Procedure for Vane Control Operation

(UCP695 Control Panels Only)

Note: Use the checkout procedure described in this section when the vane actuator does not respond to the vane control switch on the front of the unit control panel. Keep in mind that this procedure is only applicable for those CVHE units equipped with UCP695 control panels (i.e., chillers of "K" or subsequent design). Check the tenth digit of the model number stamped on the chiller nameplate to determine its design sequence.

Several equipment "fault" conditions can prevent the chiller from controlling properly; these include:

[ ] a blown branch circuit fuse (1F3);
[ ] faulty actuator wiring;
[ ] a mechanically or electrically defective actuator;
[ ] a Triac switch failure in relay output module 1U1; and,
[ ] a micro module (1U3) malfunction.

To determine whether or not any of these components are responsible for inhibiting proper chiller control, follow the step-by-step instructions provided below. (Refer to Figure 9 on pages 46-49 for a typical electrical schematic. The UCP695 control panel layout is shown in Figure 31 on page 106.)

1. Verify that branch circuit fuse 1F3 is intact; to do this, check for 115 VAC at Terminal 1TB5-9. See Line 35 in the electrical schematic.

2. Adjust the chiller switch to STANDBY/RESET and the vane control switch to AUTO; then remove power from the vane actuator circuit by removing Fuse 1F3.

WARNING: To prevent injury or death due to electrical shock, lock power supply disconnect open before opening control panel door. Also, remember that terminals connected to remote equipment (e.g., condenser water pump) may remain energized when power is removed from panel. Always check for voltage before disconnecting wires!

3. Disconnect Wire Nos. 24A and 25A from Terminals 1TB1-1 and 1TB1-2, respectively. (Refer to the typical connection diagram in Figure 35 on the next page.)

4. Reinstall Fuse 1F3 and apply power to the UCP695 panel; be sure to exercise care since Wire Nos. 24A and 25A are now "hot" (i.e., each carries 115 VAC).

WARNING: Use extreme care when performing the following checkout procedure with power on; carelessness can result in injury or death due to electrical shock.

5. Check the operation of vane actuator 4B2; to do this:

a. Short Wire No. 24A to ground (Terminal 1TB1-3; see Figure 35), and check for actuator movement. Unless it is already fully open, the actuator should drive open. Proceed to Step 5b.

Figure 35
Typical Connection Diagram for Standard CVHE Units

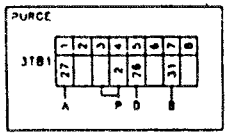

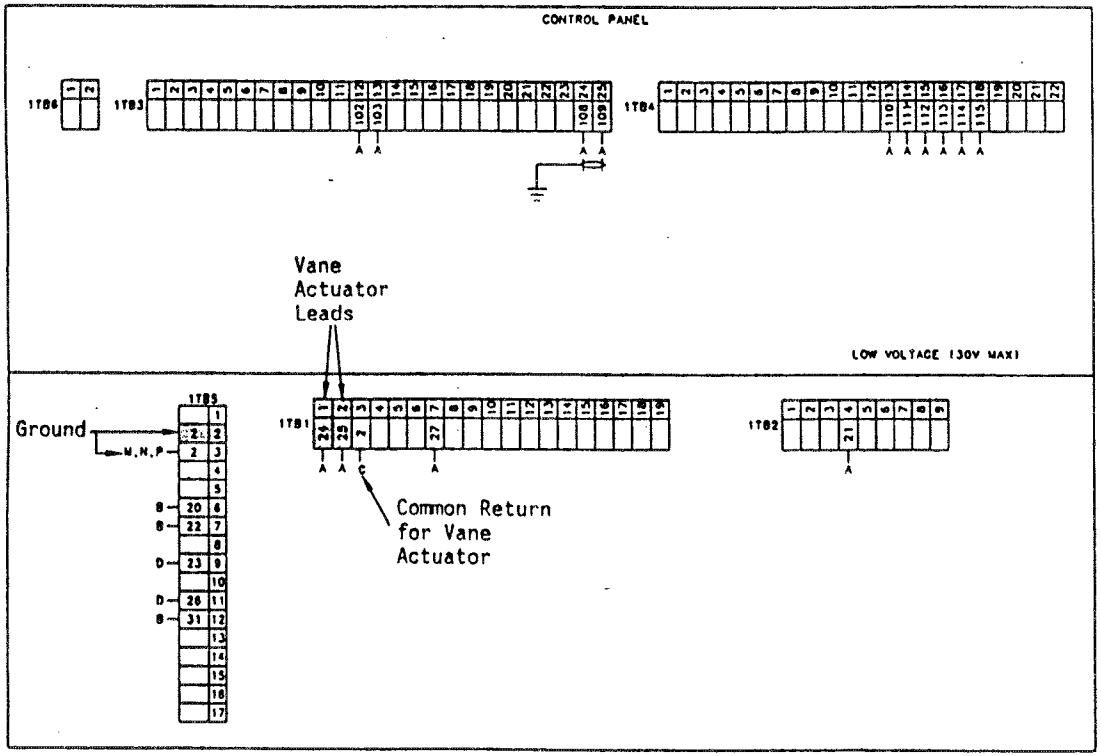

WARNING
Disconnect all electrical power supplies to prevent injury or death due to electrical shock.

Caution
Use copper conductors only to prevent equipment damage.

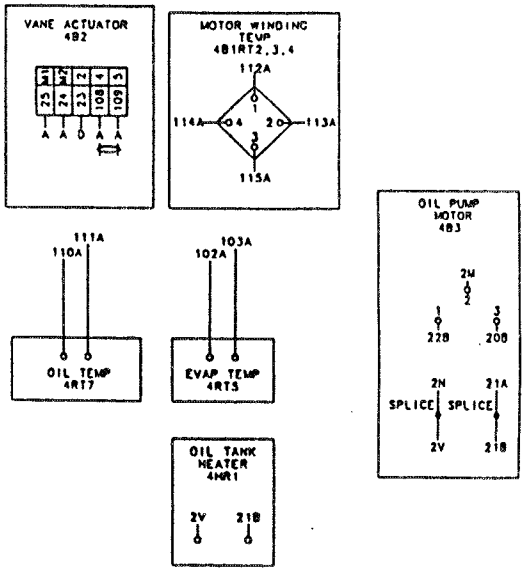

Drwg. X39470468

If the actuator does not move--and is not already fully open, thoroughly check the vane actuator assembly (including end switches) and actuator wiring for defects. Make sure that the wire connected to Terminal 1TB1-3 is common with the wire connected to Terminal 1TB5-2 (ground). Repair or replace as necessary.

b. Short Wire 25A to ground (Terminal 1TB5-2), and check for actuator movement. The actuator should drive closed unless it is already in the full-closed position.

If the actuator does not move--and is not already fully closed, check the actuator (including end switches) and actuator wiring for defects. Again, verify that the wire connected to Terminal 1TB1-3 is common with the wire connected to Terminal 1TB5-2 (ground). Repair or replace as necessary.

After verifying the integrity of the actuator, complete Steps 6 through 11 to confirm that micro module 1U3 is functioning properly.

Note: If the results obtained in Step 5 indicated a defective actuator or faulty actuator wiring, remove power from the unit and perform the necessary repairs before completing this checkout procedure!

WARNING: To prevent injury or death due to electrical shock, lock power supply disconnect open before servicing unit.

6. With the control panel energized and the chiller switch set at STANDBY/RESET", turn the vane control switch to the HOLD position.

WARNING: Use extreme care when performing this checkout procedure with power on; carelessness can result in injury or death due to electrical shock.

7. Check the voltage at Pin 1--with respect to Pin 11--of the 1P3 post header power supply plug. (Figure 31 on page 106) indicates the relative position of 1P3 in the UCP695 chiller control panel.)

The voltage signal measured at Pin 1 should be 0.0 to 0.06 VDC if micro module 1U3 is functioning properly.

If the measured voltage at Pin 1 is outside this range, 1U3 may be defective. Perform the "Power Supply Checkout Procedure" (pages 105-110) before condemning 1U3!

Note: Whenever micro module replacement is indicated, always perform the "Power Supply Checkout Procedure to confirm that 1U3 is actually defective.

8. Readjust the vane control switch to the UNLOAD position.

9. Again check the voltage at Pin 1-- with respect to Pin 11-- of 1P3; this time, the measured voltage should be 5.1 to 5.6 VDC if micro module 1U3 is operating correctly.

If the measured voltage at Pin 1 is outside this range, 1U3 may be defective. See the "Power Supply Checkout Procedure" on pages 105-110.

10. Adjust the vane control switch to HOLD, and check the voltage at Pin 2--with respect to Pin 11--of 1P3. If micro module 1U3 is operating properly, the measured voltage should be 0.0 to 0.06 VDC.

If the voltage reading obtained is outside this range, 1U3 may be defective. See the "Power Supply Checkout Procedure" on pages 105-110.

11. Turn vane control switch back to LOAD, and again check the voltage at Pin 2--with respect to Pin 11--of 1P3. This time, the measured voltage should be 5.1 to 5.6 VDC if micro module 1U3 is functioning correctly.

If the meter indicates a voltage outside outside this range, 1U3 may be defective. See the "Power Supply Checkout Procedure" on pages 105-110.

Vane position is governed by two Triac switches (1U1Q7, "vanes open"; 1U1Q8, "vanes closed") inside relay output module 1U1. See Lines 35 and 36 of the electrical schematic. To verify whether or not both of these Triacs are operational, complete Steps 12 through 16.

Note: If the results obtained in Steps 6 through 11 indicate a defective micro module (1U3)--and completion of the "Power Supply Checkout Procedure" (pages 105-110) confirms this diagnosis, remove power from the unit and replace 1U3 before completing this checkout procedure!

WARNING: To prevent injury or death due to electrical shock, lock power supply disconnect open before servicing unit.

12. With the control panel energized and the chiller switch set at STANDBY/RESET, adjust the vane control switch to the HOLD position (i.e., both Triac switches should now be open).

WARNING: Use extreme care when performing this checkout procedure with power on; carelessness can result in injury or death due to electrical shock.

Note: Review Steps 13 through 17 below. In each of these steps, be sure to remove Branch Circuit Fuse 1F3 before disconnecting or reconnecting Wire No. 24A or 25A.

13. Connect Wire No. 24A to Terminal 1TB1-1; see Figure 35. (Remember that both Wire No. 24A and Wire No. 25A were disconnected in Step 3.)

Check for actuator movement. If the actuator drives open (assuming that it is not already fully open), the "vanes open" Triac switch (1U1Q7) is shorted; since 1U1Q7 is an integral part of the relay output module, 1U1 is defective and must be replaced.

14. Disconnect Wire No. 24A from Terminal 1TB1-1, and connect Wire No. 25A to Terminal 1TB1-2; again, check for actuator movement.

If the actuator drives closed (assuming that it is not already fully closed), the "vanes closed" Triac switch (1U1Q8) is shorted; since 1U1Q8 is an integral part of the relay output module, 1U1 is defective and must be replaced.

15. With Wire No. 25A still connected to Terminal 1TB1-2, readjust the vane control switch to the UNLOAD position and check for actuator movement.

If the actuator does not drive closed--and it is not already in the full-closed position, Triac switch 1U1Q8 failed open; replace relay output module 1U1.

16. Disconnect Wire No. 25A from Terminal 1TB1-2 and set the vane control switch at LOAD; then connect Wire No. 24A to Terminal 1TB1-1 and check for actuator movement.

If the actuator does not drive open--and it is not already in the full-open position, Triac switch 1U1Q7 failed open; replace relay output module 1U1.

17. Remove power from the UCP695 control panel and complete any repairs indicated in Steps 12 through 16; then:

a. Connect Wire No. 24A to Terminal 1TB1-1 and Wire No. 25A to Terminal 1TB1-2.

b. Adjust the vane control switch to the AUTO position.

c. Set the chiller switch at either AUTO/LOCAL or AUTO/ REMOTE, as desired.

d. Restore power to the UCP695 control panel.

Index A:
List of Illustrations

4 Figure 1
Operator Control Panel
12 Figure 2
UCP Service Interface and DIP Switch Locations
22 Figure 3
Unit Address DIP Switch Block (S11)
23 Figure 4
Settings for DIP Switches 1, 2, 3 On Switch Block S9
24 Figure 5a
Purge/Unit Identification/Temperature Range/Unit-of-Measure DIP Switch Block (S9)
25 Figure 5b
Acceleration Time/Electrical Frequency/Surge Protection DIP Switch Block (S3)
32 Figure 6
Micro Module 1U3 Input Connections
34 Figure 7
Typical UCP695 Panel Components
44 Figure 8
Starter-Section Electrical Schematics for Alternate Starter Types Used With CVHE Units
46 Figure 9
Electrical Schematic for Standard CVHB/E/F w/Wye-Delta, Remote-Mounted Starter
52 Figure 10
Diagnostic "b A3"; Evaporator Refrigerant Temperature Range
53 Figure 11
Diagnostics "b A4, b A7, b A8"; Motor Temperature Sensors # 1, # 2 or # 3
56 Figure 12
Diagnostic "b A5"; Maximum Acceleration Time Range
57 Figure 13
Diagnostic "b A9"; Oil Temperature Sensor
59 Figure 14
Diagnostic "b Ab"; Leaving Water Temperature Sensor
63 Figure 15
Diagnostic "b Ad"; Evaporator Refrigerant Temperature Sensor
65 Figure 16
Diagnostic "b AE"; Ambient Temperature Sensor (Optional)
67 Figure 17
Diagnostics "b AF" and "b b0"; Bearing Temperature Sensors
69 Figure 18
Diagnostic "b dc"; Condenser Water Flow Overdue
71 Figure 19
Diagnostic "b E2"; Momentary Power Loss

74 Figure 20
Diagnostic "b E7"; High Motor Temperature
76 Figure 21
Diagnostic "b E8"; Differential Oil Pressure Switch
78 Figure 22
Diagnostics "b EA" & "b Eb"; High Bearing Temperature (Optional)
80 Figure 23
Diagnostic "b Ed"; Chilled Water Flow
83 Figure 24
Diagnostic "b F1"; Running External Interlock
85 Figure 25
Diagnostic "b F2"; Low Oil Pressure
88 Figure 26
Diagnostic "b F4"; High Oil Temperature
90 Figure 27
Diagnostic "b F7"; Condenser Water Flow
92 Figure 28
Diagnostic "b F9"; Free Cooling Valve
94 Figure 29
Diagnostic "b Fb"; Low Evaporator Temperature
103 Figure 30
Current Transformer (CT) Connections
106 Figure 31
Typical UCP695 Control Panel Connections
107 Figure 32
Power Supply Checkout Procedure
108 Figure 33
Voltages for Power Supply Transformer Connector 1P1
110 Figure 34
Voltages for Ribbon-Cable Connector 1P4
112 Figure 35
Typical Connection Diagram for Standard CVHE Units

Index B:
List of Tables

8 Table 1
UCP Display Menus

9 Table 2
Codes for Unit Operating Modes

10 Table 3
Unit-Level Diagnostic Codes

14 Table 4
Compressor "Stop" Points

22 Table 5
Settings for DIP Switch Block S11

23 Table 6
Settings for DIP Switches 1, 2, 3 On Switch Block S9

24 Table 7
Settings for DIP Switches 2 and 3 On Switch Block S9

24 Table 8
Setting for DIP Switch 1 On Switch Block S9

24 Table 9
Settings for DIP Switch 4 On Switch Block S9

25 Table 10
Settings for DIP Switch 5 On Switch Block S9

26 Table 11
Available Maximum Acceleration Time Settings for Switches 1-5 On Switch Block S3

27 Table 12
Settings for DIP Switch 6 On Switch Block S3

27 Table 13
Settings for DIP Switch 7 On Switch Block S3

28 Table 14
Unit RLA Meter Scale Conversion

29 Table 15
RLA Factors/S1 DIP Switch Settings Conversion

41 Table 16
Ribbon Connector 1P4 Voltages for Power Supply/Output Module 1U2

42 Table 17
Ribbon Connector 1P3 Voltages for Relay Ouput Module 1U1

50 Table 18
Unit Time Delays and Safety Control Cutout Settings

54 Table 19
Motor Winding Temperature Sensor Conversion Data

58 Table 20
Sensor Conversion Data: Oil Temperature Sensor (4RT7) and Optional Bearing Temperature Sensors (4RT8, 4RT9)

60 Table 21
Sensor Conversion Data: Evaporator Leaving Water Temperature (4RT1) and Optional EWT Sensors (4RT2)

Appendix B - List of Tables (Cont'd.)

61 Table 22
Conversion Data for Condenser Pressure Transducer 1R1

64 Table 23
Sensor Conversion Data: Evaporator Refrigerant Temperature Sensor (4RT5)

66 Table 24
Sensor Conversion Data: Optional Ambient Temperature Sensor (4RT6)

100 Table 25
Current Transformer Input to Micro Module 1U3

101 Table 26
Line CT Ratios (2T1, 2T2, 2T3)

Index C:
UCP Diagnostic Procedures

51 **b A3**
Evaporator Refrigerant Temperature Range
51 **b A4**
Motor Temperature Sensor # 1
51 **b A5**
Maximum Acceleration Time Range
51 **b A7**
Motor Temperature Sensor # 2
51 **b A8**
Motor Temperature Sensor # 3
55 **b A9**
Oil Temperature Sensor
55 **b Ab**
Leaving Water Temperature Sensor
61 **b AC**
Condenser Refrigerant Pressure Sensor
62 **b Ad**
Evaporator Refrigerant Temperature Sensor
62 **b AE**
Ambient Temperature Sensor
62 **b AF**
Bearing Sensor # 1 (Inboard)
62 **b b0**
Bearing Sensor # 2 (Outboard)
62 **b d9**
Extended Power Loss
68 **b dA**
Surge
68 **b dC**
Condenser Water Flow Overdue
70 **b E2**
Momentary Power Loss
70 **b E3**
Phase Imbalance
72 **b E4**
Phase Loss
73 **b E5**
Phase Reversal
73 **b E7**
High Motor Temperature
75 **b E8**
Differential Oil Pressure Switch
75 **b E9**
Stop Relay
77 **b EA**
High Inboard Bearing Temp. (Sensor # 1)
77 **b Eb**
High Outboard Bearing Temp. (Sensor # 2)
79 **b EC**
Running Overload
79 **b Ed**
Chilled Water Flow
81 **b EE**
Maximum Acceleration Time Exceeded
81 **b F0**
Transition
82 **b F1**
Running External Interlock
82 **b F2**
Low Oil Pressure
86 **b F3**
Low Oil Temperature
87 **b F4**
High Oil Temperature
89 **b F5**
High Condenser Refrigerant Pressure
89 **b F7**
Condenser Water Flow
91 **b F8**
Improper Unit Identification
91 **b F9**
Free-Cooling Valves
93 **b FA**
Actuator
93 **b Fb**
Low Evaporator Refrigerant Temperature
95 **b Fd**
External Interlock
95 **b FF**
Unit Control Module

TRANE

General Service Bulletin

CVHE-SB-23

Library	Service Literature
Product Section	Refrigeration
Product	Centrifugal Liquid Chillers
Model	CVHE
Literature Type	General Service Bulletin
Sequence	23
Date	May 2, 1990
File No.	SV-RF-CTV-CVHE-SB-23-590
Supersedes	

Literature Changes:
CVHE-SB-23 (4/90) – Original issue of bulletin.

Subject: Mandatory Return For CNT-1091 Surge Arrestors (MOV's) On CVHE/CVHB Units With In-Warranty Motor Failures

Introduction:

During September of 1988, Trane initiated factory installation of two surge protective devices (M.O.V.'s) on all 600-volt or lower-voltage CVHE and CVHB motors. These devices are connected between the six motor leads and to ground. They are mounted through the motor terminal box enclosure on direct-ship starter units and through the motor-to-starter housing on units equipped with unit-mounted starters (UMS-type units).

Discussion:

Both MOV's on each 600-volt or lower-voltage CVHE or CVHB unit that has a motor failure within the warranty period of the unit, must be returned to La Crosse.

Note: If the MOV's are on a CenTraVac unit that is out of warranty, return the MOV's only if they are on the "Return Exception List".

Each returned MOV will be analyzed to determine its condition and to help establish the most likely cause of the motor failure.

Since the Trane Company has a policy of continuous product improvement, it reserves the right to change specifications and design without notice. The installation and servicing of the equipment referred to in this booklet should be done by qualified, experienced technicians.

Units Affected:

All Model CVHE and CVHB units 600-volts or lower voltage equipped with MOV voltage surge protectors (manufactured during September of 1988 and thereafter).

Recommended Action:

Disconnect MOV leads and mark each lead with its' corresponding motor terminal-stud designator (i.e., T-1 thru T-6). Remove both MOV's from the unit and tag each MOV "set" with the following information:

- Job Name;
- CVHE/CVHB Model Number;
- CVHE/CVHB Serial Number;
- Motor Failure Date;
- Motor Serial Number;
- ACS Claim Number.

Return tagged MOV sets to:

The Trane Company
Q.C. Lab Bldg-15
2512 So. 21st Place
La Crosse, WI 54601

Note: Do not send MOV's back to the motor manufacturer. Two new MOV's must be installed to replace the one's being returned.

Parts Ordering Information:

Order two MOV's for each motor failure occurence:

Trane Part No. = CNT-1091 MOV Surge Protector.
(Contains one MOV surge protector per each part no. ordered.)

Order from La Crosse, "Ship from 31"

Note: This service bulletin is informational only and does not authorize parts or labor.

© American Standard Inc. 1990

TRANE™

General Service Bulletin

CVHE-SB-24

Library	Service Literature
Product Section	Refrigeration
Product	Centrifugal Liquid Chillers
Model	CVHE
Literature Type	General Service Bulletin
Sequence	24
Date	June 29,1990
File No.	SV-RF-CTV-CVHE-SB-24-690
Supersedes	

Literature Changes:
CVHE-SB-24 (6/90) -- Original issue of bulletin.

Subject: CVHE Vane-Actuator Motor Limit-Switch Gear Replacement Kit

Introduction:

The purpose of this service bulletin is to advise the field of the availability of a replacement kit for the gear assembly of the vane-actuator motor limit switch used on CVHE units with the UCP-695 control panel.

Discussion:

A kit is now available for replacing the plastic worm-gear assembly in the CVHE vane-actuator motor limit switch. This kit is part number **GER-0315**. The vane-actuator motor has failed on several occasions due to stripped gears in the limit switch.

Units Affected:

All Model CVHE units with UCP-695 micro-control panel.

Since the Trane Company has a policy of continuous product improvement, it reserves the right to change specifications and design without notice. The installation and servicing of the equipment referred to in this booklet should be done by qualified, experienced technicians.

Recommended Action:

Use the following procedure to replace the gear assembly in the vane actuator motor limit switch:

1. Disconnect power to the vane-actuator motor.

WARNING: To prevent injury or death due to electrical shock, open and lock all disconnects before servicing the unit.

2. Remove and set aside the eight retaining screws from the actuator conduit-box cover. Remove the conduit box cover, exposing the limit-switch gear assembly. See Figure 1.

3. Remove and discard the gear/bracket module, the two gear/bracket mounting nuts, and the three shims (washers) located under the gear-bracket.

4. Remove and discard the snap ring and worm gear (on the motor shaft).

5. Mount the new worm gear (provided in the kit) on the motor shaft with hex-end toward actuator motor. Kit components are shown in Figure 2. The snap-ring groove should be exposed. Install the new snap ring (provided in the kit) in the groove. Check the worm gear to be sure it is secure on the motor shaft.

It is not usually necessary to replace the cam gears. If they require replacement, however, remove and discard the cam retaining screws, the cam retainer, and the old cam gears. Install the new cam gears and retainer using the new screws provided in the kit. Cams should be installed on left side of the cam roller as shown in Figure 1. Start but do not fully tighten the cam-retaining screws at this time.

Figure 1
Vane-Actuator Limit Switch Assembly
(Conduit Box Cover Removed)

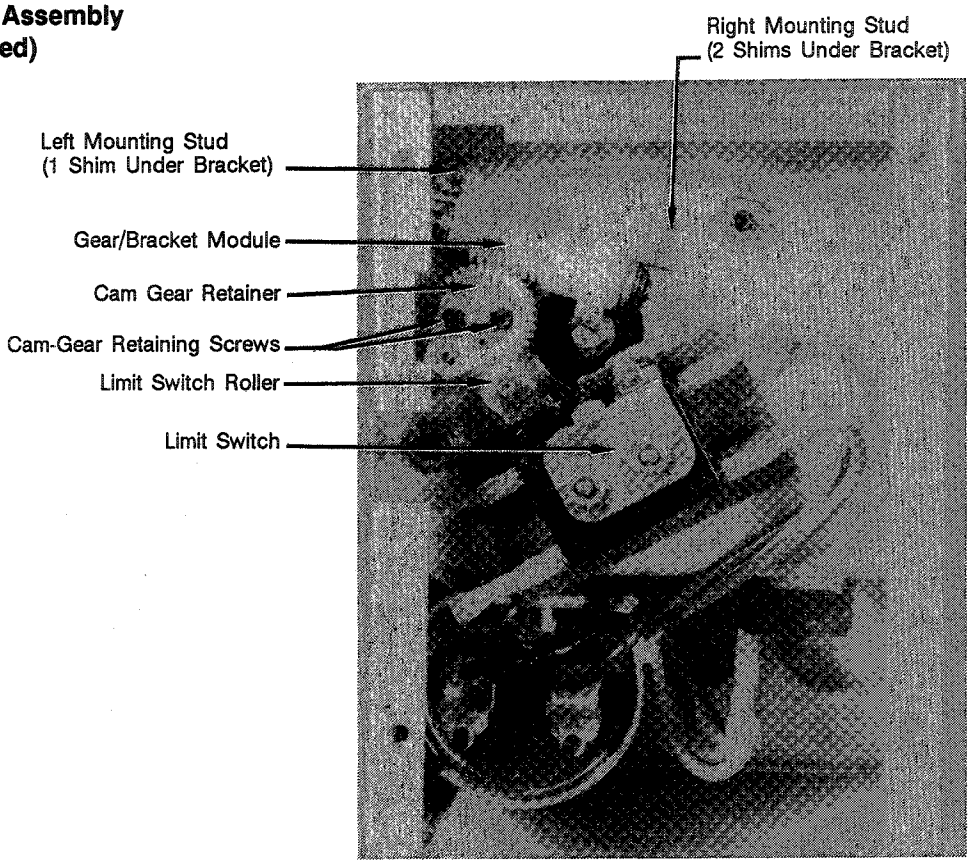

 © American Standard Inc. 1990

6. Place one new shim (Figure 2) on the left gear/bracket mounting stud (Figure 1) and place two new shims over the right gear/bracket mounting stud (Figure 1).

7. Position the new gear/bracket module (provided in the kit) over the mounting studs and install the new mounting nuts (provided in the kit) on the studs. Do not tighten the nuts fully at this time. Adjust position of gear/bracket module to engage both gear sets; then tighten the mounting nuts.

8. Then, check both gear sets for backlash. Gears should rotate slightly, but not excessively. Movement should be restricted to .005 to .010 inches.

Caution: Too much or too little backlash will shorten gear life.

9. Remove mounting pin from actuator extension tube.

10. Restore power to the actuator motor and retract the actuator until the limit switch shuts down the actuator. The extension tube may rotate during this process. Rotate the extension tube (if necessary) until the dimension between the mounting holes (center-to-center) is 16.63 to 16.75 inches.

WARNING: To prevent injury or death due to electrical shock, exercise extreme caution when servicing unit with electrical circuits energized.

While preventing the extension tube from rotating, extend the actuator until the stroke length between the mounting holes (center-to-center) is 21.44 to 21.94 inches. The cam gear retaining screws should be loose enough to allow the cam gear to turn. Turn the cam to engage the limit switch roller. Keep turning the cam until the limit switch makes with an audible "click". Then, tighten the cam gear retaining screws to 4 in./lbs.

11. Replace the mounting pin and cycle the actuator to check limit switch function and stroke length.

12. Replace conduit box cover.

Figure 2
Vane-Actuator Motor Limit Switch Gear Replacement Kit

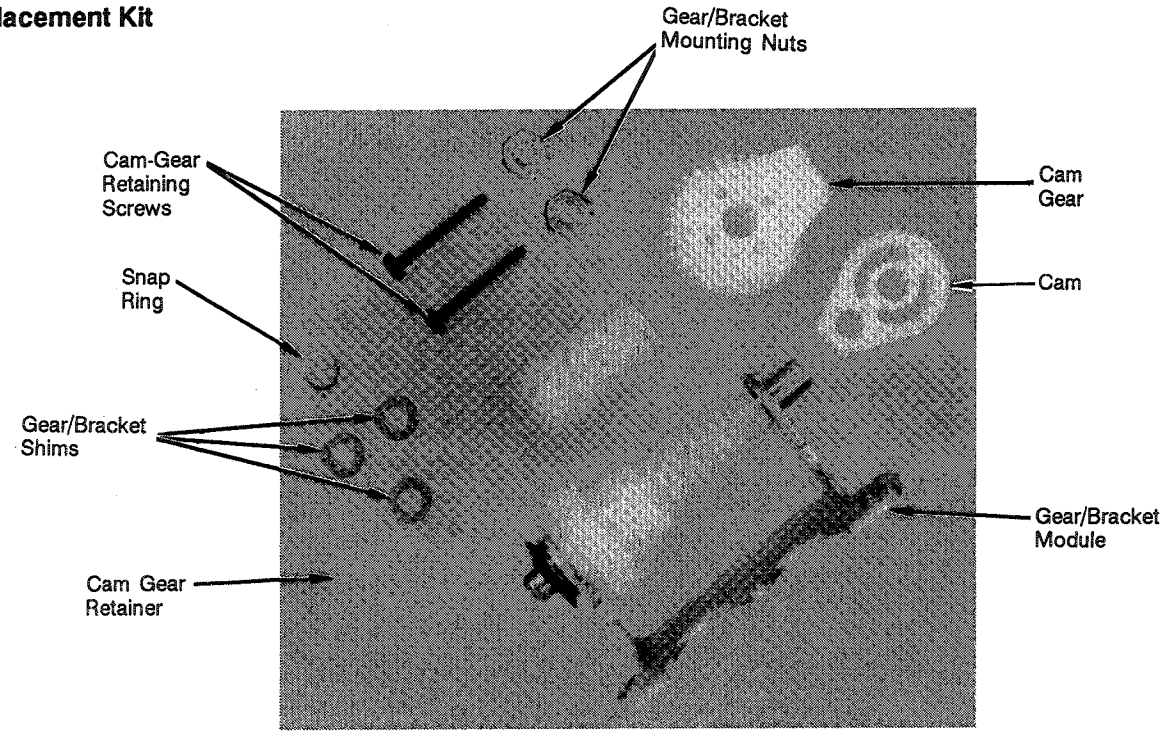

Parts Ordering Information:

Order one vane-actuator limit switch gear kit for each vane-actuator failure occurence due to stripped limit switch gears. Specify the part number listed below:

Trane Part No. = **GER-0315**

Each kit contains:
(1) Motor worm gear;
(1) Snap-ring;
(1) Gear/bracket module;
(2) Gear/bracket module mounting nuts;
(3) Gear/bracket module shims;
(2) Cam gears;
(1) Cam-gear retainer;
(2) Cam-gear retainer screws.

Order from La Crosse, "Ship from 31".

Note: This service bulletin is informational only and does not authorize parts or labor.

RHS

TRANE

General Service Bulletin

CVHE-SB-25

Library	Service Literature
Product Section	Refrigeration
Product	Centrifugal Liquid Chillers
Model	CVHE
Literature Type	General Service Bulletin
Sequence	25
Date	June 1,1990
File No.	SV-RF-CTV-CVHE-SB-25-690
Supersedes	

Literature Changes:
CVHE-SB-25 (6/90) – Original issue of bulletin.

Subject: CVHE 5000-Frame Low-Voltage Motor Cooling

Introduction:

A potential reliablity problem has been identified for 5000-frame, low-voltage Reliance motors typically used on CVHE units, sizes 056 thru 1250 shipped before November 30, 1989. The tightly-bundled lead wires on these motors may overheat under certain conditions. Since motor-lead failure will require replacement of the entire compressor motor, all units equipped with motors affected by this bulletin must be identified and repaired. All operating units must be repaired immediately. Repair of units that have not been started must be accomplished at the time of start-up.

Discussion:

Under certain load conditions (i.e., high load, low head), the tightly-bundled lead-wires on 5000-frame low-voltage Reliance motors may not receive sufficient cooling. Over a period of time, the leads may eventually fail due to a repeated overheating condition. The required repair consists of providing additional cooling to the motor leads by installing a cooling line to the motor.

Units Affected:

All Model CVHE units equipped with 5000-frame, 380 thru 600-volt (512 KW and larger) Reliance motors shipped prior to November 30, 1989. A manufacturing design change has been implemented to correct this condition on all units that shipped after this date.

Since the Trane Company has a policy of continuous product improvement, it reserves the right to change specifications and design without notice. The installation and servicing of the equipment referred to in this booklet should be done by qualified, experienced technicians.

Corrective Action:

All units affected by this bulletin must be retrofitted with a cooling line to provide additional cooling to the motor-lead bundle. To accomplish this, install a 1/2-inch copper line from the refrigerant feed line up to the motor stator housing at the location where the motor leads exit the motor-coil end turns as follows:

Note: Use of the repair procedure that follows is recommended to minimize refrigerant loss, joint leaks and the possibility of bearing damage.

1. Follow the procedures provided in the CVHE Service Guide (CTV-SG-2) to shut the unit down and secure it for service.

2. Following the procedures provided in the CVHE Service Guide (CTV-SG-2), bring the unit internal pressure up to one (1) psig.

3. Perform the remaining retrofit procedure while maintaining a slight positive pressure (1 psig) within the unit.

IMPORTANT: Be sure to maintain positive pressure in the unit, since the retrofit procedure is accomplished with the refrigerant charge in the unit.

4. Braze a 1/2-inch flare plug (modified Mueller Part No. A-123) to the motor refrigerant feed line as illustrated in Figure 1.

Note: The flare plug is provided with the letter of retrofit notification to the Territorial Service Manager.

5. Drill a 3/8-inch hole through the bottom of the flare plug and continue drilling through the wall of the refrigerant feed line. Install a 1/2-inch flare cap on the flare plug to hold the refrigerant in the unit.

6. Identify the 12th digit of the unit model number (on the unit nameplate). This KW designator will be the letter U, V, W, X, Y or Z. By referring to Table 1, use this KW designator to determine Dimension "A" shown in Figure 1. Dimension "A" is the distance from the end of the stator housing to the proper entry point on the housing for the new cooling line.

Caution: Be certain that Dimension "A" is properly identified, since the new coolant line must enter the stator housing at the proper location.

Table 1
Drilling Locator Dimension "A" Identification

KW Nameplate Designator (1)	Motor HP	Motor KW	Motor Code	Dimension "A"
U	650	512	X70551316-23 thru 27	9-1/2"
V	743	588	X70551316-43 thru 47	8-13/64"
	743	588	X70551317-23 thru 27	8-13/64"
W	832	653	X70551317-43 thru 47	7-13/64"
	832	653	X70551317-23 thru 27	7-13/64"
X	946	745	X70551317-63 thru 67	5-11/16"
Y	1088	856	X70551317-73 thru 77	4-13/64"
Z	1220	957	X70551317-83 thru 87	2-11/16"

Notes:
1. CVHE nameplate designator is 12th digit of model number as shown on unit nameplate.

© American Standard Inc.

Figure 1
Motor Lead Cooling Line Installation

End View

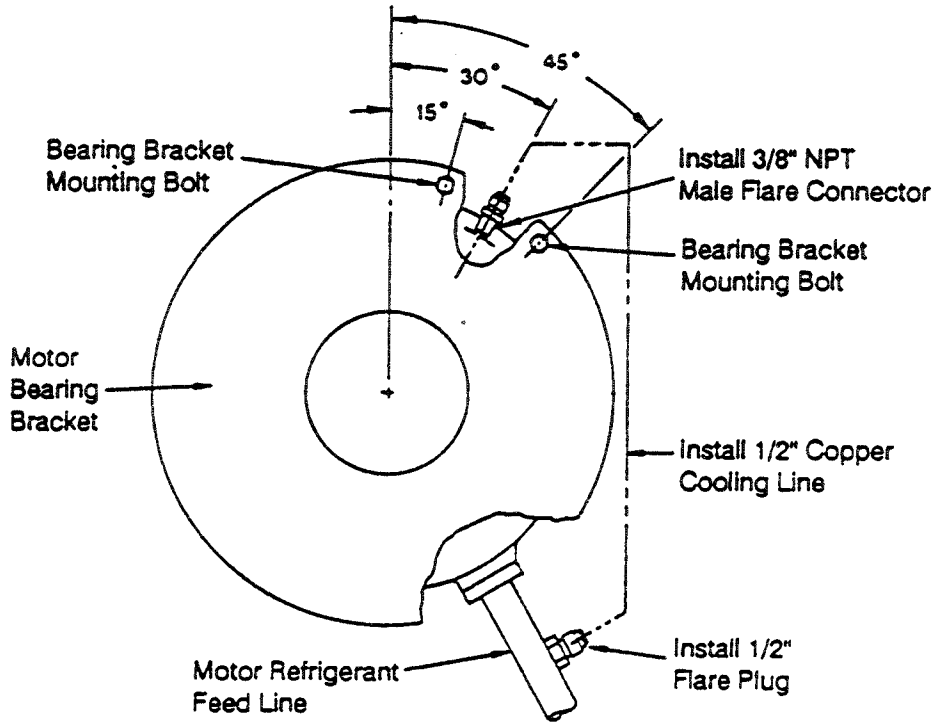

Side View

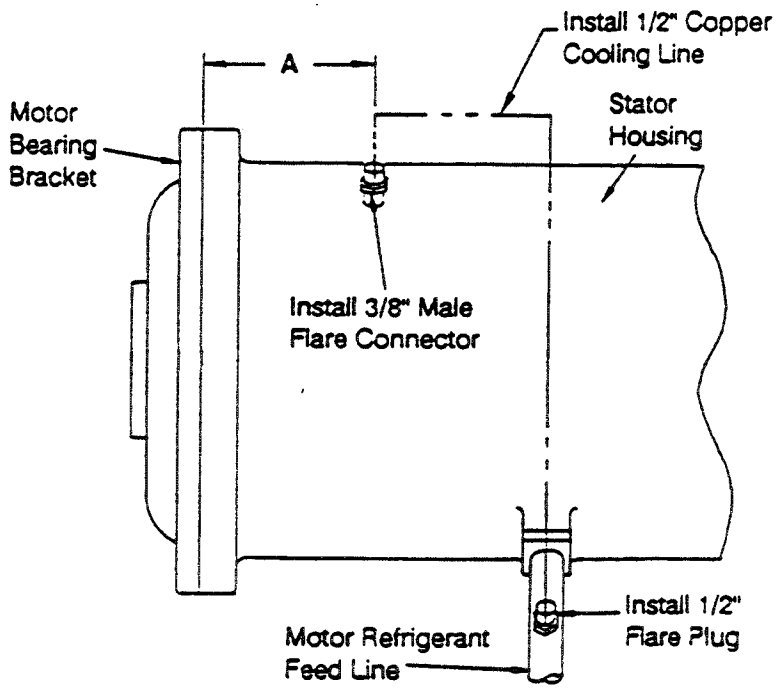

7. Using Dimension "A", locate and mark the proper drilling location at a point 30-degrees from top dead center on the stator housing as shown in Figure 1. This point is midway between the first and second bearing bracket mounting bolts, moving clockwise from top dead center; as viewed from the end of the motor.

8. Drill a 37/64" hole, 3/4-inch deep at this point. Tap this hole for 3/8" NPT. Remove drill chips during drilling with a vacuum or small pencil magnet.

Caution: Do not drill any deeper than 3/4-inch into the stator housing. Use a positive stop on the drill bit to prevent penetration over 3/4-inch (Figure 2).

WARNING! Wear safety glasses to prevent possible eye injury during drilling operation.

9. Screw a 3/8" NPT X 1/2" flare male connector into the tapped hole (Mueller Part No. A334; Trane Part No. X17050029). Install a cap on the flare connection.

Note: The flare connector is provided with the letter of retrofit notification to the Territorial Service Manager.

10. Make up a suitable-length 1/2-inch copper line (refrigerant-grade, Type L) with female flare connectors for each end. Connect the line at the male flare connections on the motor refrigerant feed line and on the stator housing.

11. Leak-test all new fittings and connections.

12. Follow the procedures provided in the CVHE Service Guide (CTV-SG-2) to purge and restart the unit.

Figure 2
Drilling Cooling Line Connection In
Stator Housing

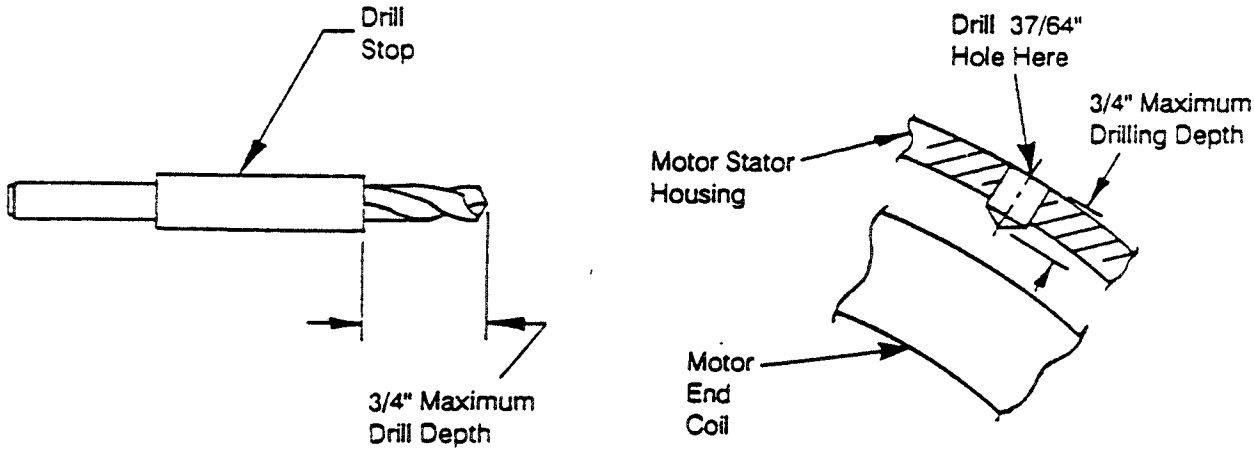

Caution: To prevent damage to motor-end coil, do not allow drill to penetrate deeper than 3/4".

Parts Information:

No parts should be ordered for this procedure.

The parts that follow are provided to the Territorial Service Manger with the letter of retrofit notification. Each service manager will receive the appropriate number of parts required for the units located within his respective territory.

Quantity	Part Description	Part Identification
1	1/2" Flare Plug	(Modified Mueller Part No. A-123)
1	3/8" NPT X 1/2" Flare Male Connector	(Mueller Part No. A-334; Trane Part No. X17050029)

The parts listed below that are required to perform this retrofit procedure are to be obtained locally:

Quantity	Part Description	Part Identification
1	1/2" Type L Copper Tubing (Variable length, depending on unit.)	----------
2	1/2" Female Flare Connectors	----------

TRANE

General Service Bulletin

CVHE-SB-26

Library	Service Literature
Product Section	Refrigeration
Product	Centrifugal Liquid Chillers
Model	CVHE
Literature Type	General Service Bulletin
Sequence	26
Date	December 21,1990
File No.	SV-RF-CTV-CVHE-SB-26-1290
Supersedes	

Literature Changes:
CVHE-SB-26 (12/90) -- Original issue of bulletin.

Subject: CVHE Oil Loss

(This is an informational Service Bulletin Only.)

Introduction:

We have received reports of excessive oil loss some on CVHE units, varying in age and design sequence. The purpose of this service bulletin is to discuss oil loss and available corrective action.

Discussion:

CVHE oil-loss can occur due to a sudden reduction in oil tank pressure. Oil-loss sypmptoms are most likely to occur during these operating conditions:

- Start up after a long shut down;
- Start up with a warm evaporator;
- Shut down at high load (especially with high condensing pressure), and;
- During load shedding.

These operating conditions normally produce sudden reductions in oil tank pressure that can cause the refrigerant dissolved in the oil to out-gas. If this pressure reduction is rapid enough, the out-gassing is not contained in the oil tank, allowing oil to be carried out through oil tank vent line.

Since the Trane Company has a policy of continuous product improvement, it reserves the right to change specifications and design without notice. The installation and servicing of the equipment referred to in this booklet should be done by qualified, experienced technicians.

Each CVHE installation is unique. Oil loss and return efficiency will depend upon system conditions and controls being applied. Oil loss may be a very dynamic event that is difficult to isolate and is not apparent during normal operation. Symptoms of oil loss problems are:

- Three or more gallons of oil are added to the unit and the oil level has not stabilized. The optimum operating oil level is visible in the lower half of the bottom oil-sump sight glass. During unit start-up and shutdown, it is normal for the oil level to drop. The oil level should return, however, after a period of sustained operation.

Note: Trane OIL-22 is the only oil recommended for use in CVHE units. The proper oil charge for all unit sizes is seven (7) gallons.

- The unit loses oil to the point of tripping on low oil pressure.

- Oil tank pressure is more than 6-7 inches of mercury greater than evaporator pressure.

Root Cause:

The root cause of oil loss is: High oil-tank pressure relative to evaporator pressure. The oil tank is vented to the suction cover behind the first stage guide vanes, which is the lowest pressure area in the unit (at or below evaporator pressure). Oil tank pressure is established by:

- The amount of leakage that occurs through the seals, and;
- The amount of oil tank line-loss in the oil tank vent line.

Oil tank pressure tends to follow evaporator pressure, but may be low at part load and even lower at low-load operation, depending on head conditions.

During start-up and shut down, oil-tank pressure moves closer to evaporator pressure. If oil-tank pressure is too high, the pressure drop causes out-gassing and oil loss through the vent line. Rapid changes in operating conditions can also cause sudden oil-tank pressure drop, with resultant oil loss.

A secondary result of high oil tank pressure is, that the oil reclaim system is not effective. The reclaim system relies on the eductor to pump oil out of the suction cover to the oil tank. If a large pressure differential exists between the suction cover and the oil tank, eductor oil return rate is reduced. At high heads and low loads, the normally high oil-tank pressure makes the eductor's ability to return oil marginal.

Units Affected:

All CVHE units.

Corrective Action:

Since each job tends to be unique, a comprehensive evaluation must be made for that jobsite. The first step is to verify that the unit has a full operating refrigerant charge. Secondly, record an accurate system operating log to determine where the unit is operating (as compared to the design specifications) and to determine the degree of oil loss at those actual conditions. Pay particular attention to evaporator pressure versus low oil-tank pressure (be sure that all gauges are properly calibrated). The greater the pressure differential, the greater the oil-loss potential is, and the more likely the chance that the oil recovery system will not adequately reclaim oil. Once it has been determined that an oil loss condition exits, the following corrective action is available:

1a. Increase the vent line (Figure 1) size to 1-1/8". The line is 7/8" on units manufactured through September of 1990. Cut off the 7/8" line as close as possible to the oil tank and use a 1-1/8" x 7/8" reducing coupling. At the suction cover, cut the line and remove the screw-in fitting. Replace it with a 90-degree elbow (Mueller No. W2164) or straight adaptor (Mueller No. W1164), whichever is appropriate for the job. Both are 1-1/8" solder vs. 3/4" NPT. The bent tube in the old suction cover fitting is not required.

1b. Next, install a new ALCO vent-line solenoid valve (Trane Part No. VAL-3217) at the location shown in Figure 1.

1c. Finally, install a second eductor (Trane Part No. TEE-0077) on the 1/4" valve on the evaporator. Tee a 3/8" line from the condenser supply to the eductor, 1/4" line to the evaporator and 3/8" line to the oil tank.

If the oil loss problem persists after performing these steps., contact the CenTraVac and Absorption Systems Business Unit Technical Service Department in La Crosse, Wisconsin.

Special Note:

When a CVHE teardown is performed for any reason, pay particular attention to the third-stage labyrinth seal clearance, (SEL-0366, SEL-0367.) Total clearance should be .004" to .007". Replace the seal if this clearance exceeds .007".

Figure 1
CVHE Vent Line and Vent-Line Solenoid Valve Location

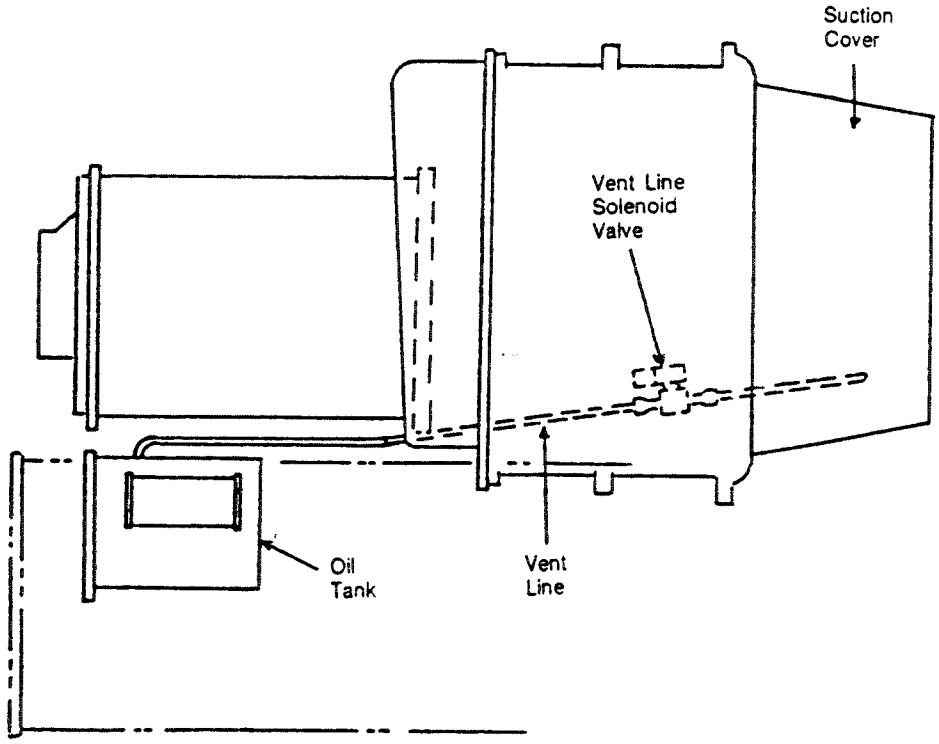

Parts Information:

This service bulletin is informational only and does not authorize any parts or labor. The parts listed below are required to complete the procedures described under "Corrective Action":

Obtain the parts listed below locally:
- 1-1/8" Copper Tubing (field supplied);
- (1) 90-Degree Elbow **(Mueller No. W2164)**; or,
- (1) Straight Adaptor **(Mueller No. W1164).**

Order the parts listed below from La Crosse, "Ship from 31", and specify the following part numbers:

VAL-3217 - ALCO Vent-Line Solenoid Valve;
TEE-0077 - Oil Eductor.

Other Service Bulletins Referencing Oil Loss:

CVHE-SB-20 - "CVHE Oil Pressure Loss During Startup".
CTV-SB-68 - "CenTraVac Oil Recovery System".

TRANE™

General Service Bulletin

CVHE-SB-27

Library	**Service Literature**
Product Section	**Refrigeration**
Product	**Centrifugal Liquid Chillers**
Model	**CVHE, CVHB**
Literature Type	**General Service Bulletin**
Sequence	**27**
Date	**May 29, 1992**
File No.	**SV-RF-CTV-CVHE-SB-27-592**
Supersedes	

Literature Changes:
CVHE-SB-27 (5/92) -- Original issue of bulletin.

Subject: CVHE/CHVB Free-Cooling K1 Relay Malfunction

Introduction:

A potential reliability problem has been identified with the K1 (free-cooling) relay located in the 1U1 module of all CVHE and CVHB units equipped with UCP695 micro-control panels and the free-cooling option. This bulletin provides details and instructions for corrective action to be taken if the contacts of relay K1 fail. The procedures presented in this bulletin should be performed only if this failure occurs.

Discussion:

A potential problem has been identified with free-cooling relay 1K1 on the 1U1D output module of the UCP. Refer to Figure 1. There have been occurrences where one of the normally-open contacts of 1K1 have welded closed. This has happened during free cooling valve actuator motor operation, but also may occur if a fluttering water flow switch causes the K1 contacts to chatter, since the relay cannot withstand the resultant arcing between the contacts.

Units Affected:

All CVHE and CVHB free-cooling units equipped with the UCP695 microprocessor control panel that do not have auxiliary free-cooling valve relay 1K18 in the panel are susceptible to this problem. The affected units were all manufactured prior to April 15, 1992.

Since the Trane Company has a policy of continuous product improvement, it reserves the right to change specifications and design without notice. The installation and servicing of the equipment referred to in this booklet should be done by qualified, experienced technicians.

Figure 1
Typical Free-Cooling Relay (1U1D) and Valve Actuator Wiring

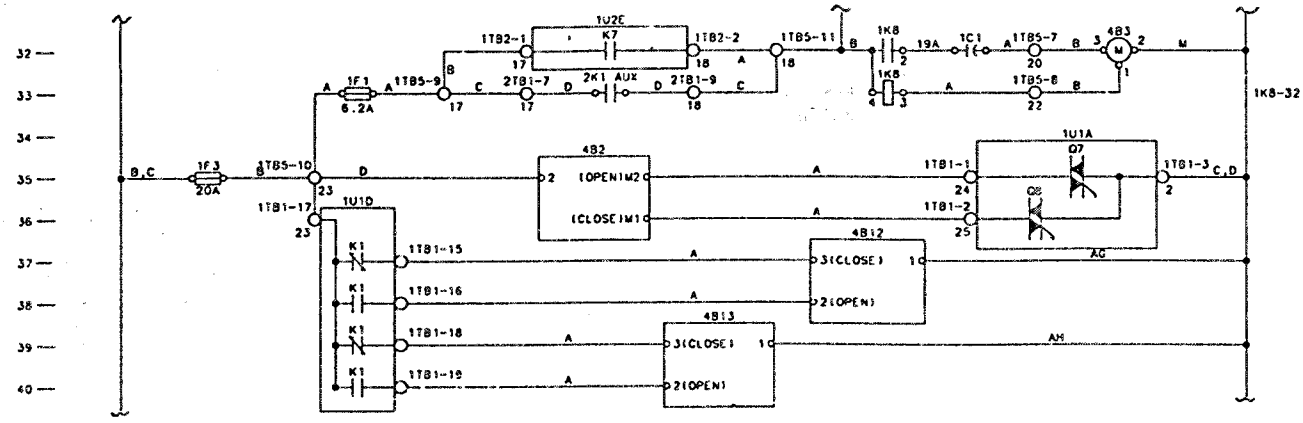

X39470561A

Current Production:

To alleviate this problem, a manufacturing change is being made for free cooling units to provide an additional relay (1K18) in the UCP, using heavier-duty contacts to drive the free-cooling valve actuator motors.

Corrective Action:

Any chiller that exhibits a history of K1 relay contact failures should be repaired. The repair consists of installing auxiliary free-cooling valve relay 1K18 in the UCP. The existing components of the 1U1 module do not change. The normally-open contacts of the K1 relay in the 1U1 module (between terminals 1TB1-16 and 1TB1-17) that are presently used to drive a free-cooling valve actuator motor, will be used to power the new relay (1K18). Refer to "1K18 Installation Procedure". The heavier-duty contacts of the new 1K18 relay will be used to drive the actuator motors.

Note: The diagrams illustrated in this bulletin are typical. Refer to the wiring diagrams that shipped with the chiller for specific information.

1K18 Installation Procedure

1. Mount the new 1K18 relay in the UCP at the location shown in Figure 2 using a 6-32 x .38 thread-forming screw. The relay location is the same as the hot gas bypass valve relay (1K15) location when the chiller is equipped with the hot gas bypass option. Use one of the mounting holes provided in the back of the panel.

WARNING! To prevent injury or death due to electrical shock, lock power supply disconnect open before opening UCP door. The terminals connected to remote equipment (e.g. condenser water pump) may remain energized even when power is removed from the panel. Always check for voltage before disconnecting wires!

 ©American Standard Inc. 1992

Figure 2
Installing 1K18 in UCP

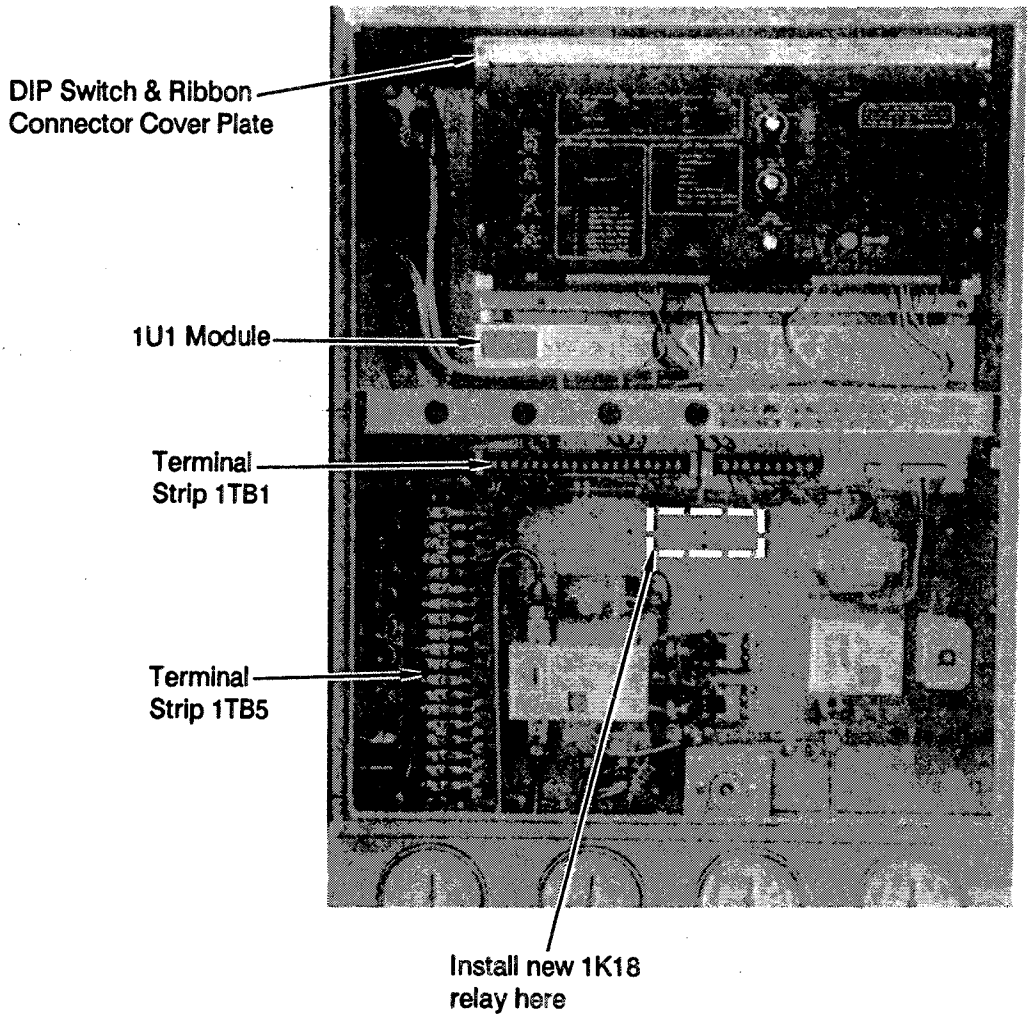

2. Disconnect the following wires from their corresponding 1U1 module terminals (refer to Figure 1):

Wire No.	Terminal No.
34A	- 1TB1-15
45A	- 1TB1-16
23C	- 1TB1-17
46A	- 1TB1-18
37A	- 1TB1-19

3. Check the condition of the K1 contacts in the 1U1D relay as follows:

With power off to the control panel, check continuity between terminals 1TB1-16 and 1TB1-17. If continuity exists between these terminals, replace the 1U1 module. Contact the CenTraVac Technical Service Department in La Crosse WI for information on obtaining a replacement 1U1 module (MOD0028).

WARNING! When servicing the machine, disconnect electrical power source to prevent injury or death due to electrical shock.

4. Check K1 relay operation as follows:

a. Remove the DIP switch and ribbon connector cover plate located across the top of the 1U3 module (Figure 2). Apply power to the control panel. Monitor DC voltage on terminals 1P3-9, -11 (Figure 3). Turn chiller switch to AUTO/LOCAL position. Switch free cooling switch to ON. DC voltage on 1P3-9, -11 should increase to between 0.85 and 1.6 volts.

Note: If voltage does not fall within this range, perform the "Power Supply Checkout Procedure" as described in the chiller service guide or in "CVHE-SB-22".

WARNING! Use extreme caution when performing checkout procedures with power on; carelessness can result in injury or death due to electrical shock.

b. Check continuity again between 1TB1-16, -17. With the free cooling switch in the ON position, there should now be continuity between 1TB1-16, -17. Operate the free cooling switch 2-3 times to ensure proper K1 relay operation. If the K1 relay operates properly, do not replace the 1U1 module.

WARNING! Use extreme caution when performing checkout procedures with power on; carelessness can result in injury or death due to electrical shock.

5. Disconnect power from the UCP. Referring to Figures 3 and 4, reconnect the wires in the UCP as shown in Table 1 below:

WARNING! When servicing the machine, disconnect electrical power source to prevent injury or death due to electrical shock.

Table 1
Wire Connection Points for Free-Cooling Relay 1K18 Installation

Wire No.	Connects From	Connects To
23C	1TB5-10	1TB1-17
23G (See Note)	1TB1-17	1K18-7
23H (See Note)	1K18-7	1K18-9
34A	4B12-3	1K18-1
37A	4B13-2	1K18-6
45A	4B12-2	1K18-4
46A	4B13-3	1K18-3
63A (See Note)	1TB1-16	1K18-A
2AN (See Note)	1K17-B	1K18-B

Note: New wires to be made up from #16 AWG red wire.

Figure 3
UCP Panel Wiring Connection Diagram After 1K18 Installation

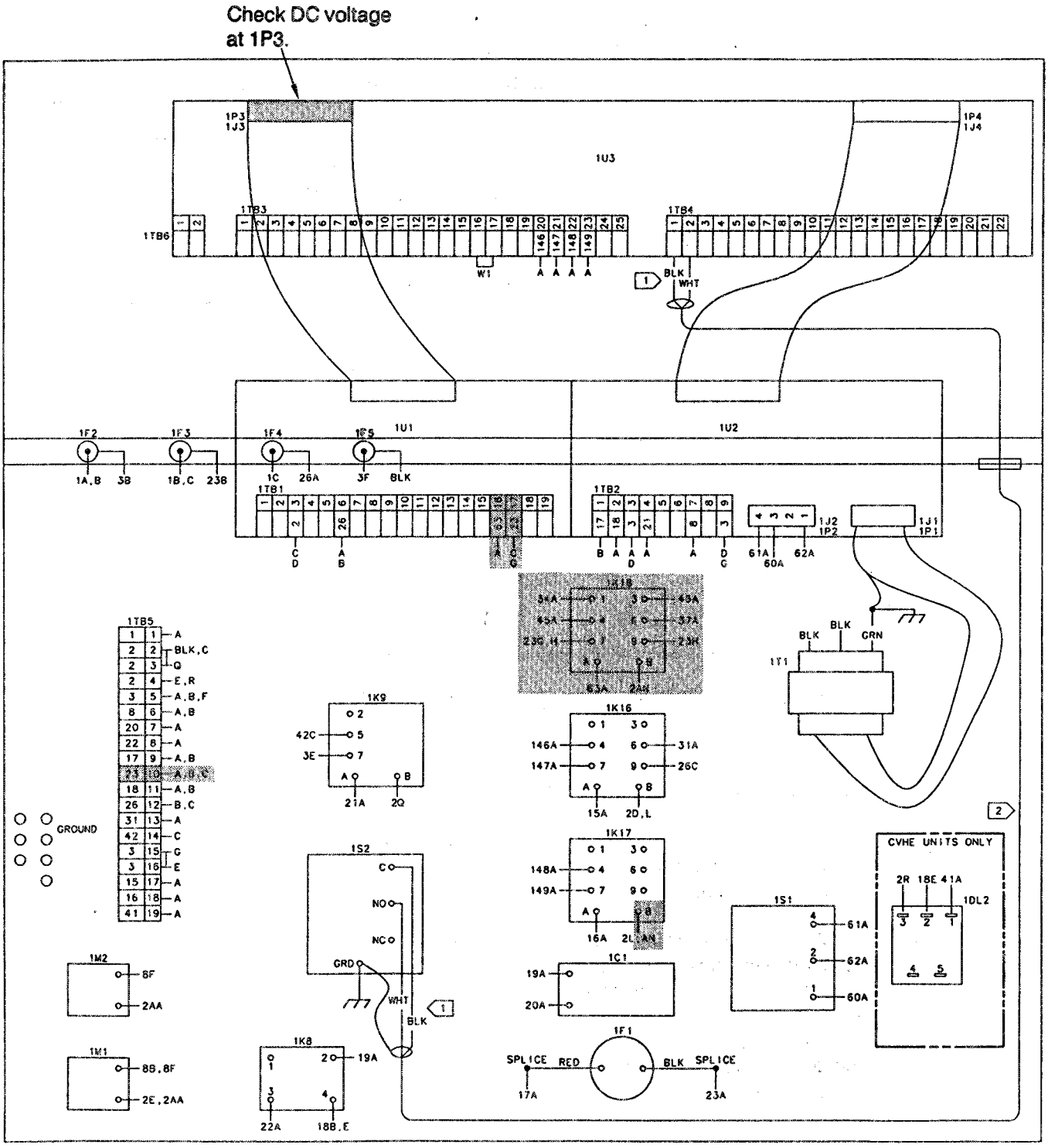

Figure 4
Free-Cooling Relay (1U1D) and Valve Actuator Wiring After 1K18 Installation

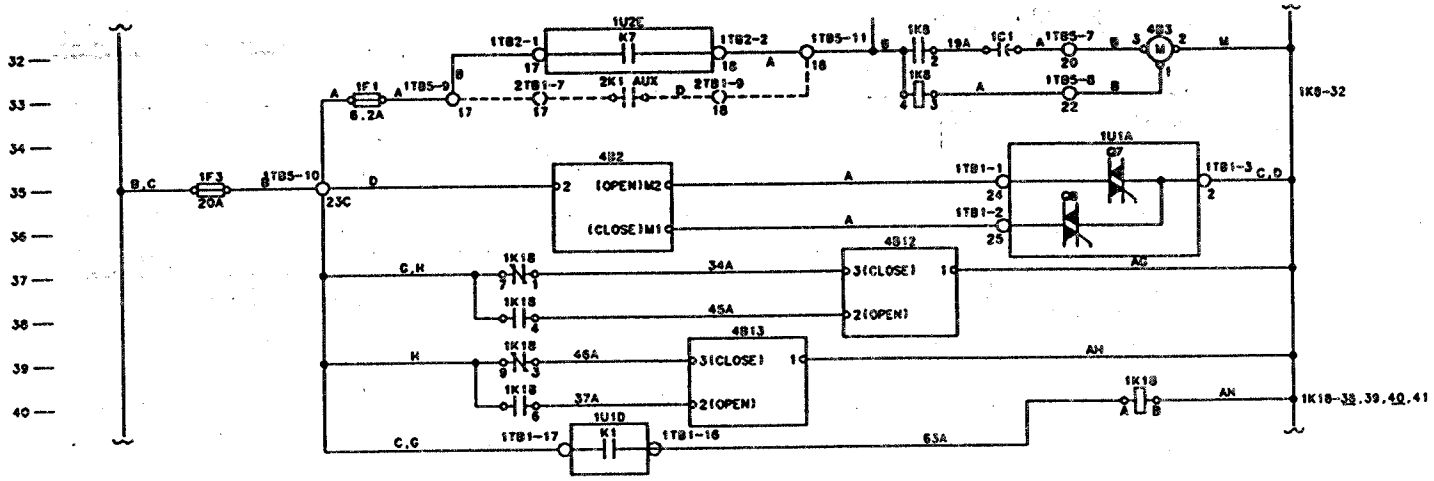

X39470577B

Parts Ordering Information:

The following parts should be ordered from an Trane Authorized Parts Center:

Qty.	Part Description	Part Number
(1)	Free-Cooling Auxiliary Relay 1K18	RLY1609

The additional parts listed below that are required to perform this procedure are to be obtained locally:

Qty.	Part Description	Part Number
(1)	6-32 x .38" thread-forming, round-head machine screw	----------
(8)	.187" x .020" push-on wire connectors; Amp type 640919-1 Faston receptacles for 16-14 ga. wire	----------
(1)	.250" x .032" push-on wire connectors; Amp type 640905-1 Faston receptacles for 16-14 ga. wire	----------

TH/RHS

TRANE

General Service Bulletin

CVHE-SB-28

Library	Service Literature
Product Section	Refrigeration
Product	Centrifugal Liquid Chiller
Model	CVHE
Literature Type	General Service Bulletin
Sequence	28
Date	November 8, 1992
File No.	SV-RF-CTV-CVHE-SB-28 11/92
Supercedes	

Literature Changes:
CVHE-SB-28 (11/8/92) - Original date of bulletin

Subject: CVHE Vent Line Solenoid Valve Malfunction (This is an informational service bulletin only)

Introduction:

We have received reports of malfunctioning vent line solenoid valves (Trane part no. VAL-3217) on some CVHE units. The purpose of this service bulletin is to discuss proper check-out of the solenoid valve before condemning it as defective.

Discussion:

The CVHE vent line solenoid valve (Figure 1) is a pilot operated valve and is normally open with the coil de-energized. It should be noted that a bleed hole (3/16" diameter) is provided in the valve body so that a metered gas flow is present even when the valve is closed during coil energization. To bench test the valve, the bleed hole is plugged and air pressure is supplied to the valve inlet. The air should flow through the valve until the coil is energized, at which time a definite click should be heard and the air flow should cease. When the coil is de-energized, the air flow should resume through the valve.

Several vent line solenoid valves, minus the coil, were returned to La Crosse as defective. The complaint was that the valve would not close when the coil was energized. These valves were bench tested using a new 120 volt coil and were found to function normally. No binding or sticking was found.

Since the Trane Company has a policy of continuous product improvement, it reserves the right to change specifications and design without notice. The installation and servicing of the equipment referred to in this booklet should be done by qualified, experienced technicians.

Figure 1
CVHE Vent Line Solenoid Valve

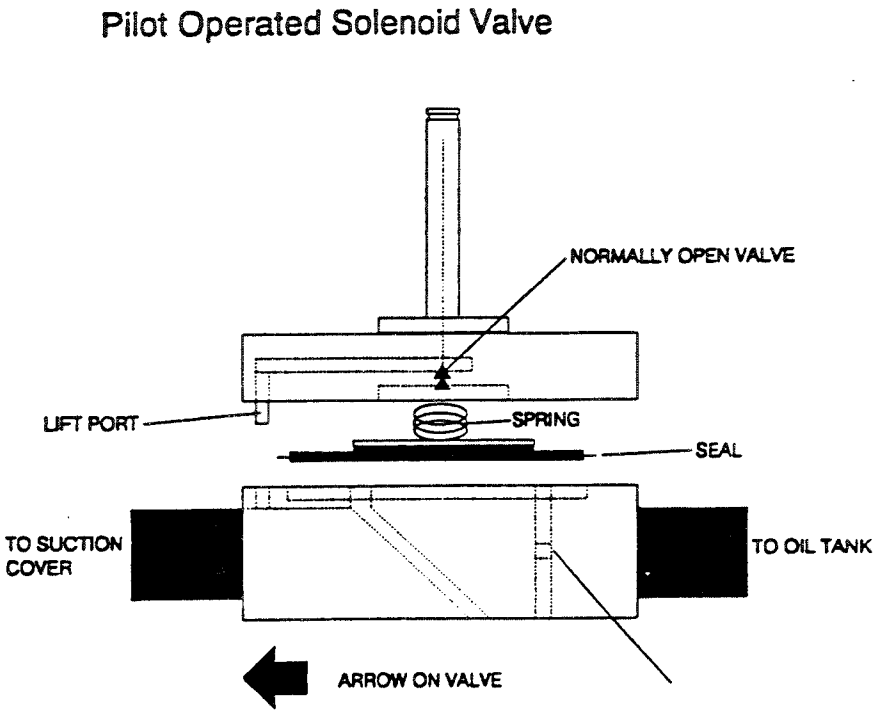

It is important to make sure the coil is functioning before condemning a valve as defective. This can be done with a simple test while the coil is mounted on the valve as follows: With the coil energized, place a small iron object, such as a screw driver blade, on top of the coil retaining cap. If a magnetic field is present, the coil is functioning. If no magnetic field can be detected, remove power from the coil and remove the coil from the valve. Place a screwdriver through the coil and energize the coil. A strong magnetic field should be felt. If no magnetic field is present, the coil is bad and must be replaced. Make sure the power provided to the coil is the same as the coil nameplate. Do not apply power to a solenoid coil when no plunger or armature is present as the coil will over-heat and burn out.

Units Affected

All CVHE Units are affected. If the coil functions properly but the valve will not work, replace the vent line solenoid valve with Trane Part No. VAL-3217 and return the defective valve, including the coil to:

The Trane Company
LBU Technical Service Dept.
3600 Pammel Creek Road
La Crosse, WI 54601
Attn: Mark Komarek

Parts Information:

This service bulletin is informational only and does not authorize any parts or labor. The parts listed above are required to complete the information under "Units Affected".

©American Standard Inc 1992

TRANE

General Service Bulletin

CVHE-SB-29

Library	Service Literature
Product Section	Refrigeration
Product	Centrifugal Liquid Chiller
Model	CVHE
Literature Type	General Service Bulletin
Sequence	29
Date	January 8, 1993
File No.	SV-RF-CTV-CVHE-SB-29 1/93
Supersedes	

Literature Changes:
CVHE-SB-29 (1/8/93) - Original date of bulletin

Subject: DRV5-1740 Louis Allis Motor Replacement on CVHE 035 through 050

Introduction

This service bulletin discusses an operational problem experienced by some replacement Louis Allis DRV5-1740 motors supplied by Trane ServiceFirst.

Discussion

The DRV5-1740 motor is nominally rated at 321 BHP and is used in CVHE 035 through CVHE 050. The original motor liquid feed line orifice is a number two with an inside diameter of .312 inches.

There have been occasions where a replacement motor has operated with end turn temperature in excess of the motor temperature control trip point of 265°F.

Investigation of the problem revealed an excessive pressure drop across the liquid feed line orifice which results in flashing and turbulence around the stator. This effectively reduces the flow of liquid through the liquid feed ports in the stator with resultant high end turn temperature.

Since the Trane Company has a policy of continuous product improvement, it reserves the right to change specifications and design without notice. The installation and servicing of the equipment referred to in this booklet should be done by qualified, experienced technicians.

Corrective Action

When a DRV5-1740 Louis Allis motor is replaced or is used as a replacement for a Reliance motor, replace the orifice with a number three or enlarge the number two orifice to a .390 inch diameter. The enlarged orifice will provide improved liquid refrigerant flow to the motor.

Units Affected

All CVHE 035 through CVHE 050 units are affected if a DRV5-1740 Louis Allis motor is replaced or is used as a placement for a Reliance motor.

Parts Information

This service bulletin is informational only and does not authorize any parts or labor.

RH

©American Standard Inc 1993

TRANE

Confidential Service Bulletin

CVHE-CSB-31

Library	**Service Literature**
Product Section	**Refrigeration**
Product	**Centrifugal Liquid Chillers**
Model	**CVHE**
Literature Type	**Confidential Service Bulletin**
Sequence	**31**
Date	**November 11, 1994**
File No.	**SV-RF-CTV-CVHE-CSB-31-1194**
Supersedes	

Literature History:
CVHE-CSB-31 (11/94)–Original Issue of Bulletin.

Subject: Starter Line Side Fuses CVHE/CVHF UCP2 200-575 Volt Units - Fix-On-Fail

Introduction:

The purpose of this Confidential Service Bulletin is to provide information on Line Side Fuses (2F1, 2F2 and 2F3) that may fail. This is a fix on fail bulletin and not mandatory.

We have experienced some situations on the CVHE and CVHF 200-575 Volt Units where one or more of the starter line side fuses have failed at powerup. The fuse failure occurs after the disconnect to the unit is closed and the fuse fails to handle the inrush current of the 2T5 3KVA control power transformer.

Discussion:

The fuse that we have been using is a Littelfuse Type Fuse, as detailed in Service Alert No. 144 and No. 145. If you have a unit that has experienced a Littelfuse failure at powerup, you may order and install a new kit. The kit contains a new larger fuse block, fuses and instructions to replace the smaller fuses. Production changes are in process.

Labor Authorization:

This service bulletin authorizes 1.0 man-hours per unit on affected units. No travel authorized. All claims must be submitted on the "Service Warranty Sales Allowance Claim" (Form No. 1-30-09-2) within 30 days of the repair. Any exceptions to the guidelines established in this service bulletin must be authorized by the Centrifugal Technical Service department.

Since the Trane Company has a policy of continuous product improvement, it reserves the right to change specifications and design without notice. The installation and servicing of the equipment referred to in this booklet should be done by qualified, experienced technicians.

Material Authorization:

This service bulletin authorizes one kit per unit at no charge. The appropriate kit can be ordered from Cutler Hammer per the following address or you may telephone or fax the order.

	Kit Number	Cutler-Hammer
200/208 Volt	2A92583G02	Attn: Gene Weinand
380/415 Volt	2A92583G03	4201 N. 27th Street
460/480 Volt	2A92583G04	Milwaukee, Wisconsin 53216
575/600 Volt	2A92583G05	Telephone: (414)-449-6801 (Fax: (414)-449-7093

Corrective Action:

Installation instructions are in the kit. Remove the Littelfuse and install the new larger fuse block and fuses. The fuse block comes with a bracket that will attach to the 3KVA transformer in the starter.

Material Disposition:

The material does not require return to headquarters and can be scrapped in the field.

Expiration date:

The effective cut-off date of this bulletin is July 31, 1995. All claims must be submitted no later than August 31, 1995.

© American Standard Inc. 1994

TRANE

General Service Bulletin

CVHE-SB-32

Library	**Service Literature**
Product Section	**Refrigeration**
Product	**Centrifugal Liquid Chillers**
Model	**CVHE/F/G**
Literature Type	**General Service Bulletin**
Sequence	**32**
Date	**August 1, 1995**
File No.	**SV-RF-CTV-CVHE-SB-32-895**
Supersedes:	**New**

Literature History:
CVHE-SB-32 (8/95)--Original Issue of Bulletin.

Subject:

Troubleshooting and Checkout Procedures For CVHE/F/G Units with UCP2 Controls

Introduction:

The purpose of this service bulletin is to provide troubleshooting information on CVHE/F/G Centrifugal Chillers with UCP2 Control Panel. Additional UCP2 information is found in the following manuals:

CVHE-M-7, Operation/Maintenance Manual
CVHE-IN-8, Installation Manual
CVHE-W-8, Wiring Manual
CVHE-CLD-1, Clear Language Display Manual

Since the Trane Company has a policy of continuous product improvement, it reserves the right to change specifications and design without notice. The installation and servicing of the equipment referred to in this booklet should be done by qualified, experienced technicians.

Table of Contents

Subject:	Page:
1. General Troubleshooting Index	**2a-2b**
2. UCP2 Control Panel And Module Description	**3-5**
Figure 1: UCP2 Control Panel	*3*
3. General Troubleshooting Information	**6-18**
4. Module Compatibility	**19**
5. Description Of UCP2 Options	**20-21**
6. Module Voltages	**22-28**
Figure 2: Chiller Module	*22*
Figure 3: Circuit Module	*23*
Figure 4: Input Module	*24*
Figure 5: Options Module	*25*
Figure 6: Purge Module	*26*
Figure 7: Starter Module	*27*
Figure 8: Stepper Module	*28*
7. Module Dip Switch Settings	**29**
8. Diagnosing A Non-working Stepper Module	**30-36**
Table 1: Stepper Module Test Point Voltage Limits	*31*
Table 2: Stepper Module Troubleshooting	*31-33*
Table 3: Motor Winding Resistance	*34*
Table 4: Stepper Motor Connections	*35*
Table 5: Motor Voltages with Actuator	*35*
Table 6: Motor Voltages with Actuator Moving	*35*
9. Module Set-up Procedures For:	**36**
External Current Limit Setpoint	**36**
Refrigerant Monitor Input	**37**
Load Indication Output	**37**
External Chilled Water Setpoint	**38**
10 Analog Input Table Abbreviations	**39**
11. Temperature Sensor, Voltage And Resistance Tables	**40-57**
Table 7: Pressure vs Voltage for Oil Pressures	*40*
Table 8: Pressure vs Voltage for Water Pressure	*41-43*
Table 9: Purge Compressor Suction Valve	*44*
Table 10: Evap. Entering and Leaving Water Temp.	*45*
Table 11: Saturated Cond. Refrigerant Temp.	46-47
Table 12: Bearing Temp., Oil Temp. and Compressor Discharge Temp.	*48-50*
Table 13: Auxiliary HR Ent. and Condenser Ent. and Leaving Water Temp.	51-53
Table 14: Outdoor Air Temp.	*54*
Table 15: Saturated Evap. Refrigerant Temp.	*55-56*
Table 16: Compressor Motor Winding Temp	*57*
12. Transducer Checkout Procedure	**58**
13. Starter Contactor Sequence	**59**
14. Starter Module CT Voltage and Currents	**60**
Table 19: Starter Module CT Voltage and Currents	*60*

General Troubleshooting Index

Problem Description	No.	Page
Approach Temperature reads -40°F.	1	6
Auto X-former Starter: Runs (3) seconds and trips. Unit will not transition.	2	6
Bearing Temperatures 1 and 2 Locations.	3	6
Capacity Limited by High Current when the phase current as read from the Compressor report reads zero amps. Getting this message during the run mode.	4	6
Chiller Loss of Communication with Circuit module and IGV overdriving close.	5	6
Check Clock (IFW) Informational Warning Diagnostics. On a loss of power the clock does not keep time, if there is an extended power loss (greater than 15 seconds).	6	6
Chiller Loss of Communication with Purge and the IGV calibrates	7	7
Circuit Loss of Communication with Starter or Circuit Loss of Communication with Chiller Diagnostics	8	7
Clear Language Display won't go into Demo mode.	9	7
Communication diagnostic; none or degraded communications.	10	7
Loss of Communication with Starter Diagnostics at Start-up with no Inlet Guide Vane action. Mode is "Resetting" and can move through the menus.	11	7
Loss of Communications or Intermittent Communication between the Tracer and the UCMs.	12	8
No Communication, on a power up, get message "No Communication, Data Not Valid" and no action in the IGV.	13	9
No Communication, on a power up, get message "No Communication, Data Not Valid" but the Inlet Guide Vane calibrates.	14	9
Starter Loss of Communication with Chiller. No other diagnostic.	15	9
TCI Loss of Communication with Chiller.	16	9
Cond. Pressure 2-10 VDC output will not work.	17	10
Cond. Refrig. Temp. Sensor diagnostic, when the displayed Cond. Refrig. Temp is reading fine.	18	10
Condenser and Evaporator entering and leaving water temps. changing rapidly and reading incorrectly, i.e. -25°F to 90°F.	19	10
Condenser Water Flow lost diagnostic. Unit will not restart until manually reset.	20	10
Custom menu - Unwanted items that you did not install and you cannot remove.	21	10
Display is locked up. No communication, Data Not Valid Diagnostic.	22	10
Display on the CLD is flashing.	23	11
External Chilled Water Setpoint does not work.	24	11
Evaporator Water Temperatures are reversed. 2 pass units only.	25	11
2F1, 2F2 and 2F3 Fuses blow - On 200-575 volt units when switching the starter disconnect from OPEN to CLOSED.	26	11

General Troubleshooting Index

Problem Description	No.	Page
Hot Gas Bypass does not work.	27	12
IGV will not move in the Service Test Manual mode.	28	12
IPC Buffer Diagnostics	29	12
KW reads high by a factor of 3, with optional PT installed.	30	12
Loading Problems	31	13
Momentary Power Loss	32	13
Motor winding temperatures changing rapidly and randomly.	33	13
Differential Oil Pressure Calibration Diagnostic following post lube. Secondary problem may be the oil pump will not shut off after post lube.	34	14
Differential Oil Pressure Overdue Diagnostic immediately following a Remote Reset.	35	14
Oil Pump Discharge Pressure Sensor Diagnostic and Oil Pressure Calibration.	36	14
Over/Under Voltage Diagnostic on Startup.	37	14
Phase Loss	38	14
Phase Reversal	39	15
Printer will not work.	40	15
Purge Compressor will not run in the manual "ON" mode.	41	15
Transition resistors stay in too long.	42	16
Setpoints are not being stored, service tests will not work and we are calling many diagnostics on the CLD.	43	16
Starter Contactor Interrupt Failure Diagnostic when powering up the UCP.	44	16
Starter Dry Run Test Diagnostic upon entering a Starter Dry Run Test.	45	16
Starter Dry Run will not work.	46	16
Stepper motor is humming.	47	17
Pressure Transducer shift in calibration. Diagnostics will be sensor calibration related such as sensor failure or oil pressure sensor calibration.	48	17
Rapid Time of Day Scrolling or Date jumps back one day.	49	17
Unit did not Transition diagnostics.	50	17
Unit Tons Read-out on CLD does not work	51	18
High Vacuum Lockout. The UCP2 looks at the oil tank pressure via the oil tank pressure transducers. On R-123 units, if the pressure is -11.6 PSIG (3.1 PSIA) or greater, we get the high vacuum lockout. On R-11 units it is -10.9 (3.8 PSIA).	52	18

UCP2 Control Panel and Module Description

Unit Control Panel

Safety and operating controls are housed in the UCP2 Unit Control Panel, the Starter Panel and the Purge Control Panel (Control Panel layout is illustrated in Figure 1).

The UCP2 control consists of a modular design partitioned by major function or group of functions. All modules communicate with each other through the IPC circuit.

Major components within each of these control groups are described below.

Unit-mounted temperature sensors, pressure transducers and functional switches provide analog and binary inputs to the various modules.

The "microprocesser-based" modules are described as below: All wiring to the modules is to pluggable terminal blocks.

Figure 1
UCP2 Control Panel

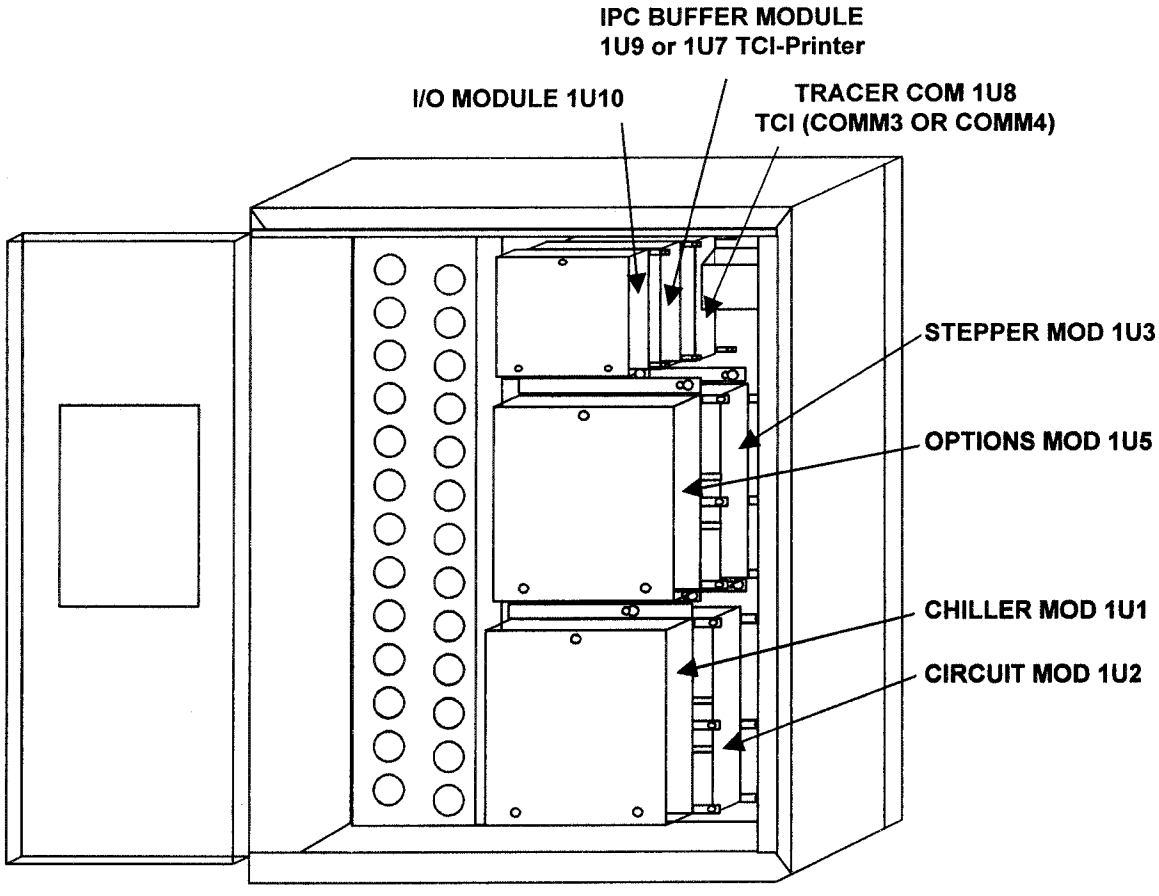

UCP2 Control Panel and Module Description

Chiller Module

The Chiller Module is the Master-of-the-Chiller communicating commands to other modules and collecting data/status/diagnostic information from other modules over the IPC (Inter Processor Communications Link). The Chiller Module performs the leaving chilled water temperature and limit control algorithms arbitrating capacity against any operating limit the chiller may find itself working against. The Chiller Module checks for valid setpoints and contains non-volatile memory (NOVRAM), to retain them on any power loss. Inputs and Outputs are chilled water system level such as, but not limited to, evaporator and condenser water temperatures, evaporator and condenser water pump control, status and alarm relays, and external auto/stop.

Circuit Module

The Circuit Module serves as an input/output expander and is assigned inputs and outputs associated with the refrigerant and lubrication circuits. The Circuit Module also receives a 4-20mA signal from an external refrigerant level monitoring device. UCP2 then converts the signal to ppm for display at the Clear Language Display.

Stepper Module

The Stepper Module is designed to drive the stepper motor inlet guide vane actuator on CenTraVac chillers. On CenTraVac chillers the Stepper Module receives from the Chiller Module the direction and distance to drive the inlet guide vanes and then generates the appropriate signals to operate the stepper motor. The Stepper Module also has other I/O capabilities used to support functions on the stepper module and/or just I/O expansion. These are Evap. temperature, Cond. discharge, Bearing temperature and Cond. temperature.

Starter Module

The Starter Module physically resides in the Compressor Motor Starter Panel providing control of the starter when starting, running and stopping the motor. The Starter Module provides interface to and control of Y-Delta, X-Line, P-Reactor, A-Transformers, Solid State Starters and Trane® Adaptive Frequency Drive. The Starter Module also provides protection to both the motor and the compressor in the form of running overload, phase reversal, phase loss, phase unbalance, momentary power loss, and compressor surge, in addition to others.

Purge Module

The Purge Module provides control of the purge used on R11 and R123 low pressure CenTraVac models. The Purge Module provides all the inputs and outputs to control the purge optimizing both purge and chiller efficiency. The Purge Module resides in the purge control panel and communicates with the Chiller Module over the IPC (Inter processor Communications Link) uploading set points and downloading data and diagnostics.

Local Clear Language Display

The Local CLD (Clear Language Display) resides at the Chiller providing a display of chiller data and access to operator/serviceman controls, set points and chiller setup information. All information is stored in non-volatile memory in the Chiller Module. The Local Clear Language Display and the Chiller Module work together to display and store information requiring non-volatility.

Remote Clear Language Display Panel and Remote Clear Language Display Interface Module

As an option, the Remote Clear Language Display permits the operator to remotely operate 1-4 chillers. The Remote Clear Language Display Panel works like the Local Clear Language Display with two exceptions, (1) a Local Stop command takes precedence over all other remote or external devices, and (2) the Remote Clear Language Display's Custom Report and display language are independent of the Local Clear Language Display Panel.

UCP2 Control Panel and Module Description

Options Module

The Options Module satisfies control or interface requirements for a number of options. Some of these options are stand alone, such as Generic BAS Interface; other options support either additions or modifications to the chiller itself, such as Free Cooling. Features supported by the Options Module include Ice-Making, Heat Recovery, External Chilled Water Setpoint, and External Current Limit Setpoint.

Tracer Communications Interface

TCI COMM 3 is an optional module that provides a 1200 baud bi-directional serial communications link to Tracer 100/100i/CPM/Monitor BAS panels.

TCI COMM 4 (Tracer Summit) is an optional module that is also now available.

Printer Interface Module

The Printer Interface module provides a pre-formatted chiller log to a printer. The Printer Interface can be programmed via the Clear Language Display to print a chiller log on command, at the time of a diagnostic, and/or on a periodic basis. Each printed event is time and date stamped.

The preferred printer to be used is **OKIDATA Microline 184 Turbo**. It has been assigned a Trane number of 4150 2066.

Secondary Printer Options

Epson: Not all Epson printers support serial communications. For a low cost printer that does support serial communications, Epson recommends the LX810 Printer with the Serial interface option (C823032).

IBM ProPrinters: Use either the "2380" + or the "2390+" along with the Serial interface option "1363110".

Other: Any printer/computer with 232 capabilities should be capable interfacing with the TCI Printer module (allowing for different cables and jumper configurations).

General Troubleshooting Information

Problem 1. *Approach Temperature reads -40°F*

Corrective Action:

A CLD X13650448-04 or newer is required with a chiller module X13650450-04 or newer.

Problem 2. *Auto X-former starter: Runs (3) seconds and trips. Unit will not transition.*

Corrective Action:

Verify Starter Module. If -07 or later, it requires transition circuit.
No voltage on transition complete J4 circuit. Trace circuit path. Reference CVHE-SB-36.

Problem 3. *Bearing Temperatures 1 and 2 Locations.*

Corrective Action:

- Bearing temperature 1 (Stepper module J5-5, 6) goes to the front Journal bearing.
- Bearing temperature 2 (Stepper module J5-7, 8) goes to the rear Thrust bearing.

Problem 4. *Capacity Limited by High Current when the phase current as read from the Compressor report reads zero amps. Getting this message during the run mode.*

Note: This is what is happening: The Chiller module takes the three phase currents as sent by the Starter module, selects the highest one and limits based on this.

Corrective Action:

- Check the phase currents as displayed in the Compressor Report.
- Check the Active Current Limit Setpoint. It is possible it is a very low value or even zero amps is loaded in.
- If the current limit source is the external current limit setpoint, check this input on the Options module.

Problem 5. *Chiller Loss of Communication with Circuit module and IGV overdriving close.*

Corrective Action:

- IPC to Circuit module disconnected or reversed.
- Circuit module not powered
- Verify that a good ground exists between all modules including the CLD that needs a dedicated green wire ground.

Problem 6. *Check Clock (IFW) Informational Warning Diagnostics. On a loss of power the clock does not keep time, if there is an extended power loss (greater than 15 seconds).*

Corrective Action:

- This diagnostic is shown in active diagnostic menu.
  Note: If you clear this IFW diagnostic while the machine is running, you will shut down the unit. Wait to clear the diagnostic when the unit is off.

General Troubleshooting Information

Problem 7. *Chiller Loss of Communication with Purge and the IGV calibrates.*

Corrective Action:

- IPC to Starter module disconnected or reversed.
- Starter module not powered up
- Verify that a good ground exists between all modules including the CLD that needs a dedicated green wire ground.

Problem 8. *Circuit Loss of Communication with Starter or Circuit Loss of Communication with Chiller Diagnostics*

Corrective Action:

- The 120 VAC side of the 3KVA transformer should be grounded at only one spot and it is in the Starter. Both the 120 VAC and the 24 VAC in the UCP should not be grounded.
- Verify the IPC wire is shielded twisted pair between the Starter and Chiller module and its shield is grounded at the J1-6.
- Verify there is a dedicated ground between the remote starter and the chiller.
- Verify that a good ground exists between all modules including the CLD that needs a dedicated green wire ground.

Problem 9. *Clear Language Display won't go into Demo mode.*

Corrective Action:

You must press Custom report and Compressor report at the same time while the display is showing software part number on power-up. If it still does not go into the Demo Mode, check the IPC communication.

Problem 10. *Communication diagnostic; none or degraded communications.*

Corrective Action:

- Starter module must have the A phase on pin 2 of J2 24 vac
- IPC wires must be connected
- IPC wires must have correct (+ -) polarity on J1.
- The TCI and CLD modules have LEDs to indicate the sending and receiving of chiller packets.
- On TCI Green (RxA) is receive and should be blinking constantly. Red (TxA) is send and blinks every 1-2 seconds.

Problem 11. *Loss of Communication with Starter Diagnostics at Startup with no Inlet Guide Vane action. Mode is "Resetting" and can move through the menus.*

Corrective Action:

- IPC to Starter module disconnected or reversed
- Starter module not powered up.
- Verify that a good ground exists between all modules including the CLD that needs a dedicated green wire ground

General Troubleshooting Information

Problem 12. *Loss of Communication or Intermittent Communication between the Tracer and the UCMs. (If the TCI loses communication with the Tracer for 15 continuous minutes then you will get the "Tracer Communications Lost" message).*

Corrective Action:

- Verify that a TCI COM 3 is installed.
- Verify the Chiller and CLD versions are compatible with Tracer. Reference CTV-CSB-90 and CTV-CSB-92.
- ICS address at CLD should match with Tracer
- Are the DIP switches set correctly. They should be all off for COM 3.
- In the Tracer Module, verify the IPC LEDs near J1 are blinking. Red LED is transmit and should be blinking constantly showing lots of IPC action (even if not for the TCI). The green LED is for receive and should only be blinking rapidly in a row once every 1-2 seconds which is the IPC cycle time.
- Verify the COM 3 LEDs near J3 are blinking. Red LED is transmit and should be blinking showing lots of COM 3 action (even if not for the TCI). The green LED is for receive and should only be blinking rapidly in a row once every minute which is the Tracer cycle time.
- The Starter module or other modules are not grounded well. The IPC needs the modules to be grounded together.
- Go to service test menu and verify that Chiller thinks a TCI 4 is installed.
- Look at the voltage of each line with respect to ground. A logic 0 should be .5 V or less, a logic 1 should be 4.5 volts or more.
- For COM 3 lines less that 1000 Ft., a 300 Ohm terminating resistor put across the two wires is needed. Install the resistor first at the chiller end of the link.
- Radio frequencies generated from sources like airplanes and TV/radio towers may be inducing noise in the communication lines. Tie matched capacitors of around 200pF at either ends or both ends from each line to ground.
- TCI option is self installed. No need to enable it manually. If you do enable it manually and no TCI Tracer module on the line, then a loss of communication with TCI will be called. If installing TCI option, then IPC side diagnostics are called i.e. Loss of Communication with TCI. No Tracer diagnostics are called.
- De-install TCI option and power up and see it self install within 10 seconds. If not, something is wrong in TCI module.
- De-install Tracer option and power up and see if it self installs within three minutes. If not, something is wrong with the Tracer side.
- Tracer option is self installed. No need to enable it manually. If enabled manually and no Tracer on the communication line, then a Loss of Communication with Tracer will be called. If a Tracer is put on communication line, then communication side diagnostics are called Loss of Communication with Tracer.

General Troubleshooting Information

Problem 13. *No Communication, on a power up, get message "No Communication, Data Not Valid" and no action in the IGV.*

Corrective Action:

- Chiller module not powered up
- IPC to Chiller module not connected
- IPC shorted
- Disconnect all modules from the IPC to CLD except the Chiller module. If a communication is received back, then try plugging one of the other modules one at a time, do a power up and if it then fails, this is the module that is pulling down the line.
- Check the LEDs at the rear of the CLD. The left one is "TEST" and should be on if all is normal.
- The second LED from the left is the "+5VDC" and should be on all the time if all is normal.
- The third LED from the left is the transmit and should only blink rapidly every 2 seconds when the CLD talks on the line.
- The fourth LED from the left is the receive and should be blinking rapidly all the time since there is constant buss action.
- Verify that the CLD is grounded to the other modules.
- Module Grounding Problem. On the Starter module DO NOT ground the IPC. IPC is grounded at the Chiller module.

Problem 14. *No Communication, on a power up, get message "No Communication, Data Not Valid" but the Inlet Guide Vane calibrates.*

Corrective Action:

- IPC to the Local Clear Language Display reversed
- IPC to Local Clear Language Displaydisconnected
- Verify that a good ground exists between all modules including the CLD which needs a dedicated green wire ground.

Problem 15. *Starter Loss of Communication with Chiller. No other diagnostic.*

Corrective Action:

- Verify IPC connections are good to Starter module and cable is shielded. Chiller module X13650450-01 is not compatible with Starter module X13650453-02 and later. X13650453-02 and later request chiller packet 20. Chiller module X13650450-01 does not support packet 20. All later Chiller modules do.

Problem 16. *TCI Loss of Communication with Chiller.*

Corrective Action:

Need a X13650460-02 or newer TCI module.

General Troubleshooting Information

Problem 17. *Cond. Pressure 2-10 VDC output will not work.*

Corrective Action:

The Chiller module must be a X13650450-04 or later. Earlier versions did not support this option.
Check wiring between transducer (located near the purge) and the circuit module J7.
Faulty transducer - follow transducer checkout procedure on page 58.

Problem 18. *Cond. Refrig. Temp. Sensor diagnostic, when the displayed Cond. Refrig. Temp. is reading fine.*

Corrective Action:

Chiller software found in X13650450-01 Rev. D or earlier mis-diagnose Cond. Refrig. Press.
Replace with new Chiller module.

Problem 19. *Condenser and Evaporator entering and leaving water temps. changing rapidly and reading incorrectly, i.e. -25° F to 90° F.*

Corrective Action:

Bad Chiller module, it must be replaced.

Problem 20. *Condenser Water Flow lost diagnostic. Unit will not restart until manually reset.*

Corrective Action:

Phase A and B Chiller module software were actually an MMR. Phase C (X13650450-04) changed to a MAR. Time changed from 3 minutes to 4-1/4 minutes.

Problem 21. *Custom menu - Unwanted items that you did not install and you cannot remove.*

Corrective Action:

- The initial problem was if you had installed an option, put it in the Custom menu, then de-installed it without first removing it from the Custom menu.
- Problem corrected on CLD X13650448-02, Rev. E.

Problem 22. *Display is locked up. No communication, Data Not Valid Diagnostic.*

Corrective Action:

1. Check the (4) LEDs on the back of the CLD. Left to right.
   - #1 is the Test Light and should be on all the time.
   - #2 is the 5VDC and should be on all the time.
   - #3 is the Transmit and should blink every 2 seconds.
   - #4 is the Receive and should blink continuously.
2. There probably is a IPC communication problem with one of the boards. Disconnect the IPC from all modules except leave the IPC connected from the CLD to Chiller module. Start connecting the IPC at one at a time until we find which one is the problem.
3. Check the Chiller module 24 VDC, 5 VDC and 24 VAC.
4. Check the CLD (Clear Language Display) grounding. It has to be grounded from the clear language display to the chassis/back panel.
5. Starter Module IPC should not be grounded. Ground is on the Chiller module end. A double ground will lock up the display.

Problem 23. *Display on the CLD is flashing.*

Corrective Action:

- The inductor in the switching power supply may be shorted to its core. The switch is going in and out of thermal shut down.
- The +5V LED should also be flashing.
- Verify the 24 VAC delivered to the CLD is within range of 20-28 VAC. Disconnect the IPC to verify it is not causing this.

Problem 24. *External Chilled Water Setpoint does not work.*

Corrective Action:

1. Polarity must be (minus) (plus)
2. If the 4-20 MA and the 2-10 VDC are out of range, the active chilled water setpoint source reverts back to front panel and does not work.
3. Setpoints
   - SW3-1 should be:
     OFF for 2-10 VDC
     ON for 4-20 MA
   - Chilled Water Reset type is Disabled
   - Chilled Water Setpoint source is External
   - Setpoint source override is None.
   - External Chilled Water Setpoint is Install.

Problem 25. *Evaporator Water Temperatures are reversed. 2 pass units only.*

Corrective Action:

Reverse the sensor leads at the module.

Problem 26. *2F1, 2F2 and 2F3 Fuses blow - On 200-575 volt units when switching the starter disconnect from OPEN to CLOSED.*

Corrective Action:

See manual CVHE-CSB-31.

Problem 27. *Hot Gas Bypass Does Not Work.*

Corrective Action:

1. Module Compatibility:
   Chiller must be X13650450-04 or newer
   CLD module must be X13650448-05 or newer
   Option module is a X13650452-01 or newer.
2. Hot Gas Bypass Option must be installed in the machine configuration
3. Hot Gas Valve Control in the service test menu must be in the Auto Mode.
4. Hot Gas Bypass Control enabled in field startup
5. The Inlet Guide Vane must be closed or at a minimum to go into Hot Gas.
6. The Chilled Water Setpoint minus the actual chilled water temperature must be 0.6 F or greater, i.e., Setpoint of 45° F and leaving temperature of 44° F for more than 20 seconds would show the need for Hot Gas.
7. Verify the Hot Gas Timer is installed and max HGBP time is greater than zero.
8. Verify that the module software numbers are being displayed in the Service Test Menu.
9. Verify that the IPC Communications wire is connected to J1 of all modules and we have good 24 VAC, 24 VDC and 5VDC.

Problem 28. *IGV will not move in the Service Test Manual mode.*

Corrective Action:

1. Verify the CLD LED comes on solid. Verify there are no Stepper module diagnostics.
2. Verify we are in a Stop mode, Diagnostic Stop mode, or Run mode.
   All other modes the Manual Vane Control will not work.
3. Is the IGV travel percentage increasing? If so there is a problem with the motor or Stepper Module drive circuit.
4. Are we in a "Stop" mode after being in a Limit mode. The limit bit may be set so do a power down to clear.
5. Will not work in post lube or initialization in preparing to start.
6. On power up, does the Stepper module do a BPI search. If not, the Stepper module could be held up in the Initialize mode internally. On a power up, the Stepper module looks for communication with the Chiller, Starter and Circuit modules. If it doesn't hear from any one of them, it stays in the Initialize mode and will not do BPI or Manual Vane Control. If no BPI, check the IPC wiring. Also, if trying to start the chiller, the mode will stay in initialize.

Problem 29. *IPC Buffer Diagnostics*

Corrective Action:

Clear Language Display is not communicating. Replace the CLD or the Chiller module is not communicating and needs replacing.

Problem 30. *KW reads high by a factor of 3, with optional PT installed.*

Corrective Action:

Software change made 11/93 to CLD. X13650448-02 Rev. E or later corrects the problem.

General Troubleshooting Information

Problem 31. *Loading Problems*

Corrective Action:

1. Unit is in External Stop and when released, requires 3.5 minutes to get the vanes to desired point of operation (typically 50 degrees). This is close to the maximum rate that the compressor can load because the fastest the vanes will move is 1250 steps every 5 seconds.
2. If Soft Load Control is Enabled, the Soft Control parameters can be adjusted to meet the requirements of the system. If the chiller is allowed to ramp up faster than needed it could over shoot the leaving chilled water temperature setpoint and potentially be current limited. If this overshoot is too rapid and causes excessive current draw, the adaptive control will force an unload to approximately 70 %. This could cycle several times before stabilizing.
3. If Soft Load Control is Disabled or the loading is not from initial startup, The LWT Control Proportional, Integral and Derivative gains can be adjusted to allow system adjustment to properly follow the load. Typical changes should be small. 1-2% proportional gain change or 0.01 % integral gain changes. Always adjust proportional gain first. This is the coarse adjustment, while integral is the fine and derivative is the micro adjustment.
4. Item 1 reference the mechanical limitation of the stepper motor while the software limitation is a pulldown rate of 5 F/minute of the leaving water temperature. This maximum cannot be overridden.

Problem 32. *Momentary Power Loss*

Corrective Action:

1. MPL is active for the Run mode. Not in the Start mode.
2. CT wiring on J5 of the Starter module must be wired White-Black per print and Phase A must be on Terminals 1 and 2, Phase B on 3 and 4 and Phase C on 5 and 6.
3. Check phasing of the supply voltage. The "A" phase must be delivered to J2-2 or 4 of the Starter module.
4. Look at the voltage on J2 for noise. J2 should be a smooth 24 VAC sign wave. If we get electrical noise from things such as inverters or high frequency generators, you will see noise blips off the sign wave.
5. Verify the polarity of the CT circuit is correct. For single CT circuits the White wire must be connected to J5-5 with the dot on the CT facing the line. For dual CTs. The "HI" polarity dot on the line CT must be facing the line, the Brown wire from the X13650266 transformer primary connected to X1 and the White wire from X13650266 secondary connected to J5-5.
6. Verify that there is voltage delivered to the J6 terminal, if not check the HPC circuit, circuit breaker or Starter Interlock.
7. Check for loose wires.
8. Check the wiring from J8 to 2K1 Coil and Auxiliary.
9. Two wiring errors will allow you to start and go out on Momentary Power Loss when the unit loads up. The CTs and 24 VAC may be wired up improperly. As the loading is changed due to vane movement, then MPL may be called.
10. If the unit trips on Momentary Power Loss, vanes stay where they were and then restarts without going through a Vane Closure or BPI search, (2) modules need to be changed:
    1. Chiller module needs to be a X13650451-04 or newer.
    2. Stepper module must be X13650455-04 or newer.

Problem 33. *Motor winding temperatures changing rapidly and randomly.*

Corrective Action:

Electrical noise problem in the circuit module. X13650451-04 Rev. D or later corrects the problem by adding a filtering circuit.

Problem 34. *Differential Oil Pressure Calibration Diagnostic following post lube. Secondary problem may be the oil pump will not shut off after post lube.*

Corrective Action:

1. Diagnostics is active in all non-running modes and the unit has been off for 5 minutes. The UCP2 calibrates the oil pressure sensors and if an error is found greater than 3 PSID a diagnostic is called out.
   (1.1) Sensors
   (1.2) Changing system pressures caused by such things as a pressure or changing water temperatures.
2. If the oil pump is running and will not shut off in post lube, the problem is a wiring error on the starter module. One or both of the following apply.
   (2.1) 115 VAC is connected to terminal J6-3 of the Starter module. Check to see if it was connected incorrectly to Terminal J3-1.
   (2.2) Terminal J8 on the Starter module. J8-1 (Wire #13) goes to the 2K1 Contactor. J8-2 (Wire #15) goes to 2K1 Auxiliary. Check to see if Wire #13 and Wire #15 are reversed.

Problem 35. *Differential Oil Pressure Overdue Diagnostic immediately following a Remote Reset.*

Corrective Action:

- The Circuit module was clearing the 3 minute oil pressure establish timer during a remote RESET. This would result in a Oil Pressure Overdue diagnostic.
- Exists for Circuit modules X13650451-06 and earlier.

Problem 36. *Oil Pump Discharge Pressure Sensor Diagnostic and Oil Pressure Calibration.*

Corrective Action:

Chiller is in a high vacuum where one or both of the transducers read -14.9 PSIG. This is out of range and thus a sensor diagnostic is being called. The diagnostic may be cleared once the chiller is charged.

Problem 37. *Over/Under Voltage Diagnostic on Startup.*

Corrective Action:

You may get the diagnostic with the following Setup Sequence.

1. Unit Line Voltage enabled in Machine Configuration.
2. Under/Over Voltage is enabled in Field Startup.
3. If you then disable Unit Line Voltage, the Under/Over Voltage screen disappears but is still active. You have to then re-enable Unit Line Voltage in Machine Configuration and disable Over/Under Voltage.
4. Over/Under Voltage is used only with PTs installed. If you enable the option with "No" PTs installed you will get the diagnostics.
5. When the Line Voltage Sensing Option is not installed, the Unit Line Voltage menu item is not displayed nor is the Under/Over Voltage option installed.

Problem 38. *Phase Loss*

Corrective Action:

1. CT hooked incorrectly relative to incoming power.
2. Defective Primary CT.
3. 120 VAC missing from the Stop Relay circuit on J6 of Starter module.
4. Defective High Pressure switch. Wire may be off.
5. Problem in the Start Relay circuit on J8 of Starter module. Check all connections and circuit.
6. Verify currents are over 10% RLA.

7. Check the Starter Wiring diagram for other components i.e., power monitoring devices that may be taking us off.
8. The Starter contactors may be too slow to respond to the Start signal. Disabling the phase rotation will give us more time by taking out the 0.7 highly aggressive circuit but keeping in the primary phase protection. For Starter software X13650453-04 Rev. K , the time for detection of the highly aggressive circuit changed from 0.3 to 0.7 seconds.

Problem 39. Phase Reversal

Corrective Action:

Phase Rotation Protection is based on clockwise ABC Phasing. UCP2 picks up current phasing through the Starter Module Terminal J5.

Three possible causes are:

1. Phases actually revised
2. Noise on the Link which may inject an illegal state
3. Current imbalance, higher impedance on (1) phase caused by:
   - Bad Contactor
   - All the lighting on (1) circuit/phase
4. (2) of the CT wires revised on J5.

Problem 40. *Printer will not work.*

Corrective Action:

1. Verify Printer is compatible with a serial 9 pin RS232.
2. Verify printer setup in the CLD is correct
   - Machine Configuration Menu:
     Printer Option is Installed
   - Service Settings Menu:
     Set Baud Rate, Parity, Data Bits, Stop Bits, Handshaking
     For Handshaking: XON/XOFF is recommended.
3. Verify the printer settings match the CLD setup
   - Baud Rate, Parity, Dat Bits, Stop Bits, and Handshaking must be the same as in the CLD
4. Verify the printer interface is working properly
   - Verify there is IPC communication
     - RxA (Green LED near J1) is IPC *receive* and should be blinking
     - TxA (Red LED near J1) is IPC *transmit* and should not be blinking
     - Diagnostic LED (Red) is OFF
     - Check DIP switches, they should be OFF-OFF-ON
   - RxB (Green LED near J3) is printer receive and should be OFF
   - TxB (Red LED near J3) is printer transmit and blinks only when printing
5. Check the printer cable
   - Usually a 9-25 pin cable with RX (receive) to Rx, and Tx (transmit) to Tx connections
6. Try to print manually (in Operator Settings menu)

Problem 41. *Purge Compressor will not run in the manual "ON" mode.*

Corrective Action:

1. In the Operator Setting menu, select "ON" for Purge Operating Mode. Note that "ON" means that the purge compressor and condenser fan will run. The pumpout motor will run only when the Purge Suction temperature gets below 17° F and turns off when the temperature gets above 25° F.
2. If you get "Purge Pumpout Rate Exceeded" message then go to the Service Settings menu, go to Field Startup Group and set "Purge Service Excessive Pumpout Outride Timer" to the amount of time you would like the pump-out motor to run without it incrementing the pumpout rate.
   The maximum allowed time is 72 hours. When this time is reached, you will get the "Max Pumpout Rate Exceeded" message.
3. Clear all purge diagnostics.

General Troubleshooting Information

Problem 42. *Transition resistors stay in too long.*

Corrective Action:

- If the J8 terminal on the Starter module is loose, the control does not latch in and extends the timing keeping the resistors in longer.
- Reference Service Bulletin CVHE-CSB-35.

Problem 43. *Setpoints are not being stored, service tests will not work and we are calling many diagnostics on the CLD.*

Corrective Action:

- IPC to Starter module disconnected or reversed.
- Starter module not powered up.
- One wire of the IPC is not connected.

Problem 44. *Starter Contactor Interrupt Failure Diagnostic when powering up the UCP.*

Corrective Action:

1. Starter module is sensing motor current greater than 10% RLA when motor should be OFF on a power up or in OFF state.
2. Starter module is sensing motor current greater than 10% RLA .68 Sec. after initiating a shutdown.
3. Look at phase currents as read in the Compressor Report.
4. If power factor correction capacitors are used, these capacitors should be placed on the motor side of the 2K1 and 2K2 contactors so as to be disconnected from the line when the motor is off.

Problem 45. *Starter Dry Run Test Diagnostic upon entering a Starter Dry Run Test.*

Corrective Action:

The Starter module is sensing either the presence of line voltage from the PTs or line current from the CTs.

Problem 46. *Starter Dry Run will not work.*

Corrective Action:

1. If the PTs are installed they sense voltage and prevent dry run
2. A major diagnostic is present
3. Unit is not in Stop mode
4. Starter senses the presence of currents
5. There is a (MMR) diagnostic present

Problem 47. *Stepper motor is humming.*

Corrective Action:

While in the hold mode, the stepper motor is driven with 1.0 amps. This is the case even if the actuator is fully closed. The humming is normal.

Problem 48. *Pressure Transducer shift in calibration. Diagnostics will be sensor calibration related such as sensor failure or oil pressure sensor calibration.*

Corrective Action:

1. Wired incorrectly. Check diagram.
2. Corrosion on X-ducer contacts
3. Bad transducer
4. Disregard diagnostics when the unit is a deep vacuum prior to charging.

Problem 49. *Rapid Time of Day Scrolling or Date jumps back one day.*

Corrective Action:

1. Problem one is rapid time of day and year scrolling. The problem is in the CLD software when we reach December 29, 30 and 31. Fix: Replace the CLD (Local Clear Language Display) with a X13650448-03 or newer. To stop the scrolling press Enter to get a valid date and set before or after Dec. 29/30.
2. Problem two is when the date jumps back one day. The date of January 4, 1995 is set and it jumps back to January 3, 1995. This is because 1996 is a leap year and the problem only exists on the year prior to leap year. Replace the CLD with a X13650448-03 or newer.

Problem 50. *Unit did not Transition diagnostics.*

Corrective Action:

1. Do a Starter Dry Run Test.
2. Check for 24 VAC input to all modules
3. Check for 24 VDC and 5VDC on the Starter module
4. Check all wiring and connections
5. Check for 120 VAC on the Starter module J4-1 and 2. J4 is an OPTO input circuit that recognizes transition complete. If there is no signal on J4, the unit will not transition.
6. Could have a bad Starter module.

General Troubleshooting Information

Problem 51. *Unit Tons Read-out on CLD does not work.*

Corrective Action:

- Verify that the condenser solenoid is connected to the condenser.
- Verify that the entering port of the solenoid goes to the entering water line.
- Verify that the leaving port of the solenoid goes to the leaving water line.
- With the solenoid de-energized, the entering water line is monitored.
- Verify that the Evaporator Solenoid is connected to the evaporator.

Problem 52. *High Vacuum Lockout. The UCP2 looks at the oil tank pressure via the oil tank pressure transducers. On R-123 units, if the pressure is -11.6 PSIG (3.1 PSIA) or greater, we get the high vacuum lockout. On R-11 units it is -10.9 (3.8 PSIA).*

Corrective Action:

- In Machine Configuration make sure the correct refrigerant is selected.
- If the unit has a "PREVAC" installed and you get a high vacuum lockout at Startup, contact La Crosse Technical Service. A special Circuit Module chip may be required.

Module Compatibility

UCP2 Module Compatibility

1. Chiller modules X13650450-02 or greater when installed in a system with a CLD of X13650448-01 will call out a diagnostic of (Unknown Diagnostic 905). The machine requires a CLD of X136504489-02 or greater.

2. Starter module X13650453-02 and greater requires Chiller Packet 20.
   Chiller module X13650450-01 does not support Packet 20. You need a Chiller module of X13650450-02 or greater along with the Starter module X13650453-02 through 6 or you will get a diagnostic of starter loss of communication with chiller. Beginning with Starter module X13650453-07, the Starter module no longer expects to receive Chiller Packet 20.

3. Chiller module X13650450-03 and earlier do not have the bit that the Stepper module looks for to determine if it should do an inlet vane motor BPI search on startup. These modules will do a BPI search on each startup.

4. TCI COM3 module X13650460-01, the TCI packet time to receive the information from Tracer is 15 seconds. The information is sent out every 10 seconds and you may get repeat (IFW) informational warning diagnostics filling up the diagnostic logs. TCI COM3 module X13650460-02 or greater is required.

5. To read evaporator approach temperature, you need a CLD of X13650448-04 and later along with a Chiller module of X13650450-04 and later.

Description of UCP2 Options

1. **TRACER COMMUNICATIONS INTERFACE MODULE (COM 3 MODULE)**
   This option must be ordered if the chiller is to communicate over a serial communication link to a TRACER 100.

2. **TRACER COMMUNICATIONS INTERFACE MODULE (COM 4 MODULE)**
   This option must be ordered if the chiller is to communicate over a serial communication link to a TRACER Summit.

3. **REMOTE CLEAR LANGUAGE DISPLAY MODULE**
   Enables the UCP2 to communicate serially with the remote CLD.
   The remote CLD panel (COPT:RCPL) communicates serially with 1-4 UCP2 equipped chillers that have the optional remote CLD. The local CLD stop command function has precedence over the remote function. The Custom Report and display language at the local CLD and remote CLD are independent.

4. **OPTIONS MODULE**
   The Options module is required to implement any/all of the following Control options. Some require additional sensor/transducers.

   4.1 Chilled water setpoint by external/remote source. Allows a remote source to set the chilled water setpoint via 4-20 Ma or 2-10 Vdc signal. The range is 0 F to 65 F.

   4.2 Current limit setpoint by external source. Allows a remote source to set the current limit setpoint via a 4-20 MA or 2-10 VDC SIGNAL. Range is 40% to 120%.

   4.3 Compressor percent (%) RLA output. Allows a remote system to receive a 2-10 VDC signal proportional to the chillers % RLA. Range is 0% TO 120%.

   4.4 Head relief request output. Allows a remote system to receive a binary signal for use with compressor surge protection and condenser limit by requesting lower entering cond. water temp. This option requires an additional transducer on the condenser.

   4.5 Maximum capacity output. Allows a remote system to receive a binary signal indicating the chiller is at maximum capacity.

   4.6 Heat recovery/auxiliary condenser entering and leaving water temperatures. This option includes the Option module. Allows UCP2 to monitor the entering and leaving heat recovery or auxiliary cond. water temps which are displayed at the local CLD.

   4.7. Free cooling machine mode enable/disable and valve control. Allows a remote source to re-enable/disable the chillers free cooling.

Description of UCP2 Options

5. **PRINTER INTERFACE MODULE**
   This option must be ordered if the UCP2 is to have a direct connect serial printer. The printer and cable must be ordered separately. This option includes ASHRAE Guideline 3 Report.

6. **CHILLED WATER RESET - OUTDOOR AIR TEMPERATURES**
   Provides for outdoor air temperature reset of the UCP2 front panel chilled water setpoint. Includes display of outdoor air temperature.

7. **WATER PRESSURE SENSORS FOR EVAP AND COND SYSTEM PRESSURE LESS THAN 150 PSIG.**
   Includes sensing of the entering and leaving water pressures of the evaporator and condenser, factory mounted in the water boxes. The Options module is not required. The following data will be shown:
   - Entering/leaving evaporator & condenser water pressure (PSIG)
   - Evaporator and condenser differential water pressure (PSID)
   - Evaporator/condenser GPM
   - Evaporator tons (Approximate)

   WATER PRESSURE SENSORS FOR EVAP AND COND SYSTEM GREATER THAN 150 PSIG
   Includes sensing of the differential evaporator and condenser water pressures. The Options module is included and required. The following data will be shown:
   - Evaporator and condenser differential water pressure (PSID)
   - Evaporator/condenser GPM
   - Evaporator tons (Approximate)

8. **BEARING OIL TEMPERATURE SENSORS**
   Includes factory installed sensors and safety cutouts (On high temp) to monitor the leaving bearing oil temperature: Sensor (1) monitors the Journal bearing temperature and Sensor (2) monitors the Thrust bearing temperature.

9. **PHASE VOLTAGE SENSORS**
   Includes factory installed potential transformers in the starter for monitoring/displaying phase voltage and this provides over/under voltage protection. The following is displayed:
   - Compressor phase voltage; Kilowatts Power Factor.

10. **ENHANCED CONDENSER LIMIT**
    Includes factory installed cond pressure tranducer, piping and wiring.
    Provides enhanced high pressure cut-out over cond limit which is standard.
    The head relief request relay will energize when cond. limit is approached. The Options module is included.

11. **DISCHARGE TEMP SENSOR**
    Includes a factory installed sensor and safety cutout on high compressor discharge temp. Allows the UCP2 to monitor compressor discharge temperature. When the chiller is selected with hot gas bypass this sensor is included.

12. **STARTER BY OTHERS**
    When the starter is being furnished by others, Trane furnishes the Starter module in the UCP2, and other wiring/components as needed. The starter must be built per Trane starter specifications.

Module Voltages

Chiller Module

- 1U1 is the "Master module", collecting data, status conditions, diagnostic information, etc. from modules (over the IPC link) from sensors and remote contacts and in turn communicating commands to other modules.

- 1U1 performs leaving water temperature and limits control algorithms, trading off chiller capacity against various "limits" that the chiller may be working against.

- 1U1 checks for valid setpoints and identifies unit type for other modules.

- Low Voltage (<30VAC) Inputs:
- 24 VAC, IPC Links to Internal, to Purge and to Starter Modules; Evap. Ewt and Lwt; Cond. Ewt and Lwt; External Auto Stop; Emergency Stop; Ambient Air CWR; Heat Pump Control; Evap. Water Delta P; Cond. Water Delta P
- High Voltage (>30VAC) Outputs:
- Evap. Water Pressure Solenoid; Cond. Water Pressure Solenoid; Evap. Water Pump Relay; Cond. Water Pump Relay; Compressor Run Relay; MMR Alarm Relay; MAR Alarm Relay; Limit Warning Relay

Figure 2
Chiller Module

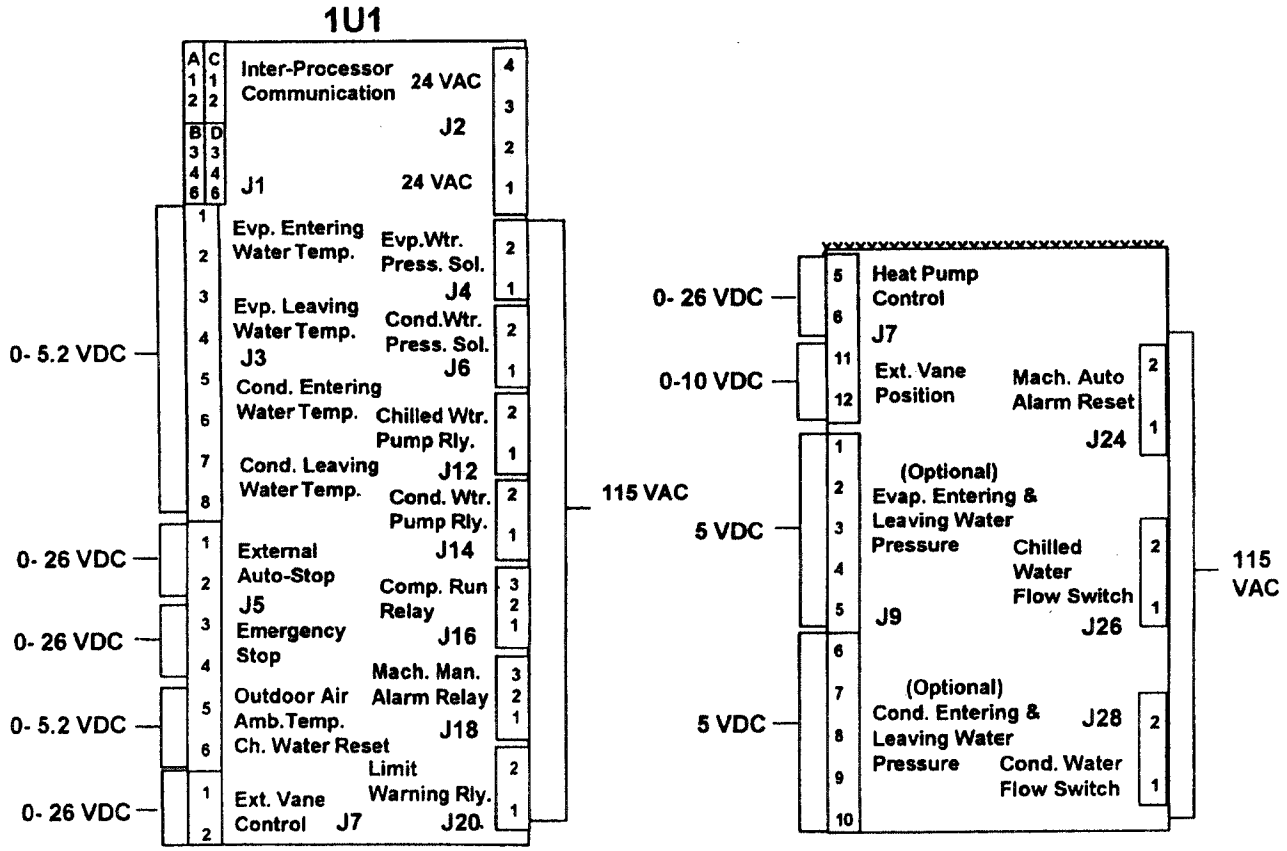

Module Voltages

Circuit Module

- 1U2 assigned functions associated with compressor motor, lubrication system and refrigerant monitoring.

- Low Voltage (<30VAC) Inputs:
- 24VAC; IPC link;
  Compressor motor winding temp. sensors 1, 2, 3;
  Oil tank temperature;
  Refrigerant monitor equipment room ppm level:
  Condenser refrigerant pressure;
  Oil sump pressure;
  Oil discharge pump pressure;

- High Voltage, High Amperage (120VAC) Inputs:
- High Condenser Pressure
- High Voltage, High Amperage (120VAC) Outputs:
- Vent line solenoid valve; oil tank heater; oil pump motor

Figure 3
Circuit Module

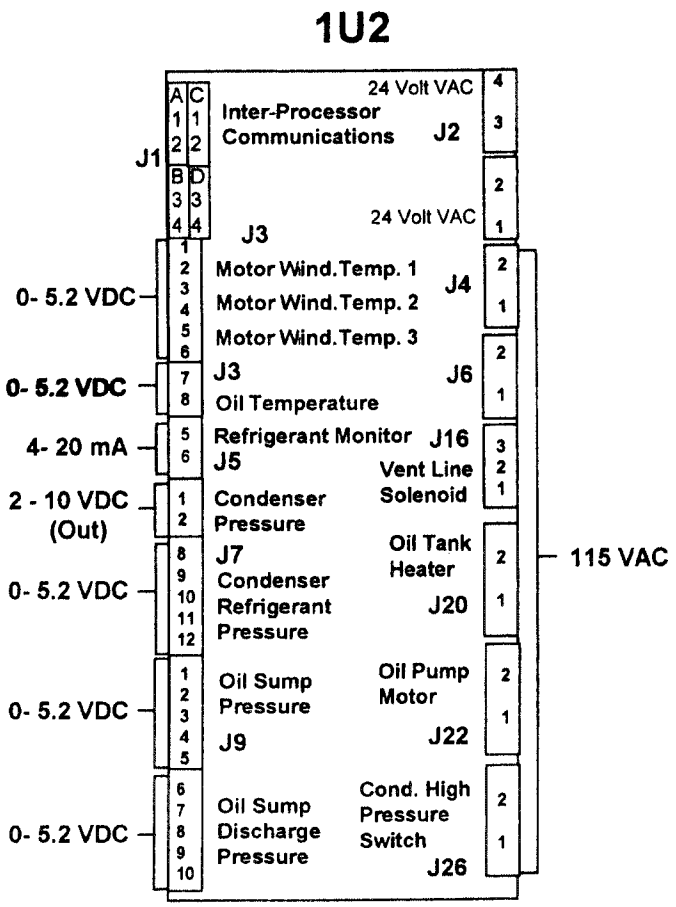

Input/Output Module

- Provided only when chiller is equipped with Hot Gas Bypass (HGBP) option.
- The I/O Module (1U10) operates the Hot Gas Bypass valve on CVHE and CVHF units in response to signals from stepper module 1U3.
- The module also receives input on HGBP valve position from the HGBP valve end switch.
- Low Voltage (<30VAC) Inputs
- 115 V HGBP valve drive signal
- High Voltage (>30VAC) Inputs
- 110 V HGPB valve proof-of-closure signal from valve end switch
- High Voltage (>30VAC) Outputs
- HGBP Open Triac
- HGBP Close Triac

Figure 4:
Input/Output Module

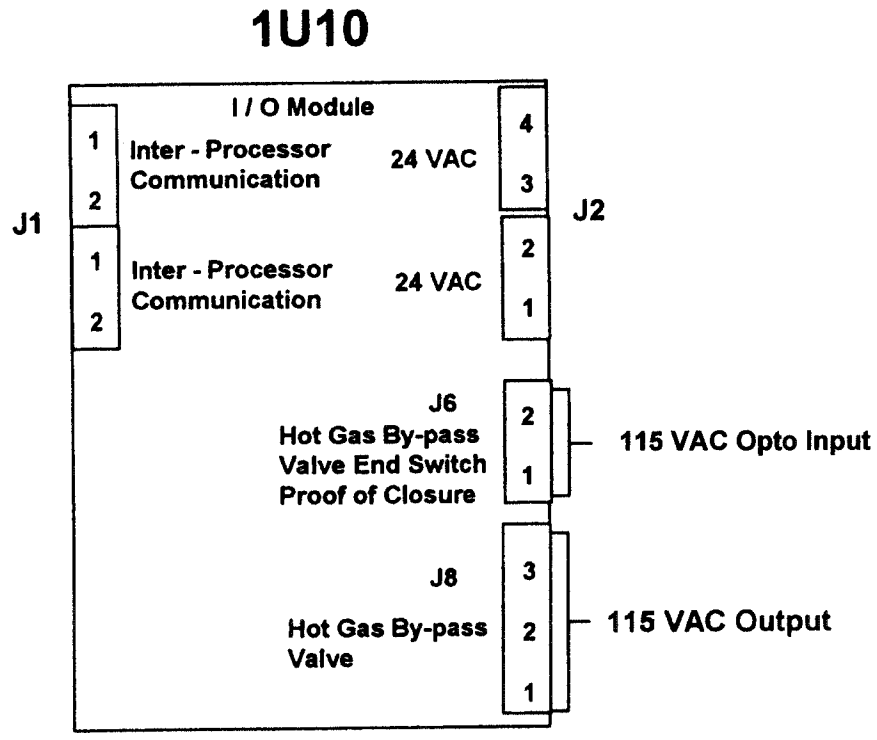

Module Voltages

Options Module

- As its name indicates, 1U5 provides the control or interface requirements for many of the options available with the UCP2.

- Low Voltage (<3OVAC) Outputs:
  - Heat Recovery Actuator
    % RLA Compressor

- High Voltage (>3OVAC) Outputs:
- Ice-Making Relay; Head Relief Request Relay; Max. Capacity Relay;
  Free Cooling Actuator Relay I (Liquid Line Valve);
  Free Cooling Auxiliary Relay;
  Free Cooling Actuator Relay 2 (Gas Line Valve)

Figure 5
Options Module

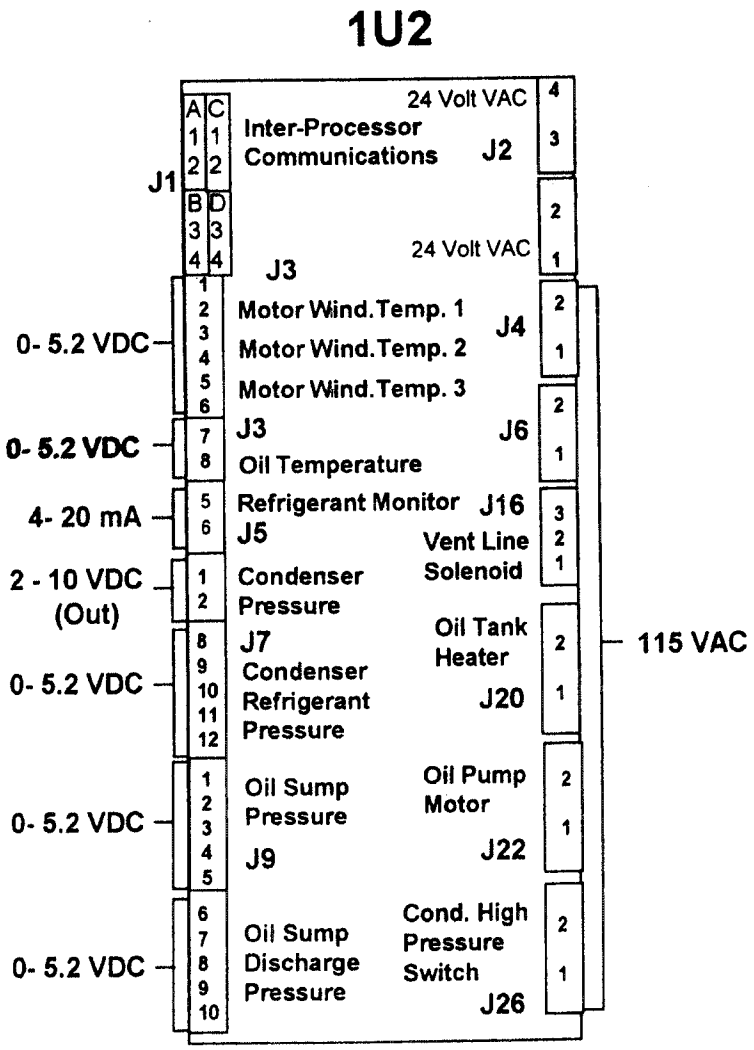

Module Voltages

Purge Module

- The purge module (3U1) is provided with the Trane Model PGRC Purifier Purge on CVHE and CVHF chillers. It is located in the purge control panel at the purge. It provides all inputs and outputs for the UCP2 to control purge operation.
- Low Voltage (<30VAC) Inputs:
- 24 VAC; IPC link to Chiller module
  Purge refrigeration compressor suction temperature;
  Purge tank liquid level sensor
  Service pumpout switch

- High Voltage (>3OVAC) Outputs:
- Exhaust valve solenoid; tank valve solenoid;
  Purge refrigerant compressor purge pumpout compressor;
  Purge pumpout running (Tracer); purge alarm

Figure 6
Purge Module

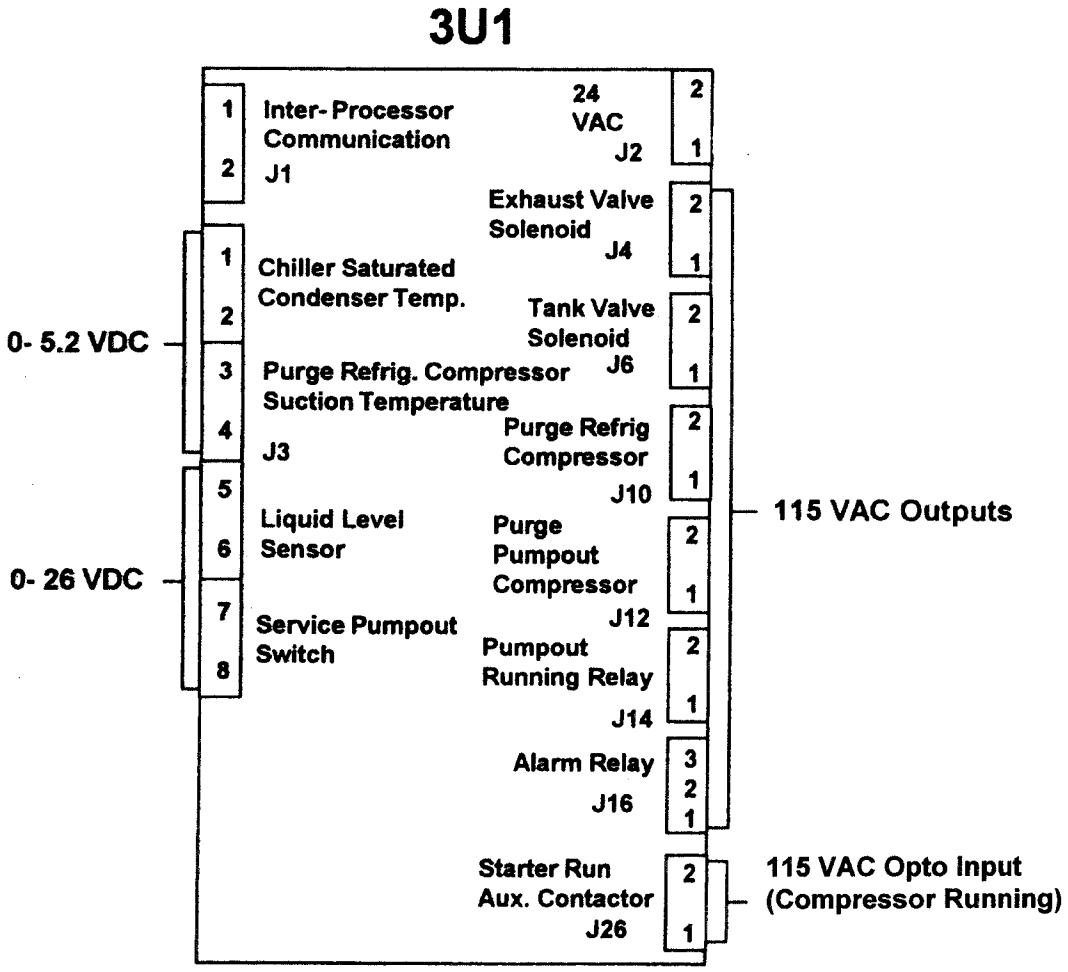

Module Voltages

Starter Module Values

- The starter module (2U1) is present in all Trane-provided starter panels, whether unit-mounted or remote. For CTV's, if no Trane starter is provided and the customer is providing the starter instead, 2U1 is mounted in an extension of the unit control panel. It is still designated as 2U1.

- 2U1 controls the starter when starting, running and stopping compressor motor and provides an interface to all types of starters and AFD's (adjustable frequency drives).

- 2U1 provides compressor motor protection for running overload, phase reversal, phase loss, phase unbalance and momentary power loss.

- Low Voltage (<30VAC) Inputs:
  - 24 VAC; IPC link to chiller module; phase voltages (optional); phase currents; solid-state heat sink temperature (optional); starter driver fault.

- Low Voltage (<30VAC) Outputs:
  - Speed signal output (0-10 VDC - optional)

- High Voltage (>30VAC) Inputs:
  - Transition complete (CTV only)

- High Voltage (>30VAC) Outputs:
  - Stop relay; starter relay; run relay; shorting relay; transition relay, shunt trip relay.

Figure 7
Starter Module

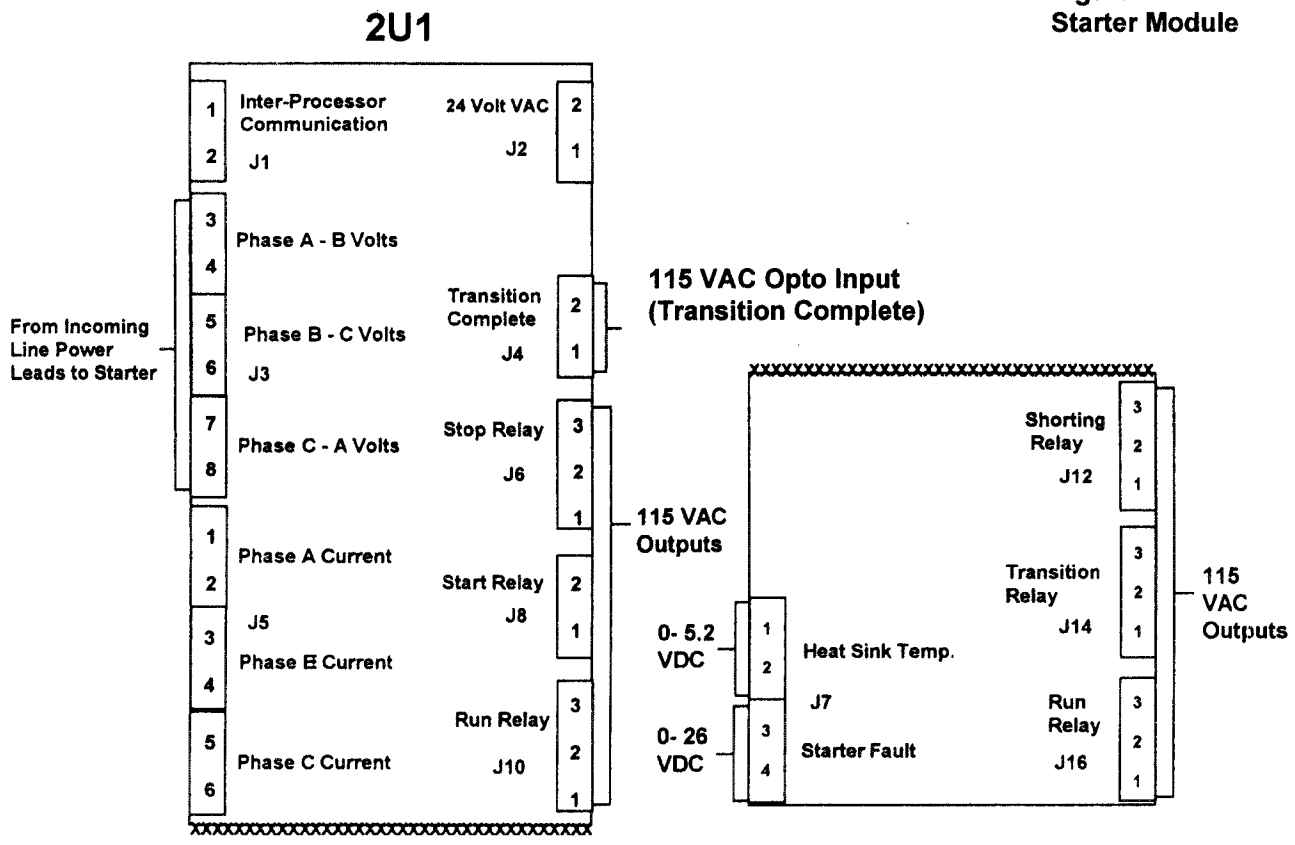

Module Voltages

Stepper Module

- The main function of 1U3 is to drive the Inlet Guide Vane Stepper motor (CTV) along with other functions. It does this in response to signals received from Chiller module 1UI.

- Low Voltage (<30VAC) Inputs:
- 24VAC; IPC link;
  Evaporator saturated refrigerant temperature;
  Compressor discharge temperature (optional);
  Bearing temps, 1 and 2;
  Inlet guide vane actuator; Binary position indicator
  Condenser saturated refrigerant temperature;

- Low Voltage, High Amperage (<30VAC) Outputs:
- Vane actuator stepper motor

Figure 8
Stepper Module

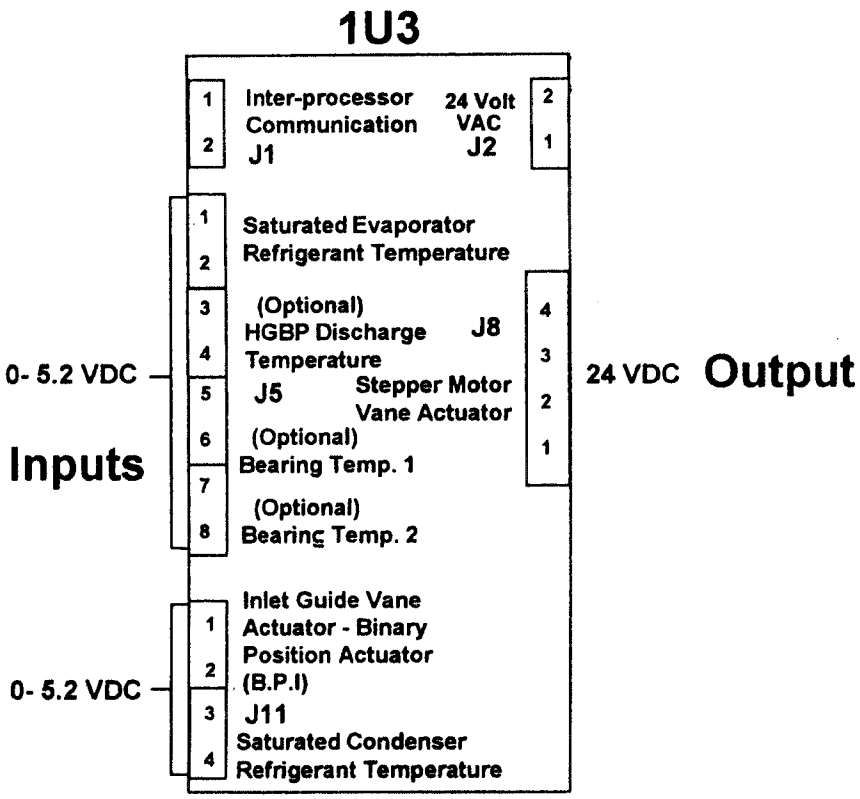

Module Dip Switch Settings

UCP2 Board Dip Switch Settings

Several of the UCP2 modules have dip switch settings on them, used to set up the board for 2-10 VDC or 4-20 MA signal inputs and/or outputs of the boards. The following are the various switch settings.

Chiller Module

	Switch	0-10V	4-20MA
External Vane Position	SW2-1	OFF	ON (SW2-2 and SW2-3 are not used)

Options Module

BOTH INPUTS MUST BE THE SAME TYPE. - (4 to 20 mA) (2 to 10 volts)

	Switch	0-10V	4-20MA
External Current Limit	SW2-1	OFF	ON(SW2-2 and SW2-3 are not used).
External Chilled Water	SW3-1	OFF	ON (SW3-2 and SW3-3 are not used)

Tracer COM 3

Switch	-1	-2	-3
SW1	OFF	OFF	OFF

Tracer COM 4

Switch	-1	-2	-3
SW1	OFF	ON	OFF

IPC BUFFER

Switch	-1	-2	-3
SW1	OFF	OFF	ON

PRINTER

Switch	-1	-2	-3
SW1	OFF	OFF	ON

Diagnosing A Non-Working Stepper Module

Method to Troubleshoot a UCP2 Stepper Module and Actuator

I. Overview

The UCP2 Stepper Module is used to drive a Stepper Motor, which is used to open and close a valve or actuator. The big difference between a Stepper Motor and other types of motors, is that instead of just making the motor turn, you can control the angular position of the rotor inside the motor, and therefore control the position of your valve or actuator.

The Stepper Motor has two windings inside. To distinguish between the two, we call them Winding 1 and Winding 2. The Stepper Module contains one drive circuit for each winding. Most of the failures you will probably deal with will result in the two internal fuses, FI and F2, inside the Stepper Module to open. These fuses protect the motor from damage, and are not easily accessible. Replacing these fuses in the field right now is not an acceptable option, because the original fuses have been through some special UL testing. We cannot guarantee safety to the customer if a blown fuse is replaced with another of a different type.

The Stepper Motor three states: Moving, Holding and Off:

1. In the moving state, current flows bi-directionally through each of the two windings. The frequency and amount of current is electronically controlled by the Stepper Module.

2. In the Holding State, current flows one way through each of the two windings. The amount of current is electronically controlled by the Stepper Module.

3. The Off state occurs only when the Stepper Module power is cycled. Until the Stepper receives an order from the Chiller Module to move, no current flows through the Stepper Motor windings.

II. Quick Test of Stepper Board

A. This section will show how to test the main power points of the Stepper Board to get an idea of where the problem is.

   1. If the UCP2 Control Panel is unpowered, unplug the J2 connectors from the Stepper board and continue to Section III to check motor and wiring resistance's.

   2. If the UCP2 Control Panel is powered, measure and compare the Power Input (J2) and the 4 Test Points at the right side of the Stepper board with Table 1.

Diagnosing A Non-Working Stepper Module

Table 1: UCP2 Stepper Module Test Point Voltage Limits

Connector		Vac	Vdc
J2 - (1 to 2) or (3 to 4)		20.4 to 33.12 Vac	=0 Vdc
J2 - (1 to case) or (2 to case)		10 to 17 Vac	13.12 to 21.81 Vdc
TP2: 5V to ground	≅	0 Vac	4.8 to 5.2 Vdc
TP4: 24 V to ground	≅	0 Vac	23.2 to 25.1 Vdc
TP3: 14 V to ground	≅	0 Vac	11.45 to 15.75 Vdc
TP1: 35 V to ground		100 m Vac to 72 m Vac	26 to 48 Vdc

If any of the voltages are out of range, there is a malfunction on the Stepper Board.
The majority of these malfunctions may be diagnosed by using Table 2. The ones marked with a star have been seen in the field before:

Table 2: UCP2 Stepper Module Troubleshooting

Condition(s)	Possible Problem	Possible Cause(s)	(Solution(s)
Voltage at Test Points TP1-TP4 on Stepper Module ≅0. Motor winding resistance check pin to conduit ≅0. Motor does not move.	Wiring between Stepper Module and actuator motor is shorted to ground.	1. Wire insulation bared inside conduit. 2. Wire insulation bared or pinched inside motor junction box.	1. Seal wire or run new wire through conduit. 2. Seal wire, or restrip and rewire motor junction box. See Table 4 for wiring diagram.

Diagnosing A Non-Working Stepper Module

Continuation of Table 2: UCP2 Stepper Module Troubleshooting

Condition(s)	Possible Problem	Possible Cause(s)	Solution(s)
Voltage at Test Points TP1-TP4 on Stepper Module ≅0. Motor winding restance check pin to pin fails. Motor does not move.	Wiring shorted together inside conduit between Stepper Module and actuator motor.	Insulation bared.	Seal wire or run new wire through conduit. See Table 4 for wiring diagram.
	Wiring shorted together at board edge connector J6 or J8	*1. metal shavings from drilling into UCP2 Panel form bridge. 2. Loose wire strands form bridge.	1. Inspect J6 and J8 connectors. Remove any metal shavings bridging the wires before powering module. 2. Restrip and rewire the board edge connector.
	Wires shorted together inside motor junction box.	Insulation bared.	Seal wire or run new wire through conduit. See Table 4 for wiring diagram.
Stepper Module TP1 - TP4 OK. Motor winding resistance check OK. Motor does not move.	Motor does not move and steps display does not change on CLD when using manual vane control.	UCP2 is not in Stop Mode and Chiller Module is overriding manual vane control.	Hit stop button on CLD, and try again.

Continuation of Table 2: UCP2 Stepper Module Troubleshooting

Condition(s)	Possible Problem	Possible Cause(s)	Solution(s)
Stepper Module TP1 - TP4 OK. Motor winding resistance check OK. Motor runs backward.	Motor runs backwards.	Motor is miswired.	Unplug the motor connector (J6 or J8) from the Stepper Module. Use Table 3 and Table 4 to swap wire pairs (1, 3) or (2, 4) so that the motor is wired properly.
Stepper Module TP1 - TP4 OK. Motor winding resistance check of W1 or W2 open circuit. CLD shows steps are changing in manual mode. Motor does not move.	1. Open circuit in wiring to motor. 2. Open in one or both of the two actuator windings.	*1. Loose or disconnected wireat J6 or J8 connector, or at Motor terminal. 2. Wiring from Stepper to Motor is open-circuited. 3. Winding 1 or 2 open inside motor.	1. Check wiring with Table 4. Reconnect any loose wires. 2. Check wiring with Table 4. Replace any open wires. 3. Replace motor.

III. Check Stepper Motor and Wiring for Shorts and Opens

A. During this stage, motor winding and wire resistance's will be measured to ensure proper continuity.

1. If the unit is powered, hit the stop button on the CLD and use manual mode in the service tools menu to step the actuators all the way to position 0.

2. Unplug power (J2 connector) from the Stepper Module.

3. Unplug J6 and J8 from the board.

4. Measure the DC resistance of one of the motor windings by measuring between what would be Pin (1,3) or Pin (2,4) on the Stepper Board at the unplugged connector (See Table 3).

5. If the resistance is lower than the limits in Table 3 there is a short in the wiring between the Stepper Module and the motor or the in motor winding. Note that nominal values are not including wire resistance's.

6. If the resistance is higher than the limits in Table 3 the wiring between the Stepper Module and the motor or a winding is open. Note that nominal values are not including wire resistance's.

Table 3: Motor Winding Resistance

J6 or J8 Connector Pin	Acceptable DC Resistance Range	CTV Nominal Resistance
(4 to 3)	Open Circuit	NA
(4 to 2): W1	50 mOhm to 5 Ohm	1.68 Ohm
(4 to 1)	Open Circuit	N/A
(3 to 2)	Open Circuit	N/A
(3 to 1): W2	50 mOhm to 5 Ohm	1.68 Ohm
(2 to 1)	Open Circuit	N/A
(4 to conduit)	Open Circuit	N/A
(3 to conduit)	Open Circuit	N/A
(2 to conduit)	Open Circuit	N/A
(1 to conduit)	Open Circuit	N/A

7. If the winding resistance is in the range, plug the j connector back into the appropriate socket.

8. Perform steps 3-7 for each winding of the motor on the Stepper Module.

9. If there is a short or an open, you will need to check the wiring to the motor, and then check the motor.

10. If the windings resistance check passes, and you have not measured the Stepper Module voltages while it is powered, then plug J2 back into the module and go back to Section II, Quick Test of Stepper Board.

B. If you need to disconnect the wires going to the motor for any reason, Table 4 is a wiring table you can use to reconnect them.

Table 4: Stepper Motor Connections

J6 or J8 Connector Pin# on Stepper	Motor Winding Output Signal Name	Stepper Motor Terminal Connection
4	1+	3
3	2+	5
2	1-	1
1	2-	4

IV. Motor Voltages for CTV Stepper Motor

A. With the motor connector J6 (or J8) connected to the Stepper Board, and the Stepper powered, measure the AC and DC voltages of the connector pins, and compare to Table 5 and 6.

Table 5: Motor Voltages with Actuator Holding

Connector Pin	AC Voltage	DC Voltage
J6 - (4 to 3)	≅ 0 or (5.8 - 10)	- 400 m V to +400 m V
J6 - (4 to 2)	5.8 - 8.2	≅ ± 400 m V, but not 0 m V
J6 - (3 to 1)	≅ 0 or (5.8 - 10)	- 400 m V to +400 m V
J6 - (3 to 2)	≅ 0 or (5.8 - 10)	- 400 m V to +400 m V
J6 - (3 to 1)	5.8 to 8.2	≅ ± 400 m V, but not 0 m V
J6 - (2 to 1)	≅ 0 or (5.8 - 10)	- 400 m V to +400 m V
J6 - (4 to conduit)	≅ 0 or (5.8 - 8)	(0.3 - 0.43) or (1.04 - 1.135)
J6 - (3 to conduit)	≅ 0 or (5.8 - 8)	(0.3 - 0.43) or (1.04 - 1.135)
J6 - (2 to conduit)	≅ 0 or (5.8 - 8)	(0.3 - 0.43) or (1.04 - 1.135)
J6 - (1 to conduit)	≅ 0 or (5.8 - 8)	(0.3 - 0.43) or (1.04 - 1.135)

Table 6: Motor Voltages with Actuator Moving

Connector Pin	AC Voltage	DC Voltage
J6 - (4 to 3)	(16.6 - 25.9)	-720 m V to +720 m V
J6 - (4 to 2)	(20.8 - 27.5)	-720 m V to +720 m V
J6 - (4 to 1)	16.6 - 25.9)	-720 m V to +720 m V
J6 - (3 to 2)	16.6 - 25.9)	-720 m V to +720 m V
J6 - (3 to 1)	20.8 - 27.5)	-720 m V to +720 m V
J6 - (2 to 1)	(16.6 - 25.9)	-720 m V to +720 m V
J6 - (4 to conduit)	(11.4 - 17.3)	(9.1 - 10.1)
J6 - (4 to conduit)	(11.4 - 17.3)	(9.1 - 10.1)
J6 - (4 to conduit)	(11.4 - 17.3)	(9.1 - 10.1)
J6 - (4 to conduit)	(11.4 - 17.3)	(9.1 - 10.1)

External Current Limit Setpoint

- Option Module J7-11, -12 (-, +)

- Isolated 2-10 Vdc or 4-20 ma

- UCP2 shall accept either a 2-10 Vdc or 4-20 ma analog input suitable for customer connection to set the unit external current limit setpoint. 2-10 Vdc and 4-20 ma shall each correspond to a 40 to 120% RLA range. CTV UCP2 will limit the maximum ECLS to 100%.

- The following must be "Set".

1. SW2-1 OFF for 2-10 Vdc
   ON for 4-20 ma
2. Current Limit Setpoint Source: External Source

3. External Current Limit Setpoint: Installed

4. External Setpoint Inputs: 2-10 Vdc or 4-20 ma.

Module Set-Up Procedures For:

Refrigerant Monitor Input

- Analog type input
  4-20ma input signal to the Circuit module J5-5 and J5-6. This represents 0-100 ppm.
  Under machine configuration "Refrigerant Monitor Type" is '01' for Analog.
  Typical input if using an RMWC generation Monitor.

- IPC Monitor (Requires RMWD monitor with Version 2 Software)
  Direct communication to the CLD via the IPC.
  Under Machine Configuration "Refrigerant Monitor Type" is '02' for IPC Monitor.
  Also allows monitor calibration and setup. Please note that the monitor cannot have a local display and communicate with the UCP2. If the customer requires a local display, he can connect an RMWD style monitor up like an analog type previously described.

Load Indication Output

- Options Module J7-3,-4

- 2-10 Vdc

- As an option, the UCM shall provide a 0-10 Vdc analog output to indicate % RLA. The transfer function shall be 2 to 10 Vdc corresponding to 0 to 120% RLA.

Module Set-Up Procedures For:

External Chilled Water Setpoint

GENERIC INTERFACE, ALLOWS THE CUSTOMER TO CHANGE THE CHILLED WATER SETPOINT FROM A REMOTE LOCATION.

UCP2 SHALL ACCEPT EITHER A 2-10 VDC OR 4-20 MA ISOLATED ANALOG INPUT SUITABLE FOR CUSTOMER CONNECTION TO SET THE UNIT LEAVING CHILLED WATER SETPOINT. THE 2-10 VDC AND
4-20 MA ANALOG INPUT EACH CORRESPONDS TO A 0 TO 65 F (- 17.8 TO 18.3 C) CWS RANGE.
SEE LINEAR RELATIONSHIP ON CHART.

THE ISOLATED ANALOG INPUT SHOULD BE CONNECTED AT THE J9 PLUG, PINS 4 (NEG) AND 5 (POS) ON THE OPTIONS MODULE.

THE FOLLOWING ITEMS NEED TO BE "SET".

1. SW3-1 OFF FOR 2-10 VDC.
   ON FOR 4-20 MA.

2. CHILLED WATER RESET TYPE:
   DISABLE - OPERATOR SETTINGS GROUP

3. CHILLED WATER SETPOINT SOURCE :
   EXTERNAL - OPERATOR SETTINS GROUP

4. SETPOINT SOURCE OVERRIDE :
   NONE - OPERATOR SETTINGS GROUP

5. EXTERNAL CHILLED WATER SETPOINT :
   INSTALLED - SERVICE SETTINGS GROUP
   - MACHINE CONFIGURATION

4-20 MA	2-10 VDC	°F	C°
20	10	65.00	18.33
19.75		63.98	17.77
19.5	9.75	62.97	17.20
19.25		61.95	16.64
19	9.5	60.94	16.08
18.75		59.92	15.51
18.5	9.25	58.91	14.95
18.25		57.89	14.38
18	9	56.88	13.82
17.75		55.86	13.26
17.5	8.75	54.84	12.69
17.25		53.83	12.13
17	8.5	52.81	11.56
16.75		51.80	11.00
16.5	8.25	50.78	10.43
16.25		49.77	9.87
16	8	48.75	9.31
15.75		47.73	8.74
15.5	7.75	46.72	8.18
15.25		45.70	7.61
15	7.5	44.69	7.05
14.75		43.67	6.48
14.5	7.25	42.66	5.92
14.25		41.64	5.36
14	7	40.63	4.79
13.75		39.61	4.23
13.5	6.75	38.59	3.66
13.25		37.58	3.10
13	6.5	36.56	2.53
12.75		35.55	1.97
12.5	6.25	34.53	1.41
12.25		33.52	0.84
12	6	32.50	0.28
11.75		31.48	-0.29
11.5	5.75	30.47	-0.85
11.25		29.45	-1.41
11	5.5	28.44	-1.98
10.75		27.42	-2.54
10.5	5.25	26.41	-3.11
10.25		25.39	-3.67
10	5	24.38	-4.24
9.75		23.36	-4.80
9.5	4.75	22.34	-5.36
9.25		21.33	-5.93
9	4.5	20.31	-6.49
8.75		19.30	-7.06
8.5	4.25	18.28	-7.62
8.25		17.27	-8.19
8	4	16.25	-8.75
7.75		15.23	-9.31
7.5	3.75	14.22	-9.88
7.25		13.20	-10.44
7	3.5	12.19	-11.01
6.75		11.17	-11.57
6.5	3.25	10.16	-12.14
6.25		9.14	-12.70
6	3	8.13	-13.26
5.75		7.11	-13.83
5.5	2.75	6.09	-14.39
5.25		5.08	-14.96
5	2.5	4.06	-15.52
4.75		3.05	-16.09
4.5	2.25	2.03	-16.65
4.25		1.02	-17.21
4	2	0.00	-17.78

Analog Input Table Abbreviations

The information below is an explanation of abbreviations used in Analog Input Tables which are shown in this section.

-- Oil Pressures

-- Water Pressures

A1: Entering and Leaving Evap Temp.
Purge Compressor Suction Temp.

A2: Oil Temp.
Entering and Leaving Condenser
Aux HR Entering and Leaving Temp.
Compressor Discharge Ref Temp.
Bearing Temps 1 and 2
Saturated Cond. Refrigerant Temp.
Outdoor Air Temperature.

A4: Saturated Evap Temp.

A6: Compressor Motor Winding Temp 75 Ohm

Note: A1, A2 and A4 are the same sensor.

Note:

1. Min. Res. and Max. Res. = Minimum and Maximum Resistance in Ohms.
2. Min Vterm. and Max. Vterm = Minimum and Maximum DC Voltage measure at the appropriate module terminal.

Table 7: Pressure vs Voltage for Oil Pressures

Oil Pressure (PSIG)	Differential Voltage (DC)		
	Min	Nom	Max
-15	-0.0017	0.0000	0.0017
-10	0.0033	0.0050	0.0067
-5	0.0083	0.0100	0.0117
-4	0.0093	0.0110	0.0127
-3	0.0103	0.0120	0.0137
-2	0.0113	0.0130	0.0147
-1	0.0122	0.0140	0.0158
0	0.0132	0.0150	0.0168
1	0.0142	0.0160	0.0178
2	0.0151	0.0170	0.0189
3	0.0161	0.0180	0.0199
4	0.0171	0.0190	0.0209
5	0.0180	0.0200	0.0220
6	0.0190	0.0210	0.0230
7	0.0199	0.0220	0.0241
8	0.0209	0.0230	0.0251
9	0.0218	0.0240	0.0262
10	0.0228	0.0250	0.0272
11	0.0237	0.0260	0.0283
12	0.0247	0.0270	0.0293
13	0.0256	0.0280	0.0304
14	0.0266	0.0290	0.0314
15	0.0275	0.0300	0.0325
16	0.0285	0.0310	0.0335
17	0.0294	0.0320	0.0346
18	0.0303	0.0330	0.0357
19	0.0313	0.0340	0.0367
20	0.0322	0.0350	0.0378
25	0.0369	0.0400	0.0431
30	0.0417	0.0450	0.0483
35	0.0464	0.0500	0.0536

Voltages and Resistances of Oil Pressure Input Terminals			
	Min	Nom	Max
+5v to GND	4.75	5.0	5.25
V- to GND	1.6	2.0	2.5
V+ to GND	1.6	2.0	2.5

Table 8: Pressure vs Voltage for Water Pressures

Voltages and Resistances of Water Pressure Transducers Input Terminals			
	Min	Nom	Max
+5V to GND	4.75	5.0	5.25
V- to GND	1.6	2.0	2.5
V+ to GND	1.6	2.0	2.5

Water Pressure (PSIG)	Nom
0	0.0000
1	0.0003
2	0.0007
3	0.0010
4	0.0013
5	0.0017
6	0.0020
7	0.0023
8	0.0027
9	0.0030
10	0.0033
11	0.0037
12	0.0040
13	0.0043
14	0.0047
15	0.0050
16	0.0053
17	0.0057
18	0.0060
19	0.0063
20	0.0067
21	0.0070
22	0.0073
23	0.0077
24	0.0080
25	0.0083
26	0.0087
27	0.0090
28	0.0093
29	0.0097
30	0.0100
31	0.0103
32	0.0107
33	0.0110
34	0.0113
35	0.0117
36	0.0120
37	0.0123
38	0.0127
39	0.0130
40	0.0133
41	0.0137
42	0.0140
43	0.0143
44	0.0147
45	0.0150
46	0.0153
47	0.0157
48	0.0160
49	0.0163
50	0.0167

Table 8: Pressure vs Voltage for Water Pressures

Water Pressure (PSIG)	Nom
51	0.0170
52	0.0173
53	0.0177
54	0.0180
55	0.0183
56	0.0187
57	0.0190
58	0.0193
59	0.0197
60	0.0200
61	0.0203
62	0.0207
63	0.0210
64	0.0213
65	0.0217
66	0.0220
67	0.0223
68	0.0227
69	0.0230
70	0.0233
71	0.0237
72	0.0240
73	0.0243
74	0.0247
75	0.0250
76	0.0253
77	0.0257
78	0.0260
79	0.0263
80	0.0267
81	0.0270
82	0.0273
83	0.0277
84	0.0280
85	0.0283
86	0.0287
87	0.0290
88	0.0293
89	0.0297
90	0.0300
91	0.0303
92	0.0307
93	0.0310
94	0.0313
95	0.0317
96	0.0320
97	0.0323
98	0.0327
99	0.0330
100	0.0333
101	0.0337
102	0.0340
103	0.0343
104	0.0347
105	0.0350

Table 8: Pressure vs Voltage for Water Pressures

Water Pressure (PSIG)	Nominal
106	0.0353
107	0.0357
108	0.0360
109	0.0363
110	0.0367
111	0.0370
112	0.0373
113	0.0377
114	0.0380
115	0.0383
116	0.0387
117	0.0390
118	0.0393
119	0.0397
120	0.0400
121	0.0403
122	0.0407
123	0.0410
124	0.0413
125	0.0417
126	0.0420
127	0.0423
128	0.0427
129	0.0430
130	0.0433
131	0.0437
132	0.0440
133	0.0443
134	0.0447
135	0.0450
136	0.0453
137	0.0457
138	0.0460
139	0.0463
140	0.0467
141	0.0470
142	0.0473
143	0.0477
144	0.0480
145	0.0483
146	0.0487
147	0.0490
148	0.0493
149	0.0497
150	0.0500

Voltages and Resistances of Pressure Input Terminals			
	Min	Nom	Max
+5V to GND	4.75	5.0	5.25
V- to GND	1.6	2.0	2.5
V+ to GND	1.6	2.0	2.5

Water Pressure			
Rin	420	470	520
Rout	600	900	1.2K

Table 9: Purge Compressor Suction Temp.

A1 Analog Input
Thermistor Accuracy = 0.54 ° F from -14 to 79 ° F
Type U Thermistor Temperature Versus Resistance and Terminal Voltage Table for a pullup resistor of 24900 Ohms.
Used to sense temperatures at the following point:
1. Purge Compressor Suction Temp. - CVHE/F/G

Temp F	Min Res	Max Res	Min Vterm	Max Vterm
-10.0	119172	123480	4.115	4.145
-5.0	101107	104703	3.992	4.024
-4.0	97868	101337	3.966	3.999
-3.0	94743	98090	3.940	3.973
-2.0	91726	94957	3.913	3.946
-1.0	88816	91934	3.886	3.920
0.0	86006	89016	3.858	3.893
1.0	83293	86199	3.830	3.865
2.0	80675	83480	3.802	3.837
3.0	78146	80855	3.773	3.809
4.0	75705	78320	3.743	3.780
5.0	73347	75873	3.714	3.751
10.0	62706	64832	3.560	3.600
15.0	53738	55532	3.399	3.441
16.0	52119	53854	3.366	3.408
17.0	50554	52231	3.332	3.375
18.0	49040	50663	3.299	3.341
19.0	47577	49145	3.265	3.308
20.0	46161	47678	3.231	3.274
25.0	39742	41029	3.058	3.102
30.0	34292	35386	2.881	2.926
35.0	29713	30628	2.705	2.750
40.0	25830	26611	2.532	2.577
45.0	22512	23180	2.361	2.405
50.0	19668	20242	2.194	2.237
55.0	17225	17718	2.033	2.075
60.0	15120	15546	1.879	1.919
65.0	13303	13670	1.731	1.770
70.0	11729	12048	1.592	1.629
75.0	10364	10641	1.462	1.496

Table 10: Evap. Entering and Leaving Water Temp.

A1 Analog Input
Thermistor Accuracy = 0.54 ° F from 15 to 140 ° F
Type U Thermistor Temperature Versus Resistance and Terminal Voltage Table for a pullup resistor of 24900 Ohms.
Used to sense temperatures at the following point:
1. Evap. Entering and Leaving Water Temp. Pair - CVHE/F/G

Temp F	Min Res	Max Res	Min Vterm	Max Vterm
15.0	53738	55532	3.399	3.441
20.0	46161	47678	3.231	3.274
21.0	44791	46259	3.196	3.240
22.0	43466	44886	3.162	3.206
23.0	42183	43558	3.127	3.171
24.0	40943	42273	3.092	3.137
25.0	39742	41029	3.058	3.102
26.0	38580	39826	3.022	3.067
27.0	37455	38661	2.987	3.032
28.0	36367	37534	2.952	2.997
29.0	35312	36442	2.916	2.962
30.0	34292	35386	2.881	2.926
31.0	33304	34363	2.845	2.891
32.0	32358	33365	2.810	2.855
33.0	31448	32423	2.775	2.820
34.0	30566	31511	2.740	2.785
35.0	29713	30628	2.705	2.750
36.0	28886	29773	2.671	2.715
37.0	28086	28944	2.636	2.681
38.0	27310	28142	2.601	2.646
39.0	26559	27364	2.566	2.611
40.0	25830	26611	2.532	2.577
41.0	25125	25881	2.497	2.542
42.0	24441	25174	2.463	2.508
43.0	23778	24489	2.429	2.473
44.0	23135	23824	2.395	2.439
45.0	22512	23180	2.361	2.405
46.0	21908	22556	2.327	2.371
47.0	21322	21950	2.294	2.337
48.0	20754	21363	2.260	2.304
49.0	20203	20794	2.227	2.270
50.0	19668	20242	2.194	2.237
55.0	17225	17718	2.033	2.075
60.0	15120	15546	1.879	1.919
65.0	13303	13670	1.731	1.770
70.0	11729	12048	1.592	1.629
75.0	10364	10641	1.462	1.496
80.0	9177	9418	1.339	1.372

Table 11: Saturated Cond. Refrigerant Temp.

A2 Analog Input
Thermistor Accuracy = 0.54 ° F from 15 to 140 ° F
Type U Thermistor Temperature Versus Resistance and Terminal Voltage Table for a pullup resistor of 6980 Ohms.
Saturated Cond. Refrigerant Temp - CVHE/F/G

Temp F	Min Res	Max Res	Min Vterm	Max Vterm
15.0	53738	55532	4.416	4.435
17.0	50554	52231	4.384	4.404
19.0	47577	49145	4.350	4.372
21.0	44791	46259	4.316	4.338
23.0	42183	43558	4.280	4.303
25.0	39742	41029	4.242	4.266
27.0	37455	38661	4.204	4.228
29.0	35312	36442	4.163	4.189
31.0	33304	34363	4.122	4.149
33.0	31448	32423	4.080	4.107
35.0	29713	30628	4.037	4.065
37.0	28086	28944	3.992	4.021
39.0	26559	27364	3.946	3.976
41.0	25125	25881	3.900	3.930
43.0	23778	24489	3.852	3.883
45.0	22512	23180	3.803	3.835
47.0	21322	21950	3.752	3.785
49.0	20203	20794	3.701	3.735
51.0	19150	19706	3.649	3.684
53.0	18158	18682	3.596	3.631
55.0	17225	17718	3.542	3.578
57.0	16346	16810	3.488	3.524
59.0	15517	15955	3.432	3.469
61.0	14735	15148	3.376	3.413
63.0	13998	14388	3.319	3.357
65.0	13303	13670	3.262	3.300
67.0	12646	12993	3.204	3.243
69.0	12026	12354	3.146	3.185
71.0	11441	11750	3.088	3.127
73.0	10887	11180	3.029	3.068
75.0	10364	10641	2.970	3.010
77.0	9870	10131	2.911	2.951
79.0	9402	9649	2.851	2.891
81.0	8959	9193	2.792	2.832
83.0	8539	8761	2.733	2.773
85.0	8142	8353	2.674	2.714
87.0	7766	7965	2.615	2.655
89.0	7410	7599	2.557	2.597
90.0	7239	7422	2.528	2.567

Table 11: Saturated Cond. Refrigerant Temp.

Temp F	Min Res	Max Res	Min Vterm	Max Vterm
91.0	7072	7251	2.498	2.538
92.0	6910	7084	2.470	2.509
93.0	6751	6921	2.441	2.480
94.0	6597	6763	2.412	2.452
95.0	6447	6608	2.383	2.423
96.0	6301	6458	2.355	2.394
97.0	6159	6312	2.326	2.366
98.0	6020	6169	2.298	2.337
99.0	5885	6030	2.270	2.309
100.0	5754	5895	2.242	2.281
101.0	5625	5763	2.214	2.253
102.0	5500	5634	2.187	2.225
103.0	5378	5509	2.159	2.198
104.0	5260	5387	2.132	2.170
105.0	5144	5268	2.105	2.143
107.0	4921	5039	2.051	2.089
109.0	4709	4821	1.999	2.036
111.0	4507	4614	1.946	1.983
113.0	4315	4417	1.895	1.931
115.0	4133	4230	1.845	1.880
117.0	3959	4051	1.795	1.830
119.0	3794	3882	1.747	1.781
121.0	3636	3720	1.699	1.733
123.0	3487	3566	1.653	1.686

Table 12: Bearing Temp., Oil Temp. and Compressor Discharge Temp.

A2 Analog Input
Thermistor Accuracy = 3.24 ° F from 32 to 100 ° F.
Thermistor Accuracy = 0.72 ° F from 100 to 201 ° F.
Type U Thermistor Temperature Versus Resistance and Terminal Voltage Table for a pullup resistor of 6980 Ohms.

Used to sense temperatures at the following points:
1. Bearing #1 Temp - CVHE/F/G
2. Bearing #2 Temp - CVHE/F/G
3. Oil Temp - CVHE/F/G
4. Compressor Discharge Temp - CVHE/F/G

Temp F	Min Res	Max Res	Min Vterm	Max Vterm
90.0	6798	7862	2.453	2.642
91.0	6643	7679	2.424	2.613
92.0	6492	7501	2.395	2.583
93.0	6345	7328	2.367	2.554
94.0	6201	7159	2.338	2.525
95.0	6062	6994	2.310	2.496
96.0	5925	6834	2.282	2.467
97.0	5793	6678	2.254	2.438
98.0	5663	6526	2.226	2.409
99.0	5537	6378	2.199	2.381
100.0	5730	5918	2.238	2.285
101.0	5603	5786	2.210	2.257
102.0	5478	5657	2.183	2.229
103.0	5357	5531	2.155	2.202
104.0	5238	5408	2.128	2.174
105.0	5123	5289	2.101	2.147
106.0	5011	5172	2.074	2.120
107.0	4901	5058	2.048	2.093
108.0	4794	4948	2.021	2.066
109.0	4690	4840	1.995	2.039
110.0	4589	4734	1.969	2.013
111.0	4490	4632	1.943	1.987
112.0	4393	4532	1.917	1.961
113.0	4299	4434	1.892	1.935
114.0	4207	4339	1.866	1.909
115.0	4117	4246	1.841	1.884
116.0	4029	4155	1.816	1.859
117.0	3944	4067	1.792	1.834
118.0	3861	3980	1.767	1.809
119.0	3779	3896	1.743	1.785
120.0	3700	3814	1.719	1.760

Table 12: Bearing Temp., Oil Temp. and Compressor Discharge Temp.

Temp F	Min Res	Max Res	Min Vterm	Max Vterm
121.0	3623	3734	1.696	1.736
122.0	3547	3655	1.672	1.712
123.0	3474	3579	1.649	1.689
124.0	3402	3505	1.626	1.666
125.0	3332	3433	1.604	1.643
126.0	3264	3362	1.581	1.620
127.0	3197	3293	1.559	1.598
128.0	3132	3226	1.537	1.575
129.0	3069	3160	1.516	1.553
130.0	3006	3096	1.494	1.531
131.0	2946	3033	1.473	1.510
132.0	2886	2971	1.452	1.488
133.0	2828	2912	1.431	1.467
134.0	2772	2853	1.411	1.447
135.0	2716	2796	1.391	1.426
136.0	2662	2740	1.371	1.406
137.0	2610	2685	1.351	1.385
138.0	2558	2632	1.331	1.365
139.0	2508	2580	1.312	1.346
140.0	2458	2529	1.293	1.326
141.0	2410	2479	1.274	1.307
142.0	2363	2431	1.256	1.288
143.0	2317	2383	1.237	1.269
144.0	2272	2336	1.219	1.251
145.0	2228	2291	1.201	1.233
146.0	2185	2246	1.184	1.215
147.0	2143	2203	1.166	1.197
148.0	2101	2160	1.149	1.179
149.0	2061	2119	1.132	1.162
150.0	2022	2078	1.115	1.145
151.0	1983	2039	1.099	1.128
153.0	1909	1962	1.066	1.095
155.0	1837	1888	1.035	1.063
157.0	1769	1818	1.004	1.031
159.0	1704	1750	0.975	1.001
161.0	1641	1685	0.946	0.971
163.0	1581	1624	0.917	0.942
165.0	1524	1564	0.890	0.915
167.0	1468	1508	0.864	0.887
169.0	1416	1453	0.838	0.861
171.0	1365	1401	0.813	0.835

Table 12: Bearing Temp., Oil Temp. and Compressor Discharge Temp.

Temp F	Min Res	Max Res	Min Vterm	Max Vterm
173.0	1316	1351	0.789	0.810
175.0	1270	1303	0.765	0.786
177.0	1225	1257	0.742	0.763
179.0	1182	1213	0.720	0.740
181.0	1141	1170	0.699	0.718
183.0	1102	1130	0.678	0.697
185.0	1064	1091	0.658	0.676
187.0	1027	1053	0.638	0.656
189.0	992	1017	0.619	0.636
191.0	959	983	0.601	0.617
193.0	926	949	0.583	0.599
195.0	895	917	0.565	0.581
197.0	865	887	0.549	0.564
199.0	837	857	0.532	0.547
201.0	809	829	0.517	0.531

Table 13: Auxiliary HR Ent. and Condenser Ent. and Leaving Water Temp.

A2 Analog Input
Thermistor Accuracy = 0.54 ° F from 15 to 140 ° F
Type U Thermistor Temperature Versus Resistance and Terminal Voltage Table for a pullup resistor of 6980 Ohms.
Used to sense temperatures at the following point:
1. Auxiliary HR Entering and Leaving Water Temp. Pair - CVHE/F
2. Condenser Ent. and Leaving Water Temp. Pair - CVHE/F.

Temp F	Min Res	Max Res	Min Vterm	Max Vterm
60.0	15120	15546	3.404	3.441
61.0	14735	15148	3.376	3.413
62.0	14361	14762	3.348	3.385
63.0	13998	14388	3.319	3.357
64.0	13645	14024	3.291	3.329
65.0	13303	13670	3.262	3.300
66.0	12970	13327	3.233	3.272
67.0	12646	12993	3.204	3.243
68.0	12332	12669	3.175	3.214
69.0	12026	12354	3.146	3.185
70.0	11729	12048	3.117	3.156
71.0	11441	11750	3.088	3.127
72.0	11160	11461	3.058	3.098
73.0	10887	11180	3.029	3.068
74.0	10622	10907	2.999	3.039
75.0	10364	10641	2.970	3.010
76.0	10113	10383	2.940	2.980
77.0	9870	10131	2.911	2.951
78.0	9632	9887	2.881	2.921
79.0	9402	9649	2.851	2.891
80.0	9177	9418	2.822	2.862
81.0	8959	9193	2.792	2.832
82.0	8746	8974	2.763	2.803
83.0	8539	8761	2.733	2.773
84.0	8338	8554	2.704	2.744
85.0	8142	8353	2.674	2.714
86.0	7952	8156	2.645	2.685
87.0	7766	7965	2.615	2.655
88.0	7586	7779	2.586	2.626
89.0	7410	7599	2.557	2.597

Table 13: Auxiliary HR Ent. and Condenser Ent. and Leaving Water Temp.

Temp F	Min Res	Max Res	Min Vterm	Max Vterm
90.0	7239	7422	2.528	2.567
91.0	7072	7251	2.498	2.538
92.0	6910	7084	2.470	2.509
93.0	6751	6921	2.441	2.480
94.0	6597	6763	2.412	2.452
95.0	6447	6608	2.383	2.423
96.0	6301	6458	2.355	2.394
97.0	6159	6312	2.326	2.366
98.0	6020	6169	2.298	2.337
99.0	5885	6030	2.270	2.309
100.0	5754	5895	2.242	2.281
101.0	5625	5763	2.214	2.253
102.0	5500	5634	2.187	2.225
103.0	5378	5509	2.159	2.198
104.0	5260	5387	2.132	2.170
105.0	5144	5268	2.105	2.143
106.0	5031	5152	2.078	2.116
107.0	4921	5039	2.051	2.089
108.0	4813	4929	2.025	2.062
109.0	4709	4821	1.999	2.036
110.0	4607	4716	1.972	2.009
111.0	4507	4614	1.946	1.983
112.0	4410	4514	1.921	1.957
113.0	4315	4417	1.895	1.931
114.0	4223	4322	1.870	1.906
115.0	4133	4230	1.845	1.880
116.0	4045	4139	1.820	1.855
117.0	3959	4051	1.795	1.830
118.0	3876	3965	1.771	1.806
119.0	3794	3882	1.747	1.781
120.0	3714	3800	1.723	1.757
121.0	3636	3720	1.699	1.733
122.0	3561	3642	1.676	1.709
123.0	3487	3566	1.653	1.686
124.0	3415	3492	1.630	1.662
125.0	3345	3420	1.607	1.640
126.0	3276	3350	1.585	1.617

Table 13: Auxiliary HR Ent. and Condenser Ent. and Leaving Water Temp.

Temp F	Min Res	Max Res	Min Vterm	Max Vterm
127.0	3209	3281	1.562	1.594
127.0	3209	3281	1.562	1.594
127.0	3209	3281	1.562	1.594
128.0	3144	3214	1.540	1.572
129.0	3080	3148	1.519	1.550
130.0	3017	3084	1.497	1.528
131.0	2956	3022	1.476	1.507
132.0	2897	2961	1.455	1.486
133.0	2839	2901	1.434	1.464
134.0	2782	2843	1.414	1.444
135.0	2726	2786	1.393	1.423
136.0	2672	2730	1.373	1.403
137.0	2619	2676	1.354	1.383
138.0	2567	2623	1.334	1.363
139.0	2517	2571	1.315	1.343
140.0	2467	2520	1.296	1.324

Table 14: Outdoor Air Temp.

A2 Analog Input
Thermistor Accuracy = 0.90 ° F from -10 to 0 ° F
Thermistor Accuracy = 0.54 ° F from 0 to 70 ° F
Thermistor Accuracy = 1.80 ° F from 70 to 150 ° F
Type U Thermistor Temperature Versus Resistance and Terminal Voltage Table for a pullup resistor of 6980 Ohms.
Used to sense temperatures at the following point:
1. Outdoor Air Temp. - CVHE/F/G

Temp F	Min Res	Max Res	Min Vterm	Max Vterm
-10.0	117759	124893	4.713	4.729
-5.0	99928	105882	4.666	4.685
0.0	86006	89016	4.617	4.630
5.0	73347	75873	4.557	4.573
10.0	62706	64832	4.490	4.508
15.0	53738	55532	4.416	4.435
20.0	46161	47678	4.333	4.355
25.0	39742	41029	4.242	4.266
30.0	34292	35386	4.143	4.169
35.0	29713	30628	4.037	4.065
40.0	25830	26611	3.923	3.953
45.0	22512	23180	3.803	3.835
50.0	19668	20242	3.675	3.709
55.0	17225	17718	3.542	3.578
60.0	15120	15546	3.404	3.441
65.0	13303	13670	3.262	3.300
70.0	11367	12410	3.083	3.190
75.0	10049	10956	2.935	3.044
80.0	8903	9692	2.787	2.896
85.0	7903	8592	2.640	2.748
90.0	7029	7632	2.494	2.601
95.0	6264	6792	2.350	2.456
100.0	5592	6056	2.210	2.313
105.0	5002	5410	2.074	2.174
110.0	4482	4841	1.943	2.039
115.0	4022	4340	1.816	1.909
120.0	3616	3897	1.696	1.784
125.0	3259	3506	1.581	1.665
130.0	2941	3161	1.473	1.552
135.0	2658	2854	1.371	1.446
140.0	2406	2581	1.274	1.345
145.0	2181	2337	1.184	1.250
150.0	1980	2120	1.099	1.161

Table 15: Saturated Evap. Refrigerant Temp.

A4 Analog Input
Type U Thermistor Temperature Versus Resistance and Terminal Voltage Table for a pullup resistor of 38300 Ohms.
Used to sense temperatures at the following point:
1. Saturated Evap. Refrigerant Temp. - CVHE/F/G

Temp F	Min Res	Max Res	Min Vterm	Max Vterm
10.0	62706	64832	3.084	3.129
11.0	60788	62843	3.047	3.093
12.0	58935	60921	3.011	3.057
13.0	57144	59063	2.974	3.020
14.0	55412	57268	2.937	2.984
15.0	53738	55532	2.900	2.947
16.0	52119	53854	2.863	2.910
17.0	50554	52231	2.826	2.873
18.0	49040	50663	2.789	2.836
19.0	47577	49145	2.752	2.799
20.0	46161	47678	2.715	2.762
21.0	44791	46259	2.678	2.725
22.0	43466	44886	2.641	2.688
23.0	42183	43558	2.604	2.651
24.0	40943	42273	2.567	2.614
25.0	39742	41029	2.530	2.577
26.0	38580	39826	2.493	2.540
27.0	37455	38661	2.457	2.503
28.0	36367	37534	2.420	2.467
29.0	35312	36442	2.384	2.430
30.0	34292	35386	2.347	2.394
31.0	33304	34363	2.311	2.357
32.0	32358	33365	2.276	2.321
33.0	31448	32423	2.240	2.286
34.0	30566	31511	2.206	2.250
35.0	29713	30628	2.171	2.216
36.0	28886	29773	2.137	2.181
37.0	28086	28944	2.102	2.146
38.0	27310	28142	2.069	2.112
39.0	26559	27364	2.035	2.078

Table 15: Saturated Evap. Refrigerant Temp.

Temp F	Min Res	Max Res	Min Vterm	Max Vterm
40.0	25830	26611	2.002	2.045
41.0	25125	25881	1.969	2.012
42.0	24441	25174	1.936	1.979
43.0	23778	24489	1.904	1.946
44.0	23135	23824	1.872	1.913
45.0	22512	23180	1.840	1.881
46.0	21908	22556	1.809	1.850
47.0	21322	21950	1.778	1.818
48.0	20754	21363	1.747	1.787
49.0	20203	20794	1.717	1.756
50.0	19668	20242	1.687	1.726
51.0	19150	19706	1.657	1.696
52.0	18647	19186	1.628	1.666
53.0	18158	18682	1.599	1.637
54.0	17685	18193	1.570	1.608
55.0	17225	17718	1.542	1.579
56.0	16779	17257	1.515	1.551
57.0	16346	16810	1.487	1.523
58.0	15925	16376	1.460	1.496
59.0	15517	15955	1.434	1.469
60.0	15120	15546	1.407	1.442
65.0	13303	13670	1.282	1.314
70.0	11367	12410	1.140	1.222
75.0	10049	10956	1.036	1.111
80.0	8903	9692	0.940	1.009
85.0	7903	8592	0.853	0.915
90.0	7029	7632	0.773	0.830
95.0	6264	6792	0.701	0.753
100.0	5592	6056	0.635	0.682
105.0	5002	5410	0.576	0.619
110.0	4482	4841	0.523	0.561
115.0	4022	4340	0.474	0.509
120.0	3616	3897	0.430	0.462

Table 16: Compressor Motor Winding Temp.

A6 Analog Input
Motor Winding RTD Temperature Versus Resistance and Terminal Voltage Table for a pullup resistor of 1000 Ohms.
Used to sense temperatures at the following point:
1. Compressor Motor Winding Temp. #1- CVHE/F/G
2. Compressor Motor Winding Temp. #2 CVHE/F/G

Temp F	Nom. Resistance	Nom. Vterm
50.0	70.4616	0.3322
55.0	71.3567	0.3361
60.0	72.2589	0.3400
65.0	73.1679	0.3439
70.0	74.0839	0.3479
75.0	75.0067	0.3519
80.0	75.9363	0.3559
85.0	76.8727	0.3600
90.0	77.8158	0.3640
95.0	78.7656	0.3681
100.0	79.7219	0.3722
105.0	80.6848	0.3763
110.0	81.6542	0.3805
115.0	82.6301	0.3846
120.0	83.6124	0.3888
125.0	84.6011	0.3930
130.0	85.5960	0.3973
135.0	86.5972	0.4015
140.0	87.6047	0.4058
145.0	88.6183	0.4100
150.0	89.6380	0.4143
155.0	90.6638	0.4187
160.0	91.6955	0.4230
165.0	92.7333	0.4273
170.0	93.7770	0.4317
175.0	94.8265	0.4361
180.0	95.8818	0.4405
185.0	96.9430	0.4449
190.0	98.0098	0.4493
195.0	99.0823	0.4538
200.0	100.1604	0.4582
205.0	101.2441	0.4627
210.0	102.3333	0.4672
215.0	103.4280	0.4717
220.0	104.5281	0.4762
225.0	105.6336	0.4807
230.0	106.7444	0.4852
235.0	107.8604	0.4898
240.0	108.9817	0.4944
245.0	110.1082	0.4989
250.0	111.2398	0.5035
255.0	112.3765	0.5081
260.0	113.5182	0.5127
265.0	114.6648	0.5173
270.0	115.8164	0.5220

Transducer
Checkout Procedure

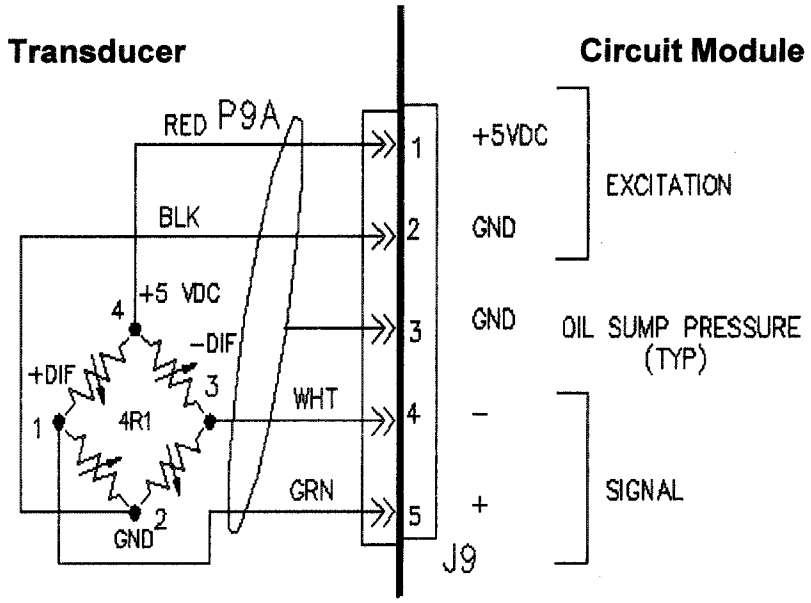

QUICK TEST PROCEDURE FOR MEDIAMATE WATER PRESSURE TRANSDUCER

1. Set regulated power supply to 5 VDC. Connect 5 VDC to Pins 2 and 4 on the Transducer.

2. Check zero balance at ambient pressure by attaching Transducer lead wires of a Digital Volt Meter to Pin 1 and Pin 3 of the Transducer.

Pin 4:	+ Excitation	(Supply)	> Connect 5 VDC Power Supply
Pin 2:	- Excitation	(Supply)	
Pin 1:	+ Signal		> Connect Volt Meter
Pin 3:	- Signal		

(A cable assembly with a mating Hirschmann connector could be made up and used for all tests.)
Allow transducer to stabilize under power (approximately 15 - 30 seconds).

Readings:

1. Transducer used for Condenser Pressure, Oil Discharge Pressure and Oil Sump.
   Trane Part Number TDR0272. A good Transducer reading is: 15 mV ± 1mV

2. Evaporator and Condenser Water Flow Transducer and Part Number TDR0274
   A good Transducer reading is: 0 mV ± 1mV.

4. Insert a Q-Tip or small wooden dowel into the pressure port and gently apply force to the diaphragm and watch the DVM for a corresponding change in output.

Starter
Contactor Sequence

Implemented in CTV Upgrade 2, Phase C release X13650453-07

Timing requirements to operate the "Stop", "Start", "Short", "Transition", and "Run" contact closure outputs are shown below. Prior to closing the "Short" contact, the transition complete input shall be verified to be open, otherwise an MMR diagnostic shall be generated.

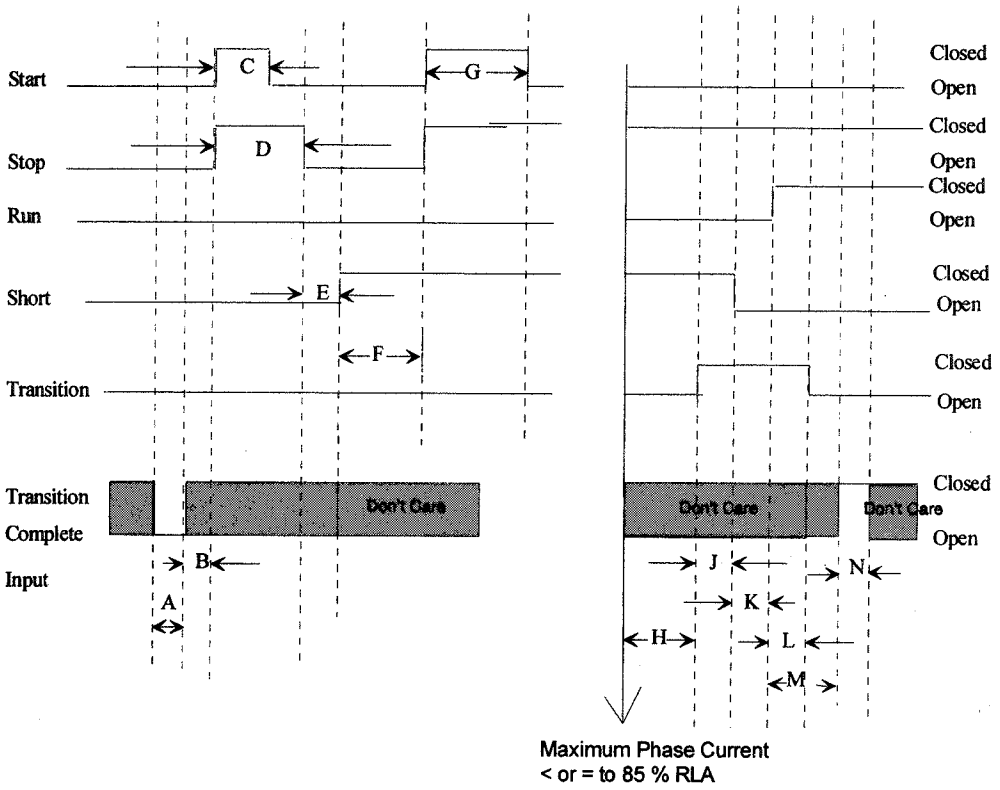

Interval	Minimum	Maximum	Units	Actual
A. (Test for transition complete input open)				120 to 180 msec
B. (Just delay time)				20 msec
C. Close 1M (2K1) Contactor and test for no current.) (Starter integrity test)				500 msec
D.				1 sec
E. (Open 1M (2K1)				200 msec
F. (Close Shorting Contactor (2K3) and test for no current, then wait for Start command) (Starter integrity test)	100 (1)			1.0 sec (Min.)
G. (Close 1M (2K1))	2.0		sec	2 sec
H. (Wait 1.5 sec after phase currents drop to 85%)	1	2	sec	1.5 sec
J. (Close 2K4 Transition Contactor)	85	100	msec	100 msec
K. (Open S (Shorting) Contactor	250	300	msec	260 msec
L. (Close 2M (2K2) Contactor)				140 msec
M. (Wait to look for Transition complete)	(2)		msec	2.32 to 2.38sec
N. (Filtering time on Transition complete input)	(2)		msec	120 to 180 sec

(1) This timer period must long enough to verify the absence of phase currents caused by the closing of the "Short" contacts.

(2) The sum of intervals M and N are designed to be 2.5 seconds.

Note: The transition complete contact closure is expected to be an auxiliary contact to the "Run Contactor" (2K2).

Starter Module
CT Voltage and Currents

There are two configurations of CT's used. One is the single stage, the other is the dual stage. A different transfer function exists depending on whether a single or dual stage configuration is used. The two configurations appear the same to the UCP2 by normalizing each. Thus a different equation is used to take the actual line current and convert it to a common 'Normalized Line Current' that may be used in Table 19. Note that the 'Terminal Volts' is the AC voltage seen at the current input terminal pairs of the Starter module. These pairs are J5-1,2, J5-3,4 and J5-5,6.

For a single stage CT:

$$\text{Normalized Line Current (\%)} = \frac{\text{Actual Line Current(Amps)*100\%*Primary Turns}}{\text{CT Rated Primary Current (Amps)}}$$

For a two stage CT:

$$\text{Normalized Line Current (\%)} = \frac{\text{Actual Line Current(Amps)*138.89\%*Primary Turns}}{\text{Line CT Rated Primary Current (Amps)}}$$

Table 19 - Current Input Transfer Function

Normalized Line Current %	Terminal Input Current (mA RMS)	Terminal Volts (V RMS) (± 5%)	Normalized Line Current %	Terminal Input Current (mA RMS)	Terminal Volts (V RMS) (± 5%)
0	0	0	115	115	4.23
5	5	1.19	120	120	4.36
10	10	1.37	125	125	4.49
15	15	1.53	130	130	4.62
20	20	1.67	135	135	4.75
25	25	1.81	140	140	4.88
30	30	1.95	145	145	5.02
35	35	2.09	150	150	5.15
40	40	2.23	160	160	5.41
45	45	2.36	170	170	5.67
50	50	2.50	180	180	5.94
55	55	2.63	190	190	6.20
60	60	2.77	200	200	6.46
65	65	2.90	210	210	6.72
70	70	3.03	220	220	6.99
75	75	3.17	230	230	7.25
80	80	3.30	240	240	7.51
85	85	3.43	250	250	7.77
90	90	3.57	260	260	8.03
95	95	3.70	270	270	8.29
100	100	3.83	280	280	8.56
105	105	3.96	290	290	8.82
110	110	4.10	300	300	9.08

TRANE

General Service Bulletin

CVHE-SB-32A

Library	**Service Literature**
Product Section	**Refrigeration**
Product	**Centrifugal Liquid Chiller, Water-Cooled**
Model	**CVHE, F, G**
Literature Type	**General Service Bulletin**
Sequence	**32A**
Date	**August 1999**
File No.	**SV-RF-CVHE-SB-32A**
Supersedes	**CVHE-SB-32**

Literature History: CVHE-SB-32 (8/95)—Original Issue of Bulletin.

Subject: Troubleshooting and Checkout Procedures For CVHE/F/G Units with UCP2 Controls

Introduction:

The purpose of this service bulletin is to provide troubleshooting information on CVHE/F/G Centrifugal Chillers with UCP2 Control Panel. Additional UCP2 information is found in the following manuals:

CVHE-OM-8, Operation/Maintenance Manual

CVHE-IN-9,10,11, Installation Manual

CVHE-W-8A, Wiring Manual

CVHE-CLD-1A, Clear Language Display Manual

Since the Trane Company has a policy of continuous product improvement, it reserves the right to change specifications and designs without notice. The installation and servicing equipment referred to into this booklet should be done by qualified experienced technicians.

Contents

General Troubleshooting Index 1

UCP2 Control Panel and Module Description 4

Unit Control Panel 4

UCP2 Control Panel and Module Description 6

Chiller Module 6
Circuit Module 6
Stepper Module 6
Starter Module 6
Purge Module 7
Local Clear Language Display 7
Remote Clear Language Display Panel and Remote Clear Language Display Interface Module 7
Options Module 7
Module Setpoints relating to the options module: 7
Tracer Communications Interface 7
Printer Interface Module 8
Secondary Printer Options 8
Duplex Control Module (DCM) 8

General Troubleshooting Information ... 9

Problem 1: AFD (adaptive frequency drive) diagnostics 9
Problem 2: Failure to accelerate or did not accelerate 9
Problem 3: Approach Temperature reads -40°F 9
Problem 4: Auto X-former starter: Runs (3) seconds and trips. Unit will not transition. 9
Problem 5: IGV BPI not found or low 9
Problem 6: Bearing Temperatures 1 and 2 Locations 10
Problem 7: Capacity Limited by High Current when the phase current as read from the Compressor report reads zero amps. Getting this message during the run mode. 10
Problem 8: Current Overload 10
Problem 9: Chiller Loss of Communication with circuit module and IGV overdriving close 10
Problem 10: Check Clock (IFW) Informational Warning Diagnostics. On a loss of power, the clock does not keep time if there is an extended power loss (greater than 15 seconds) 10
Problem 11: Chiller Loss of Communication with Starter and the IGV calibrates. 11
Problem 12: Chiller Loss of Communication with Starter or Circuit Loss of Communication with Chiller Diagnostics 11
Problem 13: Clear Language Display won't go into Demo mode 11
Problem 14: Communication diagnostic; None or Degraded Communications 11
Problem 15: Loss of Communication with Starter Diagnostics at Startup with no Inlet Guide Vane action. Mode is "Resetting" and can move through the menus 11
Problem 16: Loss of Communication or Intermittent Communication between any of the modules. (Chiller, Starter, Tracer, Circuit, Stepper, Options, Purge, etc.) 12
Problem 17: No Communication, on a power up, get message "No Communication, Data Not Valid" and no action in the IGV. 13
Problem 18: No Communication, on a power up, get message "No Communication, Data Valid" but the Inlet Guide Vane calibrates 13
Problem 19: Starter Loss of Communication with Chiller. No other diagnostic 13
Problem 20: TCI Loss of Communication with Chiller. 13
Problem 21: High compressor Discharge temperature, The compressor discharge temperature exceeded 200°F. 13
Problem 22: Cond. Pressure 2-10 VDC output will not work 14
Problem 23: Condenser Pressure Delta-pressure output does not show up. 14
Problem 24: Cond. Refrig. Temp. Sensor diagnostic, when the displayed Cond. Refrig. Temp. is reading fine 14
Problem 25: Condenser and Evaporator entering and leaving water temps. changing rapidly and reading incorrectly, i.e. -25°F to 900°F. 14
Problem 26: Condenser Water Flow lost diagnostic. Unit will not restart until manually reset. 14
Problem 27: Capacity limited by current limit 14
Problem 28: Custom menu - Unwanted items that you did not install and you cannot remove 14

Problem 29: Display is locked up. No communication, Data Not Valid Diagnostic. 15
Problem 30: Display on the CLD is flashing. 15
Problem 31: External Chilled Water Setpoint Problems. 15
Problem 32: External Current Limit setpoint does not work. 16
Problem 33: Fault Relay open on an AFD (air cooled adaptive frequency Drive) 16
Problem: 34 Fault relay open on Solid State Starter (SSS) 16
Problem 35: Free cooling (FC) operation problems. 16
Problem 36: Evaporator Water Temperatures are reversed (2 pass units only). 17
Problem 37: Low Evaporator refrigerant temperature 17
Problem 38: 2F1, 2F2 and 2F3 Fuses blow - On 200-575 volt units when switching the starter disconnect from OPEN to CLOSED. 17
Problem 39: GPM/Tonnage option problems 17
Problem 40: High Vacuum Lockout 17
Problem 41: Hot Gas Bypass (HGBP) Does Not Work. 18
Problem 42: Ice Making 18
Problem 43: IGV will not move in the Service Test Manual mode. 19
Problem 44: IPC Buffer Diagnostics 19
Problem 45: KW reads high by a factor of 3, with optional PT installed. 19
Problem 46: Loading Problems 19
Problem 47: Memory Error 20
Problem 48: Momentary Power Loss (MPL) 20
Problem 49: Motor winding temperatures changing rapidly and randomly 21
Problem 50: Differential Oil Pressure Calibration Diagnostic following post lube. Secondary problem may be the oil pump will not shut off after post lube. 21
Problem 51: Differential Oil Pressure 21
Problem 52: Oil temperature High. 22
Problem 53: Oil temperature Low (Startup) 22
Problem 54: Low Oil Temperature (Running) 22
Problem 55: Enhanced oil temperature function not working. 22
Problem 56: Oil Pump Discharge Pressure Sensor Diagnostic and Oil Pressure Calibration. Corrective Action. 22
Problem 57: Over/Under Voltage Diagnostic on Startup. 23
Problem 58: Phase Loss 23
Problem 59: Severe Phase Unbalance 25
Problem 60: Phase Reversal 25
Problem 61: Printer will not work. 25
Problem 62: Purge Compressor will not run in the manual "ON" mode. 26
Problem 63: Sensor errors 26
Problem 64: Transition resistors stay in too long. 26
Problem 65: Setpoints are not being stored, service tests will not work and we are calling many diagnostics on the CLD. 26
Problem 66: Starter Contactor Interrupt Failure Diagnostic when powering up the UCP. 27
Problem 67: Starter Dry Run Test Diagnostic upon entering a Starter Dry Run Test. 27
Problem 68: Starter Dry Run will not work. 27
Problem 69: Starter Fault type 1, 2 or 3 27
Problem 70: Stepper motor is humming. 27
Problem 71: Extended surge 28
Problem 72: Pressure Transducer shift in calibration. Diagnostics will be sensor calibration related such as sensor failure or oil pressure sensor calibration. 28
Problem 73: Rapid Time of Day Scrolling or Date jumps back one day. 28
Problem 74: Unit did not Transition diagnostics. 28
Problem 75: Tracer Diagnostics e.g.,Tracer loss of comm with options, starter, etc. as well as other Tracer related diagnostics. 29
Problem 76: Unit Tons Read-out on CLD does not work. 29
Problem 77: Unknown diagnostics 1217 informational warning. 29

CVHE/F/G Trim Balance Procedure..... 30
Run Procedure: 30
Start sequence: 30
Stop/Reset sequence 30

Sensor And Transducer Operating Ranges 31

Temporary Forced Unload Setup 32

Communications Test..... 33

Troubleshooting IPC Communication Diagnostics 34
For a "No Communication, Data Not Valid" message on the Clear Language Display: 34
For a "Loss of comm with Stepper" diagnostic: 34
Heat Sink Temperature 35

Module Compatibility 36
UCP2 Module Compatibility 36

Description of UCP2 Options 37
1. Tracer Communications Interface Module Com 3 Module) 37
2. Tracer Communications Interface Module (Com 4 Module) 37
3. Remote Clear Language Display Module 37
4. Options Module 37
5. Printer Interface Module 37
6. Chilled Water Reset Outdoor Air Temperatures 38
7. Water Pressure Sensors For Evap And Cond System Pressure Less Than 150 Psig. 38
8. Bearing Oil Temperature Sensors 38
9. Phase Voltage Sensors 38
10. Enhanced Condenser Limit 38
11. Discharge Temp Sensor 38
12. Starter By Others 38

UCP2 Modules 39
Chiller Module 39
Circuit Module 40
Input/Output Module 41
Options Module 42
Purge Module 43
Starter Module Values 44
Stepper Module 45
Duplex Module 46

Module Dip Switch Settings 47
UCP2 Board Dip Switch Settings 47
Chiller Module 47
Options Module 47
Tracer COM 3 47
Tracer COM 4 47
IPC Buffer 47
Duplex Control Module (DCM) 48
Printer 48

Diagnosing A Non-Working Stepper Module 50
Method to Troubleshoot a UCP2 Stepper Module and Actuator 50
I. Overview 50
II. Quick Test of Stepper Board 50
II.CheckStepperMotorandWiringforShortsandOpens 52
IV. Motor Voltages for CTV Stepper Motor 54

Procedures For Module Set-Up 55
External Current Limit Setpoint 55
Refrigerant Monitor Input 55
% RLA Output 55
External Chilled Water Setpoint 56
External Auto-Stop: 57

Analog Input Table Abbreviations 59

Pressure vs Voltage for Oil Pressures 59
60

Pressure vs Voltage for Water Pressures 61

Purge Compressor Suction Temp. 64
Bearing Temp., Oil Temp. and Compressor Discharge Temp. 72

Information on the Oil Pressure Sensor Calibration Diagnostic 83

Transducer Checkout Procedure 84
Quick Test Procedure For Mediamate Water Pressure Transducer 84

Starter Contactor Sequence 85

Starter Module CT Voltage and Currents 87
-Current Input Transfer Function 87

Troubleshooting The Percent Condenser Output: 89
From UCP2 Initial Release (July 93) to 10/21/96 Software Release: 89
As of the 10/21/96 Software Release Including Fast-pak and UCP2 Enhancements: 90
Refrigerant Differential Pressure Indication 90

External Current Limit Setpoint 91

Percent RLA Output 93

Current Overload Protection: 94

Evaporator Refrigerant Temperature Limit 95

Condenser Refrigerant Pressure Limit 96

Head Relief Request 97

Free Cooling Relay Checkout 98

Hot Gas Bypass 100

Install and Enable 101
1) HGBP mode, IGV Target:% 102
2) Guide Vane Closed Travel Stop:% 102
3) Maximum HGBP Time: 102
Hot Gas Bypass Control Algorithm 102

Ice Machine Control 103

Recommended Wire Lengths for PTs 106

Checking for an Open, Burnt, or Shorted CentraVac Motor Winding 108

Information on Tracer 108
LEDS ..... : 109
Dip Switches: 109
UCP2/Tracer Compatibility List: 109
UCP2 Clock: 110
The Year 2000: 110

Chilled Water Reset 111

Using the Equation for calculating CWR for Outdoor Air Temp 114

Information on the Printer Option..... 119

Switch Bank 1 120
Switch Bank 2 121

General Troubleshooting Index

Problem Description	No.	Page
AFD (adaptive frequency drive) diagnostics	1	9
Failure to accelerate or did not accelerate	2	9
Approach Temperature reads -40°F.	3	9
Auto X-former Starter: Runs (3) seconds and trips. Unit will not transition.	4	9
IGV BPI not found or low	5	9
Bearing Temperatures 1 and 2 Locations.	6	10
Capacity Limited by High Current when the phase current as read from the Compressor report reads zero amps. Getting this message during the run mode.	7	10
Current Overload	8	10
Chiller Loss of Communication with Circuit module and IGV overdriving close.	9	10
Check Clock (IFW) Informational Warning Diagnostics. On a loss of power the clock does not keep time, if there is an extended power loss (greater than 15 seconds).	10	10
Chiller Loss of Communication with Purge and the IGV calibrates	11	11
Circuit Loss of Communication with Starter or Circuit Loss of Communication with Chiller Diagnostics	12	11
Clear Language Display won't go into Demo mode.	13	11
Communication diagnostic; none or degraded communications.	14	11
Loss of Communication with Starter Diagnostics at Startup with no Inlet Guide Vane action. Mode is "Resetting" and can move through the menus.	15	11
Loss of Communication or Intermittent Communication between any of the modules. (chiller, starter, tracer, circuit, Steeper, options, purge, etc.)	16	12
No Communication, on a power up, get message "No Communication, Data Not Valid" and no action in the IGV.	17	13
No Communication, on a power up, get message "No Communication, Data Not Valid" but the Inlet Guide Vane calibrates.	18	13
Starter Loss of Communication with Chiller. No other diagnostic.	19	13
TCI Loss of Communication with Chiller.	20	13
High compressor Discharge temperature The compressor discharge temperature exceeded 200°F.	21	13
Cond. Pressure 2-10 VDC output will not work.	22	14
Condenser Pressure Delta-pressure output does not show up.	23	14
Cond. Refrig. Temp. Sensor diagnostic, when the displayed Cond. Refrig. Temp. is reading fine.	24	14
Condenser and Evaporator entering and leaving water temps. changing rapidly and reading incorrectly, i.e. -25° F to 900°F.	25	14
Condenser Water Flow lost diagnostic. Unit will not restart until manually reset.	26	14
Capacity limited by current limit	27	14

Custom menu - Unwanted items that you did not install and you cannot remove	28	14
Display is locked up. No communication, Data Not Valid Diagnostic.	29	15
Display on the CLD is flashing.	30	15
External Chilled Water Setpoint Problems.	31	15
External Current Limit setpoint does not work.	32	16
Fault Relay open on an AFD (air cooled adaptive frequency Drive)	33	16
Fault relay open on SSS	34	16
Free cooling operation problems.	35	16
Evaporator Water Temperatures are reversed. 2 pass units only.	36	17
Low Evaporator refrigerant temperature	37	17
2F1, 2F2 and 2F3 Fuses blow - On 200-575 volt units when switching the starter disconnect from OPEN to CLOSED.	38	17
GPM/Tonnage option operation problems	39	17
High Vacuum Lockout	40	17
Hot Gas Bypass Does Not Work.	41	18
Ice Making	42	18
IGV will not move in the Service Test Manual mode.	43	19
IPC Buffer Diagnostics	44	19
KW reads high by a factor of 3, with optional PT installed.	45	19
Loading Problems	46	19
Memory Error	47	20
Momentary Power Loss	48	20
Motor winding temperatures changing rapidly and randomly.	49	21
Differential Oil Pressure Calibration Diagnostic following post lube. Secondary problem may be the oil pump will not shut off after post lube.	50	21
Differential Oil Pressure	51	21
Oil temperature High.	52	22
Oil temperature Low (Startup)	53	22
Low Oil Temperature (Running)	54	22
Enhanced oil temperature function not working.	55	22
Oil Pump Discharge Pressure Sensor Diagnostic and Oil Pressure Calibration. Corrective Action.	56	22
Over/Under Voltage Diagnostic on Startup.	57	23
Phase Loss	58	23
Severe Phase Unbalance	59	25
Phase Reversal	60	25
Printer will not work.	61	25
Purge Compressor will not run in the manual "ON" mode.	62	26
Sensor errors	63	26
Transition resistors stay in too long.	64	26

Setpoints are not being stored, service tests will not work and we are calling many diagnostics on the CLD.	**65**	**26**
Starter Contactor Interrupt Failure Diagnostic when powering up the UCP.	**66**	**27**
Starter Dry Run Test Diagnostic upon entering a Starter Dry Run Test.	**67**	**27**
Starter Dry Run will not work.	**68**	**27**
Starter Fault type 1, 2 or 3	**69**	**27**
Stepper motor is humming.	**70**	**27**
Surge extended	**71**	**28**
Pressure Transducer shift in calibration. Diagnostics will be sensor calibration related such as sensor failure or oil pressure sensor calibration.	**72**	**28**
Rapid Time of Day Scrolling or Date jumps back one day.	**73**	**28**
Unit did not Transition diagnostics.	**74**	**28**
Tracer Diagnostics e.g., tracer loss of comm with options, starter, etc. as well as other Tracer related diagnostics.	**75**	**29**
Unit Tons Read-out on CLD does not work.	**76**	**29**
Unknown diagnostics 1217 informational warning.	**77**	**29**

UCP2 Control Panel and Module Description

Unit Control Panel

Safety and operating controls are housed in the UCP2 Unit Control Panel, the Starter Panel and the Purge

Control Panel (Control Panel layout is illustrated in Figure 1).

The UCP2 control consists of a modular design partitioned by major function or group of functions. All modules communicate with each other through the IPC circuit.

Major components within each of these control groups are described below.

Unit-mounted temperature sensors, pressure transducers and functional switches provide analog and binary inputs to the various modules.

The "microprocessor-based" modules described are shown below. All connections to the modules are made with pluggable phoenix connectors.

Figure 1
UCP2 Control Panel

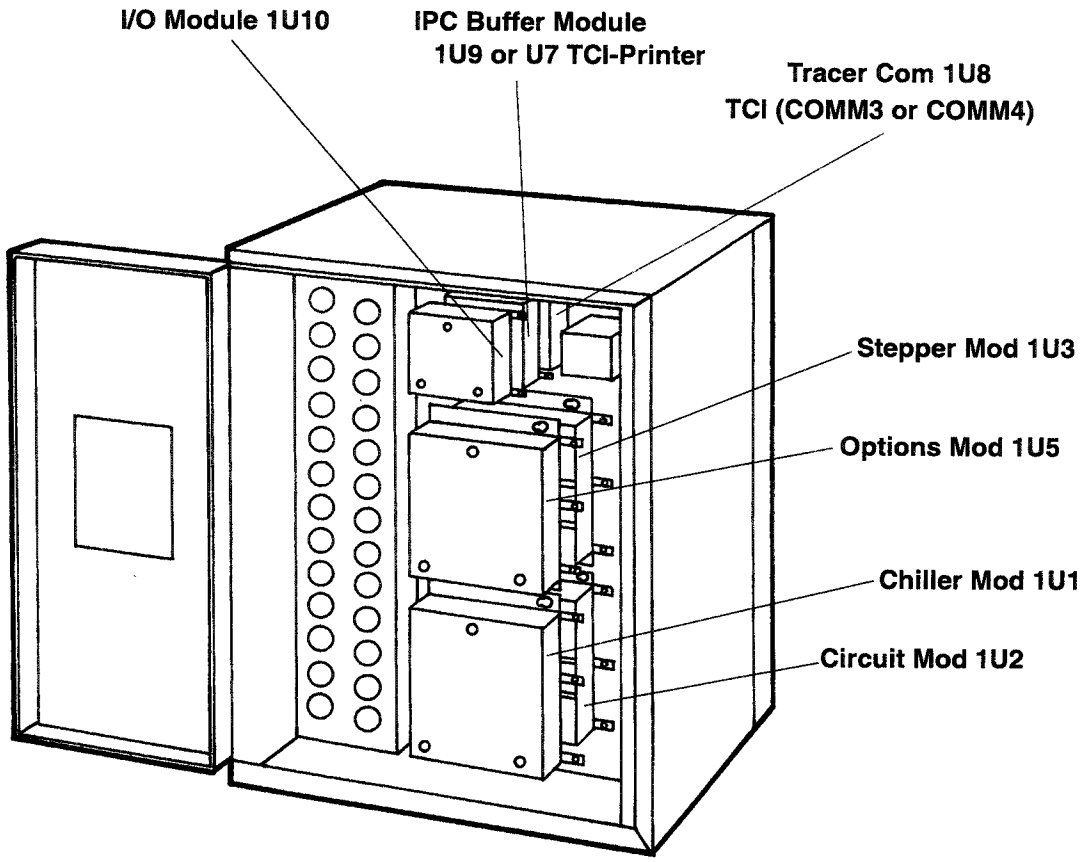

UCP2 Control Panel and Module Description

Chiller Module

The Chiller module is the Master-of-the-Chiller communicating commands to other modules and collecting data/status/diagnostic information from other modules over the IPC (Interprocessor Communications Link). The Chiller module performs the leaving chilled water temperature and limit control algorithms arbitrating capacity against any operating limit the chiller may find itself working against. The Chiller module checks for valid setpoints and contains non-volatile memory (NOVRAM), to retain them on any power loss. Inputs and Outputs are chilled water system level such as, but not limited to, evaporator and condenser water temperatures, evaporator and condenser water pump control, status and alarm relays, and external auto/stop.

Circuit Module

The Circuit module serves as an input/output expander and is assigned inputs and outputs associated with the refrigerant and lubrication circuits. The Circuit module also receives a 4-2OmA signal from an external refrigerant monitor and converts the signal to ppm for display at the Clear Language Display.

Module Setpoints relating to the circuit module.

1. condenser refrigerant pressure output: (J7 1,2) 2-10 VDC; 2 V = 0 psia (14.7 psig); 10 V = 14.7 psia (29.7 psig)

2. Refrigerant monitor input. (J5 5,6) 4-20 mA input suitable for factory or field connection. 4-20 mA range is 0 to 100 ppm.

Stepper Module

The Stepper module is designed to drive the stepper motor inlet guide vane actuator on CenTraVac chillers. On CenTraVac chillers the Stepper module receives from the Chiller module the direction and distance to drive the inlet guide vanes and then generates the appropriate signals to operate the stepper motor. The Stepper module also has other I/O capabilities used to support functions on the stepper module and/or just I/O expansion. These are Evap. temperature, Cond. discharge, Bearing temperature and Cond. temperature.

Starter Module

The Starter module physically resides in the Compressor Motor Starter Panel providing control of the starter when starting, running and stopping the motor. The Starter module provides interface to and control of Y-Delta, X-Line, P-Reactor, A-Transformers, Solid State Starters and Trane® Adaptive Frequency Drive. The Starter module also provides protection to both the motor and the compressor in the form of running overload, phase reversal, phase loss, phase unbalance, momentary power loss, and compressor surge, in addition to others.

Purge Module

The Purge module provides control of the purge used on R-11 and R-123 low pressure CenTraVac models. The Purge module provides all the inputs and outputs to control the purge optimizing both purge and chiller efficiency. The Purge module resides in the purge control panel and communicates with the Chiller module over the IPC (Interprocessor Communications Link) uploading set points and downloading data and diagnostics.

Local Clear Language Display

The Local CLD (Clear Language Display) resides at the Chiller providing a display of chiller data and access to operator/serviceman controls, set points and chiller setup information. All information is stored in non-volatile memory in the Chiller module. The Local Clear Language Display and the Chiller module work together to display and store information requiring non-volatility.

Remote Clear Language Display Panel and Remote Clear Language Display Interface Module

As an option, the Remote Clear Language Display permits the operator to remotely operate 1-4 chillers. The Remote Clear Language Display Panel works like the Local Clear Language Display with two exceptions, (1) a Local Stop command takes precedence over all other remote or external devices, and (2) the Remote Clear Language Display's Custom Report and display language are independent of the Local Clear Language Display Panel.

Options Module

The Options module satisfies control or interface requirements for a number of options. Some of these options are stand alone, such as Generic BAS Interface; other options support either additions or modifications to the chiller itself, such as Free Cooling. Features supported by the Options module include Ice-Making, Heat Recovery, External Chilled Water Setpoint, and External Current Limit Setpoint.

Module Setpoints relating to the options module:

1. %RLA compressor output (J7 3,4) 2-10 VDC out; 2 VDC = 0% RLA; 10 VDC = 120% RLA

2. External current limit input (J7 11,12) 2-10 VDC or 4-20 mA in; The range is 40% to 120% RLA.

3. External chilled water setpoint. Input (J9 4,5) 2-10 VDC or 4-20 mA in; The range is 0 to 65°F.

Tracer Communications Interface

TCI COMM 3 is an optional module that provides a 1200 baud isolated communications link to TRACER.

TCI COMM 4 (Tracer Summit) is an optional module that provides a 9600 baud non-isolated link to Summit.

Printer Interface Module

The Printer Interface module provides a pre-formatted chiller log to a printer. The Printer Interface can be programmed via the Clear Language Display to print a chiller log on command, at the time of a diagnostic, and/or on a periodic basis. Each printed event is time and date stamped.

The *preferred* printer to be used is Okidata Microline 184 Turbo. Serial cables required are (DB25 male to DB9 Female). The maximum distance allowed between the printer module and the printer is 50 feet.

Secondary Printer Options

Epson: not all Epson printers support serial communications. For a low cost printer that does support serial communications, Epson recommends the LX810 Printer with the Serial interface option (C823032).

IBM ProPrinters: Use either the "2380' + or the "2390+' along with the Serial interface option "1363110".

Other: Any printer/computer with 232 capabilities should be capable interfacing with the TCI Printer module (allowing for different cables and jumper configurations).

Duplex Control Module (DCM)

Duplex control is accomplished by the Duplex Control module that resides in the downstream Unit Chiller "A". It's tasks are setpoint control (chilled water and current limit) and compressor staging. All other setpoints are controlled at each individual compressor UCP2 Clear Language Display panel. Each unit can be reset or stopped separately through each CLD. The dip switch setting on the board is ON-OFF-ON. IPC communication with the downstream chiller "A" panel connects to J1, 1 & 2. IPC communication with the upstream chiller "B" panel connects to J3, 1 & 2.

General Troubleshooting Information

Problem 1: AFD (adaptive frequency drive) diagnostics

Corrective Action:

1 Correctly input all AFD parameters called out and specified in the AFD Operation Maintenance manuals, such as AFDA-OM-1 and AFDB-OM-1.

2 Review and follow the specific trouble shooting sections of the appropriate drive.

Problem 2: Failure to accelerate or did not accelerate

Corrective Action:

1 Set the appropriate acceleration Timers 1 and 2 in machine configuration menu.

2 Set correct starter type in machine configuration menu.

3 Replace defective CTs.

4 Defective Starter module, ct input. Replace Starter module.

5 Defective IGV linkage.

6 Defective Stepper module.

7 Fast Restart. Change Starter to a X-13650453-16 or newer and Chiller modules. For X-13650450-15 or newer, reference Trane *CVHE-SB-46.*

Problem 3: Approach Temperature reads -40°F

Corrective Action:

1 A CLD X-13650448-04 or newer is required with a Chiller module X-13650450-04 or newer.

Problem 4: Auto X-former starter: Runs (3) seconds and trips. Unit will not transition.

Corrective Action:

1 Verify Starter module. If X-13650453-07 or later, it requires transition circuit.

2 No voltage on transition complete J4 circuit. Trace circuit path. Reference Trane *CVHE-SB-36.*

Problem 5: IGV BPI not found or low

Corrective Action:

1 BPI switch location may have changed. Reposition/calibrate BPI switch.

2 Defective BPI switch and/or wire.

3 Incorrect Stepper motor wiring.

4 Replace the Stepper module.

5 Correctly program the BPI maximum travel setpoint in service settings.

Problem 6: Bearing Temperatures 1 and 2 Locations.

Corrective Action:

1 Bearing temperature I (Stepper module J5-5, 6) goes to the front Journal bearing.

2 Bearing temperature 2 (Stepper module J5-7, 8) goes to the rear Thrust bearing.

Problem 7: Capacity Limited by High Current when the phase current as read from the Compressor report reads zero amps. Getting this message during the run mode.

Note: The Chiller module takes the three phase currents as sent by the Starter module, selects the highest one and limits based on this.

Corrective Action:

1 Check the phase currents as displayed in the Compressor Report.

2 Check the Active Current Limit Setpoint. It is possible it is a very low value or even zero amps is loaded in.

3 If the current limit source is the external current limit setpoint, check this input on the Options module.

Problem 8: Current Overload

Corrective Action:

1 Correctly program in the overload information in the machine configuration menu.

2 Defective CTs.

3 Check CT wiring and polarity.

4 Check for the correct number of turns through the CTs.

Problem 9: Chiller Loss of Communication with Circuit module and IGV overdriving close.

Corrective Action:

1 IPC to Circuit module disconnected or reversed.

2 Circuit module not powered.

3 Verify that a good ground exists between all modules including the CLD that needs a dedicated green wire ground.

Problem 10: Check Clock (IFW) Informational Warning Diagnostics. On a loss of power, the clock does not keep time if there is an extended power loss (greater than 15 seconds).

Corrective Action:

This diagnostic is shown in active diagnostic menu.

Note: If you clear this IFW diagnostic while the machine is running, you will shut down the unit. Wait to clear the diagnostic when the unit is off.

Problem 11: Chiller Loss of Communication with Starter and the IGV calibrates.

Corrective Action:

1 IPC to Starter module disconnected or reversed.

2 Starter module not powered up.

3 Verify that a good ground exists between all modules including the CLD that needs a dedicated green wire ground.

Problem 12: Chiller Loss of Communication with Starter or Circuit Loss of Communication with Chiller Diagnostics

Corrective Action:

1 The 120 VAC side of the 3KVA transformer should be grounded at only one spot and it is in the Starter. Both the 120 VAC and the 24 VAC in the UCP should not be grounded.

2 Verify the IPC wire is shielded twisted pair between the Starter and Chiller modules and its shield is grounded at J1-6.

3 Verify there is a dedicated ground between the remote starter and the chiller.

4 Verify that a good ground exists between all modules including the CLD that needs a dedicated green wire ground.

Problem 13: Clear Language Display won't go into Demo mode.

Corrective Action:

1 You must press Custom report and Compressor report at the same time while the display is showing software part number on power-up. It will not go into Demo mode if there is IPC communication.

Problem 14: Communication diagnostic; None or Degraded Communications.

Corrective Action:

1 Starter module must have the A phase on pin 2 of J2 24 Vac

2 IPC wires must be connected

3 IPC wires must have correct (+ -) polarity on J1.

4 The TCI and CLD modules have LEDs to indicate the sending and receiving of chiller packets. Green (RxA) is receive and should be blinking constantly. Red (TxA) is send and blinks every 1-2 seconds.

Problem 15: Loss of Communication with Starter Diagnostics at Startup with no Inlet Guide Vane action. Mode is "Resetting" and can move through the menus.

Corrective Action:

1 IPC to Starter module disconnected or reversed

2 Starter module not powered up.

3 Verify that a good ground exists between all modules including the CLD that needs a dedicated green wire ground

Problem 16: Loss of Communication or Intermittent Communication between any of the modules. (Chiller, Starter, Tracer, Circuit, Stepper, Options, Purge, etc.)

Corrective Action:

1 Verify the Chiller and CLD versions are compatible with Tracer.

2 Reference Trane *CTV-CSB-90* and *92* for module compatibility numbers.

3 ICS address at CLD should match with Tracer.

4 Are the DIP switches set correctly? They should be all off for COM 3; OFF-ON-OFF for Comm 4.

5 In the Tracer module, verify the IPC LEDs near J1 are blinking. Red LED is transmit and should be blinking constantly showing lots of IPC action (even if not for the TCI). The green LED is for receive and should only be blinking rapidly in a row once every 1-2 seconds which is the IPC cycle time.

6 Verify the COM 3 LEDs near J3 are blinking. Red LED is transmit and should be blinking showing lots of COM 3 action (even if not for the TCI). The green LED is for receive and should only be blinking rapidly in a row once every minute which is the Tracer cycle time.

7 The Starter module or other modules are not grounded well. The IPC needs the modules to be grounded together.

8 Go to service test menu and verify that Chiller thinks a TCI 4 is installed.

9 Look at the voltage of each line with respect to ground. A logic 0 should be .5 V or less; a logic 1 should be 4.5 volts or more.

~ For COM 3 lines less that 1000 Ft., a 300 Ohm terminating resistor put across the two wires is needed. Install the resistor first at the chiller end of the link.

~ Radio frequencies generated from sources like airplanes and radio towers may be inducing noise in the communication lines. Tie matched capacitors of around 200pF at either ends or both ends from each line to ground.

10 De-install TCI option and power up and see it self install within 10 seconds. If not, something is wrong in TCI module.

11 De-install Tracer option and power up and see if it self installs within three minutes. If not, something is wrong with the Tracer side.

12 Tracer option is self-installed. No need to enable it manually. If enabled manually and no Tracer on the communication line, then a Loss of Communication with Tracer will be called. If a Tracer is put on communication line, then communication side diagnostics are called: Loss of Communication with Tracer.

Problem 17: ***No Communication, on a power up, get message "No Communication, Data Not Valid" and no action in the IGV.***

Corrective Action:

1 Chiller module not powered up.

2 IPC to Chiller module not connected.

3 IPC shorted.

4 Disconnect all modules from the IPC to CLD except the Chiller module. If a communication is established, try plugging one of the other modules one at a time. When it then fails, this module is pulling down the line.

- ~ Check the LEDs at the rear of the CLD. The left one is "TEST and should be on if all is normal.
- ~ The second LED from the left is the "+5VDC" and should be on all the time if all is normal.
- ~ The third LED from the left is the transmit and should only blink rapidly every 2 seconds when the CLD talks on the line.
- ~ The fourth LED from the left is the receive and should be blinking rapidly all the time since there is constant bus action.
- ~ Verify that the CLD is grounded to the other modules.
- ~ Module Grounding Problem. On the Starter module DO NOT ground the IPC. IPC is grounded at the Chiller module.

Problem 18: ***No Communication, on a power up, get message "No Communication, Data Not Valid" but the Inlet Guide Vane calibrates.***

Corrective Action:

1 IPC to the Local Clear Language Display reversed.

2 IPC to Local Clear Language Display disconnected.

3 Verify that a good ground exists between all modules including the CLD which needs a dedicated green wire ground.

Problem 19: ***Starter Loss of Communication with Chiller. No other diagnostic.***

Corrective Action:

1 Verify IPC connections are good to Starter module and cable is shielded. Chiller module X-13650450-01 is not compatible with Starter module X-13650453-02 and later.

Problem 20: ***TCI Loss of Communication with Chiller.***

Corrective Action:

1 Need a X-13650460-02 or newer TCI module.

Problem 21: High compressor Discharge temperature
The compressor discharge temperature exceeded 200°F.

Corrective Action:

1 Check unit operating conditions for something that would generate high gas discharge temperatures, such as condenser water flow.

2 Extended operation in hot gas bypass. Set the hot gas bypass timer lower.

Problem 22: ***Cond. Pressure 2-10 VDC output will not work.***

Corrective Action:

1 The Chiller module must be a X-13650450-04 or later. Earlier versions did not support this option.

2 Check wiring between transducer (located near the purge) and the Circuit module J7.

3 Faulty transducer (See ***Transducer Checkout procedure)***.

Problem 23: Condenser Pressure Delta-pressure output does not show up.

Corrective Action:

1 In the service settings menu, enable% condenser.

2 The Circuit module must be X-13650451-10 or greater.

3 The chiller module must be X-13650450-09 or greater.

4 Clear language display must be X-13650448-09 or greater.

Problem 24: Cond. Refrig. Temp. Sensor diagnostic, when the displayed Cond. Refrig. Temp. is reading fine.

Corrective Action:

1 Chiller software found in X-13650450-01 Rev. D or earlier mis-diagnosed Cond. Refrig. Press. Replace with new Chiller module.

Problem 25: Condenser and Evaporator entering and leaving water temps. changing rapidly and reading incorrectly, i.e. -25°F to 900°F.

Corrective Action:

1 Bad Chiller module; it must be replaced.

Problem 26: Condenser Water Flow lost diagnostic. Unit will not restart until manually reset.

Corrective Action:

1 Phase A and B Chiller module software were actually an MMR. Phase C (X-13650450-04) changed to a MAR. Time changed from 3 minutes to 4-1/4 minutes.

Problem 27: Capacity limited by current limit

Corrective Action:

1 Correct overload settings.

2 Check for correct number of turns through the CTs.

3 Starter module ct input bad.

4 Defective CT.

Problem 28: Custom menu - Unwanted items that you did not install and you cannot remove.

Corrective Action:

1 The initial problem was if you had installed an option, put it in the Custom menu, then de-uninstalled it without first removing it from the Custom menu.

Problem corrected on CLD X-13650448-02, Rev. E.

Problem 29: Display is locked up. No communication, Data Not Valid Diagnostic.

Corrective Action:

1 Check the (4) LEDs on the back of the CLD. Left to right.

- ~ #1 is the Test Light and should be on all the time.
- ~ #2 is the 5VDC and should be on all the time.
- ~ #3 is the Transmit and should blink every 2 seconds.
- ~ #4 is the Receive and should blink continuously.

2 There may be a IPC communication problem with one of the boards. Disconnect the IPC from all modules except leave the IPC connected from the CLD to Chiller module. Start connecting the IPC at one at a time until we find which one is the problem.

3 Check the Chiller module 24 VDC, 5 VDC and 24 VAC.

4 Check the CLD (Clear Language Display) grounding. It has to be grounded from the clear language display to the chassis/back panel.

5 Starter module IPC should not be grounded. Ground is on the Chiller module end. A double ground will lock up the display.

Problem 30: Display on the CLD is flashing.

Corrective Action:

1 The +5V LED should also be flashing.

2 Verify the 24 VAC delivered to the CLD is within range of 20-28 VAC. Disconnect the IPC to verify it is not causing this.

Problem 31: External Chilled Water Setpoint Problems.

Corrective Action:

1 Polarity must be (minus) (plus) on J9 4,5 of the Option module.

2 If the 4-20 MA and the 2-10 VDC are out of range, the active chilled water setpoint source reverts back to front panel and does not work. The 4-20 mA and 2-10 VDC corresponds to 0 to 65°F.

3 Setpoints: SW3-1 should be: OFF for 2-10 VDC and ON for 4-20 mA

4 Chilled Water Reset type is Disabled.

5 Chilled Water Setpoint source is External.

6 Setpoint source override is None.

7 External Chilled Water Setpoint is Installed in machine configuration.

8 Clear any active options module diagnostics.

9 Input type must be selected in the field start-up menu.

10 May need to install an isolation device (DC to DC converter),

11 Set to 2-10 VAC and hook an 8-volt battery to the input to verify the module works.

Problem 32: External Current Limit setpoint does not work.

1 Polarity must be (-, +) on the option module J7 11,12.

2 Isolated 2-10 VDC or 4-20 mA analog input is required. The 2-10 VDC and 4-20mA corresponds to 40% to 120% RLA.

3 SW2,1: OFF for 2-10 VDC and ON for 4-20 mA.

4 Current limit setpoint source: set to external.

5 External current limit setpoint: set to installed.

6 Setpoint type: 2-10 VDC or 4-20 mA. Input type must be selected in the field start-up menu.

7 May need to install an isolation device (DC to DC converter),

8 Set to 2-10 VAC and hook an 8-volt battery to the input to verify the module works.

Problem 33: Fault Relay open on an AFD (air cooled adaptive frequency Drive)

Corrective action:

1 In machine configuration, check for correct starter type.

2 Wiring problem on the drive.

3 2U2 logic module problem.

4 Starter module.

Problem: 34 Fault relay open on Solid State Starter (SSS)

Corrective action:

1 Bad SSS fault input on Starter module. Replace Starter module.

2 Wiring problem to Starter module.

3 Program correct starter type in machine configuration.

4 Set the correct HPC setting in machine configuration.

5 Replace the HPC.

6 Replace the Circuit module. Faulty HPC input.

Problem 35: Free cooling (FC) operation problems.

Free cooling can be controlled manually from the front panel or automatically via a on/off binary input (called external free cooling switch) at the Options module.

Corrective action:

1 Free cooling can be entered via an on/off switch manually at the front panel automatically via an on/off switch input called external free cooling switch on the Options module J3 5,6

2 Free cooling cannot be entered if the unit is in the stop mode, it has to be entered from the auto mode. You cannot use the Manual vane control in free cooling.

3 If the chiller is in auto, and not running the UCP2 will start the condenser water pump just as with the powered cooling.

4 Once the condenser water pump is running and confirmed. The FC valve relays #1 & #2 and the FC aux relay are all energized. If the FC valve-closed limit switches do not close within 3 minutes, a MMR diagnostic will be generated.

5 If the chiller is in auto and running powered cooling, the chiller will do a normal friendly shutdown when the FC command is given before going into FC.

6 FC can be terminated from either the front panel, external switch input or Tracer.

7 Enable free cooling in machine configuration menu.

8 Install compatible modules.

9 Connect power and IPC to the options module.

10 Defective Options module.

11 Free cooling actuator.

Problem 36: Evaporator Water Temperatures are reversed (2 pass units only).

Corrective Action:

1 Reverse the sensor leads at the module.

Problem 37: Low Evaporator refrigerant temperature

Corrective action:

1 Defective Stepper module.

2 Missing or incorrect wiring to Stepper module.

3 Defective sensor.

4 Unit charge.

Problem 38: 2F1, 2F2 and 2F3 Fuses blow - On 200-575 volt units when switching the starter disconnect from OPEN to CLOSED.

Corrective Action:

See Trane manual *CVHE-CSB-31*

Problem 39: GPM/Tonnage option problems

Corrective action:

1 Correct Flow Coefficients and Exponents settings.

2 Reference Trane service bulletin *CHVE-CSB-45C*. For upgrade modifications, CLD X-13650782-01 or newer is required to see all new screens. Updated chiller module X-13650450-15 or newer is required.

3 Install GPM/tonnage option in machine configuration.

4 Debris in the strainers.

5 Defective transducer.

6 Defective Chiller module.

7 Automatic calibration performed.

Problem 40: High Vacuum Lockout

Corrective action:

1 Select correct refrigerant type in machine configuration.

2 Check and correct oil sump pressure transducer wiring.

3 Program correct local atmospheric pressure.

4 Replace the oil sump pressure transducer.

5 Replace the Circuit module, bad oil sump pressure input.

6 Replace Circuit module. Software improvement in modules X-13650451-12 and greater.

Problem 41: Hot Gas Bypass (HGBP) Does Not Work.

Corrective Action:

1 Module Compatibility:

- ~ Chiller must be X-13650450-04 or newer
- ~ CLD module must be X-13650448-05 or newer
- ~ Option module is X-13650452-01 or newer.

2 Hot Gas Bypass Option must be installed in the machine configuration. Installing HGBP control sets up the display features associated with HGBP.

3 Hot Gas Valve Control in the service test menu must be in the Auto Mode.

4 Hot Gas Bypass Control enabled in the field startup group. With this enabled, the IGV target% screen comes up along with the HGBP timer. Enable and Maximum HGBP time.

5 IGV target% has a default of 10%. This is a good place to start. The goal is to keep the unit out of surge.

6 The Inlet Guide Vane must be closed or at a minimum to go into Hot Gas. Set the guide vane travel stop in the service settings. ROM default is 0%.

7 The Chilled Water Setpoint minus the actual chilled water temperature must be 0.6°F or greater, i.e., Setpoint of 45°F and leaving temperature of 44°F for more than 20 seconds would show the need for Hot Gas.

8 Verify the Hot Gas Timer is installed and max HGBP time is greater than zero.

9 Verify that the module software numbers are being displayed in the Service Test Menu.

10 Verify that the IPC Communications wire is connected to J1 of all modules and we have good 24 VAC and 5 VDC.

Problem 42: *Ice Making*

UCP2 will accept a contact closure (Options module J3 7,8) input to initiate Ice building. When in ice making the compressor will be fully loaded.

Corrective action:

1 Enable ice making in machine configuration.

2 Binary input required on the Options module J3 7,8. If you enter ice making externally or a remote communicated input (Tracer) to initiate ice building.

3 Operator settings:

- ~ Ice building enable. DO NOT enable this or you will not be able to exit ice building. ROM default is disable. *NOTE: This is typically used by Service to manually enable ice making.*
- ~ Set Front panel ice termination setpoint. ROM default is 27°F
- ~ Set the ice making to normal cooling transition timer. ROM Default is 5 min.

4 Ice building shall be able to be terminated by one of three methods:

- ~ Opening the external ice contacts/remote communicated (Tracer)
- ~ Satisfying an evaporator entering water temperature setpoint
- ~ Surging for 15 minutes.

Problem 43: IGV will not move in the Service Test Manual mode.

Corrective Action:

1 Verify the CLD LED comes on solid. Verify there are no Stepper module diagnostics.

2 Verify we are in a Stop mode, Diagnostic Stop mode, or Run mode. All other modes the Manual Vane Control will not work.

3 Is the IGV travel percentage increasing? If so there is a problem with the motor or Stepper module drive circuit.

4 Are we in a "Stop" mode after being in a Limit mode. The limit bit may be set so do a power down to clear.

5 Will not work in post lube or initialization in preparing to start.

6 On power up, does the Stepper module do a BPI search? If not, the Stepper module could be held up in the Initialize mode internally. On a power up, the Stepper module looks for communication with the Chiller, Starter and Circuit modules. If it doesn't hear from any one of them, it stays in the Initialize mode and will not do BPI or Manual Vane Control. If no BPI, check the IPC wiring. Also, if trying to start the chiller, the mode will stay in initialize.

Problem 44: IPC Buffer Diagnostics

Corrective Action:

1 Clear Language Display is not communicating. Replace the CLD or the Chiller module is not communicating and needs replacing.

Problem 45: KW reads high by a factor of 3, with optional PT installed.

Corrective Action:

1 Software change made 11/93 to CLD. X-13650448-02 Rev. E or later corrects the problem.

Problem 46: Loading Problems

Corrective Action:

1 Unit is in External Stop and when released, requires 3.5 minutes to get the vanes to desired point of operation (typically 50 degrees). This is close to the maximum rate that the compressor can load because the fastest the vanes will move is 1250 steps every 5 seconds.

2 If Soft Load Control is Enabled, the Soft Control parameters can be adjusted to meet the requirements of the system. If the chiller is allowed to ramp up faster than needed it could over shoot the leaving chilled water temperature setpoint and potentially be current limited. If this overshoot is too rapid and causes excessive current draw, the adaptive control will force an unload to approximately 70%. This could cycle several times before stabilizing.

   If Soft Load Control is Disabled or the loading is not from initial startup, The LWT Control Proportional, Integral and Derivative gains can be adjusted to allow system adjustment to properly follow the load. Typical changes should be small. 1-2% proportional gain change or 0.01% integral gain changes. Always adjust proportional gain first. This is the coarse adjustment, while integral is the fine and derivative is the micro adjustment.

3 Item 1 reference the mechanical limitation of the stepper motor while the software limitation is a pulldown rate of 5°F/minute of the leaving water temperature. This maximum cannot be overridden.

Problem 47: Memory Error

Corrective action

1 Replace the Chiller module.

Problem 48: Momentary Power Loss (MPL)

Momentary power losses are temporary interruptions in the power being delivered to the motor. The UCP2 monitors MPL by measuring currents from phase A and C and by monitoring the 24 VAC input power to the Starter module (terminals J2 1,2. Since the UCP2 is looking at actual power flow into the motor, it needs the relationship of voltage and current. MPL is active anytime the compressor is running, but not on startup.

Corrective Action:

1 MPL is active for the Run mode, not in the Start mode.

2 CT wiring on J5 of the Starter module must be wired White-Black per print and Phase A must be on Terminals 1 and 2, Phase B on 3 and 4 and Phase C on 5 and 6. CT polarity must be correct.

3 Wrong CTs installed.

4 Check phasing of the supply voltage. The "A" phase must be delivered to J2-2 of the Starter module. 24 volt AC polarity must be correct.

5 Look at the voltage on J2 for noise. J2 should be a smooth 24 VAC sine wave. If we get electrical noise from things such as inverters or high frequency generators, you will see noise blips off the sine wave.

6 Verify the polarity of the CT circuit is correct. For single CT circuits the White wire must be connected to J5-5 with the dot on the CT facing the line. For dual CTs. The "HI" polarity dot on the line CT must be facing the line, the Brown wire from the X-13650266 transformer primary connected to XI and the White wire from X-13650266 secondary connected to J5-5.

7 Verify that there is voltage delivered to the J6 terminal, if not check the HPC circuit, circuit breaker or Starter Interlock.

8 Check for loose wires.

9 Check the wiring from J8 to 2K1 Coil and Auxiliary.

10 Two wiring errors will allow you to start and go out on Momentary Power Loss when the unit loads up. The CTs and 24 VAC may be wired up improperly. As the loading is changed due to vane movement, then MPL may be called. If the unit starts and runs for a period of time before tripping on MPL (on a regular basis), you probably have one of two issues. Either 2 wiring errors (i.e., polarity on J2 and CT wiring error) or line noise on the incoming J2 24 VAC.

11 Defective HPC (high pressure control).

12 PFCCs installed incorrectly.

13 If the unit trips on Momentary Power Loss, vanes stay where they were and then restart without going through a Vane Closure or BPI search, two modules need to be changed:

- ~ Chiller module needs to be a X-13650450 -04 or newer.
- ~ Stepper module must be X-13650455-04 or newer.

14 Starter module X-13650453-13 and greater have a less sensitive MPL diagnostic trip point.

Problem 49: Motor winding temperatures changing rapidly and randomly.

Corrective Action:

1 Electrical noise problem in the Circuit module. X-13650451-04 Rev. D or later corrects the problem by adding a filtering circuit.

Problem 50: Differential Oil Pressure Calibration Diagnostic following post lube. Secondary problem may be the oil pump will not shut off after post lube.

Corrective Action:

1 Diagnostics are active in all non-running modes and the unit has been off for 5 minutes. The UCP2 calibrates the oil pressure sensors and if an error is found greater than 3 PSID a diagnostic is called out.

- ~ Sensors
- ~ Changing system pressures caused by such things as a pressure or changing water temperatures.

2 If the oil pump is running and will not shut off in post lube, the problem is a wiring error on the Starter module. One or both of the following apply.

- ~ 115 VAC is connected to terminal J6-3 of the Starter module. Check to see if it was connected incorrectly to Terminal J3-1.
- ~ Terminal J8 on the Starter module. J8-1 (Wire #13) goes to the 2K1 Contactor. J8-2 (Wire #15) goes to 2K1 Auxiliary. Check to see if Wire #13 and Wire #15 are reversed.

Problem 51: Differential Oil Pressure

On Circuit module revision X-13650451-13 and newer, has a positive oil pressure trip at 2/3 the setpoint with a default setpoint 12 psig and a minimum of 9 psig setpoint.

Corrective Action:

1 The Circuit module was clearing the 3 minute oil pressure establish timer during a remote RESET. This would result in an Oil Pressure Overdue diagnostic. (Exists for Circuit modules X-13650451-06 and earlier).

2 Faulty oil pump motor.

3 Faulty 1F2 fuse.

4 Faulty Circuit module relay output.

5 Faulty oil pump capacitor.

6 Faulty oil pump sensor and/or wiring.

7 Clogged oil filter.

8 Faulty oil pressure regulator.

9 Differential oil pressure when the unit is off. The unit sees current due to Feedback via the PFCCs or CTs. We get a starter interrupt failure. The UCP2 thinks the motor is running and brings on the oil pump and logs differential oil pressure diagnostics.

Problem 52: Oil temperature High.

Corrective action:

1 Check oil temperature setpoint in service settings.

2 Bad Circuit module heater relay output.

3 Defective oil temperature sensor.

4 Compressor bearings.

5 Oil cooler.

Problem 53: Oil temperature Low (Startup)

Corrective Action:

1 Defective Circuit module relay output.

2 Oil temperature sensor.

3 Replace oil heater.

4 Raise the oil temperature setpoint.

5 Excessive refrigerant in the oil. Check the oil eductor valve. It should be 2 turns open.

Problem 54: Low Oil Temperature (Running)

Corrective Action:

1 The refrigerant pump shaft seal is leaking. Remove the refrigerant pump volute and impeller. Check and replace the shaft seal.

2 The oil tank is being flooded with excessive refrigerant. Check the oil eductor valve (evaporator to oil tank line) at the evaporator. Close it and open 2 turns. If the chiller is exposed to outside ambient/cold temperatures, it may be overcooling the oil/tank, in which case the tank needs insulating.

3 The oil tank heater is off when the unit is running (*Trane Service Alert 206*). A UCP2 software change was made 6/98 so that the chiller is allowed to operate at a condition of saturated evaporator temperature plus 30°F. Take this into consideration when diagnosing this problem. Look at the saturated evaporator temperature to see where your are in operation.

Problem 55: Enhanced oil temperature function not working.

Correction Action:

1 Enable enhanced oil temperature in the service setting menu (the default is enabled.) If enhanced oil temperature is disabled, you will get two additional screens to set oil temperature setpoint and low oil temperature setpoint.

2 Chiller module X-13650450-12 or greater is required.

3 Circuit module X-13650451-13 or greater is required.

4 CLD X-13650448-11 or greater is required.

Problem 56: Oil Pump Discharge Pressure Sensor Diagnostic and Oil Pressure Calibration.

Corrective Action.

Chiller is in a high vacuum where one or both of the transducers reads -14.9 psig.

This is out of range and thus a sensor diagnostic is being called. The diagnostic may be cleared once the chiller is charged.

Problem 57: Over/Under Voltage Diagnostic on Startup.

Overvoltage is a + 10% must hold and +15% must trip. Undervoltage is a must hold –10% and must trip –15%.

Corrective Action:

1 Check main power supply and wiring.

2 You may get the diagnostic with the following Setup Sequence.

- ~ Unit Line Voltage enabled in Machine Configuration.
- ~ Under/Over Voltage is enabled in Field Startup.
- ~ If you then disable Unit Line Voltage, the Under/Over Voltage screen disappears but is still active. You have to then re-enable Unit Line Voltage in Machine Configuration and disable Over/Under Voltage.

3 Over/Under Voltage is used only with PTs installed. If you enable the option with "No" PTs installed you will get the diagnostics.

4 When the Line Voltage Sensing Option is not installed, the Unit Line Voltage menu item is not displayed nor is the Under/Over Voltage option installed.

Problem 58: Phase Loss

There are 2 variations of this diagnostic:

Less than 10% current was sensed on one or more of the current Transformer inputs. Time to trip is 1 second minimum, 3 seconds maximum. This is a MMR diagnostic.

A second and less common method of receiving phase loss diagnostic is via the phase reversal protection circuit of the Starter module. Phase rotation protection is enabled and either the Phase A current signal or the Phase C current is less than 5% of the CT rating, then phase loss will be called out. Time to trip is 0.7 seconds for CTV during start.

Corrective Action:

1 CT hooked incorrectly relative to incoming power.

2 Defective Primary CT (See ***CT Checkout Procedure***).

3 120 VAC missing from the Stop Relay circuit on J6 of Starter module.

4 Defective High Pressure switch. Wire may be off.

5 Problem in the Start Relay circuit on J8 of Starter module. Check all connections and circuit.

6 Verify currents are over 10% RLA.

7 Check the current overload settings.

8 Defective Starter module.

9 Turns through the CTs may be incorrect.

Table 1
CT's for more than 600V or more than 936A systems:

Motor RLA	CT Part Number	CT Terminal Connections	Number of primary turns
8.0-11.9	X-13580272-01		3
12.0-17.9	X-13580272-01		2
18.0-23.9	X-13580272-02		2
24.0-35.9	X-13580272-01		1
36.0-47.9	X-13580272-02		1
48.0-72.0	X-13580272-01		1
24-36 A	X-13580048-01	X1 to X2	3
28-43 A	X-13580048-01	X1 to X3	3
36-54 A	X-13580048-01	X1 to X2	2
43-64 A	X-13580048-01	X1 to X3	2
48-72 A	X-13580048-01	X1 to X4	2
60-90 A	X-13580048-02	X1 to X2	2
72-108 A	X-13580048-01	X1 to X2	1
86-129 A	X-13580048-01	X1 to X3	1
96-144 A	X-13580048-01	X1 to X4	1
120-180 A	X-13580048-02	X1 to X2	1
144-216 A	X-13580048-02	X1 to X3	1
168-252 A	X-13580048-02	X1 to X4	1
192-288 A	X-13580048-03	X1 to X2	1
240-360 A	X-13580048-03	X1 to X3	1
288-432 A	X-13580048-03	X1 to X4	1
336-504 A	X-13580048-04	X1 to X2	1
384-576 A	X-13580048-04	X1 to X3	1
480-720 A	X-13580048-04	X1 to X4	1
480-720 A	X-13580047-02	X1 to X2	1
576-864 A	X-13580048-05	X1 to X2	1
576-864 A	X-13580047-02	X1 to X3	1
720-1080 A	X-13580048-05	X1 to X3	1
720-1080 A	X-13580047-02	X1 to X4	1
864-1296 A	X-13580047-01	X1 to X2	1
1008-1512 A	X-13580047-01	X1 to X3	1
1200-1800 A	X-13580047-01	X1 to X4	1

10 Defective SCR in a solid state starter.

11 Clean or replace contactor contacts

12 Check the Starter Wiring diagram for other components i.e., power monitoring devices that may be causing phase loss.

13 The Starter contactors may be too slow to respond to the Start signal. Disabling the phase rotation will give us more time by taking out the 0.7 highly aggressive circuit but keeping in the primary phase protection. For Starter software X-13650453-04 Rev. K, the time for detection of the highly aggressive circuit changed from 0.3 to 0.7 seconds.

Problem 59: Severe Phase Unbalance

Three currents supplied to the Starter module are monitored for unequal Amp draw. An imbalance in the motor amp draw can cause the motor windings to heat up. This protection can not be disabled or removed. The Starter module phase unbalance protection was made less aggressive in starter module X-13650453-09 or later, when the current unbalance trip point was increased from 25% to 30%.

Corrective Action:

1 Check for defective or incorrect CTs.

2 Replace Starter module with improved software with X-13650453-08.

3 Replace Starter module, for possible bad CT input.

4 Local power company problem.

Problem 60: Phase Reversal

Corrective Action:

Phase Rotation Protection is based on clockwise ABC Phasing. UCP2 picks up current phasing through the Starter module Terminal J5. Four possible causes are:

1 Phases actually reversed

2 Noise on the Link which may inject an illegal state

3 Bad contactor or all the lighting on (1) circuit/phase or (2) of the CT wires reversed on J5.

4 Two of the CT wires reversed on J5.

Problem 61: Printer will not work.

Corrective Action:

1 Verify printer is compatible with a serial 9 pin RS232.

2 Verify printer setup in the CLD is correct. Machine Configuration Menu: Printer Option is Installed. Service Settings Menu: Set Baud Rate, Parity, Data Bits, Stop Bits, Handshaking. For Handshaking: XON/XOFF is recommended.

3 Verify the printer settings match the CLD setup. Baud Rate, Parity, Data Bits, Stop Bits, and Handshaking must be the same as in the CLD.

4 Verify the printer interface is working properly.

- ~ Verify there is IP communication
  - ~ RxA (Green LED near J1) is IPC receive and should be blinking
  - ~ TxA (Red LED near J1) is IPC transmit and should not be blinking

- ~ Diagnostic LED (Red) is OFF
- ~ Check DIP switches, they should be OFF-OFF-ON
- ~ RxB (Green LED near J3) is printer receive and should be OFF
- ~ TxB (Red LED near J3) is printer transmit and blinks only when printing

5 Check the printer cable. Usually a 9-25 pin cable with RX (receive) to Rx, and Tx (transmit) to Tx connections.

6 Try to print manually (in Operator Settings menu).

Problem 62: Purge Compressor will not run in the manual "ON" mode.

Corrective Action:

1 In the Operator Setting menu, select "ON" for Purge Operating Mode. Note that "ON" means that the purge compressor and condenser fan will run. The pumpout motor will run only when the Purge Suction temperature gets below 18°F and turns off when the temperature gets above 22°F.

2 If you get "Purge Pumpout Rate Exceeded" message then go to the Service Settings menu, go to Field Startup Group and set "Purge Service Excessive Pumpout Outride Timer" to the amount of time you would like the pump-out motor to run without it incrementing the pumpout rate. The maximum allowed time is 72 hours. When this time is reached, you will get the "Max Pumpout Rate Exceeded" message.

3 Clear all purge diagnostics.

Problem 63: Sensor errors

You may get sensor errors such as: evaporator water temperature, condenser water temperature, outdoor air temperature, condenser or evaporator refrigerant temperature sensor.,motor temperature, discharge temperature, oil temperature or purge suction temperature.

Corrective Action:

1 Check sensor installation.

2 Replace sensor.

3 Check all sensor wiring and connections. Depending on the sensor and which module it connects to, you may have a bad module such as the Chiller, Stepper Circuit Or Purge.

Problem 64: Transition resistors stay in too long.

Corrective Action:

1 If the J8 terminal on the Starter module is loose, the control does not latch in and extends the timing keeping the resistors in longer. Reference *Trane Service Bulletin CVHE-CSB-35.*

Problem 65: Setpoints are not being stored, service tests will not work and we are calling many diagnostics on the CLD.

Corrective Action:

1 IPC to Starter module disconnected or reversed.

2 Starter module not powered up.

3 One wire of the IPC is not connected.

Problem 66: Starter Contactor Interrupt Failure Diagnostic when powering up the UCP.

Corrective Action:

1 Starter module is sensing motor current greater than 10% RLA when motor should be OFF on a power up or in OFF state.

2 Starter module is sensing motor current greater than 10% RLA .68 Sec. after initiating a shutdown.

3 Look at phase currents as read in the Compressor Report.

4 If power factor correction capacitors (PFCCs) are used, these capacitors should be placed on the motor side of the 2K1 and 2K2 contactors so as to be disconnected from the line when the motor is off.

5 Replace the Starter module. Could be a software problem or bad module.

6 Contactor or contactor wiring problem.

Problem 67: Starter Dry Run Test Diagnostic upon entering a Starter Dry Run Test.

Corrective Action:

The Starter module is sensing either the presence of line voltage from the PTs or line current from the CTs.

Problem 68: Starter Dry Run will not work.

Corrective Action:

1 If the PTs are installed, they sense voltage and prevent dry run.

2 A major diagnostic is present.

3 Unit is not in Stop mode.

4 Starter senses the presence of currents.

5 There is a MMR diagnostic present.

Problem 69: Starter Fault type 1, 2 or 3

Corrective Action:

1 Program the correct starter type in the machine configuration menu.

2 Repair or replace contactors.

3 Replace Starter module. Possible faulty relay output.

4 Starter panel wiring.

5 Check CT connections to the Starter module.

Problem 70: Stepper motor is humming.

Corrective Action:

While in the hold mode, the stepper motor is driven with 1.0 amps. This is the case even if the actuator is fully closed. The humming is normal.

Problem 71: Extended surge

Corrective action:

1 Unit operation conditions resulting in surge, such as: high head, air in the unit, condenser tube fouling, low water flow, low charge and condenser water temperature vs. design. Unit operation conditions is the most likely cause.

2 Replace Starter module. Faulty CT input.

3 Stepper motor and/or linkage.

4 Replace options module. Bad head relief request relay.

5 Guide vane linkage.

6 Replace Starter module with more sensitive one (X-13650453-17 or greater).

Problem 72: Pressure Transducer shift in calibration. Diagnostics will be sensor calibration related such as sensor failure or oil pressure sensor calibration.

Corrective Action:

1 Wired incorrectly. Check diagram.

2 Corrosion on transducer contacts.

3 Bad transducer.

4 Disregard diagnostics when the unit is a deep vacuum prior to charging.

Problem 73: Rapid Time of Day Scrolling or Date jumps back one day.

Corrective Action:

1 Problem one is rapid time of day and year scrolling. The problem is in the CLD software when we reach December 29, 30 and 31. Fix: Replace the CLD (Local Clear Language Display) with a X-13650448-03 or newer. To stop the scrolling, press Enter to get a valid date and set before or after Dec. 29/30.

2 Problem two is when the date jumps back one day. The date of January 4,1995 is set and it jumps back to January 3, 1995. This is because 1996 is a leap year and the problem only exists on the year prior to leap year. Replace the CLD with a X-13650448-03 or newer.

Problem 74: Unit did not Transition diagnostics.

Corrective Action:

1 Do a Starter Dry Run Test.

2 Check for 24 VAC input to all modules.

3 Check for 24 VDC and 5VDC on the Starter module.

4 Check all wiring and connections.

5 Check for 120 VAC on the Starter module J4-1 and 2. J4 is an OPTO input circuit that recognizes transition complete. If there is no signal on J4, the unit will not transition.

6 Replace bad Starter module.

Problem 75: Tracer Diagnostics e.g.,Tracer loss of comm with options, starter, etc. as well as other Tracer related diagnostics.

1 Check the IPC wiring connections on the related module with diagnostics.

2 Check tracer to UCP wiring/connections.

3 Make sure the Tracer module is installed, wired correctly and powered up.

4 Set the chillers ICS to match Tracer. Check the Tracer dip switch settings: Tracer Comm 3 should be: "OFF OFF OFF" and Tracer Comm 4 should be: "OFF ON OFF"

Problem 76: Unit Tons Read-out on CLD does not work.

Corrective Action:

1 On the original design up to mid-1998 (with the reversing solenoid valve and plastic piping):

- ~ Verify that the condenser solenoid is connected to the condenser.
- ~ Verify that the entering port of the solenoid goes to the entering water line.
- ~ Verify that the leaving port of the solenoid goes to the leaving water line.
- ~ With the solenoid de-energized, the entering water line is monitored.
- ~ Verify that the Evaporator Solenoid is connected to the evaporator.

2 With the new electronic version mid-1998 on (does not have the reversing valve or plastic piping): reference *Trane Service Bulletin CVHE-CSB-45B.*

- ~ Check for fault transducer.
- ~ Check y-strainer.
- ~ Check wiring.
- ~ Check coefficients in the service settings menu.
- ~ For an open system, follow special procedures in *Trane CVHE-CSB-45B*

Problem 77: Unknown diagnostics 1217 informational warning.

Corrective action:

1 You have a newer Chiller and Starter module and an OLD clear language display (CLD). Install a new CLD to read the diagnostics.

CVHE/F/G Trim Balance Procedure

This procedure outlines the modifications necessary to the Starter module to allow operation of the motor in the Wye configuration during test runs.

1 Unplug the connector from J10 to prevent the run contactor from coming in.

2 Unplug J14 to prevent transition from occurring.

3 Install a jumper on J12 between terminals 1 & 3 to maintain the shorting contactor closed.

4 Install a jumper through an on/off switch across J6 1,3 to start and stop the motor.

Run Procedure:

1 Lockout power to the chiller to prevent startup, until ready.

2 When ready for the run test, energize power to the chiller. The shorting contactor should close. The motor will be controlled by the Auto push-button on the UCP2 Clear Language Display. Stop will be controlled by the switch on J6.

3 Program the inlet guide vanes to zero target.

4 With the chiller in the "panic stop" mode, press Auto.

Start sequence:

1 Go to the service test menu and put the oil pump to the ON position. This will assure lubrication while the stop signal is bypassed via the J6 Switch.

2 Normal start.

3 During acceleration, close the switch across J6.

Stop/Reset sequence

1 Open the switch across J6.

2 Allow the chiller to coast down.

3 Lockout the chiller.

4 Restore the oil pump to Auto.

Sensor And Transducer Operating Ranges

Temperature range on sensors: 140°F to 212°F ± 2.5°F

Transducer range: 0 to 35 psig.

Temporary Forced Unload Setup

The following will work if you have the need to temporarily unload the unit for a specific requirement.

1 Set the front panel current limit setpoint at your requirements, (say 40%)

2 Set the current limit setpoint source to external source.

3 Provide a 10 VDC or 20 mA input signal to J7 11,12.

4 Provide a binary switch to enable/disable the input to J7.

5 With the binary switch closed the unit will operate with a 100% current limit.

6 With the binary switch open the unit will operate with a 40% current limit.

Communications Test

A communications test is included in the CLD to check the Chiller-to-CLD communications.

To access the communications test:

1 Press the 'Service Test' key.

2 For the password, press 'Next' and '+' keys at the same time.

This screen can be used as a debugging tool when CLD-Chiller IP communications are suspect. The first line on the screen indicates which Chiller packets the CLD is checking. The second line on the screen indicates how many times in a 15 second interval the particular packet was received by the CLD. If a packet is received more than 9 times in the interval, a '+' is displayed. The counters are reset to 0 every 15 seconds. Hitting any key while on this screen will cause an exit.

Packet #:	2 3 4 5 6 7 8 9 10 11 12 14 15
Received:	x x x x x x x x x x x x x x x

Troubleshooting IPC Communication Diagnostics

1 Check the IPC connections to all modules. Make sure the twisted pair wires that plug into each modules' J1 connector are making good contact with the wire. Be sure each connector is not clamping down on the wire insulation.

2 Verify that the polarity of the IPC link is correct. The twisted pair IPC link is two color twisted pair wire. Be sure the same color wire is on top for each twisted pair connection.

3 Using a voltmeter set to AC volts, measure the voltage at the J2 connector on each module. It should read between 20 and 28 VAC. Also check the green connector to make sure it is securely plugged into the module. Inspect each screw terminal to be sure they are not clamping down on the wire insulation.

4 Most of the UCP2 modules have 24 VDC and 5 VDC test points on the board. They are clearly labeled and accessible without removing the sheet metal covers. For the Starter and I/O modules, the test points are located in the upper left hand corner of the module. For the other modules, they are located on the upper right hand corner of the module.

Using a voltmeter set to DC volts, measure the 5 volt test point. It should be between 4.75 VDC and 5.25 VDC. Measure the 24 volt test point. It should be between 23 VDC and 25 VDC. **Note: The I/O module's 24 VDC test point will read 0 VDC.** If any of the voltage measurements are not within the acceptable range, replace the module.

5 Verify that a good ground exists between all modules. The CLD requires a dedicated green wire ground. Verify this is in place, and has a good connection. Paint may need to be scraped away to insure a good connection.

6 **For remote starters only:** It is very important that a good ground exists between the starter panel and the chiller control panel. Use a continuity checker to verify a good ground exists between the two panels. If there is not a good ground, run a dedicated ground wire between the starter panel and the control panel.

For a "No Communication, Data Not Valid" message on the Clear Language Display:

1 Perform the above checkout procedure.

2 If the message still did not go away, unplug all of the IPC connections from the Chiller module except for the IPC link that goes to the Clear Language Display.

3 Establish communication with only the Chiller module and then plug the other IPC connections back onto the Chiller module one at a time. If the "No Communication, Data Not Valid" message suddenly reappears when you plug one of the connections back in, you have identified the IPC link that is causing the fault. Carefully check that link for a lead to lead short or a short to ground.

For a "Loss of comm with Stepper" diagnostic:

1 Make sure the wiring to the stepper motor is correct. If the wiring is not correct it will destroy the power supply on the module, and a loss of comm with Stepper will result.

The Correct stepper wiring follows:

Table 2
Stepper Motor Connections

J6 or J8 Connector Pin# on Stepper Module	Motor Winding Output Signal Name	RTH 34X1BEHH Motor Terminal Connection	CTV, ABS M091-FD8109 Motor Terminal Connection
4	1+	1	3
3	2+	3	5
2	1-	2	1
1	2-	4	4

Heat Sink Temperature

This temperature is monitored on the Cutler-Hammer Solid State Starters Only. The Starter module monitors the Solid State Starters Heat Sink Temperature, displays it in the compressor report on the Clear Language Display, and provides a Heat Sink Temperature Start Inhibit mode. The Start Inhibit Temperature is ROM based (Not adjustable at the Human Interface) by Solid State Starter, and Chiller size.

Chiller Nameplate RLA	SSS Heat Sink High Temp. Start Inhibit
0-200 Amps	67°C (152.6°F)
201-360 Amps	77°C (170.6°F)
361-560 Amps	77°C (170.6°F)
561-700+ Amps	78°C (172.4°F)

On a call for cooling if the heat sink temperature is above the value shown in the table above the unit shall enter the Heat Sink Temperature Start Inhibit mode until either the heat sink temperature drops 1.8°F (1°C) below the Start Inhibit Temperature, at which time the unit will complete the pre-start procedures and start, or there is no longer a call for cooling.

The heat sink temperature sensor connects to Starter module terminals J7-1 and J7-2.

Module Compatibility

UCP2 Module Compatibility

1 Chiller modules X-13650450-02 or greater when installed in a system with a CLD of X-13650448-01 will call out a diagnostic of (Unknown Diagnostic 905). The machine requires a CLD of X-136504489-02 or greater.

2 Starter module X-13650453-02 and greater requires Chiller Packet 20.

3 Chiller module X-13650450-01 does not support Packet 20. You need a Chiller module of X-13650450-02 or greater along with the Starter module X-13650453-02 through 6 or you will get a diagnostic of starter loss of communication with chiller. Beginning with Starter module X-13650453-07, the Starter module no longer expects to receive Chiller Packet 20.

   Chiller module X-13650450-03 and earlier do not have the bit that the Stepper module looks for to determine if it should do an inlet vane motor BPI search on startup. These modules will do a BPI search on each startup.

4 TCI COM3 module X-13650460-01, the TCI packet time to receive the information from Tracer is 15 seconds. The information is sent out every 10 seconds and you may get repeat (IFW) informational warning diagnostics filling up the diagnostic logs. TCI COM3 module X-13650460-02 or greater is required.

5 To read evaporator approach temperature, you need a CLD of X-13650448-04 and later along with a Chiller module of X-13650450-04 and later.

6 See *Trane service bulletins CVHE-SB-90 and 91* for additional module compatibility information.

Description of UCP2 Options

1. Tracer Communications Interface Module (Com 3 Module)

This option must be ordered if the chiller is to communicate over a serial communication link to a TRACER 100.

2. Tracer Communications Interface Module (Com 4 Module)

This option must be ordered if the chiller is to communicate over a serial communication link to a Tracer Summit.

3. Remote Clear Language Display Module

Enables the UCP2 to communicate serially with the remote CLD.

The remote CLD panel (COPT:RCPL) communicates serially with 1-4 UCP2-equipped chillers that have the optional remote CLD. The local CLD Stop command function has precedence over the remote function. The Custom Report and display language at the local CLD and remote CLD are independent.

4. Options Module

The Options module is required to implement any/all of the following control options. Some require additional sensor/transducers.

(a)Chilled water setpoint by external/remote source. Allows a remote source to set the chilled water setpoint via 4-20 mA or 2-10 VDC signal. The range is 0°F to 65°F.

(b)Current limit setpoint by external source. Allows a remote source to set the current limit setpoint via a 4-20 mA or 2-10 VDC SIGNAL. Range is 40% to 120%.

(c)Compressor percent (%) RLA output Allows a remote system to receive a 2-10 VDC signal proportional to the chillers % RLA. Range is 0% TO 120%.

(d)Head relief request output. Allows a remote system to receive a binary signal for use with compressor surge protection and condenser limit by requesting lower entering cond. water temp. This option requires an additional transducer on the condenser.

(e)Maximum capacity output. Allows a remote system to receive a binary signal indicating the chiller is at maximum capacity.

(f) Heat recovery/auxiliary condenser entering and leaving water temperatures. This option includes the Options module. Allows UCP2 to monitor the entering and leaving heat recovery or auxiliary cond. water temps which are displayed at the local CLD.

(g)Free cooling machine mode enable/disable and valve control. Allows a remote source to re-enable/disable the chillers free cooling.

5. Printer Interface Module

This option must be ordered if the UCP2 is to have a direct connect serial printer. The printer and cable must be ordered separately. This option includes ASHRAE Guideline 3 Report.

6. Chilled Water Reset Outdoor Air Temperatures

Provides for outdoor air temperature reset of the UCP2 front panel chilled water setpoint. Includes display of outdoor air temperature.

7. Water Pressure Sensors For Evap And Cond System Pressure Less Than 150 Psig.

Includes sensing of the entering and leaving water pressures of the evaporator and condenser, factory-mounted in the water boxes. The Options module is not required. The following data will be shown:

- ~ Entering/leaving evaporator & condenser water pressure (psig)
- ~ Evaporator and condenser differential water pressure (psid)
- ~ Evaporator/condenser GPM
- ~ Evaporator tons (Approximate)

Water Pressure Sensors For Evap And Cond System Greater Than 150 Psig includes sensing of the differential evaporator and condenser water pressures. The Options module is included and required. The following data will be shown:

- ~ Evaporator and condenser differential water pressure (PSID)
- ~ Evaporator/condenser GPM
- ~ Evaporator tons (Approximate)

8. Bearing Oil Temperature Sensors

Includes factory installed sensors and safety cutouts (On high temp) to monitor the leaving bearing oil temperature: Sensor (#1) monitors the journal bearing temperature and Sensor (#2) monitors the Thrust bearing temperature.

9. Phase Voltage Sensors

Includes factory installed potential transformers in the starter for monitoring/displaying phase voltage and this provides over/under voltage protection. The following is displayed: Compressor phase voltage, Kilowatts, Power Factor.

10. Enhanced Condenser Limit

Includes factory installed cond pressure tranducer, piping and wiring.

Provides enhanced high pressure cut-out over cond limit which is standard.

The head relief request relay will energize when cond. limit is approached. The Options module is included.

11. Discharge Temp Sensor

Includes a factory installed sensor and safety cutout on high compressor discharge temp. Allows the UCP2 to monitor compressor discharge temperature. When the chiller is selected with hot gas bypass this sensor is included.

12. Starter By Others

When the starter is being furnished by others, Trane furnishes the Starter module in the UCP2, and other wiring/components as needed. The starter must be built per Trane starter specifications.

UCP2 Modules

Chiller Module

1U1 is the "Master module," collecting data, status conditions, diagnostic information, etc. from modules (over the IPC link) from sensors and remote contacts and, in turn, communicating commands to other modules.

1U1 performs leaving water temperature and limits control algorithms, trading off chiller capacity against various "limits" that the chiller may be working against. 1U1 checks for valid setpoints and identifies unit type for other modules.

Low Voltage (<30VAC) Inputs:

24 VAC, IPC Links to Internal, to Purge and to Starter modules; Evap. EWT and LWT; Cond. EWT and LWT; External Auto Stop; Emergency Stop; Ambient Air CWR; Heat Pump Control; Evap. Water Delta P; Cond. Water Delta P

High Voltage (>30VAC) Outputs:

Evap. Water Pressure Solenoid; Cond. Water Pressure Solenoid; Evap. Water Pump Relay; Cond. Water Pump Relay; Compressor Run Relay; MMR Alarm Relay; MAR Alarm Relay; Limit Warning Relay

Figure 2
Chiller Module

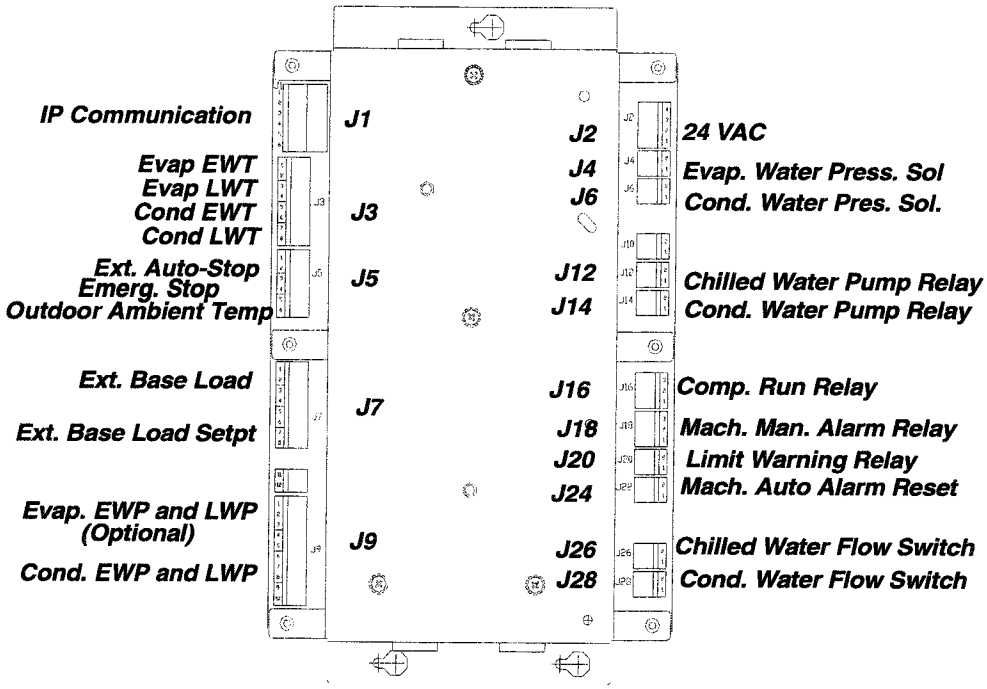

Circuit Module

1U2 assigned functions associated with compressor motor, lubrication system and refrigerant monitoring.

Low Voltage (<30VAC) Inputs:

24 VAC, IPC link

Compressor motor winding temp. sensors 1, 2, 3

Oil tank temperature

Refrigerant monitor equipment room ppm level

Condenser refrigerant pressure

Oil sump pressure

Oil discharge pump pressure

High Voltage, High Amperage (120 VAC) Inputs:

High Condenser Pressure

High Voltage, High Amperage (120 VAC) Outputs:

Vent line solenoid valve; oil tank heater; oil pump motor

Figure 3
Circuit Module

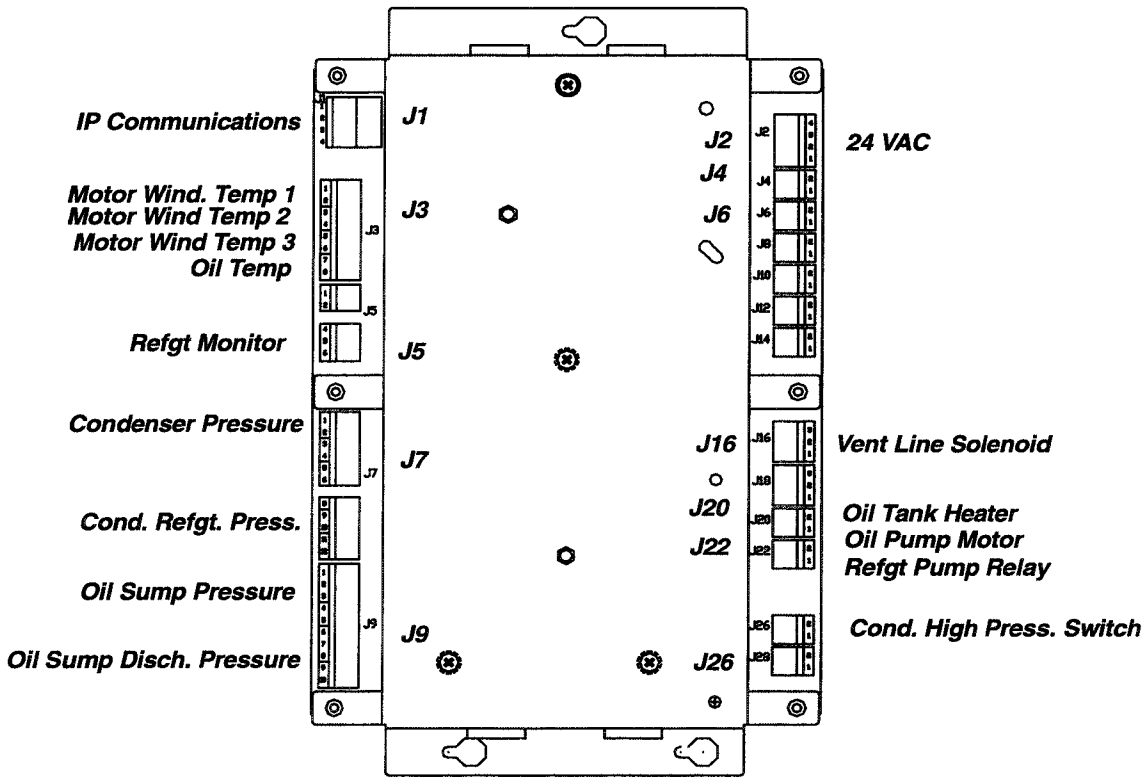

Input/Output Module

Provided only when chiller is equipped with Hot Gas Bypass (HGBP) option.

The I/O module (1U10) operates the Hot Gas Bypass valve on CVHE and CVHF units in response to signals from stepper module 1U3.

The module also receives input on HGBP valve position from the HGBP valve end switch.

Low Voltage (<30VAC) Inputs:

115 V HGBP valve drive signal

High Voltage (>30VAC) Inputs

10 V HGPB valve proof-of-closure signal from valve end switch

High Voltage (>30VAC) Outputs:

HGBP Open Triac

HGBP Close Triac

Figure 4
Input/Output Module

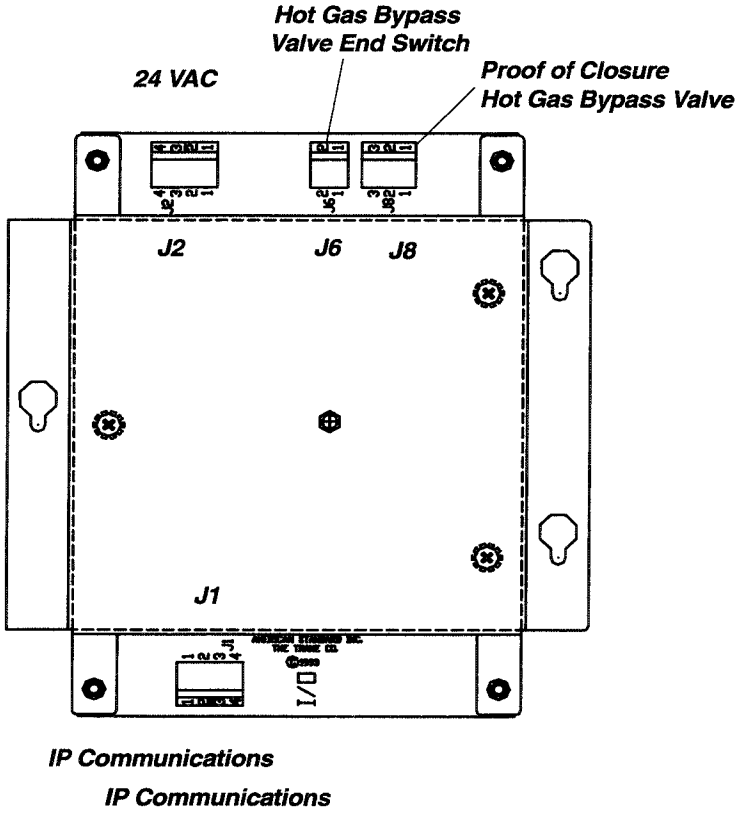

Options Module

As its name indicates, 1U5 provides the control or interface requirements for many of the options available with the UCP2.

Low Voltage (<30VAC) Outputs:

Heat Recovery Actuator

% RLA Compressor

High Voltage (>3OVAC) Outputs:

Ice-Making Relay; Head Relief Request Relay; Max. Capacity Relay

Free Cooling Actuator Relay 1 (Liquid Line Valve)

Free Cooling Auxiliary Relay

Free Cooling Actuator Relay 2 (Gas Line Valve)

Figure 5
Options Module

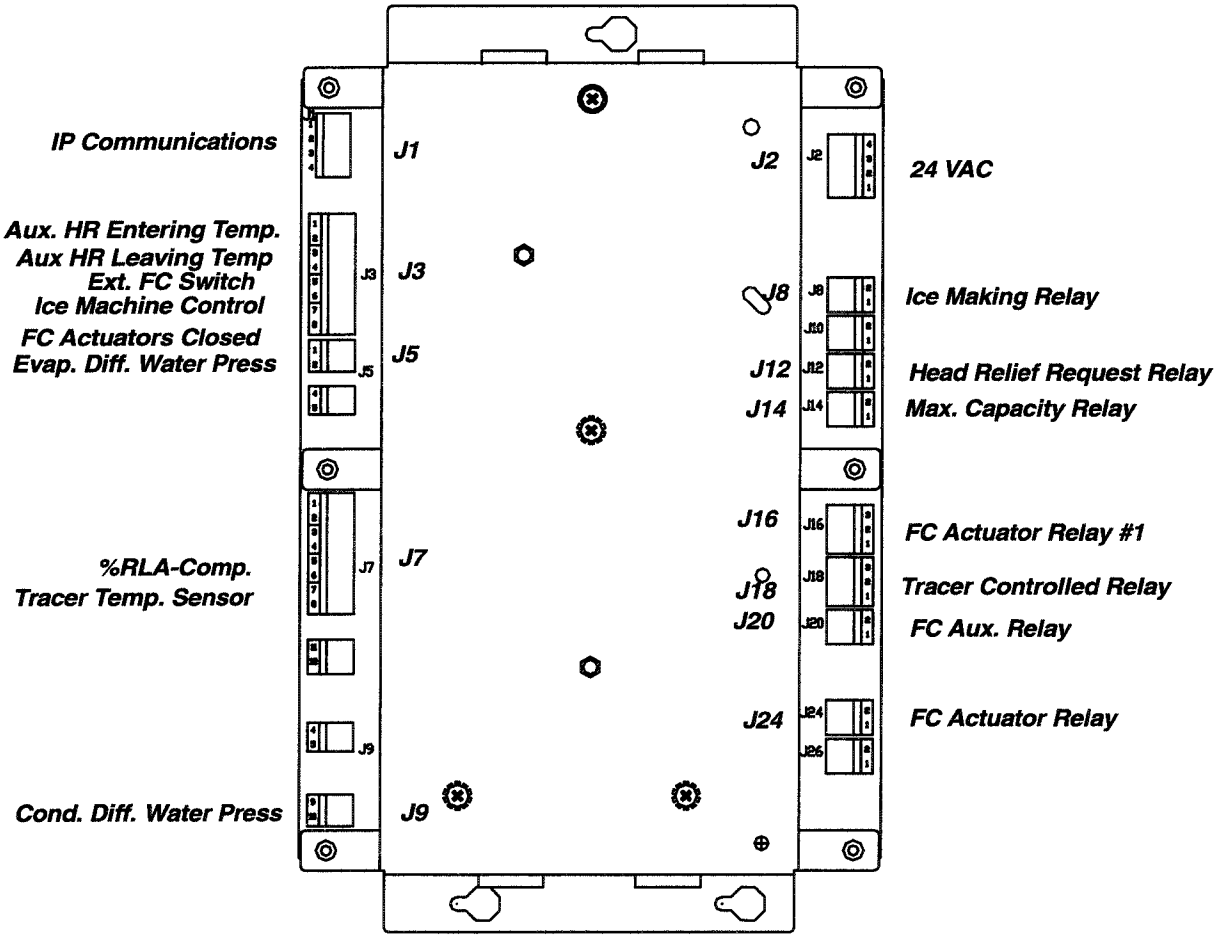

Purge Module

The purge module (3U1) is provided with the Trane Purifier Purge on CVHE and CVHF chillers. It is located in the purge control panel at the purge. It provides all inputs and outputs for the UCP2 to control purge operation.

Low Voltage (<30VAC) Inputs:

- 24 VAC; PC link to Chiller module
- Purge refrigeration compressor suction temperature
- Purge tank liquid level sensor
- Service pumpout switch

High Voltage (>30VAC) Outputs:

- Exhaust valve solenoid; tank valve solenoid
- Purge refrigerant compressor purge pumpout compressor
- Purge pumpout running (Tracer); purge alarm

Figure 6
Purge Module

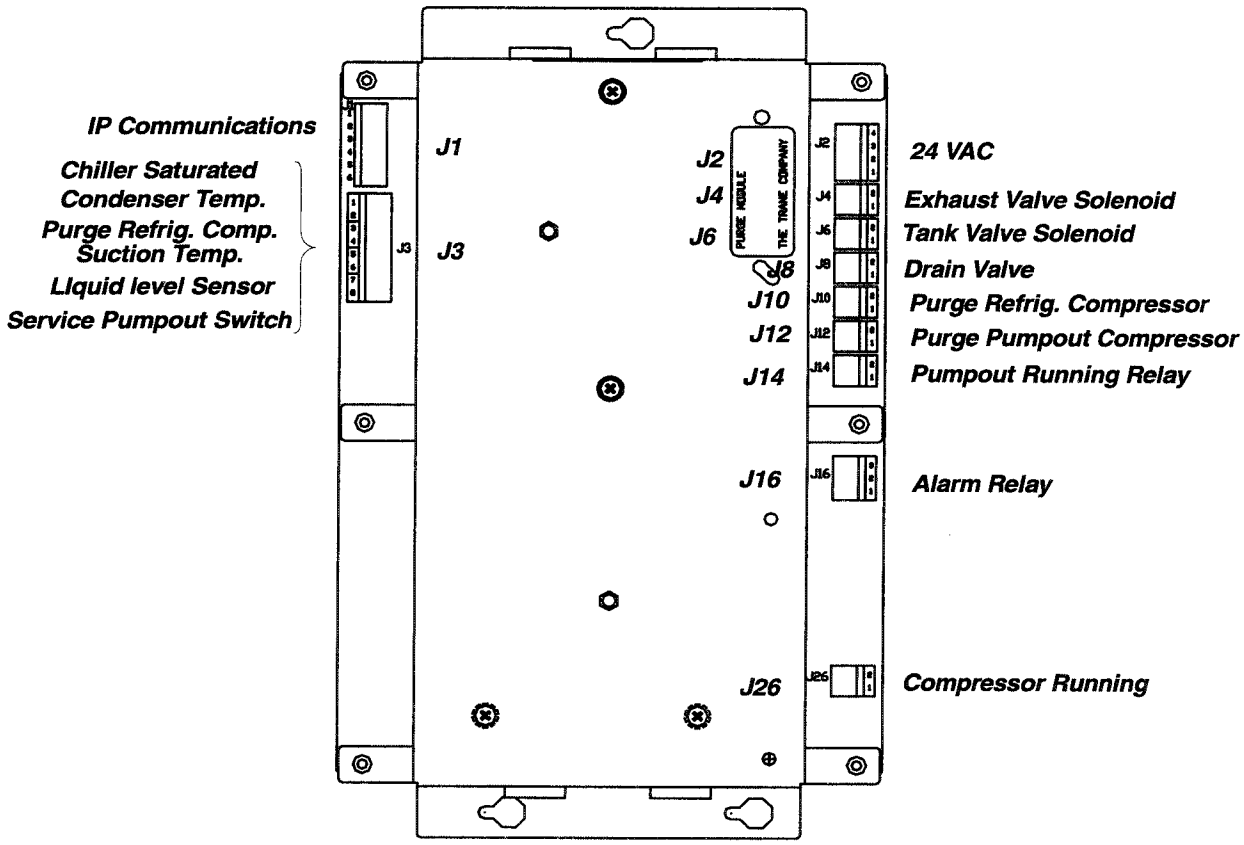

Starter Module Values

The starter module (2U1) is present in all Trane-provided starter panels, whether unit-mounted or remote. For CTVs, if no Trane starter is provided and the customer is providing the starter, 2U1 is mounted in an extension of the unit control panel. It is still designated as 2U1.

2U1 controls the starter when starting, running and stopping compressor motor and provides an interface to all types of starters and AFDs (adjustable frequency drives).

2U1 provides compressor motor protection for running overload, phase reversal, phase loss, phase unbalance and momentary power loss.

Low Voltage (<30VAC) Inputs:

24 VAC; IPC link to chiller module; phase voltages (optional); phase currents; solid-state heat sink temperature (optional); starter driver fault.

Low Voltage (<30VAC) Outputs:

Speed signal output (0-10 VDC - optional)

High Voltage (>30VAC) Inputs:

Transition complete CTV only)

High Voltage (>30VAC) Outputs:

Stop relay; starter relay; run relay; shorting relay; transition relay, shunt trip relay.

Figure 7
Starter Module (Wye-Delta)

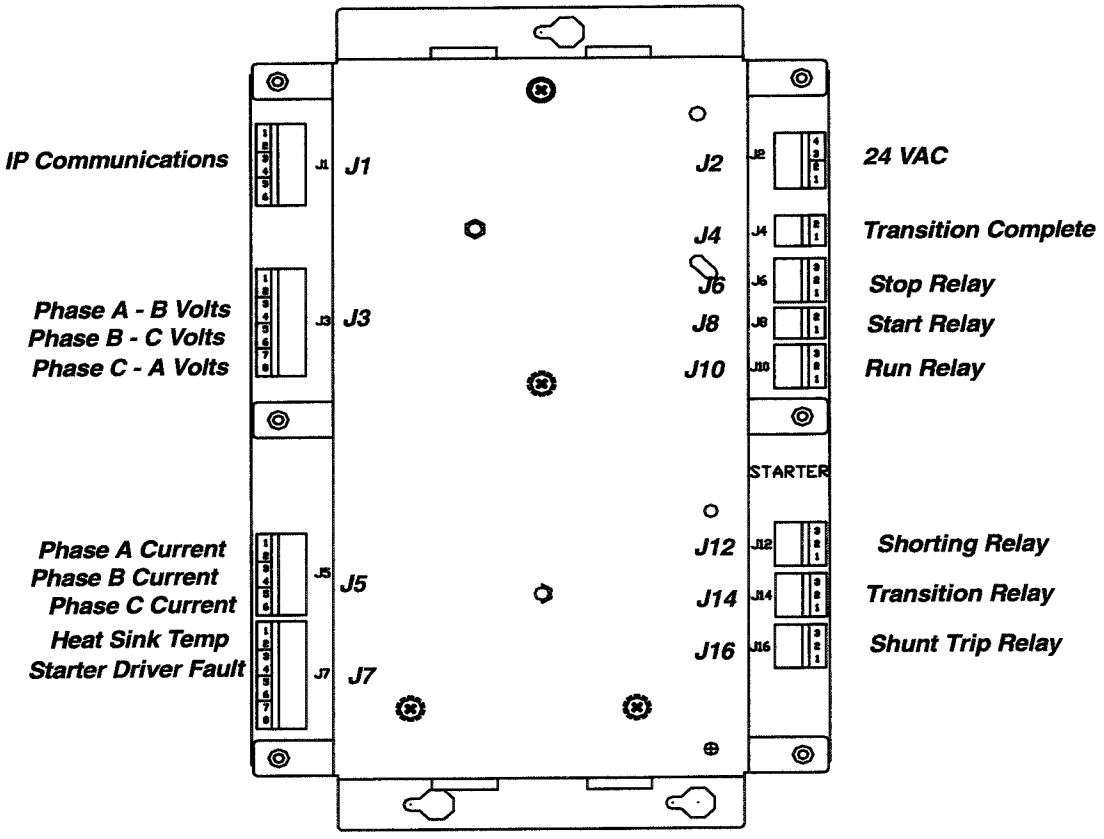

Stepper Module

The main function of 1U3 is to drive the Inlet Guide Vane Stepper motor (CTV) along with other functions. It does this in response to signals received from Chiller module 1U1.

Low Voltage (<30VAC) Inputs:

- 24VAC; IPC link
- Evaporator saturated refrigerant temperature
- Compressor discharge temperature (optional)
- Bearing temps, 1 and 2
- Inlet guide vane actuator Binary position indicator
- Condenser saturated refrigerant temperature

Low Voltage, High Amperage (30 VAC) Outputs:

- Vane actuator stepper motor

Figure 8
Stepper Module

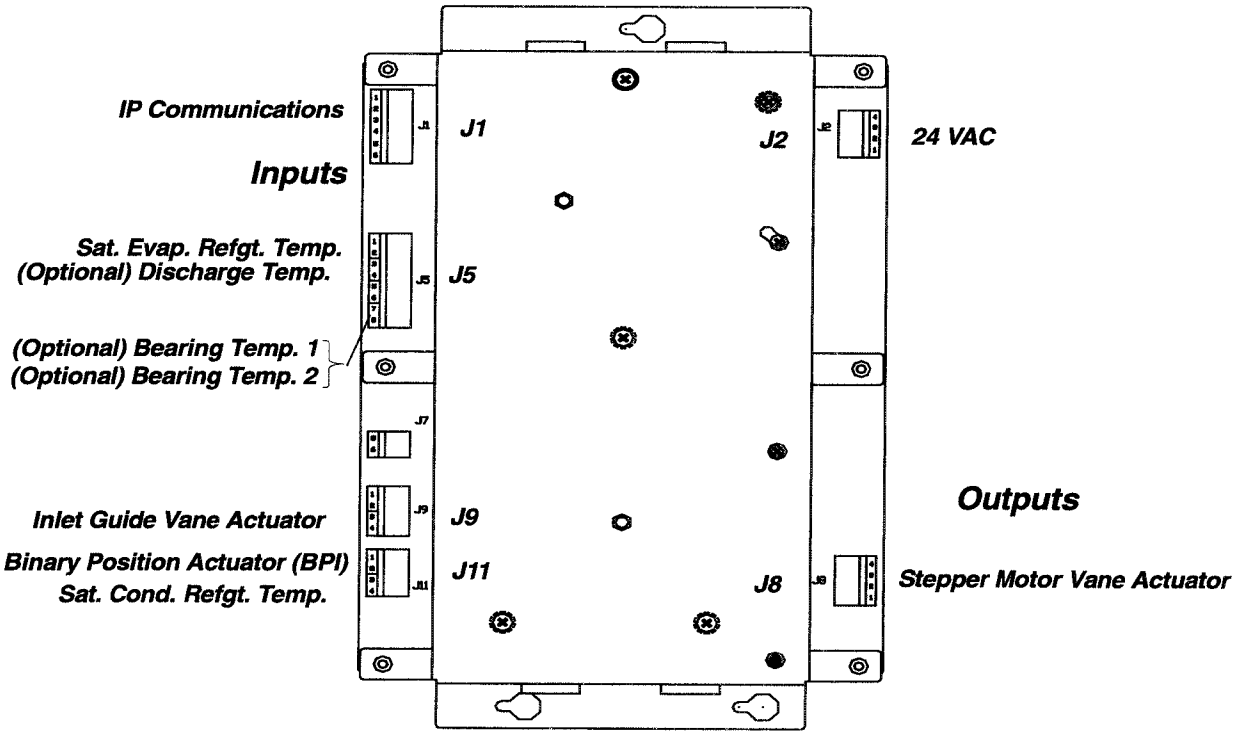

Duplex Module

The Duplex Chiller control is accomplished by the Duplex Control Module (DCM). The DCM is a Trane Communications Interface (TCI) based module. Its two main tasks are setpoint control and compressor staging/control

The DCM will actually control two separate UCP2 panels ("Panel A" and "Panel B"). These panels are for the most part identical and know nothing of each other. All coordination between panels is handled with the DCM.

Figure 9
Duplex Module

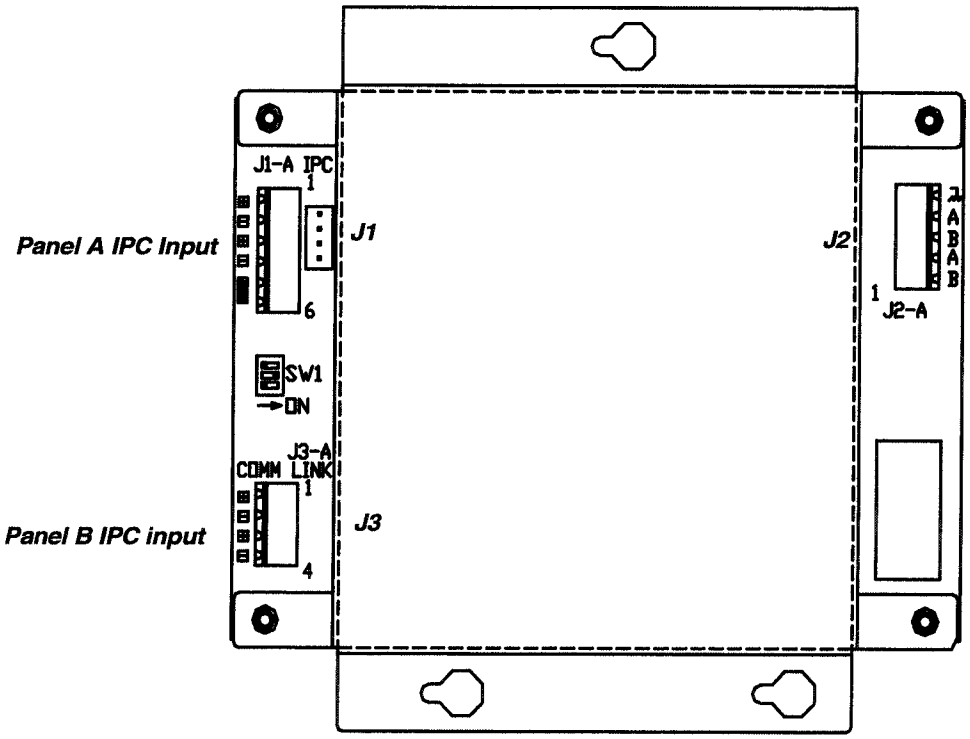

Module Dip Switch Settings

UCP2 Board Dip Switch Settings

Several of the UCP2 modules have dip switch settings on them, used to set up the board for 2-10 VDC or 4-20 mA signal inputs and/or outputs of the boards. The following are the various switch settings.

Chiller Module

	Switch	0-10V	4-20mA
External Base Loading	SW2-1	OFF	ON (SW2-2 and SW2-3 are not used)

Options Module

	Switch	0-10V	4-20mA
External Current Limit	SW2-1	OFF	ON (SW2-2 and SW2-3 are not used)
External Chilled Water	SW3-1	OFF	ON (SW3-2 and SW3-3 are not used)

Tracer COM 3

Switch	-1	-2	-3
SW1	OFF	OFF	OFF

Tracer COM 4

Switch	-1	-2	-3
SW1	OFF	ON	OFF

IPC Buffer

Switch	-1	-2	-3
SW1	OFF	OFF	ON

Duplex Control Module (DCM)

Switch	-1	-2	-3
SW1	ON	OFF	ON

Printer

Switch	-1	-2	-3
SW1	OFF	OFF	ON

The printer settings in the service settings menu must be set exactly the same on the printer being used. This includes:

- ~ printer baud rate
- ~ printer parity
- ~ printer data bits
- ~ printer stop bits
- ~ printer handshaking

The above settings are usually configured on a printer by DIP switches. The dip switch settings can be found in the manufacturers information provided with the printer.

Dip switch settings for the Okidata Microline 184 turbo printer follow:

Table 3
Switch Bank1

Parity Type odd parity even parity	Switch 1 on off
Parity No parity With parity	Switch 2 on off
Data Bits 8 bits 7 bits	Switch 3 on off
Handshaking Ready/Busy X-on/X-off	Switch 4 on off
Test Select Circuit Monitor	Switch 5 on off
Mode Select Print mode Test mode	Switch 6 on off

Busy Line Selection	Switches 7,8
SSD-Pin 11	off, on
SSD+ Pin 11	off,off
DTR- Pin20	on, on
RTS- Pin 4	on, off

Table 4
Switch Bank 2

Transmission Speed	Switch 1,2,3
19200	on, on, on
9600	off, on, on
4800	on, off, on
2400	off, off, on
1200	on, on, off
600	off, on, off
300	on, off, off
110	off, off, off
DSR Input Signal	Switch 4
Active	on
Inactive	off
Buffer	Switch 5
32 bytes	on
256 bytes	off
Busy Signal Timing	Switch 6
200 ms	on
1 second	off
DTR Signal	Switch 7
After power on	on
Printer selected	off
Not Used	Switch 8

Diagnosing A Non-Working Stepper Module

Method to Troubleshoot a UCP2 Stepper Module and Actuator

I. Overview

The UCP2 Stepper module is used to drive a Stepper Motor, which is used to open and close a valve or actuator. The big difference between a Stepper Motor and other types of motors, is that instead of just making the motor turn, you can control the angular position of the rotor inside the motor, and therefore control the position of your valve or actuator.

The Stepper Motor has two windings inside. To distinguish between the two, we call them Winding 1 and Winding 2. The Stepper module contains one drive circuit for each winding. Most of the failures you will probably deal with will result in the two internal fuses, F1 and F2, inside the Stepper module to open. These fuses protect the motor from damage, and are not easily accessible. Replacing these fuses in the field is not an acceptable option, because the original fuses have been through some special UL testing. We cannot guarantee safety to the customer if a blown fuse is replaced with another of a different type.

The Stepper Motor three states: Moving, Holding and Off:

1. In the Moving state, current flows bi-directionally through each of the two windings. The frequency and amount of current is electronically controlled by the Stepper module.
2. In the Holding State, current flows one way through each of the two windings. The amount of current is electronically controlled by the Stepper module.
3. The Off state occurs only when the Stepper module power is cycled. Until the Stepper receives an order from the Chiller module to move, no current flows through the Stepper Motor windings.

II. Quick Test of Stepper Board

A.This section will show how to test the main power points of the Stepper Board to get an idea of where the problem is.

1. If the UCP2 Control Panel is unpowered, unplug the J2 connectors from the Stepper board and continue to Section III to check motor and wiring resistances.
2. If the UCP2 Control Panel is powered, measure and compare the Power Input (J2) and the 4 Test Points at the right side of the Stepper board with Table 5 .

Table 5
UCP2 Stepper Module Test Point Voltage Limits

Connector	VAC	VDC
J2 -(1 to 2) or (3 to 4) J2 -(1 to case) or (2 to case) TP2: 5V to ground	20.4 to 33.12 VAC	0 VDC
	10 to 17 VAC	13.12 to 21.81 VDC
	0 VAC	4.8 to 5.2 VDC
TP4: 24V to ground	0 VAC	23.2 to 25.1 VDC
TP3: 14V to ground	0 VAC	11.45 to 15.75 VDC
TP1: 35V to ground	100m VAC to 72m VAC	26 to 48 VDC

If any of the voltages are out of range, there is a malfunction on the Stepper Board.

The majority of these malfunctions may be diagnosed by using . The ones marked with an asterisk have been seen in the field before:

Table 6
UCP2 Stepper Module Troubleshooting

Condition(s)	Possible Problem	Possible Cause(s)	(Solution(s)
Voltage at Test Points TP1-TP4 on Stepper module	Wiring between Stepper module and actuator motor is shorted to ground.	1. Wire insulation bared inside conduit.	1. Seal wire or run new wire through conduit.
Motor winding Resistance check Pin to conduit Motor does not move.		2. Wire insulation bared or pinched inside motor junction box.	2. Seal wire, or restrip and rewire motor junction box. See Table 4 for wiring diagram.
Voltage at Test Points TP1-TP4 on Stepper module Motor winding resistance check pin to pin fails. Motor does not move.	Wiring shorted together inside conduit between Stepper module and actuator motor.	Insulation bared.	Seal wire or run new wire through conduit. See Table 4 for wiring diagram.

Table 6
UCP2 Stepper Module Troubleshooting (Continued)

Condition(s)	Possible Problem	Possible Cause(s)	(Solution(s)
	Wiring shorted together at board edge connector J6 or J8	*1. metal shavings from drilling into UCP2 Panel form bridge. 2. Loose wire strands form bridge.	1. Inspect J6 and J8 connectors. Remove any metal shavings bridging the wires before powering module. 2. Restrip and rewire board edge connector.
	Wires shorted together inside motor junction box.	Insulation bared.	Seal wire or run new wire through conduit. See Table 4 for wiring diagram.
Stepper module TP1 - TP4 OK. Motor winding resistance check OK. Motor does not move.	Motor does not move and steps display does not change on CLD when using manual vane control.	UCP2 is not in Stop Mode and Chiller module is overriding manual vane control.	Hit stop button on CLD, and try again.
Stepper module TP1 - TP4 OK. Motor winding resistance check OK. Motor runs backward.	Motor runs backward	Motor is miswired.	Unplug motor connector (J6 or J8) from the Stepper module. Use Tables 3 and 4 to sway wire pairs (1, 3) or ((2, 4) so the motor is wired properly.

II. Check Stepper Motor and Wiring for Shorts and Opens

A. During this stage, motor winding and wire resistances will be measured to ensure proper continuity.

1 If the unit is powered, hit the stop button on the CLD and use manual mode in the service tools menu to step the actuators all the way to position 0.

2 Unplug power (J2 connector) from the Stepper module.

3 Unplug J6 and J8 from the board.

4 Measure the DC resistance of one of the motor windings by measuring between what would be Pin (1,3) or Pin (2,4) on the Stepper Board at the unplugged connector (See Table 7).

5 If the resistance is lower than the limits in Table 7 there is a short in the wiring between the Stepper module and the motor or the in motor winding. Note that nominal values are not including wire resistances.

6 If the resistance is higher than the limits in Table 7 the wiring between the Stepper module and the motor or a winding is open. Note that nominal values are not including wire resistances.

Table 7
Motor Winding Resistance

J6 or J8 Connector Pin	Acceptable DC Resistance Range	CLV Nominal Resistance
(4 to 3)	Open Circuit	NA
(4 to 2): WI	50 mOhm to 5 Ohm	1.68 Ohm
(4 to 1)	Open Circuit	N/A
(3 to 2)	Open Circuit	N/A
(3 to 1):W2	50 mOhm to 5 Ohm	1.68 Ohm
(2 to 1)	Open Circuit	N/A
(4 to Conduit)	Open Circuit	N/A
(3 to Conduit)	Open Circuit	N/A
(2 to conduit)	Open Circuit	N/A
(1 to conduit)	Open Circuit	N/A

7 If the winding resistance is in the range, plug the J connector back into the appropriate socket.

8 Perform steps 3-7 for each winding of the motor on the Stepper module.

9 If there is a short or an open, you will need to check the wiring to the motor, and then check the motor.

10 If the windings resistance check passes, and you have not measured the Stepper module voltages while it is powered, then plug J2 back into the module and go back to Section II, Quick Test of Stepper Board.

B. If you need to disconnect the wires going to the motor for any reason, Table 8 is a wiring table you can use to reconnect them.

Table 8
Stepper Motor Connections

JB or J8 Connector Pin# on Stepper	Motor Winding Output Signal Name	Stepper Motor Terminal Connection
4	1+	3
3	2+	5
2	1-	1
1	2-	4

IV. Motor Voltages for CTV Stepper Motor

A. With the motor connector J6 (or J8) connected to the Stepper Board, and the Stepper powered, measure the AC and DC voltages of the connector pins, and compare to Table 9 and Table 10 .

Table 9
Motor Voltages with Actuator Holding

Connector Pin	AC Voltage	DC Voltage
J6 - (4 to 3)	0 or (5.8 to 10)	- 400 mV to +400 mV
J6 - (4 to 2)	5.8-8.2	+ 400 mV, but not 0mV
J6 - (3 to 1)	0 or(5.8-10)	- 400 mV to +400 mV
J6 - (3 to 2)	0 or(5.8-10)	- 400 mV to +400 mV
J6-(3 to 1)	5.8 to 8.2	+400 mV, but not 0 mV
J6- (2 to1)	0 or (5.8-10)	- 400 mV to +400 mV
J6 -(4 to conduit)	0 or (5.8-8)	(0.3-0.43) or (1.04- 1.135)
J6 -(3 to conduit)	0 or (5.8-8)	(0.3-0.43) or (1.04- 1.135)
J6 -(2 to conduit)	0 or (5.8-8)	(0.3-0.43) or (1.04- 1.135)
J6 -(1 to conduit)	0 or(5.8 -8)	(0.3-0.43) or (1.04- 1.135)

Table 10
Motor Voltages with Actuator Moving

Connector Pin	AC Voltage	DC Voltage
J6 - (4 to 3)	(16.6-25.9)	-720 mV to +720 mV
J6 - (4 to 2)	(20.8-27.5)	-720 mV to +720mV
J6 - (4 to 1)	16.6-25.9)	-720mVto +720mV
J6 - (3 to 2)	16.6-25.9)	-720mV to +720mV
J6 - (3 to 1)	20.8-27.5)	-720mV to+720mV
J6 - (2 to 1)	(16.6 - 25.9)	-720 mV to +720mV
J6 - (4 to conduit)	(11.4 - 17.3)	(9.1 -10.1)
J6 - (4 to conduit)	(11.4 - 17.3)	(9.1 -10.1)
J6 - (4 to conduit)	(11.4 - 17.3)	(9.1 -10.1)
J6 - (4 to conduit)	(11.4 - 17.3)	(9.1 -10.1)

Procedures For Module Set-Up

External Current Limit Setpoint

Option module J7-11, -12 (-, +)

Isolated 2-10 VDC or 4-20 mA

UCP2 will accept either a 2-10 VDC or 4-20 mA analog input suitable for customer connection to set the unit external current limit setpoint. 2-10 VDC and 4-20 mA shall each correspond to a 40 to 120% RLA range. UCP2 will limit the maximum ECLS to 100%.

The following must be "Set'.

1 SW2-1 OFF for 2-10 VDC
ON for 4-20 mA

2 Current Limit Setpoint Source: External Source

3 External Current Limit Setpoint: Installed Machine Configuration menu

4 External Setpoint Inputs: 2-10 VDC or 4-20 mA (Machine Configuration menu)

Refrigerant Monitor Input

Analog type input

4-20 mA input signal to the Circuit module J5-5 and J5-6. This represents 0-100 ppm.

Under machine configuration "Refrigerant Monitor Type" is '01' for Analog.

Typical input if using an RMWC generation Monitor.

IPC Monitor (Requires RMWD monitor with Version 2 Software) Direct communication to the CLD via the IPC.

Under Machine Configuration "Refrigerant Monitor Type" is '02' for IPC Monitor.

Also allows monitor calibration and setup. Please note that the monitor cannot have a local display and communicate with the UCP2. If the customer requires a local display, he can connect an RMWD style monitor up like an analog type previously described.

% RLA Output

Options module J7-3,-4

-2-10 VDC

As an option, the UCM shall provide a 0-10 VDC analog output to indicate % RLA. The transfer function shall be 2 to 10 VDC corresponding to 0 to 120% RLA.

External Chilled Water Setpoint

The External Chilled Water Setpoint allows a customer to change the chilled water setpoint from a remote location. The External Chilled Water Setpoint is found on Options module terminals J9-4 and J9-5.

UCP2 accepts either a 2-10 VDC or 4-20 mA analog input suitable for customer connection to set the unit leaving chilled water setpoint. 2-10 VDC and 4-20 mA shall each correspond to a 0 to 65°F (-17.8 to 18.3°C) CWS range. For input signals beyond the 2-10 VDC or 4-20 mA range, an information diagnostic is called and the active chilled water setpoint will default to the front panel.

UCP2 uses the following equations:

	Voltage Signal	Current Signal
As generated from external source	VDC=.12308*(°F)+2	mA=.24615(°F)+4
As processed by UCP2	°F=8.125*(VDC)-16.25	°F=4.0625(mA)-16.25

The following graph shows External Chilled Water Setpoint with a 4-20 mA input:

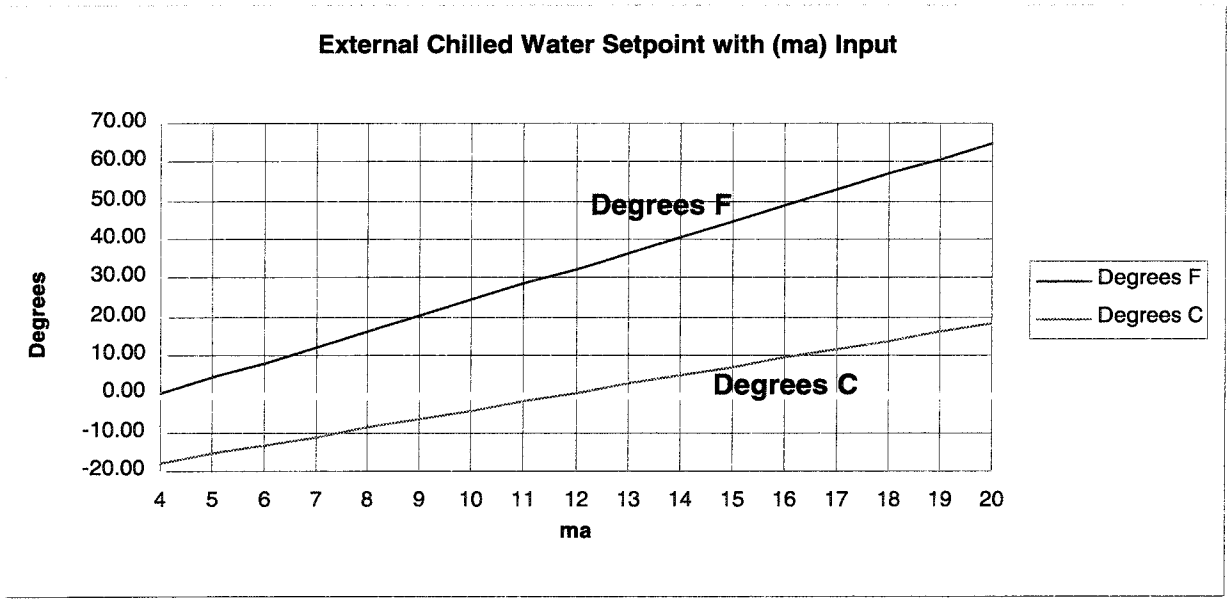

The following graph shows External Chilled Water Setpoint with a 2-10 VDC input:

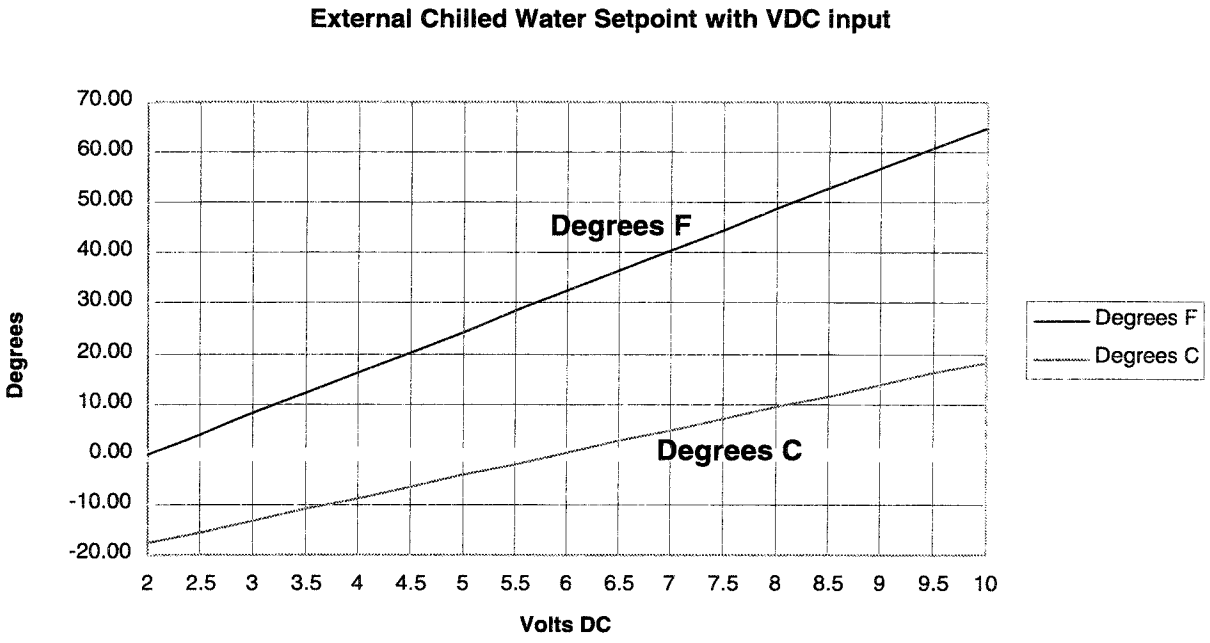

The following items need to be set:

1 SW3-1 OFF for 2-10 VDC, ON for 4-20 mA.

2 Chilled Water Reset type: Disable - Operator Settings Group

3 Chilled Water Setpoint Source: External - Operator Settings Group

4 Setpoint Source Override: None - Operator Settings Group

5 External Chilled Water Setpoint: Installed - Service Settings Group Machine Configuration

6 In Machine Configuration, set to 4-20 mA or 2-10 VDC; 4-20 is default

7 Grounding of the BAS and UCP2 systems may be different. To clear this, connect a 9 VDC battery to J9 (4, 8). This acts as an isolated source and you should read 9 VDC. If you do not read 9 VDC, a grounding problem exists.

External Auto-Stop:

The external Auto-Stop input allows the operator to enable and disable chiller operation through a remotely located set of contacts.

A binary input to the UCP2 is provided that will enable the chiller to operate when it is closed and disable operation when it is open. An indication is displayed on the front panel when the chiller is disabled through the remote Auto-Stop.

The Auto-Stop input allows the operator to use a remote signal, such as a time clock or a generic BAS, to signal the start of the chiller. Disabling the chiller through this input will not result in a diagnostic since it is an expected routine shutdown.

UCP2 accepts an isolated contact closure input suitable for customer connection to put the unit in either AUTO or STOP from a remote device. This input has priority over the unit switch when the unit switch is in AUTO. This input does not have priority over the unit switch when the unit switch is in STOP. The input is closed for external AUTO operation and open to put the unit in external STOP. The external stop is a friendly shutdown, i.e. the chiller will unload before the stop command is given.

The External Auto-Stop input is located on Chiller module terminals J5-1 and J5-2.

Analog Input Table Abbreviations

The information below is an explanation of abbreviations used in Analog Input Tables that are shown in this section.

Oil Pressures

Water Pressures

A1: Entering and Leaving Evap Temp. Purge Compressor Suction Temp.

A2: Oil Temp.

Entering and Leaving Condenser

Aux HR Entering and Leaving Temp.

Compressor Discharge Ref Temp.

Bearing Temps 1 and 2

Saturated Cond. Refrigerant Temp.

Outdoor Air Temperature.

A4: Saturated Evap Temp.

A6: Compressor Motor Winding Temp 75 Ohm

NOTE: *A1, A2 and A4 are the same sensor.*

NOTE:
1. Min. Res. and Max. Res. = Minimum and Maximum Resistance in Ohms.
2. Min Vterm. and Max. Vterm = Minimum and Maximum DC Voltage measure at the appropriate module terminal.

Table 11
Pressure vs Voltage for Oil Pressures

Oil Pressure (PSIG)	Differential Voltage		
	Min	Nom	Max
-15	-0.0017	0.0000	0.0017
-10	0.0033	0.0050	0.0067
-5	0.0083	0.0100	0.0117
-4	0.0093	0.0110	0.0127
-3	0.0103	0.0120	0.0137
-2	0.0113	0.0130	0.0147
-1	0.0122	0.0140	0.0158

Table 11
Pressure vs Voltage for Oil Pressures (Continued)

Oil Pressure (PSIG)	Differential Voltage		
	Min	Nom	Max
0	0.0132	0.0150	0.0168
1	0.0142	0.0160	0.0178
2	0.0151	0.01 70	0.0189
3	0.0161	0.0180	0.0199
4	0.0171	0.0190	0.0209
5	0.0180	0.0200	0.0220
6	0.0190	0.0210	0.0230
7	0.0199	0.0220	0.0241
8	0.0209	0.0230	0.0251
9	0.0218	0.0240	0.0262
10	0.0228	0.0250	0.0272
11	0.0237	0.0260	0.0283
12	0.0247	0.0270	0.0293
13	0.0256	0.0280	0.0304
14	0.0266	0.0290	0.0314
15	0.0275	0.0300	0.0325
16	0.0285	0.0310	0.0335
17	0.0294	0.0320	0.0346
18	0.0303	0.0330	0.0357
19	0.0313	0.340	0.0367
20	0.0322	0.0350	0.0378
25	0.0369	0.0400	0.0431
30	0.0417	0.0450	0.0483
35	0.0464	0.0500	0.0536

Table 12

Voltages and Resistances of Oil Pressure Input Terminals			
	Min	Nom	Max
+5V to GND	4.75	5.0	5.25
V- to GND	1.6	2.0	2.5
V+ to GND	1.6	2.0	2.5

Voltages and Resistances of Water Pressure Transducers Input Terminals			
	Min	**Nom**	**Max**
+5V to GND	4.75	5.0	5.25
V- to GND	1.6	2.0	2.5
V+ to GND	1.6	2.0	2.5

Table 13
Pressure vs Voltage for Water Pressures

Water Pressure (PSIG)	Nom	Water Pressure (PSIG)	Nom
0	0.0	76	0.0253
1	0.0003	77	0.0257
2	0.0007	78	0.0260
3	0.0010	79	0.0263
4	0.0013	80	0.0267
5	0.0017	81	0.0270
6	0.0020	82	0.0273
7	0.0023	83	0.0277
8	0.0027	84	0.0280
9	0.0030	85	0.0283
10	0.0033	86	0.0287
11	0.0037	87	0.0290
12	0.0040	88	0.0293
13	0.0043	89	0.0297
14	0.0047	90	0.0300
15	0.0050	91	0.0303
16	0.0053	92	0.0307
17	0.0057	93	0.0310
18	0.0060	94	0.0313
19	0.0063	95	0.0317
20	0.0067	96	0.0320
21	0.0070	97	0.0323
22	0.0073	98	0.0327
23	0.0077	99	0.0330
24	0.0080	100	0.0333
25	0.0083	101	0.0337
26	0.0087	102	0.0340

Table 13
Pressure vs Voltage for Water Pressures (Continued)

Water Pressure (PSIG)	Nom	Water Pressure (PSIG)	Nom
27	0.0090	103	0.0343
28	0.0093	104	0.0347
29	0.0097	105	0.0350
30	0.0100	106	0.0353
31	0.0103	107	0.0357
32	0.0107	108	0.0360
33	0.0110	109	0.0363
34	0.0113	110	0.0367
35	0.0117	111	0.0370
36	0.0120	112	0.0373
37	0.0123	113	0.0377
38	0.0127	114	0.0380
39	0.0130	115	0.0383
40	0.0133	116	0.0387
41	0.0137	117	0.0390
42	0.0140	118	0.0393
43	0.0143	119	0.0397
44	0.0147	120	0.0400
45	0.0150	121	0.0403
46	0.0153	122	0.0407
47	0.0157	123	0.0410
48	0.0160	124	0.0413
49	0.0163	125	0.0417
50	0.0167	126	0.0420
51	0.0170	127	0.0423
52	0.0173	128	0.0427
53	0.0177	129	0.0430
54	0.0180	130	0.0433
55	0.0183	131	0.0437
56	0.0187	132	0.0440
57	0.0190	133	0.0443
58	0.0193	134	0.0447
59	0.0197	135	0.0450
60	0.0200	136	0.0453

Table 13
Pressure vs Voltage for Water Pressures (Continued)

Water Pressure (PSIG)	Nom	Water Pressure (PSIG)	Nom
61	0.0203	137	0.0457
62	0.0207	138	0.0460
63	0.0210	139	0.0463
64	0.0213	140	0.0467
65	0.0217	141	0.0470
66	0.0220	142	0.0473
67	0.0223	143	0.0477
68	0.0227	144	0.0480
69	0.0230	145	0.0483
70	0.0233	146	0.0487
71	0.0237	147	0.0490
72	0.0240	148	0.0493
73	0.0243	149	0.0497
74	0.0247	150	0.0500
75	0.0250		

Voltages and Resistances of Pressure Input Terminals			
	Min	**Nom**	**Max**
+5V to GND	4.75	5.0	5.25
V- to GND	1.6	2.0	2.5
V+ to GND	1.6	2.0	2.5
Water Pressure			
Rin	420	470	520
Rout	600	900	1.2K

Table 14

Purge Compressor Suction Temp.

AI Analog Input

Thermistor Accuracy = 0.54°F from -14 to 79°F

Type U Thermistor Temperature Versus Resistance and Terminal Voltage Table for a pullup resistor of 24900 Ohms.

Used to sense temperatures at the following point:

1. Purge Compressor Suction Temp. CVHE/F/G

Temp °F	Min Res	Max Res	Min Vterm	Max Vterm
-10.0	119172	123480	4.115	4.145
-5.0	101107	104703	3.992	4.024
-4.0	97868	101337	3.966	3.999
-3.0	94743	98090	3.940	3.973
-2.0	91726	94957	3.913	3.946
-1.0	88816	91934	3.886	3.920
0.0	86006	89016	3.858	3.893
1.0	83293	86199	3.830	3.865
2.0	80675	83480	3.802	3.837
3.0	78146	80855	3.773	3.809
4.0	75705	78320	3.743	3.780
5.0	73347	75873	3.714	3.751
10.0	62706	64832	3.560	3.600
15.0	53738	55532	3.399	3.441
16.0	52119	53854	3.366	3.408
17.0	50554	52231	3.332	3.375
18.0	49040	50663	3.299	3.341
19.0	47577	49145	3.265	3.308
20.0	46161	47678	3.231	3.274
25.0	39742	41029	3.058	3.102
30.0	34292	35386	2.881	2.926
35.0	29713	30628	2.705	2.750
40.0	25830	26611	2.532	2.577
45.0	22512	23180	2.361	2.405
50.0	19668	20242	2.194	2.237
55.0	17225	17718	2.033	2.075
60.0	15120	15546	1.879	1.919
65.0	13303	13670	1.731	1.770
70.0	11729	12048	1.592	1.629
75.0	10364	10641	1.462	1.496

Table 15
Evap. Entering and Leaving Water Temp.

A1 Analog Input

Thermistor Accuracy = 0.54°F from 15 to *140*°F

Type U Thermistor Temperature Versus Resistance and Terminal Voltage Table for a pullup resistor of 24900 Ohms.

Used to sense temperatures at the following point:

1. Evap. Entering and Leaving Water Temp. Pair CVHE/F/G

Table 15

Temp °F	Min Res	Max Res	Min Vterm	Max Vterm
15.0	53738	55532	3.399	3.441
20.0	46161	47678	3.231	3.274
21.0	44791	46259	3.196	3.240
22.0	43466	44886	3.162	3.206
23.0	42183	43558	3.127	3.171
24.0	40943	42273	3.092	3.137
25.0	39742	41029	3.058	3.102
26.0	38580	39826	3.022	3.067
27.0	37455	38661	2.987	3.032
28.0	36367	37534	2.952	2.997
29.0	35312	36442	2.916	2.962
30.0	34292	35386	2.881	2.926
31.0	33304	34363	2.845	2.891
32.0	32358	33365	2.810	2.855
33.0	31448	32423	2.775	2.820
34.0	30566	31511	2.740	2.785
35.0	29713	30628	2.705	2.750
36.0	28886	29773	2.671	2.715
37.0	28086	28944	2.636	2.681
38.0	27310	28142	2.601	2.646
39.0	26559	27364	2.566	2.611
40.0	25830	26611	2.532	2.577
41.0	25125	25881	2.497	2.542
42.0	124441	25174	2.463	2.508
43.0	23778	24489	2.429	2.473
44.0	23135	23824	2.395	2.439
45.0	22512	23180	2.361	2.405

Table 15 (Continued)

Temp °F	Min Res	Max Res	Min Vterm	Max Vterm
46.0	21908	22556	2.327	2.371
47.0	21322	21950	2.294	2.337
48.0	20754	21363	2.260	2.304
49.0	20203	20794	2.227	2.270
50.0	19668	20242	2.194	2.237
55.0	17225	17718	2.033	2.075
60.0	15120	15546	1.879	1.919
65.0	13303	13670	1.731	1.770
70.0	11729	12048	1.592	1.629
75.0	10364	10641	1.462	1.496
80.0	9177	9418	1.339	1.372

Table 16
Saturated Cond. Refrigerant Temp.

A2 Analog Input

Thermistor Accuracy = 0.54°F from 15 to 140°F

Type U Thermistor Temperature Versus Resistance and Terminal Voltage Table for a pullup resistor of 6980 Ohms.

Saturated Cond. Refrigerant Temp CVHE/F/G

Table 16

Temp °F	Min Res	Max Res	Min Vterm	Max Vterm
15.0	53738	55532	4.416	4.435
17.0	50554	52231	4.384	4.404
19.0	47577	49145	4.350	4.372
21.0	44791	46259	4.316	4.338
23.0	42183	43558	4.280	4.303
25.0	39742	41029	4.242	4.266
27.0	37455	38661	4.204	4.228
29.0	35312	36442	4.163	4.189
31.0	33304	34363	4.122	4.149
33.0	31448	32423	4.080	4.107
35.0	29713	30628	4.037	4.065
37.0	28086	28944	3.992	4.021
39.0	26559	27364	3.946	3.976
41.0	25125	25881	3.900	3.930
43.0	23778	24489	3.852	3.883
45.0	22512	23180	3.803	3.835
47.0	21322	21950	3.752	3.785
49.0	20203	20794	3.701	3.735
51.0	19150	19706	3.649	3.684
53.0	18158	18682	3.596	3.631
55.0	17225	17718	3.542	3.578
57.0	16346	16810	3.488	3.524
59.0	15517	15955	3.432	3.469
61.0	14735	15148	3.376	3.413
63.0	13998	14388	3.319	3.357
65.0	13303	13670	3.262	3.300
67.0	12646	12993	3.204	3.243

Table 16 (Continued)

Temp °F	Min Res	Max Res	Min Vterm	Max Vterm
69.0	12026	12354	3.146	3.185
71.0	11441	11750	3.088	3.127
73.0	10887	11180	3.029	3.068
75.0	10364	10641	2.970	3.010
77.0	9870	10131	2.911	2.951
79.0	9402	9649	2.851	2.891
81.0	8959	9193	2.792	2.832
83.0	8539	8761	2.733	2.773
85.0	8142	8353	2.674	2.714
87.0	7766	7965	2.615	2.655
89.0	7410	7599	2.557	2.597
90.0	7239	7422	2.528	2.567
91.0	7072	7251	2.498	2.538
92.0	6910	7084	2.470	2.509
93.0	6751	6921	2.441	2.480
94.0	6597	6763	2.412	2.452
95.0	6447	6608	2.383	2.423
96.0	6301	6458	2.355	2.394
97.0	6159	6312	2.326	2.366
98.0	6020	6169	2.298	2.337
99.0	5885	6030	2.270	2.309
100.0	5754	5895	2.242	2.281
101.0	5625	5763	2.214	2.253
102.0	5500	5634	2.187	2.225
103.0	5378	5509	2.159	2.198
104.0	5260	5387	2.132	2.170
105.0	5144	5268	2.105	2.143
107.0	4921	5039	2.051	2.089
109.0	4709	4821	1.999	2.036
111.0	4507	4614	1.946	1.983
113.0	4315	4417	1.895	1.931
115.0	4133	4230	1.845	1.880
117.0	3959	4051	1.795	1.830
119.0	3794	3882	1.747	1.781
121.0	3636	3720	1.699	1.733

Table 16 (Continued)

Temp °F	Min Res	Max Res	Min Vterm	Max Vterm
123.0	3487	3566	1.653	1.686

Table 17
Bearing Temp., Oil Temp. and Compressor Discharge Temp.

A2 Analog Input

Thermistor Accuracy = 3.24°F from 32 to 100°F.

Thermistor Accuracy = 0.72xF from 100 to 201°F.

Type U Thermistor Temperature Versus Resistance and Terminal Voltage Table for a pullup resistor of 6980 Ohms.

Used to sense temperatures at the following points:

1. **Bearing #1 Temp CVHE/F/G (Journal Bearing)**
2. **Bearing #2 Temp CVHE/F/G (Thrust Bearing)**
3. **Oil Temp CVHE/F/G**
4. **Compressor Discharge Temp CVHE/F/G**

Table 17

Temp °F	Min Res	Max Res	Min Vterm	Max Vterm
90.0	6798	7862	2.453	2.642
91.0	6643	7679	2.424	2.613
92.0	6492	7501	2.395	2.583
93.0	6345	7328	2.367	2.554
94.0	6201	7159	2.338	2.525
95.0	6062	6994	2.310	2.496
96.0	5925	6834	2.282	2.467
97.0	5793	6678	2.254	2.438
98.0	5663	6526	2.226	2.409
99.0	5537	6378	2.199	2.381
100.0	5730	5918	2.238	2.285
101.0	5603	5786	2.210	2.257
102.0	5478	5657	2.183	2.229
103.0	5357	5531	2.155	2.202
104.0	5238	5408	2.128	2.174
105.0	5123	5289	2.101	2.147
106.0	5011	5172	2.074	2.120
107.0	4901	5058	2.048	2.093
108.0	4794	4948	2.021	2.066
109.0	4690	4840	1.995	2.039
110.0	4589	4734	1.969	2.013
111.0	4490	4632	1.943	1.987
112.0	4393	4532	1.917	1.961

Table 17 (Continued)

Temp °F	Min Res	Max Res	Min Vterm	Max Vterm
113.0	4299	4434	1.892	1.935
114.0	4207	4339	1.866	1.909
115.0	4117	4246	1.841	1.884
116.0	4029	4155	1.816	1.859
117.0	3944	4067	1.792	1.834
118.0	3861	3980	1.767	1.809
119.0	3779	3896	1.743	1.785
120.0	3700	3814	1.719	1.760

Table 18
Bearing Temp., Oil Temp. and Compressor Discharge Temp.

Temp °F	Min Res	Max Res	Min Vterm	Max Vterm
121.0	3623	3734	1.696	1.736
122.0	3547	3655	1.672	1.712
123.0	3474	3579	1.649	1.689
124.0	3402	3505	1.626	1.666
125.0	3332	3433	1.604	1.643
126.0	3264	3362	1.581	1.620
127.0	3197	3293	1.559	1.598
128.0	3132	3226	1.537	1.575
129.0	3069	3160	1.516	1.553
130.0	3006	3096	1.494	1.531
131.0	2946	3033	1.473	1.510
132.0	2886	2971	1.452	1.488
133.0	2828	2912	1.431	1.467
134.0	2772	2853	1.411	1.447
135.0	2716	2796	1.391	1.426
136.0	2662	2740	1.371	1.406
137.0	2610	2685	1.351	1.385
138.0	2558	2632	1.331	1.365
139.0	2508	2580	1.312	1.346
140.0	2458	2529	1.293	1.326
141.0	2410	2479	1.274	1.307

Table 18
Bearing Temp., Oil Temp. and Compressor Discharge Temp. (Continued)

Temp °F	Min Res	Max Res	Min Vterm	Max Vterm
142.0	2363	2431	1.256	1.288
143.0	2317	2383	1.237	1.269
144.0	2272	2336	1.219	1.251
145.0	2228	2291	1.201	1.233
146.0	2185	2246	1.184	1.215
147.0	2143	2203	1.166	1.197
148.0	2101	2160	1.149	1.179
149.0	2061	2119	1.132	1.162
150.0	2022	2078	1.115	1.145
151.0	1983	2039	1.099	1.128
153.0	1909	1962	1.066	1.095
155.0	1837	1888	1.035	1.063
157.0	1769	1818	1.004	1.031
159.0	1704	1750	0.975	1.001
161.0	1641	1685	0.946	0.971
163.0	1581	1624	0.917	0.942
165.0	1524	1564	0.890	0.915
167.0	1468	1508	0.864	0.887
169.0	1416	1453	0.838	0.861
171.0	1365	1401	0.813	0.835
173.0	1316	1351	0.789	0.810
175.0	1270	1303	0.765	0.786
177.0	1225	1257	0.742	0.763
179.0	1182	1213	0.720	0.740
181.0	1141	1170	0.699	0.718
183.0	1102	1130	0.678	0.697
185.0	1064	1091	0.658	0.676
187.0	1027	1053	0.638	0.656
189.0	992	1017	0.619	0.636
191.0	959	983	0.601	0.617
193.0	926	949	9.583	0.599
195.0	895	917	0.565	0.581
197.0	865	887	0.549	0.564
199.0	837	857	0.532	0.547
201.0	809	829	0.517	0.531

Table 19
Auxiliary HR Ent. and Condenser Ent. and Leaving Water Temp.

A2 Analog Input

Thermistor Accuracy = 0.54°F from 15 to 140°F

Type U Thermistor Temperature Versus Resistance and Terminal Voltage Table for a pullup resistor of 6980 Ohms.

Used to sense temperatures at the following point:

1. Auxiliary HR Entering and Leaving Water Temp. Pair CVHE/F

2. Condenser Ent. and Leaving Water Temp. Pair CVHE/F

Table 19

Temp F	Min Res	Max Res	Min Vterm	Max Vterm
15546	15120	15546	3.404	3.441
61.0	14735	15148	3.376	3.413
62.0	14361	14762	3.348	3.385
63.0	13998	14388	3.319	3.357
64.0	13645	14024	3.291	3.329
65.0	13303	13670	3.262	3.300
66.0	12970	13327	3.233	3.272
67.0	12646	12993	3.204	3.243
68.0	12332	12669	3.175	3.214
69.0	12026	12354	3.146	3.185
70.0	11729	12048	3.117	3.156
71.0	11441	11750	3.088	3.127
72.0	11160	11461	3.058	3.098
73.0	10887	11180	3.029	3.068
74.0	10622	10907	2.999	3.039
75.0	10364	10641	2.970	3.010
76.0	10113	10383	2.940	2.980
77.0	9870	10131	2.911	2.951
78.0	9632	9887	2.881	2.921
79.0	9402	9649	2.851	2.891
80.0	9177	9418	2.822	2.862
81.0	8959	9193	2.792	2.832
82.0	8746	8974	2.763	2.803
83.0	8539	8761	2.733	2.773
84.0	8338	8554	2.704	2.744
85.0	8142	8353	2.674	2.714

Table 19 (Continued)

Temp F	Min Res	Max Res	Min Vterm	Max Vterm
86.0	7952	8156	2.645	2.685
87.0	7766	7965	2.615	2.655
88.0	7586	7779	2.586	2.626
89.0	7410	7599	2.557	2.597
90.0	7239	7422	2.528	2.567
91.0	7072	7251	2.498	2.538
92.0	6910	7084	2.470	2.509
93.0	6751	6921	2.441	2.480
94.0	6597	6763	2.412	2.452
95.0	6447	6608	2.383	2.423
96.0	6301	6458	2.355	2.394
97.0	6159	6312	2.326	2.366
98.0	6020	6169	2.298	2.337
99.0	5885	6030	2.270	2.309
100.0	5754	5895	2.242	2.281
101.0	5625	5763	2.214	2.253
102.0	5500	5634	2.187	2.225
103.0	5378	5509	2.159	2.198
104.0	5260	5387	2.132	2.170
105.0	5144	5268	2.105	2.143
106.0	5031	5152	2.078	2.116
107.0	4921	5039	2.051	2.089
108.0	4813	4929	2.025	2.062
109.0	4709	4821	1.999	2.036
110.0	4607	4716	1.972	2.009
111.0	4507	4614	1.946	1.983
112.0	4410	4514	1.921	1.957
113.0	4315	4417	1.895	1.931
114.0	4223	4322	1.870	1.906
115.0	4133	4230	1.845	1.880
116.0	4045	4139	1.820	1.855
117.0	3959	4051	1.795	1.830
118.0	3876	3965	1.771	1.806
119.0	3794	3882	1.747	1.781
120.0	3714	3800	1.723	1.757

Table 19 (Continued)

Temp F	Min Res	Max Res	Min Vterm	Max Vterm
121.0	3636	3720	1.699	1.733
122.0	3561	3642	1.676	1.709
123.0	3487	3566	1.653	1.686
124.0	3415	3492	1.630	1.662
125.0	3345	3420	1.607	1.640
126.0	3276	3350	1.585	1.617
127.0	3209	3281	1.562	1.594
127.0	3209	3281	1.562	1.594
127.0	3209	3281	1.562	1.594
128.0	3144	3214	1.540	1.572
129.0	3080	3148	1.519	1.550
130.0	3017	3084	1.497	1.528
131.0	2956	3022	1.476	1.507
132.0	2897	2961	1.455	1.486
133.0	2839	2901	1.434	1.464
134.0	2782	2843	1.414	1.444
135.0	2726	2786	1.393	1.423
136.0	2672	2730	1.373	1.403
137.0	2619	2676	1.354	1.383
138.0	2567	2623	1.334	1.334
139.0	2517	2571	1.315	1.315
140.0	2467	2520	1.296	1.296

Table 20
Outdoor Air Temp.

A2 Analog Input

Thermistor Accuracy = 0.90°F from -10 to 0°F

Thermistor Accuracy =0.540°F from 0 to 700°F

Thermistor Accuracy = 1.80°F from 70 to 150°F

Type U Thermistor Temperature Versus Resistance and Terminal Voltage Table for a pullup resistor of 6980 Ohms.

Used to sense temperatures at the following point:

1. Outdoor Air Temp. CVHE/F/G

Table 20

Temp °F	Min Res	Max Res	Min Vterm	Max Vterm
-10.0	117759	124893	4.713	4.729
-5.0	99928	105882	4.666	4.685
0.0	86006	89016	4.617	4.630
5.0	73347	75873	4.557	4.573
10.0	62706	64832	4.490	4.508
15.0	53738	55532	4.416	4.435
20.0	46161	47678	4.333	4.355
25.0	39742	41029	4.242	4.266
30.0	34292	35386	4.143	4.169
35.0	29713	30628	4.037	4.065
40.0	25830	26611	3.923	3.953
45.0	22512	23180	3.803	3.835
50.0	19668	20242	3.675	3.709
55.0	17225	17718	3.542	3.578
60.0	15120	15546	3.404	3.441
65.0	13303	13670	3.262	3.300
70.0	11367	12410	3.083	3.190
75.0	10049	10956	2.935	3.044
80.0	8903	9692	2.787	2.896
85.0	7903	8592	2.640	2.748
90.0	7029	7632	2.494	2.601
95.0	6264	6792	2.350	2.456
100.0	5592	6056	2.210	2.313

Table 20 (Continued)

Temp °F	Min Res	Max Res	Min Vterm	Max Vterm
105.0	5002	5410	2.074	2.174
110.0	4482	4841	1.943	2.039
115.0	4022	4340	1.816	1.909
120.0	3616	3897	1.696	1.784
125.0	3259	3506	1.581	1.665
130.0	2941	3161	1.473	1.552
135.0	2658	2854	1.371	1.446
140.0	2406	2581	1.274	1.345
145.0	2181	2337	1.184	1.250
150.0	1980	2120	1.099	1.161

Table 21
Saturated Evap. Refrigerant Temp.

A4 Analog Input

Type U Thermistor Temperature Versus Resistance and Terminal Voltage Table for a pullup resistor of 38300 Ohms.

Used to sense temperatures at the following point:
1. Saturated Evap. Refrigerant Temp. CVHE/F/G

Table 21

Temp °F	Min Res	Max Res	Min Vterm	Max Vterm
10.0	62706	64832	3.084	3.129
11.0	60788	62843	3.047	3.093
12.0	58935	60921	3.011	3.057
13.0	57144	59063	2.974	3.020
14.0	55412	57268	2.937	2.984
15.0	53738	55532	2.900	2.947
16.0	52119	53854	2.863	2.910
17.0	50554	52231	2.826	2.873
18.0	49040	50663	2.789	2.836
19.0	47577	49145	2.752	2.799
20.0	46161	47678	2.715	2.762
21.0	44791	46259	2.678	2.725
22.0	43466	44886	2.641	2.688
23.0	42183	43558	2.604	2.651
24.0	40943	42273	2.567	2.614
25.0	39742	41029	2.530	2.577
26.0	38580	39826	2.493	2.540
27.0	37455	38661	2.457	2.503
28.0	36367	37534	2.420	2.467
29.0	35312	36442	2.384	2.430
30.0	34292	35386	2.347	2.394
31.0	33304	34363	2.311	2.357
32.0	32358	33365	2.276	2.321
33.0	31448	32423	2.240	2.286
34.0	30566	31511	2.206	2.250
35.0	29713	30628	2.171	2.216
36.0	28886	29773	2.137	2.181
37.0	28086	28944	2.102	2.146

Table 21 (Continued)

Temp °F	Min Res	Max Res	Min Vterm	Max Vterm
38.0	27310	28142	2.069	2.112
39.0	26559	27364	2.035	2.078
40.0	25830	26611	2.002	2.045
41.0	25125	25881	1.969	2.012
42.0	24441	25174	1.936	1.979
43.0	23778	24489	1.904	1.946
44.0	23135	23824	1.872	1.913
45.0	22512	23180	1.840	1.881
46.0	21908	22556	1.809	1.850
47.0	21322	21950	1.778	1.818
48.0	20754	21363	1.747	1.787
49.0	20203	20794	1.717	1.756
50.0	19668	20242	1.687	1.726
51.0	19150	19706	1.657	1.696
52.0	18647	19186	1.628	1.666
53.0	18158	18682	1.599	1.637
54.0	17685	18193	1.570	1.608
55.0	17225	17718	1.542	1.579
56.0	16779	17257	1.515	1.551
57.0	16346	16810	1.487	1.523
58.0	15925	16376	1.460	1.496
59.0	15517	15955	1.434	1.469
60.0	15120	15546	1.407	1.442
65.0	13303	13670	1.282	1.314
70.0	11367	12410	1.140	1.222
75.0	10049	10956	1.036	1.111
80.0	8903	9692	0.940	1.009
85.0	7903	8592	0.853	0.915
90.0	7029	7632	0.773	0.830
95.0	6264	6792	0.701	0.753
100.0	5592	6056	0.635	0.682
105.0	5002	5410	0.576	0.619
110.0	4482	4841	0.523	0.561
115.0	4022	4340	0.474	0.509
120.0	3616	3897	0.430	0.462

Table 22
Compressor Motor Winding Temp.

A6 Analog Input

Motor Winding RTD Temperature Versus Resistance and Terminal Voltage Table for a pullup resistor of 1000 Ohms.

Used to sense temperatures at the following point:

1. Compressor Motor Winding Temp. #1- CVHE/F/G

2. Compressor Motor Winding Temp. #2 CVHE/F/G

Table 22

Temp °F	Nom. Resistance	Nom. Vterm
50.0	70.4616	0.3322
55.0	71.3567	0.3361
60.0	72.2589	0.3400
65.0	73.1679	0.3439
70.0	74.0839	0.3479
75.0	75.0067	0.3519
80.0	75.9363	0.3559
85.0	76.8727	0.3600
90.0	77.8158	0.3640
95.0	78.7656	0.3681
100.0	79.7219	0.3722
105.0	80.6848	0.3763
110.0	81.6542	0.3805
115.0	82.6301	0.3846
120.0	83.6124	0.3888
125.0	84.6011	0.3930
130.0	85.5960	0.3973
135.0	86.5972	0.4015
140.0	87.6047	0.4058
145.0	88.6183	0.4100
150.0	89.6380	0.4143
155.0	90.6638	0.4187
160.0	91.6955	0.4230
165.0	92.7333	0.4273
170.0	93.7770	0.4317
175.0	94.8265	0.4361

Table 22 (Continued)

Temp °F	Nom. Resistance	Nom. Vterm
180.0	95.8818	0.4405
185.0	96.9430	0.4449
190.0	98.0098	0.4493
195.0	99.0823	0.4538
200.0	100.1604	0.4582
205.0	101.2441	0.4627
210.0	102.3333	0.4672
215.0	103.4280	0.4717
220.0	104.5281	0.4762
225.0	105.6336	0.4807
230.0	106.7444	0.4852
235.0	107.8604	0.4898
240.0	108.9817	0.4944
245.0	110.1082	0.4989
250.0	111.2398	0.5035
255.0	112.3765	0.5081
260.0	113.5182	0.5127
265.0	114.6648	0.5173
270.0	115.8164	0.5220

Information on the Oil Pressure Sensor Calibration Diagnostic

UCP2 uses two pressure sensors (one in the sump, one in the discharge) to detect oil flow. When the oil pump has been off for at least 5 minutes, the sump and discharge pressures are compared. If the absolute difference between the sensors is less that 3 psid, the difference is zeroed. If the absolute difference is greater than 3 psid, a sensor calibration diagnostic is called out.

Changes made to -11 Circuit Software (X-13650451-09 hardware) to improve Prevac performance:

The 3 psid calibration check was modified to require 90 consecutive seconds of greater than 3 psid before a diagnostic is issued.

During Prestart, the calibration check is stopped when the evaporator flow is first sensed. Previously the calibration calculation and diagnostic check were terminated when the oil pump turned on. The change was implemented to avoid nuisance pressure fluctuations caused by the start of evaporator water flow and the guide vanes bpi search.

Suspend calling out the oil pressure sensor calibration diagnostic until evaporator water has been flowing for a minimum of 5 minutes.

Transducer Checkout Procedure

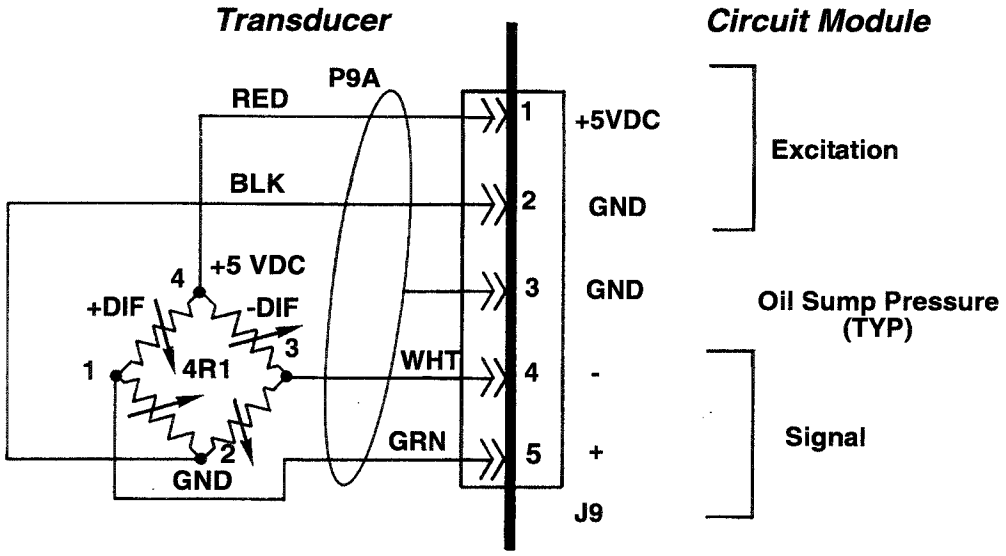

Quick Test Procedure For Mediamate Water Pressure Transducer

1. Set regulated power supply to 5 VDC. Connect 5 VDC to Pins 2 and 4 on the Transducer.
2. Check zero balance at ambient pressure by attaching Transducer lead wires of a Digital Volt Meter to Pin 1 and Pin 3 of the Transducer.
   - ~ Pin 4 Excitation (Supply) > Connect 5 VDC Power Supply
   - ~ Pin 2: Excitation (Supply)
   - ~ Pin 1: Signal Connect Volt Meter
   - ~ Pin 3: Signal

(A cable assembly with a mating Hirschmann connector could be made up and used for all tests.) Allow transducer to stabilize under power (approximately 15 - 30 seconds).

Readings:

1 Transducer used for Condenser Pressure, Oil Discharge Pressure and Oil Sump. Trane Part Number TDR0272. A good Transducer reading is: 15 mV ± 1mV

2 Evaporator and Condenser Water Flow Transducer and Part Number TDR0274 A good Transducer reading is: 0 mV ± 1 mV.

3. Insert a Q-Tip or small wooden dowel into the pressure port and gently apply force to the diaphragm and watch the DVM for a corresponding change in output.

Starter Contactor Sequence

Timing requirements to operate the "Stop," "Start," "Short," "Transition," and "Run" contact closure outputs are shown below. Prior to closing the "Short" contact, the transition complete input is verified to be open, otherwise a MMR diagnostic is generated.

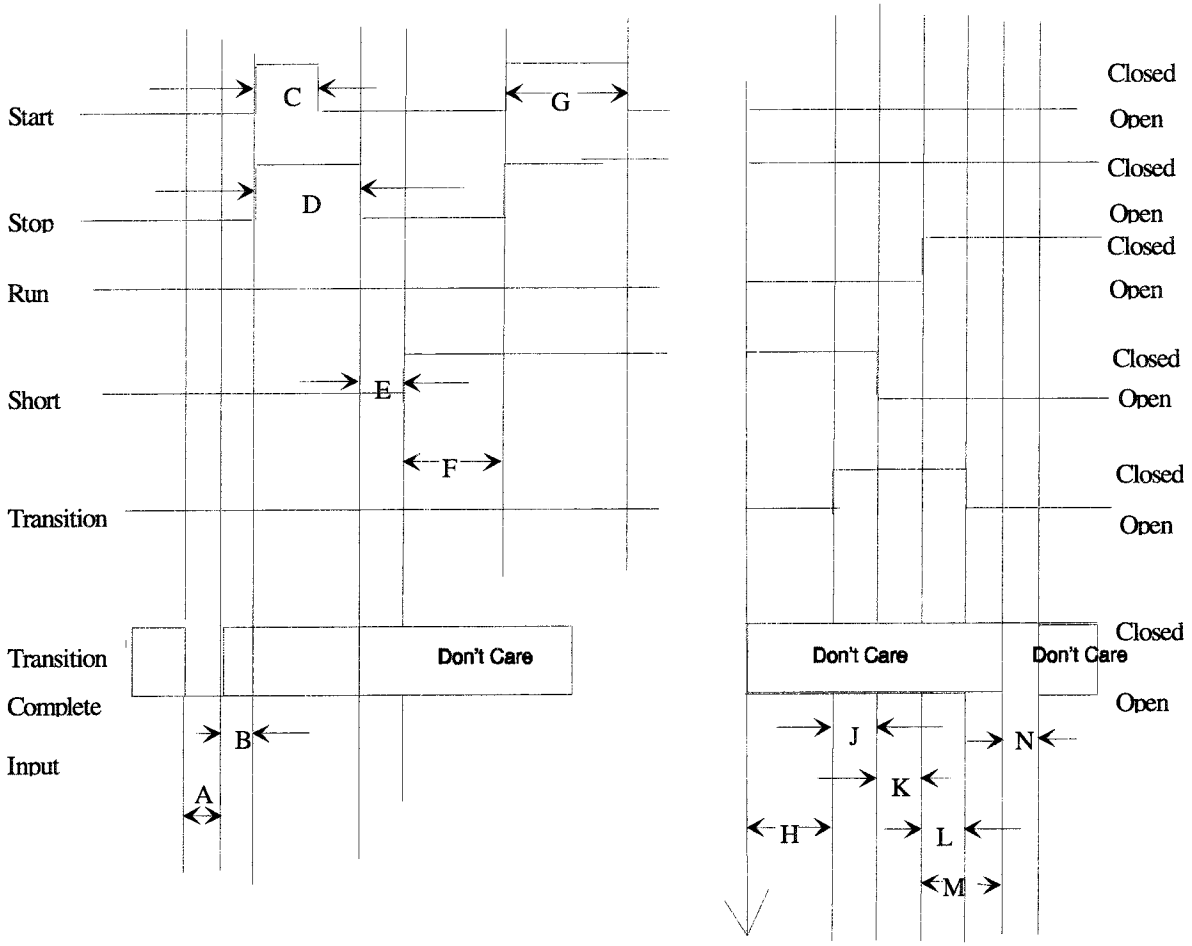

Maximum Phase Current
< or = to 85 % RLA

Key:

Interval	Units	Actual
A. (Test for transition complete input open)		160 to 240 msec
B. (Just delay time)		20 msec
C. Close 1M (2K1) Contactor and test for no current.) (Starter integrity test)		500 msec
D.		1 sec
E. (Open1M (2K1)		200 msec
F. (Close Shorting Contactor (2K3) and test for no current, then wait for Start command) (Starter integrity test)		1.0 sec (Min.)
G. (Close 1M (2K1)	sec	2sec
H. (Wait 1.5 sec after phase currents drop to 85%)	sec	1.5 sec
J. (Close 2K4 Transition Contactor)	msec	100 msec
K. (Open S (Shorting) Contactor	msec	260 msec
L. (Close 2M (2K2) Contactor)		140 msec
M. (Wait to look for Transition complete) N. (Filtering time on Transition complete input)	msec	2.32 to 2.38sec
N. (Filtering time on Transition complete input)	msec	160 to 240 sec

Note: The transition complete contact closure is expected to be an auxiliary contact to the "Run Contactor' (2K2).

Starter Module CT Voltage and Currents

There are two configurations of CTs used. One is the single stage, the other is the dual stage. A different transfer function exists depending on whether a single or dual stage configuration is used. The two configurations appear the same to the UCP2 by normalizing each. Thus a different equation is used to take the actual line current and convert it to a common 'Normalized Line Current' that may be used in Table 23 . Note that the 'Terminal Volts' is the AC voltage seen at the current input terminal pairs of the Starter module. These pairs are J5-1,2, J5-3,4 and J5-5,6.

For a single stage CT:

$$\text{Normalized Line Current (\%)} = \frac{\text{Actual Line Current(Amps)*100\%*Primary Turns CT-Rated}}{\text{Primary Current (Amps)}}$$

For a two stage CT:

$$\text{Normalized Line Current (\%)} = \frac{\text{Actual Line Current(Amps)*138.89\%*Primary Turns Line CT}}{\text{Rated Primary Current (Amps)}}$$

Table 23-Current Input Transfer Function

Normalized Line Current	Terminal Input Current (mA RMS)	Terminal Volts (V RMS) (± 5%)	Normalized Line Current%	Terminal Input Current (mA RMS)	Terminal Volts (V RMS) (± 5%)
0	0	0	115	115	4.23
5	5	1.19	120	120	4.36
10	10	1.37	125	125	4.49
15	15	1.53	130	130	4.62
20	20	1.67	135	135	4.75
25	25	1.81	140	140	4.88
30	30	1.95	145	145	5.02
35	35	2.09	150	150	5.15
40	40	2.23	160	160	5.41
45	45	2.36	170	170	5.67
50	50	2.50	180	180	5.94
55	55	2.63	190	190	6.20
60	60	2.77	200	200	6.46
65	65	2.90	210	210	6.72
70	70	3.03	220	220	6.99
75	75	3.17	230	230	7.25
80	80	3.30	240	240	7.51
85	85	3.43	250	250	7.77
90	90	3.57	260	260	8.03
95	95	3.70	270	270	8.29
100	100	3.83	280	280	8.56
105	105	3.96	290	290	8.82
110	110	4.10		300	9.08

The Current Transformers should conform to the following resistance tables:

For Single Stage CTs:

Part Number	CT Size	Winding Resistance (±10%)
X-13580253-01	100 A	23 Ω
X-13580253-02	150 A	35 Ω
X-13580253-03	200 A	46 Ω
X-13580253-04	275 A	67 Ω
X-13580253-05	400 A	68 Ω
X-13580253-06	500 A	84 Ω
X-13580253-07	700 A	128 Ω
X-13580253-08	1000 A	235 Ω
X-13580253-09	50 A	12 Ω
X-13580253-10	75 A	17 Ω

Two-Stage CTs:

Two-stage CTs are used on systems that have primary voltages in excess of 600 VAC or line currents higher than 936 amps. The first-stage CT part numbers are in the X-13580047 and X-13580048 families. The second stage is a custom current transformer (X-13580266-01) which has a transformation ratio of 3.6A:0.1A. The secondary of this transformer is then applied to the Starter module.

Trane Part Number	Resistance in Ohms		
X-13580266-01	Primary: 0.020 red and brown leads	Secondary: 5.5 black and white leads	
X-13580047-01	X1 to X4 0.468	X1 to X3 0.374	X1 to X2 0.312
X-13580047-02	X1 to X4 0.697	X1 to X3 0.565	X1 to X2 0.502
X-13580048-01	X1 to X4 0.031	X1 to X3 0.028	X1 to X2 0.023
X-13580048-02	X1 to X4 0.076	X1 to X3 0.065	X1 to X2 0.054
X-13580048-03	X1 to X4 0.104	X1 to X3 0.086	X1 to X2 0.069
X-13580048-04	X1 to X4 0.170	X1 to X3 0.136	X1 to X2 0.119
X-13580048-05	X1 to X3 0.255	X1 to X2 0.204	N/A
X-13580271-01		0.026	
X-13580272-01		0.031	
X-13580272-02		0.044	

Troubleshooting The Percent Condenser Output:

1 While the unit is running, hook up a DC Volt meter between Circuit module terminals J7-1 and J7-2

2 Select '% cond' for the Rfgt Pressure Output Option in the Field Startup menu.

3 View the High Pressure cutout setting in the machine configuration menu.

4 View the condenser refrigerant pressure in the refrigerant report.

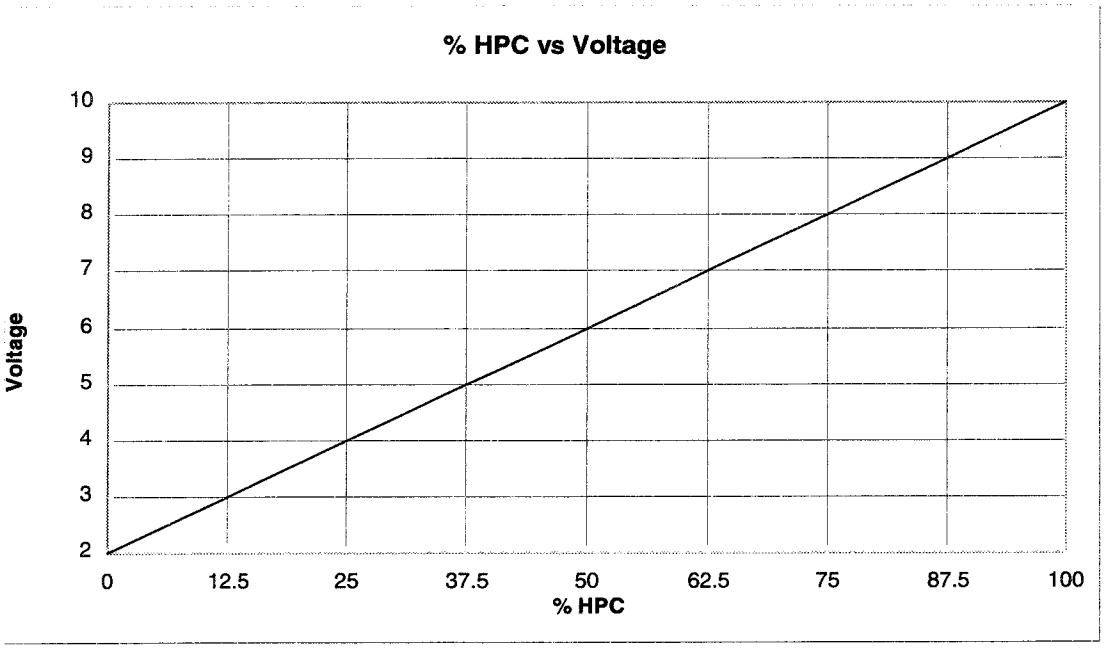

5 The voltage reading on the voltmeter should correspond to the following graph within 5 percent.

Note: *The zero point on the graph corresponds to 0 PSIA.*

The transfer function is 2 to 10 VDC corresponding to 0 Psia to the HPC setting (psig) plus the local atmospheric pressure setting or, said another way, 0 Psia to HPC in psia. The Percent Condenser Pressure indication output is based on the Condenser Refrigerant Pressure sensor if the Condenser Pressure Option is selected as 'Installed' at the CLD. The Percent Condenser Pressure indication output is based on the Saturated Condenser Refrigerant Temperature sensor if the Condenser Pressure Option is selected as ' Not Installed' at the CLD.

From UCP2 Initial Release (July 93) to 10/21/96 Software Release:

When a Temperature Sensor Only is Used and A Temperature to Pressure Conversion is Made: If the Condenser Saturated Temperature Sensor goes out of range due to an open or short, a pressure sensor diagnostic will be called and the output will also go to the respective out of range value. That is, for an out of range low on the sensor, the output will be limited to 2.0 VDC. For an out of range high on the sensor, the output will be limited to 10.0 VDC.

When a Condenser Pressure Sensor is Used (Optional): If the Condenser Pressure sensor goes out of range, like due to an open or short, a pressure sensor diagnostic will be called

and the output will go to end of range low. That is, for an out of range low on the sensor, the output will be limited to 2.0 VDC. For an out of range high on the sensor, the output will be limited to 2.0 VDC.

As of the 10/21/96 Software Release Including Fastpak and UCP2 Enhancements:

When a Temperature Sensor Only is Used and A Temperature to Pressure Conversion is Made, or When a Condenser Pressure Sensor is Used (Optional): If the Temperature Sensor (or Condenser Pressure sensor) goes out of range due to an open or short, a Temperature Sensor (or Pressure Sensor) diagnostic will be called and the output will go to end of range low. That is, for an out of range low on the sensor, the output will be limited to 2.0 VDC. For an out of range high on the sensor, the output will be limited to 2.0 VDC.

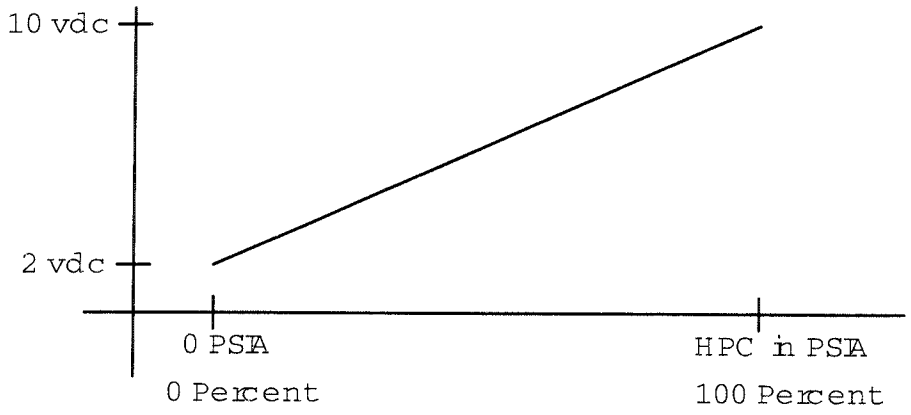

Refrigerant Differential Pressure Indication

The transfer function is 2 to 10 VDC corresponding to the menu entered "Min Delta Pressure Calibration" setting to the menu entered "Max Delta Pressure Calibration" setting. The Min Delta Pressure Calibration setting has a range of 0-400 psid (0-2758 kPa) in increments of 1 psid (1 kPa). The Max Delta Pressure Calibration setting has a range of 1-400 psid (7-2758 kPa) in increments of 1 psid (1 kPa). The condenser refrigerant pressure is based on the Condenser Refrigerant Pressure sensor if the Condenser Pressure Option is selected as 'Installed' at the CLD. The condenser refrigerant pressure is based on the Saturated Condenser Refrigerant Temperature sensor if the Condenser Pressure Option is selected as 'Not Installed' at the CLD. The evaporator refrigerant pressure is based on the Saturated Evaporator Refrigerant Temperature Sensor.

The Percent Condenser Pressure/Refrigerant Differential Pressure Indication Output is located on the Circuit module at J7-1,2

If the saturated condenser temperature is used to determine condenser pressure, it takes about 11.5 seconds for UCP2's % condenser pressure output to respond to a step change in saturated condenser temperature.

The Percent Condenser Pressure output can source a maximum of 30mA of current.

External Current Limit Setpoint

External Current Limit is an option that allows the customer to change the current limit setpoint from a remote location. The External Current Limit Setpoint is found on Options module terminals J7-11 and J7-12.

UCP2 accepts either a 2-10 VDC or 4-20 mA analog input to set the chillers external current limit setpoint. 2-10 VDC and 4-20mA each correspond to a 40 to 120% RLA range.

The following equations are what UCP2 uses:

	Voltage Signal	Current Signal
As generated from external source	VDC=.10*(%)-2.0	mA=.20(%)-4.0
As processed by UCP2	%=10.0*(VDC)+20.0	%=5.0(mA)+20.0

The following graph shows External Current Limit Setpoint with a 2-10 VDC input:

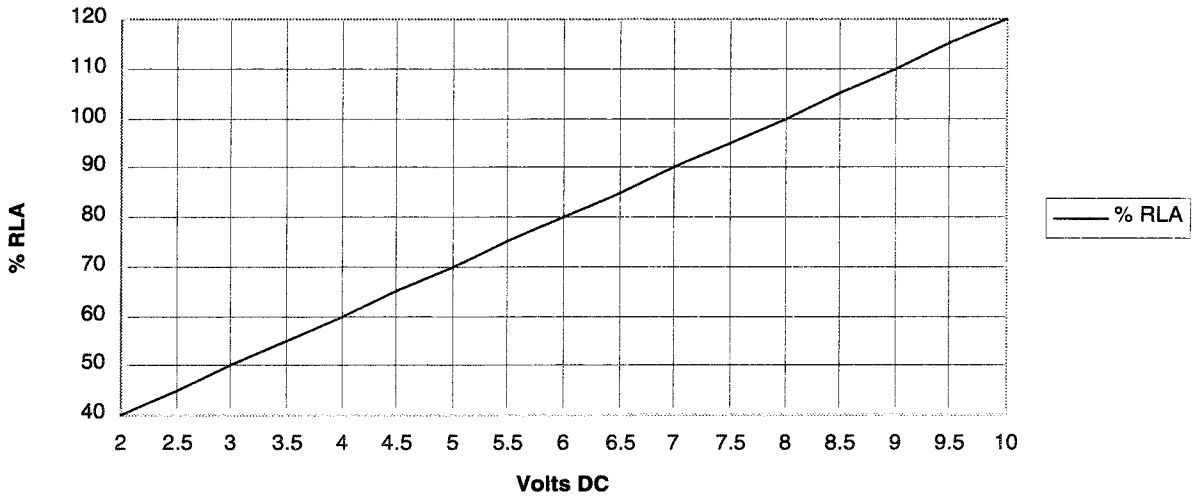

The following graph shows External Current Limit Setpoint with a 4-20 mA input:

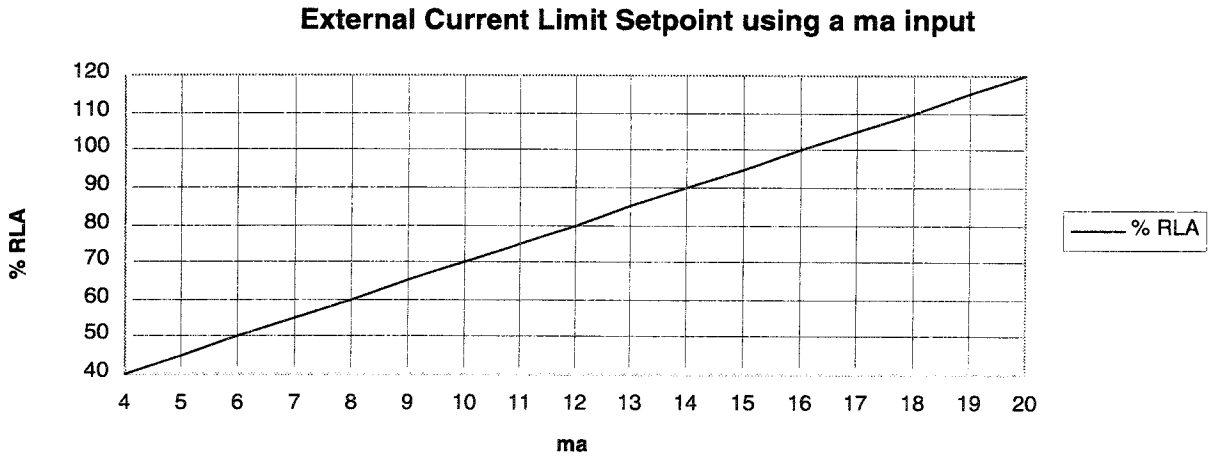

The Options module DIP switches control what type of input is used. To use a 2-10 VDC signal switch 2-1 should be in the off position. To use a 4-20 mA signal, switch 2-1 should be in the on position.

The user must also specify the type of External Setpoint Input (4-20 mA or 2-10 VDC) in the machine configuration menu.

Percent RLA Output

UCP2 provides a 2-10 VDC analog output to indicate % RLA. The transfer function shall be 2 to 10 VDC corresponding to 0 to 120% RLA with a resolution of 0.146%

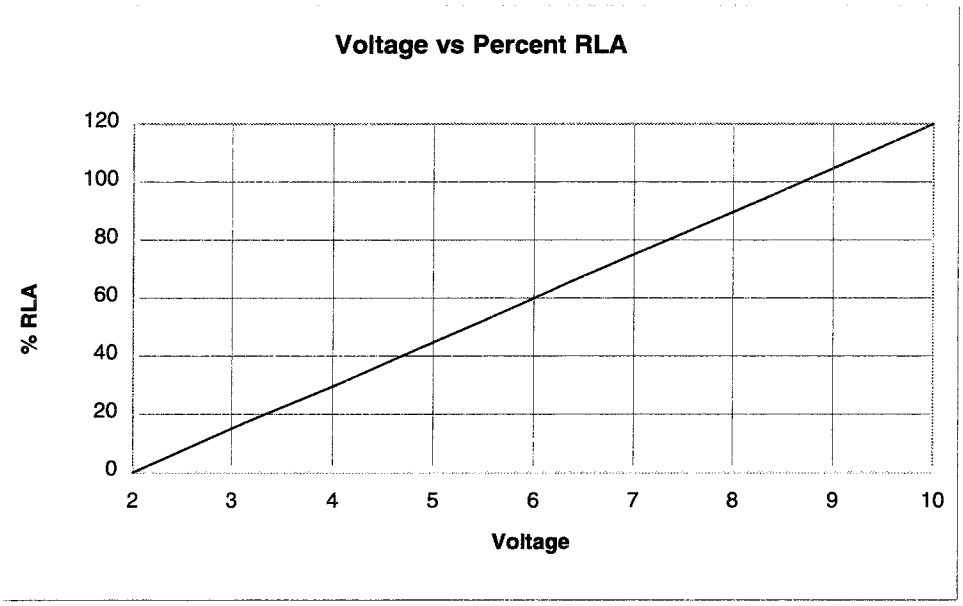

The following graph illustrates the output:

The % RLA output is found on the Options module terminals J7-3 and J7-4. The % RLA output is polarity sensitive.

J7-3 is +

J7-4 is -

The % RLA output's maximum source capability is 30mA.

Current Overload Protection:

In the run mode, a "time-to-trip" curve is looked at to determine if a diagnostic should be called. UCP2 continuously monitors the compressor current to provide running overcurrent and locked rotor protection. Overcurrent protection is based on the phase with the highest current. It will trigger a manually resettable diagnostic shutting down the compressor when the current exceeds the time-trip curve. The compressor overload is based on unit RLA.

The time-trip curve follows:

Figure 10
Overload Trip Time vs % RLA

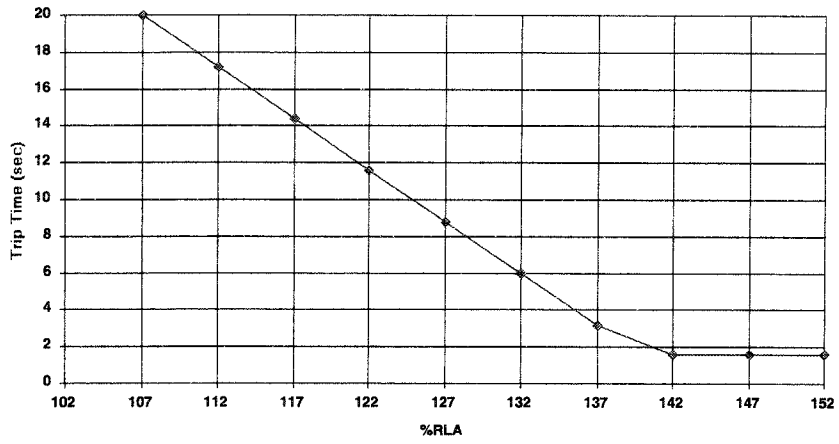

Evaporator Refrigerant Temperature Limit

The Evaporator Refrigerant Temperature Limit is a multistage control that acts to prevent chiller shutdown when the evaporator refrigerant temperature approaches the cutout setpoint by reducing chiller capacity. Chiller capacity is reduced by the following steps, providing increasingly aggressive action as the trip point is approached:

1 Limit requests for capacity increases.

2 Prohibit requests for capacity increases.

3 Initiate stepped capacity reduction.

4 Initiate maximum capacity reduction.

The purpose of this limit is to provide maximum capacity while preventing chiller shutdown due to low evaporator refrigerant temperatures.

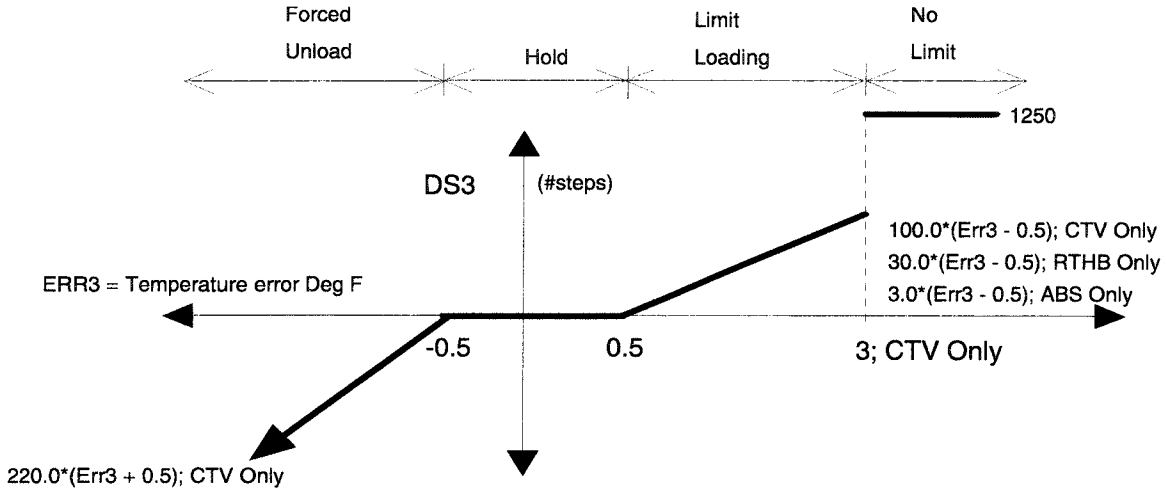

The Low Refrigerant Temperature Cutout setpoint is found in the Field Startup menu.

Design:

Lowest standard chilled water setpoint (CWS) = 37°F

Lowest standard low refrig. temp. cutout (LRTC) = 28.5°F

Lowest standard refrig. temp. limit setpoint (LRTLS) (28.5 + 2) = 30.5°F

Minimum differential between LRTC and CWS = 6.0°F

Condenser Refrigerant Pressure Limit

Prevents chiller shutdown due to High Condenser Pressure.

Explanatory Comments:

This is a multistage control that acts to prevent chiller shutdown when the condenser refrigerant pressure approaches the cutout setpoint by reducing chiller capacity. Chiller capacity is reduced via the following steps, providing increasingly aggressive action as the trip point is approached:

1 Limit requests for capacity increases.

2 Prohibit requests for capacity increases.

3 Initiate stepped capacity reduction.

4 Initiate maximum capacity reduction.

The intent of this control is to provide maximum capacity while preventing chiller shutdown due to high condenser pressures.

The condenser pressure limit function is based on the Condenser Pressure sensor if the Condenser Pressure sensor option is selected as 'Installed' on the CLD. The limit is based on the Saturated Condenser Refrigerant Temperature if the Condenser Pressure sensor is selected as 'Not Installed' on the CLD.

Setpoint (CPLS) range: (80 - 120)% HPC (Factory set to 93% HPC)

Figure 11 provides a graphical representation of the condenser pressure limit control regions for an arbitrary setpoint and the condenser pressure limit control output Ds2.

Where ERR2 = CPLS(% HPC) - actual pressure (% HPC)

Figure 11
Condenser Pressure Limit Control Regions for an Arbitrary Setpoint

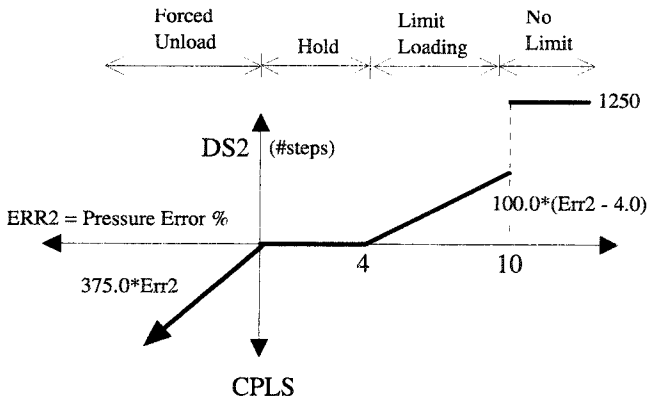

Head Relief Request

Keeps chiller on line and/or signals operator when the chiller experiences high head.

This output relay provides the customer with a "hook" into UCP2 to signal the Tower that the current tower temperature is too high. A customer may use this relay to energize multiple fans to reduce the tower water temperature.

UCP2 provides a relay output (Options module terminals J12-1 and J12-2) that can be used to operate some function in the condenser cooling system. Contacts should be compatible with a 115/240VAC control circuit.

For CTV units, the Head Relief Request relay is energized anytime the unit is in condenser limit. In addition, the Head Relief Request relay is energized anytime a surge condition is detected.

The Head Relief Request relay is accessible by Tracer such that Tracer can command it on and off if one of the above criteria is not already energizing the relay.

> *NOTE: The Head Relief Request relay is energized based only on the mode of the chiller. For example, the relay will follow either the condenser limit mode or the surge mode. In the case of condenser limit, the relay is not directly dependent on pressure; again, it is only dependent on mode.*
>
> *It is recommended that an adjustable off-delay relay be used to provide some control adjustment. It is not recommended that a tower fan be turned on and off solely based on the condenser limit mode; excessive cycling may result.*

Free Cooling Relay Checkout

1 Disable Free Cooling in the Operator Settings menu.

2 Unplug the free cooling relay connectors from J-16 and J24 on the Options module.

3 Using a DVM, measure the resistance between J16-3 and J16-2. Record in the table below.

4 Measure and record the resistance between J16-3 and J16-1.

5 Measure and record the resistance between J24-3 and J24-2.

6 Measure and record the resistance between J24-3 and J24-1.

7 Enable Free Cooling in the Operator Settings menu.

8 Using a DVM, measure the resistance between J16-3 and J16-2. Record in the table below.

9 Measure and record the resistance between J16-3 and J16-1.

10 Measure and record the resistance between J24-3 and J24-2.

11 Measure and record the resistance between J24-3 and J24-1.

12 If any of the recorded resistances are out of the specified values, the free cooling relays are not functioning properly.

Terminals	Recorded Resistance	Value when Free Cooling is Disabled	Value when Free Cooling is Enabled
J16-3 to J16-2		Less than 5 Ohms	Greater Than 1M Ohm
J16-3 to J16-1		Greater Than 1M Ohm	Less than 5 Ohms
J24-3 to J24-2		Less than 5 Ohms	Greater Than 1M Ohm
J24-3 to J24-1		Greater Than 1M Ohm	Less than 5 Ohms

UCP2 provides Free Cooling control as follows:

1 The Options module shall provide the following Binary Inputs/Outputs:

- ~ Class II Binary Input: External Free Cooling Switch
- ~ Class II Binary Input: FC Actuators Closed FC valve closed limit switches are wired in series to this input.
- ~ Class I Form C Binary Output: FC Actuator Relay #1 Operates first FC valve.
- ~ Class I Form A Binary Output: FC Aux. Relay Customers choice.
- ~ Class I From C Binary Output: FC Actuator Relay #2 Operates second FC valve

2 The operator has the ability to control Free Cooling On/Off manually at the Front Panel, Automatically via a On/Off binary input (called External Free Cooling Switch) at the Options module, and from a command from Tracer. At the binary input at the Options module, an open shall command Free Cooling Off, and a Short will command Free Cooling On.

3 For display and mode purposes, the FC mode shall be displayed when the FC valves are open. That is, when the FC valve relays are energized and the FC valve limit switches open the FC mode shall be displayed. Likewise, when the FC valve relays are de-energized and the FC valve limit switches close, the FC mode shall be terminated.

4 FC cannot be entered if the chiller is in STOP; FC can only be entered from AUTO. Either setting the FP CLD to FC On or closing the Ext FC Switch binary input, or receiving a

command from Tracer will initiate the sequence to enter FC.

If the chiller is in AUTO and not running UCP2 will start the condenser water pump just as it does for powered cooling (Since the unit is in AUTO the chilled water pump should already be running. Once condenser water flow is confirmed the FC valve relays #1, #2, and the FC Aux. relay are all energized. If the FC valve closed limit switches do not open within 3 minutes a MMR diagnostic is generated. Once the FC valve closed limit switches open the unit is considered in FC.

If the chiller is in AUTO and is running powered cooling, the chiller will do a normal friendly shutdown when FC is commanded from either source. The compressor will enter RUN: UNLOAD, POST LUBE, and overdrive the IGVs closed as usual. Once the IGV's have been overdriven closed and condenser water flow has been confirmed, the three FC relays will be energized.

In FC manual vane control shall not be active.

It is not necessary to check the status of the IGVs during FC. The IGVs must be closed during FC; it is sufficient to assume that they are closed since they are overdriven closed on all compressor shutdowns and hard (powerup) resets.

Once the FC valves have opened, a FC valve closure will generate an MMR diagnostic.

If there is a diagnostic in FC, Stop FC as normal and Stop the Condenser Water Pump.

5 FC can be terminated from either the Front Panel CLD, the Ext. FC Switch input at the Options module, or the Tracer (or a diagnostic). Once commanded to Off, the Two FC relays are de-energized. If the FC valve closed limit switches do not close within 3 minutes a MMR diagnostic is generated. Once the limit switches are closed the chiller status should revert back to AUTO and powered cooling may be entered if there is a call for cooling.

6 **On all FC chillers (FC is installed),** the FC valve limit switches must be closed to both start and run powered cooling, otherwise a MMR diagnostic will be generated. The IGVs must be held closed for 3 minutes on each startup following a free cooling mode.

7 On FC units the failure of communications between the Options module and the Chiller module will cause a MMR diagnostic at the Chiller module.

Hot Gas Bypass

Customer Benefit:

Hot Gas Bypass eliminates or reduces cycling on process or other installations having load variations that occasionally include brief periods of no or very light load. Eliminating cycling shortens the time required to respond to load increases, and prevents chiller starts during periods when chiller starts are prohibited.

HGBP is also used as a way to correct applications where the chiller has been oversized.

Explanatory Comments:

Hot Gas Bypass is a chiller option that is intended to reduce the capacity of the chiller at minimum load conditions by bypassing condenser gas to the evaporator. On standard chillers, minimum load is determined by the amount of gas that leaks through the inlet guide vanes when they are fully closed. By adding HGBP a portion of this gas comes directly from the condenser, thus reducing the amount of cooling done by the chiller.

For CVHE/F/G/B Chillers:

See also High Compressor Discharge Temperature Protection.

In the Machine Configuration menu, UCP2 has an entry to indicate that hot gas bypass is installed. The installation of HGBP will enable all of the HGBP valve diagnostics, HGBP screens in the CLD, and communications diagnostics with the I/O module. The HGBP valve can be independently controlled in the Service Tests menu. Tracer is also be able to Enable/ Disable HGBP.

When HGBP is Enabled, HGBP control will check to see if the IGV position is less than or equal to the larger of either Fully Closed or the "Guide Vane Closed Travel Stop". When this condition is satisfied and the ELWT is 0.5°F below the chilled water setpoint an integral is permitted to ramp up. When the integral reaches a predetermined value, the HGBP mode is Entered.

Once the HGBP mode is entered, the output of the evaporator leaving water temperature control algorithm will be scaled for tics (versus steps) and sent to the I/O module to modulate the HGBP valve. The inlet guide vanes are given a loading pulse until the "HGBP Mode, IGV Target" is attained.

Exiting Hot Gas Bypass:

While in the HGBP mode, the same integral that allowed HGBP to be entered is ramped if the ELWT is 0.5°F above the chilled water setpoint. This allows the HGBP mode to be terminated if the load increases. When this integral is greater than or equal to some preset value, HGBP control is terminated, and LWT control is directed to the inlet guide vanes.

If the user Enables the "Maximum HGBP Time" timer, the algorithm shuts the CenTraVac down after the timer has expired. The "Maximum HGBP Time" will be user adjustable. When the timer is Enabled, the mode display is modified to show the Hot Gas Bypass time remaining.

During HGBP, the normal differential to stop is obeyed. If the differential to stop or the "Maximum HGBP Time" timer requires the Centravac to shutdown, the HGBP valve will be held while the inlet guide vanes are driven closed. When the inlet guide vanes are fully closed, the Centravac will shutdown.

Hot Gas Bypass Valve Operation:

The HGBP valve is constantly driven closed when neither in the HGBP mode nor under manual HGBP valve control. During this time, the I/O module will be checking for a valve closed indication from the HGBP valve switch input and will issue a valve diagnostic if the valve is not found to be closed. Upon seeing a transition from either HGBP mode or manual HGBP valve control, the I/O module will allow 3 minutes to expire before calling out a Hot Gas Bypass Valve closure overdue diagnostic.

Manual Hot Gas Bypass Valve Control:

The HGBP valve is capable of manual control while the unit is running and during the stop mode. The manual HGBP control is based on a load, hold, or unload signal from a user specified duration setpoint every 5 seconds.

Design:

The HGBP feature is designed as specified above. The following is added for further clarity.

Hot gas bypass (HGBP) is a control option designed to avoid chiller cycling during low load conditions while still maintaining the chilled water temperature set point. This is accomplished by artificially increasing the load on the compressor. The compressor load is artificially increased using the hot gas bypass valve to divert refrigerant gas from the condenser back into the suction side of the compressor. The hot gas bypass valve is modulated by appropriately scaling the output of the ELWT control algorithm.

HGBP Control Actuator Characteristics: Single phase induction motor moving a butterfly valve

HGBP Control Algorithm Inputs: ELWT control error, IGV target position

HGBP Control Algorithm Output: number of tics to open/close the hot gas bypass valve

HGBP Control Algorithm Sample Rate: Sample Rate: = 5 sec

Install and Enable

To get the HGBP control option to function it must first be installed. To install the HGBP control option enter the **Machine Configuration Group**. In this group make sure to

1 Install Hot Gas Bypass Control.

Installing HGBP control sets up the display features associated with HGBP. However, for the control algorithm to be operational it must be enabled. To enable the HGBP control algorithm enter the **Field Start-up Group**.

2 Enable Hot Gas Bypass Control.

In addition, this group also has three user adjustable setpoints associated with the HGBP control option. The three setpoints are:

1) HGBP mode, IGV Target:%

In the HGBP mode, the HGBP valve modulates capacity while the inlet guide vanes move to a target position set by the user. The inlet guide vanes move to the target position by a maximum of 40 steps every sample period.

2) Guide Vane Closed Travel Stop:%

In order for the hot gas bypass staging integral to begin integrating, the inlet guide vane step position must be below a minimum step position known as the guide vane closed travel stop. In addition, the ELWT must be 0.5°F below the chilled water setpoint.

3) Maximum HGBP Time:

When the maximum HGBP time is enabled the maximum HGBP timer is used to determine how long the chiller is allowed to operate in the hot gas bypass mode.

Hot Gas Bypass Control Algorithm

The HGBP staging integral begins to execute once the ELWT falls below the CWS by 0.5°F, and the inlet guide vanes are below a user specified minimum position (usually zero). Once the HGBP staging integral has reached a preset number, capacity control transitions to the HGBP valve. The HGBP value is modulated by converting ELWT step commands into time based (tic) commands. Once transition occurs, the inlet guide vanes are loaded by 40 steps every sample period until they reach a user specified target value. To exit the HGBP modulating mode, the evaporator leaving water temperature must begin to rise above the CWS. If the ELWT exceeds the CWS by 0.5°F, the staging integral begins to integrate. Once the staging integral reaches a preset number, capacity control transitions back to the inlet guide vanes.

Ice Machine Control

UCP2 will accept a contact closure input to initiate Ice building. When in the ice making mode, the compressor will be fully loaded and will continue to operate until the ice contacts open or the return water temperature reaches an Adjustable Termination Setpoint. If terminated on return setpoint, UCP2 will not allow the chiller to restart until the ice making contact is opened.

UCP2 will provide an output contact closure that can be used as a signal to the system that ice making is in operation. This relay will be closed when ice making is in progress and open when ice making has been terminated by either UCP2 or the remote interlock. It is used to signal the system changes required to convert to and from ice making.

Ice mode operation will be indicated by an "Ice Building" operation mode that can be displayed at the unit or communicated over the communications link.

The UCM shall provide a Service level Enable/Disable menu entry for the Ice Building feature when the Ice Building Option is installed.

The UCM shall accept either an isolated contact closure (call it External Ice) or a Remote Communicated input (Tracer) to initiate an Ice building mode where the unit runs fully loaded at all times. Ice building shall be terminated either by opening the contact or based on entering evaporator water temperature. The UCM shall not permit the Ice Building mode to be entered again until the unit is switched to the Non-Ice Building mode and back into the Ice Building mode.

It is not acceptable to reset the CWS low to achieve a fully loaded compressor; the UCM shall force the compressor to full load.

When entering ICE-BUILDING the compressor is loaded at its maximum rate and when leaving ICE-BUILDING the compressor is unloaded at its maximum rate. For CTV only: while loading and unloading the compressor all surge detection is ignored.

> *Implementation Note: Surge detection is not explicitly prevented while loading and unloading the chiller. While the above requirement is valid it is not expected that a surge would be detectable during the relatively short load and unload intervals.*

In Ice building, softloading and current limit setpoints less than the maximum are all ignored. For example, if the Front Panel Current Limit setpoint is set to 80%, in Ice Building the Active Current Limit setpoint is automatically reset to its maximum value.

In the Ice Building mode if the unit gets down to the freezestat setting (water or refrigerant) the unit will shutdown on a diagnostic, just like in normal operation.

Condenser, current and evaporator limits are active during Ice Building.

If any other limits are placed on IGV or Slide Valve stroke during Normal Cooling, the UCM will ignore these limits during ICE-BUILDING; that is, the IGVs or Slide Valve will be fully loaded/ stroked/extended during ICE BUILDING.

ICE-BUILDING and ICE-BUILDING COMPLETE are modes displayed by the UCM at the front panel and communicated to the Tracer.

If the UCM has the capacity for some other feature to reset the cooling tower temperature, the cooling tower temperature is reset to its minimum value or the cooling tower commanded to run at full capacity.

ICE-BUILDING may be terminated by one of three means:

1 Opening the External Ice Contacts/Remote communicated input (Tracer), or satisfying an evaporator entering water temperature setpoint, or surging for 15 minutes at full open IGV

or

2 In general, if there is an MAR diagnostic during either ICE-BUILDING or ICE BUILDING COMPLETE and the diagnostic clears the chiller shall return to either ICE-BUILDING or ICE-BUILDING COMPLETE, respectively

or

3 If the ice building complete mode is reached and the ice building complete mode is exited due to a diagnostic or a system stop command, removing the diagnostic or returning the system to the auto mode will cause the system to return to the ice building complete mode. The system will leave ice building complete when the ice building command is released in any mode.

During ICE-BUILDING, any other action specified for Normal Cooling due to surge detection is overridden. If surge is detected continuously for 15 minutes while in ICE-BUILDING and while the IGVs are fully open, shutdown the chiller on a latching MAR diagnostic; the chiller is latched out of ICE-BUILDING until the Ice-Building command is cycled; Normal Cooling is permitted. (Notice in both ICE-BUILDING and NORMAL COOLING a surge diagnostic is a MMR diagnostic., however, if there was a surge diagnostic. when in ICE-BUILDING the diagnostic is automatically cleared when the ice-building command is withdrawn.)

The UCM shall accept a non-volatile "Front Panel Ice Termination Setpoint" adjustable from 20 to 31°F (-6.7 to -0.5°C) in at least 1°F (0.1°C) increments. When the evaporator entering water temperature drops below the ice termination setpoint the chiller will enter it's shutdown sequence.

If ICE-BUILDING is terminated by either the External Ice contacts opening or the Remote Communicated input (Tracer) while the compressor is running, as noted above, the compressor will be unloaded at its maximum rate, however, the chiller will continue to operate at minimum capacity for an adjustable 0 to 10 minutes; call this the "Ice-to-Normal Cooling Timer" (default value to be 5 minutes). If during the Ice-to-Normal Cooling Time the LWT becomes greater than the Normal Cooling Differential To Stop shutdown temperature, the chiller will be returned to Normal LWT control and shutdown on the Normal Differential to Stop criteria. If the Normal Cooling Differential to Stop shutdown temperature is not reached during the Ice-to-Normal Cooling Time, the chiller enters its shutdown sequence; chiller restart will then be based on the Normal Cooling Differential to Start criteria.

Ice Building will only be permitted when both the unit is in Auto and the last mode of operation has been normal (non-ice building) AUTO (either running or not running). See the following table:

Unit Status 0 = Stop 1 = Auto	Ext Ice Input	Entr Evap Temp Compared to Ice-ter Setpt	Chiller Mode
0	Ice (Short)	>	Stop

1	Normal (0pen)	>	Auto
1	Ice (Short)	>	Ice-building, Run Full Load.
1	Ice (Short)	<	Ice-completed, Ice-building Terminated Because the Ice Completion Setpt was Met.
1	Ice (Short)	>	Ice Completed, Cannot Restart Ice-building Because the Ext Ice Input was not Cycled Out and Back Into "Ice Building".
1	Normal (Open)	>	Auto, Normal Chiller Operation Based and Chilled Water Setpoint.
1	Ice (Short)	>	Ice-building.

Pumps:

Condenser pump control shall be as in Normal Cooling.

Chilled Water pump control shall be as in Normal Cooling.

Upon termination of Ice Building based on evaporator entering water temperature, either the UCM or Unit must provide a contact closure that can be used to turn off the pump system. This requirement shall be satisfied as follows:

During the ICE-BUILDING COMPLETE mode the CHWP relay shall be de-energized immediately upon entering "Ice Building Complete" (following the "post lubrication" mode) as if the chiller had been manually put to STOP. Assuming the chiller is still in the AUTO mode when the External Ice Contacts are opened, the CHWP relay shall be re-energized.

Ice Building Relay:

The ice building relay will be held on as long as there is a valid ice building command and the Ice building complete mode has never occurred. If ice building is interrupted by a diagnostic or some type of stop command, the relay will be held on. This is because clearing of the diagnostic or re-entering the auto condition will allow ice building to resume. Said another way, the ice building relay is on whenever there is a Ice Building command (External or Remote Communicated (Tracer)) but we are not in the Ice Building Complete mode.

Recommended Wire Lengths for PTs

The maximum recommended wire length for PTs in a single PT system:

Wire Gauge	Max lead length(ft)	Max lead length (m)
8	5339	1627
9	4234	1291
10	3357	1023
11	2663	811
12	2112	643
13	1674	510
14	1328	404
15	1053	321
16	835	254
17	662	201
18	525	160
19	416	126
20	330	100
21	262	79
22	207	63

The maximum recommended wire length for PT leads in a dual PT system are:

Wire Gauge	Max Wire Length Primary (ft)	Max Wire Length Primary (m)	Max Wire Length Secondary (ft)	Max Wire Length Secondary (m)
8	3061	933	711	217
9	2428	740	564	172
10	1924	586	447	136
11	1526	465	355	108
12	1211	369	281	85
13	960	292	223	68
14	761	232	177	53
15	603	184	140	42
16	478	145	111	33
17	379	115	88	26
18	301	91	70	21
19	238	72	55	16
20	189	57	44	13
21	150	45	34	10
22	119	36	27	8

Note: These wire lengths are for copper conductors only

Note: The above lengths are maximum round trip wire lengths. The maximum distance the PT can be located is 1/2 of the listed value.

Checking for an Open, Burnt, or Shorted CentraVac Motor Windings

1 Remove power from the machine and remove the three main fuses.

2 Disconnect the top three leads from the motor lugs.

3 Verify the terminal to terminal and terminal to ground resistances are correct by using the tables below.

For Low to Medium Voltage Machines (Less than 4160 V):

Meas. Point	Chassis GND	T1	T2	T3	T4	T5	T6
Chassis GND	N/A	V x 1,000*	V x 1,000*	V x 1,000*	V x 1,000*	V x 1,000*	V x 1,000*
T1	V x 1,000*	N/A	∞	∞	< 1 ohm	∞	∞
T2	V x 1,000*	∞	N/A	∞	∞	< 1 ohm	∞
T3	V x 1,000*	∞	∞	N/A	∞	∞	< 1 ohm
T4	V x 1,000*	< 1 ohm	∞	∞	N/A	∞	∞
T5	V x 1,000*	∞	< 1 ohm	∞	∞	N/A	∞
T6	V x 1,000*	∞	∞	< 1 ohm	∞	∞	N/A

where:

∞ = Infinity

V = The rated motor voltage.

* The rated motor voltage multiplied by 1,000 is the minimum resistance that you should measure here. The actual resistance that you measure will probably be higher.

For High Voltage Machines (4160 V and higher): Consult Trane Technical Service for this information.

Information on Tracer

Tracer is automatically installed when it does control. If it only does monitoring, it will not automatically install and, in fact, a loss of comm with Tracer will be called if a person manually installs the Tracer option. If the TCI and/or Tracer option are automatically installed by hooking them up, the CLD menus will be automatically changed to 'installed'. If loss of comm occurs with the Tracer or TCI, UCP2 will default to front panel setpoints, but the diagnostic 'Tracer Communications Lost' will be called at UCP2 and Tracer will not be de-installed. On a power up, if the Tracer option was previously installed, the TCI module will call out a 'Tracer failed to Establish Comm' if the Tracer does not take control within two minutes.

If Tracer communications are lost for 15 continuous minutes after communication have been established, then front panel setpoints are used by UCP2.

LEDS:

The diagnostic LED in the upper left hand side of the module is only active for the printer module, and should never come on for a TCI module.

The Green LED labeled RXA should be continuously flashing.

The Red LED labeled TXA should blink about once every two seconds.

The Green LED labeled RXB will blink constantly

The Red LED labeled TXB will blink once every minute for comm 3, and once every 20-60 seconds for comm 4.

Dip Switches:

For a TCI comm 3 module, the dip switches should be in the following positions:

1 - Off

2 - Off

3 - Off

For a TCI comm 4 module, the dip switches should be in the following positions:

1 - Off

2 - On

3 - Off

UCP2/Tracer Compatibility List:

Go into the Service Tests menu and display the software revision levels, or view the part numbers on the modules.

Confirm that all of UCP2 modules are equal to or greater than the revision levels listed below.

Module	Module Hardware	Software
CTV Chiller	X-13650450-02	02
Circuit	X-13650451-04	03
CTV Stepper	X-13650455-03	03
LCLD	X-13650448-02	06
TCI Com 4 Baud 9600	X-13650457-03	03
TCI Com 3 Baud 1200	X-13650460-02	02
Options	X-13650452-02	02

Purge	X-13650454-04	03
Starter	X-13650453-04	05

UCP2 Clock:

UCP2 clock will retain it's last time stored in it at power down, but will not increment while powered down. It is necessary to update the time and date if UCP2 is powered down for an extended period of time. If UCP2 has been powered down for an extended period, then a informational warning 'Check Clock' will be announced.

The Year 2000:

UCP2 is year 2000 compliant, because UCP2's valid range of dates is January 1st, 1980 to February 5th, 2116. No date problems will occur in this range, including the year 2000.

There will be no operating effect for UCP2 going to the year 2000. 90 percent of all Trane centrifugal chillers installed in 1938 were still running in 1994. However, it is unlikely that a chiller installed in 1996 will run twice that amount of time and make it until 2116. If a chiller does live until to the year 2116, the clock will roll over to January 1st, 1980. UCP2 does not use the date for any control functions. The date and time is displayed for the operators information, and as a time/ date stamp for diagnostics.

UCP2 has been tested, and transitions to the year 2000 without any problem.

Date information is not required to be entered in the initial configuration of UCP2. However, most people do like to set up the clock on initial startup.

The format of UCP2's date follows: Time, Month, Day, Year. Example: 11:59 pm Dec 31, 2116.

The years are input as 4 digits.

The valid range of dates is from January 1, 1980 to February 5, 2116.

When UCP2 reaches the end of the date range, the clock rolls over to January 1, 1980.

Date calculations are not used in the standard operation of the UCP2. UCP2 does not perform any date based feature activation/deactivation.

Diagnostics are time stamped and the time stamp is displayed in the following format: 6:31 pm Feb 12, 1997.

UCP2 does perform leap year calculations, but does not perform daylight savings time calculations.

Chilled Water Reset

The chilled water reset function can provide energy savings and/or better critical zone control and/or better indoor air quality when applied to the right system type.

The chilled water setpoint is reset based on a temperature (return chilled water, zone, outside air), or other input such as humidity or a customer supplied analog signal.

The most common use of chilled water reset is to provide constant return chilled water temperature. UCP2 makes this particular form of chilled water reset very easy to set up. One way to do this is to make it the default setting.

Constant Return Reset is a good starting point in a comfort cooling application. If you think about it, at full load you both cool (sensible) and dehumidify (latent) the air at the coil. The coil is designed to do so much sensible and latent cooling at a given entering water temperature. If you can get sufficient sensible and latent cooling at full load, it follows then that by maintaining a constant leaving water temperature off the coil (entering to the chiller) at part load you have a good chance of satisfying both your sensible and latent loads. Of course, if at part load the customer finds the air is either too wet or too dry, the Chilled Water Reset Ratio can be adjusted up or down to compensate.

Due to extremely low usage, CWR based on Zone Temperature has been eliminated from the basic UCP2.

UCP2 resets the chilled water temperature setpoint based on either return water temperature, or outdoor air temperature. Return Reset is standard, Outdoor Reset is optional.

The following are selectable:

1 One of three RESET TYPEs: no CWR, RETURN WATER TEMPERATURE RESET, OUTDOOR AIR TEMPERATURE RESET, or CONSTANT RETURN WATER TEMPERATURE RESET. The UCP2 will not permit more than one type of reset to be selected.

2 RESET RATIO Setpoints.

For outdoor air temp. reset there shall be both positive and negative reset ratios.

3 START RESET Setpoints.

4 MAXIMUM RESET Setpoints.

The maximum reset's are with respect to the chilled water setpoint.

The equations for each type of reset are:

Return

CWS' = CWS + RATIO (START RESET - (TWE - TWL))

and CWS' > or = CWS

and CWS' - CWS < or = Maximum Reset

Outdoor

CWS' = CWS + RATIO * (START RESET - TOD)

and CWS' > or = CWS

and CWS' - CWS < or = Maximum Reset

where

CWS' is the new chilled water setpoint,

CWS is the active chilled water setpoint before any reset has occurred

RESET RATIO is a user adjustable gain

START RESET is a user adjustable reference

TOD is the outdoor temperature

TWE is entering evap. water temperature

TWL is leaving evap. water temperature

MAXIMUM RESET is a user adjustable limit providing the maximum amount of reset. For all types of reset, CWS' - CWS < or = Maximum Reset.

The values for "RESET RATIO" for each of the reset types are:

Reset Type	Reset Ratio Range	Increment (English Units)	Increment (SI Units)	Factory Default Value
Return:	10 to 120%	1%	1%	50%
Outdoor	80 to -80%	1%	1%	10%

The values for "START RESET" for each of the reset types are:

Reset Type	Start Reset Range	Increment (English Units)	Increment (SI Units)	Factory Default Value
Return	4 to 30°F (2.2 to 16.7°C)	1°F	0.1°C	10°F (5.6°C)
Outdoor	50 to 130°F (10 to 54.4°C)	1°F	0.1°C	90°F (32.2°C)

The values for MAXIMUM RESET for each of the reset types are:

Reset Type	Maximum Reset Range	Increment (English Units)	Increment (SI Units)	Factory Default Value
Return	0 to 20°F (0.0 to 11.1°C)	1°F	0.1°C	5°F (2.8°C)
Outdoor	0 to 20°F (0.0 to 11.1°C)	1°F	0.1°C	5°F (2.8°C)

Both Return and Outdoor Reset do not apply to hot water control mode where UCP2 is controlling the Leaving Condenser Water Temperature.

In addition to Return and Outdoor Reset, UCP2 will provide a menu item at the Clear Language Display for the operator to select a Constant Return Reset. Constant Return Reset will reset the leaving water temperature setpoint so as to provide a constant entering water temperature. The Constant Return Reset equation is the same as the Return Reset equation except on selection of Constant Return Reset, UCP2 will automatically set RATIO, START RESET, and MAXIMUM RESET to the following.

the RATIO = 100%

the START RESET = Design Delta Temp.

the MAXIMUM RESET = Design Delta Temp.

The equation for Constant Return is then as follows:

Constant Return

CWS' = CWS + 100% (Design Delta Temp. - (TWE - TWL))

and CWS' > or = CWS

and CWS' - CWS < or = Maximum Reset

Notice that Constant Return is nothing more than a specific case of Return Reset offered for operator convenience.

When any type of CWR is enabled, UCP2 will step the CWS toward the desired CWS' (based on the above equations and setup parameters) at a rate of 1°F every 5 minutes until the Active CWS equals the desired CWS'. This applies when the chiller is running. When the chiller is not running the CWS is reset immediately (within one minute) for Return Reset and at a rate of 1°F every 5 minutes for Outdoor Reset. The chiller will start at the Differential to Start value above a fully reset CWS or CWS' for both Return and Outdoor Reset.

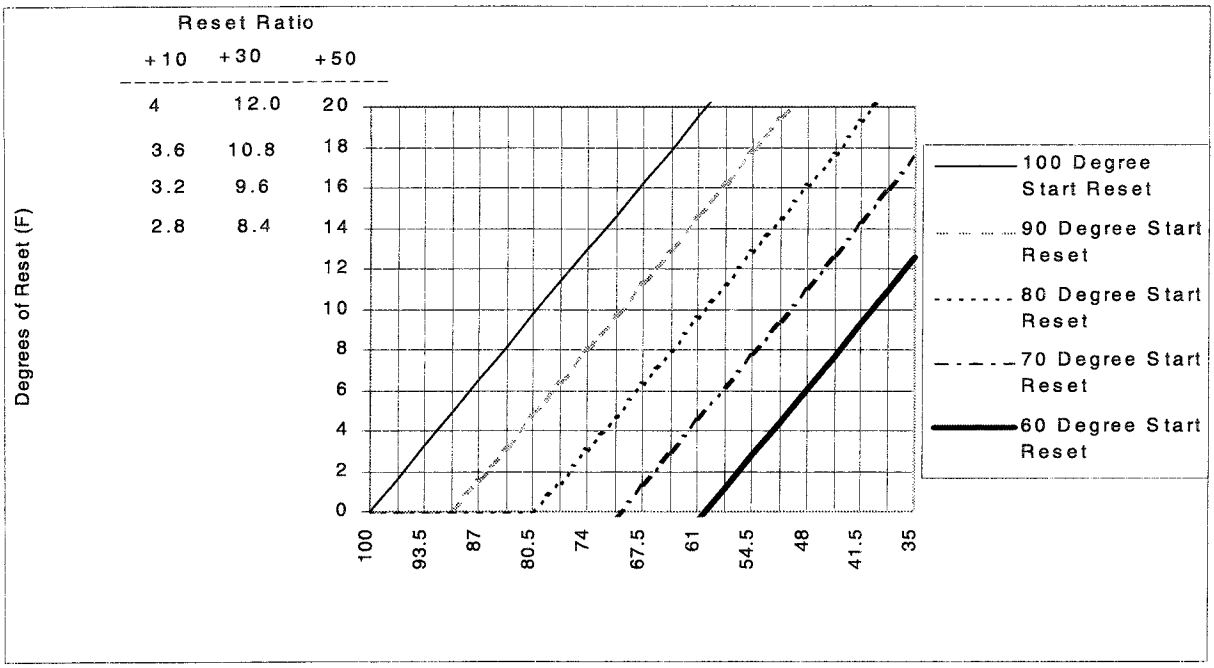

The preceding graph shows the reset function for Outdoor Air Temp:

Note: This graph assumes that Maximum Reset is set to 20 degrees.

Using the Equation for calculating CWR for Outdoor Air Temp

Equation:

Degrees of Reset = Reset Ratio* (Start Reset - TOD)

Degrees of Reset:

Degrees of Reset = Active CWS - Front Panel CWS

or

Degrees of Reset = CWS' - CWS

To obtain Active CWS from Degrees of Reset:

Active CWS = Degrees of Reset + Front Panel CWS

Reset Ratio:

The Reset Ratio on the CLD is displayed as a percentage. To use it in the above equation it must be converted to it's decimal form.

Reset Ratio percent /100 = Reset Ratio decimal

Example of converting Reset Ratio:

If the Reset Ratio displayed on the CLD is 50% then use (50/100)=.5 in the equation

TOD = Outdoor Air Temp

Start Reset = Outdoor Air Start Reset

Example of Calculating Reset for Outdoor Air Temp:

If:

Reset Ratio = 35%

Start Reset = 80

TOD = 65

Maximum Reset = 10.5

How many Degrees of Reset will there be?

Degrees of Reset = Reset Ratio* (Start Reset - TOD)

Degrees of Reset = .35*(80-65)

Degrees of Reset = 5.25

If:

Reset Ratio = -70%

Start Reset = 90

TOD = 100

Maximum Reset = 17

How many Degrees of Reset will there be?

Degrees of Reset = Reset Ratio* (Start Reset - TOD)

Degrees of Reset = -.7*(90-100)

Degrees of Reset = 7

The following graph illustrates the reset functions of the above examples:

Degrees of Reset vs Outdoor Air Temp

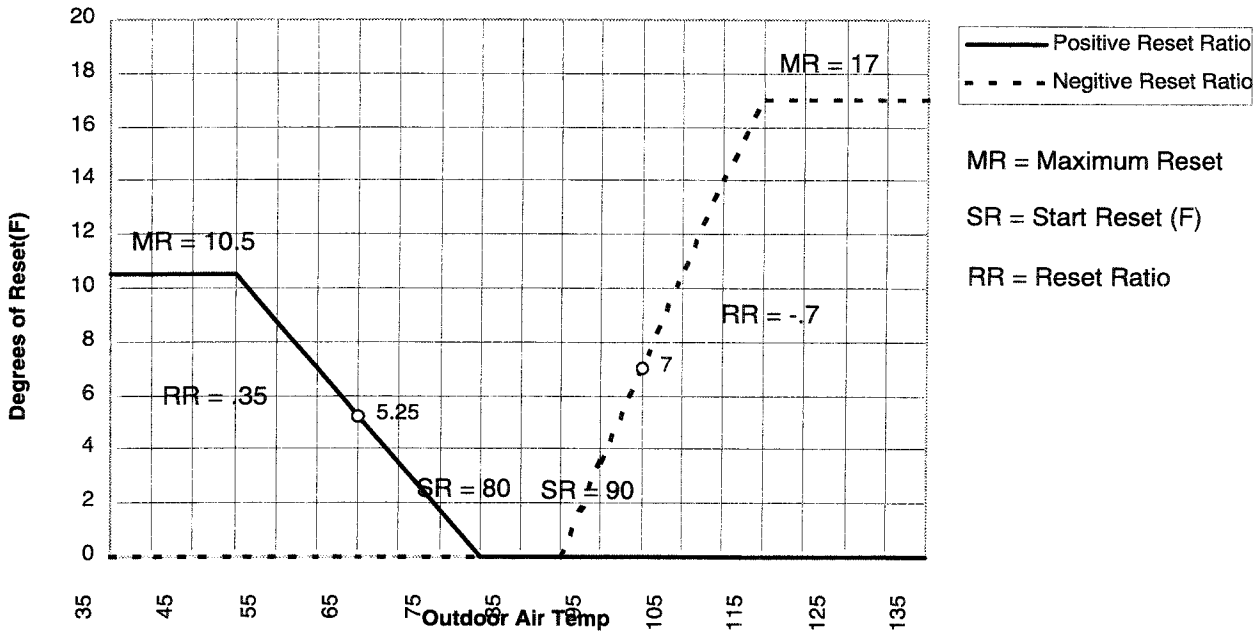

The following graph shows the reset function for Return CWR:

Reset Ratio			
+30	+50	+70	+100
6	10	14	20
5.4	9	12.6	18
4.8	8	11.2	16
4.2	7	9.8	14
3.6	6	8.4	12
3	5	7	10
2.4	4	5.6	8
1.8	3	4.2	6
1.2	2	2.8	4
.6	1	1.4	2
0	0	0	0

Return CWR

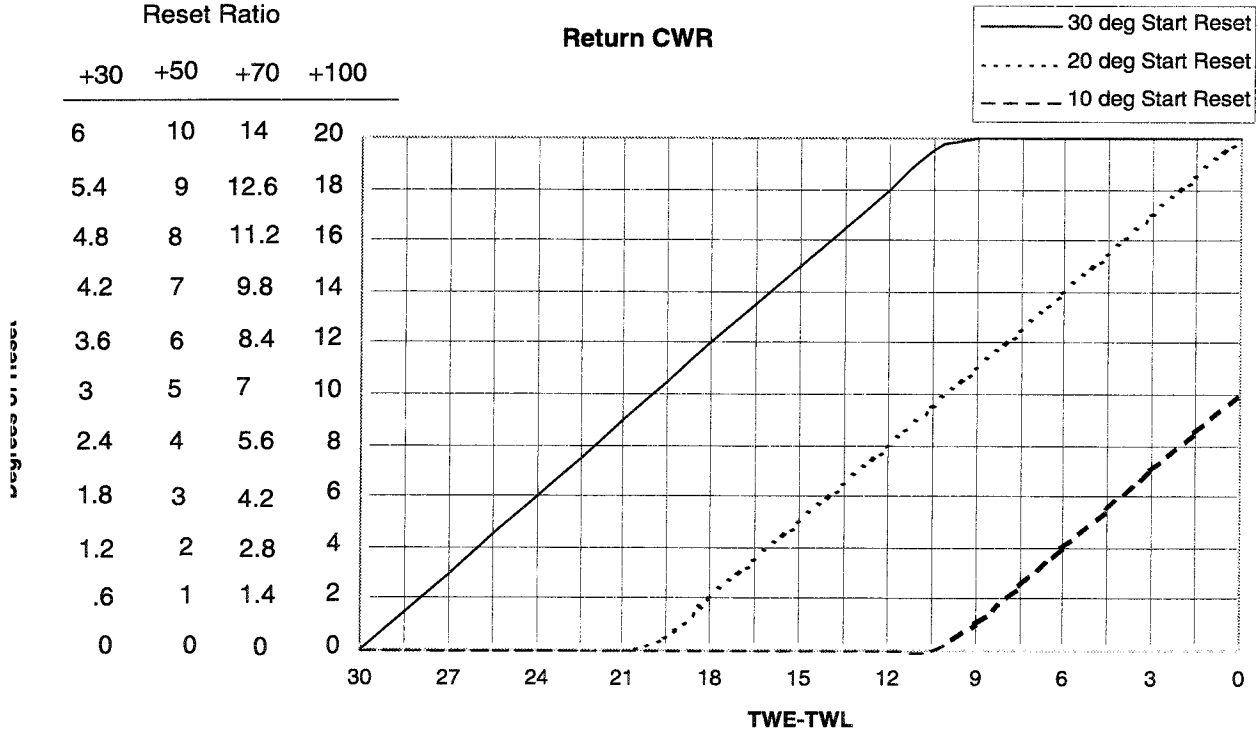

Note: This graph assumes Maximum Reset is set to 20 degrees.

Example of Calculating Return Reset:

If:

Reset Ratio = 50%

Start Reset = 25

TWE = 65

TWL = 45

Maximum Reset = 8

How many Degrees of Reset will there be?

Degrees of Reset = Reset Ratio* (Start Reset - (TWE-TWL))

Degrees of Reset =.5*(25-(65-45))

Degrees of Reset = 2.5

If:

Reset Ratio = 70%

Start Reset = 20

TWE = 60

TWL = 53

Maximum Reset = 14

How many Degrees of Reset will there be?

Degrees of Reset = Reset Ratio* (Start Reset - (TWE-TWL))

Degrees of Reset =.7*(20-(60-53))

Degrees of Reset = 9.1

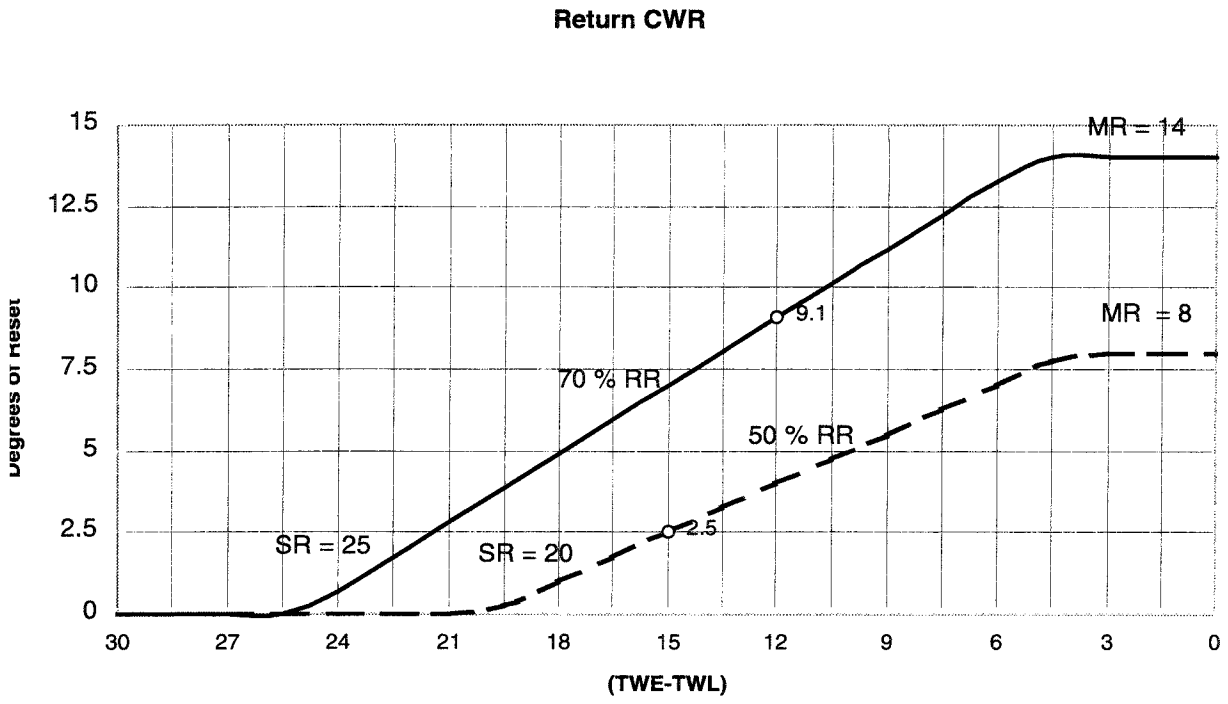

The following graph illustrates the Reset Actions of the above examples:

Note: This graph assumes a Design Delta Temp of 10 degrees.

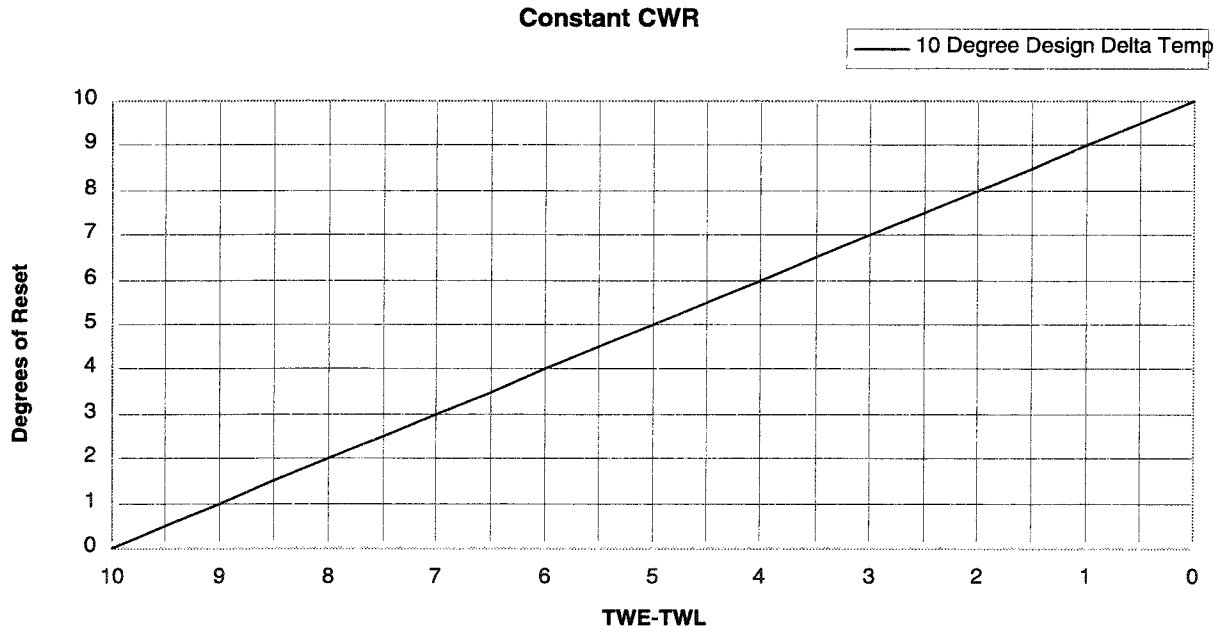

Information on the Printer Option

Th Printer module is essentially a TCI comm 4 board with a daughter board installed to communicate RS232 to the Printer. The Printer module is a listen only device and its software revision level will not show up in service tests.

The diagnostic LED in the upper left hand side of the module is only active for the printer module, and when it is on, this indicates a loss of communications with the Chiller module.

The Green LED labeled RXA should be continuously flashing.

The Red LED labeled TXA should never come on.

The Green LED labeled RXB will blink once every few seconds while the Printer module is printing, only if X-ON X-OFF handshaking is enabled.

The Red LED labeled TXB will blink constantly while the printer is printing.

The DIP switch settings for the Printer module follow:

1-off

2-off

3-on

Dip switch settings for the Okidata Microline 184 turbo printer follow:

Switch Bank 1

Parity Type	**Switch 1**
odd parity	on
even parity	off
Parity	**Switch 2**
No parity	on
With parity	off
Data Bits	**Switch 3**
8 bits	on
7 bits	off
Handshaking	**Switch 4**
Ready/Busy	on
X-on/X-off	off
Test Select	**Switch 5**
Circuit	on
Monitor	off
Mode Select	**Switch 6**
Print mode	on
Test mode	off
Busy Line Selection	**Switches 7,8**
SSD-Pin 11	off, on
SSD+ Pin 11	off,off
DTR- Pin20	on, on
RTS- Pin 4	on, off

Switch Bank 2

Transmission Speed	**Switch 1,2,3**
19200	on, on, on
9600	off, on, on
4800	on, off, on
2400	off, off, on
1200	on, on, off
600	off, on, off
300	on, off, off
110	off, off, off
DSR Input Signal	**Switch 4**
Active	on
Inactive	off
Buffer	**Switch 5**
32 bytes	on
256 bytes	off
Busy Signal Timing	**Switch 6**
200 ms	on
1 second	off
DTR Signal	**Switch 7**
After power on	on
Printer selected	off
Not Used	**Switch 8**

A

Active current limit setpoint 10
Adaptive frequency drive. See also AFD
Adjustable termination setpoint 102
AFD 9, 16, 44
Analog input tables 59
ASHRAE Guideline 3 Report 37
Auto mode 18, 104
Auto-Stop 57

B

Bearing temperature 10
Buffer diagnostics 19

C

Calibration check 82
Chilled water reset 15, 38, 110
Chilled water reset. See also CWR
Chilled water setpoint 18, 99, 111
Chilled water setpoint. See also CWS
Chiller module 6, 7, 9, 10, 11, 13, 14, 15, 17, 19, 20, 22, 29, 34, 36, 39, 43, 44, 45, 47, 50, 52, 58, 98, 118
Circuit module 6, 10, 14, 16, 18, 21, 22, 40, 88
CLC 6
CLD 10, 11, 12, 13, 15, 18, 19, 25, 26, 28, 29, 33, 34, 36, 37, 52, 88, 89, 95, 98, 113
CLD panel 37
Clear Language Display. See CLD
Com 3 module 37
Com 4 module 37
Communications interface module 37
Communications test 33
Compressor motor starter panel 6
Compressor motor winding 80
Compressor overload 93
Compressor report 11, 27
Compressor staging/control 46
Condenser pressure 14
Condenser refrigerant pressure limit 95
Condenser water flow 14
Constant return reset 110
Control circuit 96
Control Panel
  module description 4
Control panel 34, 44
  layout 4
CTs 9, 10, 14, 20, 21, 23, 25, 27, 28, 86, 87
Current overload 10
Current overload protection 93
Custom menu 14
Custom report 11, 37
CWR 39, 113, 115
CWS 56, 94, 101, 102, 111, 112, 113

D

DCM 46
Degraded communications 11
Demo mode 11
Diagnostic stop mode 19
Differential oil pressure 21
Dip switch settings 47
Duplex 46
Duplex control 8
Duplex control module (DCM) 8, 46, 48

E

Evaporator refrigerant temperature limit 94
External Auto-Stop 58
External chilled water setpoint 15, 56, 57
External current limit setpoint 16, 55, 90, 91

F

FC 17, 98
FC. See also Free cooling
Field startup 23
Field start-up group 18, 100
Field start-up menu 16, 88, 94
Forced unload setup 32
Free cooling 16, 37, 42
Free cooling relay checkout 97
Friendly shutdown 58

G

General Troubleshooting Index 1
Guide 99
Guide vane linkage 28
Guide vane stepper motor 45

H

Handshaking 48
Head relief 96
Heat recovery 42
Heat sink 35, 44

Heat sink temperature 35
HGBP 18, 41, 100, 101
HGBP mode 99
High compressor discharge temperature 99
High pressure switch 23
High vacuum lockout 17
Hot gas bypass 13, 18, 99
Hot gas bypass mode 101
Hot gas bypass timer 13
Hot gas bypass. See also HGBP
HPC 20

I

I/O module 34, 41, 99, 100
Ice building 18, 102, 103, 104
Ice machine control. See Ice building
Ice making. See Ice building
ICS 29
IFW 10, 36
IGV 10, 11, 13, 18, 19, 98, 99, 100, 101, 102, 103
Inlet guide vane. See IGV
Inlet guide vanes 30, 99, 100, 101
Interprocessor Communications Link. See IPC 6
IPC 4, 6, 8, 11, 15, 17, 26, 29, 34, 39, 47, 55
IPC Buffer 47
Isolation device 15, 16

L

LED 11, 12, 13, 15, 19, 25, 26, 108, 118
Limit mode 19
Loading problems 19
Local Clear Language Display 7, 13
Locked rotor 93
Loss of communication 11
Low evaporator refrigerant temperature 17
LWT 19

M

Machine configuration 9, 15, 16, 18, 23, 57
Machine configuration group 100
Machine configuration menu 17, 25, 27, 55, 88, 91, 99
Manual vane control 19
MAR 14, 39, 103
Mediamate 83
Memory error 20
MMR 14, 16, 23, 27, 39, 84, 98, 103
Module compatibility 36
Module setpoints 7
Module set-up 55
Module values 44
Momentary power loss 20, 44
Motor winding resistance 53
Motor winding temperatures 21
Motor windings 107
MPL (See also Momentary Power Loss) 21

N

NOVRAM 6

O

Oil cooler 22
Oil eductor valve 22
Oil heater 22
Oil pressure regulator 21
Oil pressure sensor 21
Oil pressure sensor calibration 82
Oil pump 21, 82
Oil pump capacitor 21
Oil pump discharge pressure sensor 22
Oil pump motor 21, 40
Oil sump 40, 83
Oil tank heater 22, 40
Oil tank temperature 40
Okidata 8, 48, 118
Operating ranges 31
Operator settings group 57
Operator settings menu 26, 97
Options module 7, 10, 15, 16, 17, 18, 37, 38, 42, 47, 55, 56, 90, 91, 92, 96, 97, 98
ot 13
Overload trip time 93

P

Packets 33, 36
Panic stop mode 30
Percent condenser output 88
Percent RLA Output 92
PFCCs 20, 21, 27
Phase loss 23, 44
Phase reversal 25, 44
Phase unbalance 25, 44
Phase voltage 38
Phoenix connectors 4
Power loss 10
Pressure transducers 4
Printer 25, 37, 48, 118

Printer interface module 8, 37
Printer module 108, 118
Printer option 8, 25, 118
PT leads 105, 106
PTs 27
Purge compressor 26, 64
Purge control panel 43
Purge module 7, 43

R

Radio frequencies 12
Recommended wire length 105, 106
Refrigerant differential pressure 89
Refrigerant monitor 6, 40, 55
Refrigerant report 88
Refrigerant type 17
Remote CLD 7, 37
Remote starter 11, 34
RLA 7, 27, 37, 42, 55, 90, 92
RMWC generation monitor 55
Run mode 10, 19, 20

S

SCR 25
Scrolling 28
Service settings group 57
Service settings menu 26, 29, 48
Service test manual mode 19
Service test menu 12, 18, 30
Setpoint control 46
Sine wave 20
Soft load control 19
Solid state starter 6, 16, 25, 35
Start inhibit mode 35
Start mode 20
Starter 38
Starter contactor sequence 84
Starter driver 44
Starter dry run test 28
Starter interlock 20
Starter module 6, 9, 11, 12, 13, 15, 16, 20, 21, 23, 25, 26, 27, 28, 29, 30, 34, 35, 36, 39, 44, 86, 87
Stepper board 51, 53
Stepper board, test 50
Stepper module 6, 9, 17, 19, 21, 36, 45, 50, 51, 52, 53
Stepper motor 27, 34, 45, 50, 52, 54
Stepper motor connections 35, 53
Stop mode 19, 27
Strainers 17
Summit 7, 37
Surge 28
Switch Bank 48

T

TCI 13, 46, 107
TCI module 36, 107, 108
TCI option 12
Time clock 57
Tracer 12, 17, 18, 19, 29, 37, 43, 47, 96, 98, 99, 102, 103, 104, 107, 108
Tracer communications interface 7
Trane CTV-CSB-90 12
Trane CTV-CSB-92 12
Trane CVHE-SB-36 9
Trane service alert 206 22
Trane service bulletin CHVE-CSB-45C 17
Trane service bulletin CVHE-CSB-35 26
Trane service bulletin CVHE-CSB-45B 29
Trane service bulletin CVHE-SB- 91 36
Trane service bulletin CVHE-SB-90 36
Trane service manual CVHE-CSB-31 17
Transducer checkout 83
Transition resistors 26
Trim balance procedure 30
Troubleshooting 50, 88
Troubleshooting, IPC 34

U

UCP2 clock 109
UCP2 options 37

V

Vane closure 20
vane control 16, 52, 98

W

Water pressure transducer 83

TRANE

General Service Bulletin

CVHE-SB-33A

Library	**Service Literature**
Product Section	**Refrigeration**
Product	**Centrifugal Liquid Chillers**
Model	**CVHE, CVHF,CVHG,**
Literature Type	**Service Bulletin**
Sequence	**33A**
Date	**September 26, 1996**
File No.	**SV-RF-CTV-CVHE-SB-33A-**
Supersedes	**SV-RF-CTV-CVHE-SB-33 - 3/95**

Literature History: CVHE-SB-33 - Original issue of bulletin - March 1995 - CVHE/F/G Installation Procedure for the Thrust Bearing Assembly
CVHE-SB-33A - September 1996 - Redefined installation procedures, clarified units affected

Subject: CVHE/F/G Installation Procedure for the Thrust Bearing Assembly

Introduction:

A production design change has been made to the CVHE/CVHF/CVHG product line which affects the installation procedure for the thrust bearing assembly. This bulletin will outline these changes and explain how to identify which parts are required for field service replacement of the duplex ball bearing assembly. Also, the proper procedure and tools required for thrust bearing replacement are outlined in this bulletin.

Note: This procedure must be followed in lieu of the procedure described in CTV-SG-2.

Units Affected:

All CVHE ("C" design sequence and later), CVHF and CVHG CenTraVacs are affected by this bulletin. Beginning with design sequence "2B" for the CVHE, "J0" for the CVHF, or "C0" for the CVHG machines, the following changes were made in production:

1. The motor shaft diameter at the thrust bearing journal was increased to provide interference fit of 0.0002" to 0.0011".

2. The number of shaft threads at the motor end of the shaft were increased.

3. The diameter of the motor shaft shoulder adjacent to the inner race of the thrust bearing assembly was increased.

4. The thrust bearing end of the motor shaft is stamped "K4" to indicate the above changes are present.

©American Standard Inc. 1996

Since the Trane Company has a policy of continuous product improvement, it reserves the right to change specifications and design without notice. The installation and servicing of the equipment referred to in this booklet should be done by qualified, experienced technicians.

Discussion:

It should be noted that the motor thrust bearing (at the OPPOSITE DRIVE END of the motor, i.e., electrical terminal end of the motor) can be replaced without disassembling the compressor.

DRIVE END refers to the shaft extension or compressor end of the motor. OPPOSITE DRIVE END refers to electrical terminal end of the motor.

Figures 1 and 2 show cutaway and exploded views of the motor. Refer to these and other illustrations shown during disassembly and reassembly.

⚠ WARNING:
Before working on this or any electrical equipment, always disconnect all electrical power. Failure to disconnect power may result in serious personal injury or death due to electric shock or entanglement in rotating parts.

Motor Thrust Bearing Replacement:

Disassembly

1. Go to the OPPOSITE DRIVE END of the motor. Remove the oil supply and drain lines at this end of the motor. Paint should be removed from the lines prior to cutting the lines (use a tubing cutter) if flanges are not present to allow removal. Use sandpaper to remove the paint. See Figure 3. The cut copper tubing will be reconnected by soft soldering. All openings must be sealed while work is in progress to prevent debris from contaminating the lubrication system.

2. Remove the OPPOSITE DRIVE END bearing inspection plate. Remove the old O-ring and clean the sealing surfaces of the plate. See Figure 4.

3. To insure proper component alignment when the motor and/or compressor is reassembled, drill two 1/4-inch holes in the motor end bell which will allow for installation of two roll pins during reassembly. These holes must be drilled before loosening the motor end bell retaining bolts. Figure 4 illustrates where these holes are to be drilled. Make certain there are roll pins installed before proceeding with Step 4.

4. Loosen the bearing bracket (motor end bell) retaining bolts. Remove two of the bolts and replace them with guide pins which are used to support the bracket and motor shaft weight. See Figure 5.

5. Remove the four 9/16-inch capscrews and bearing retaining ring. Refer to Figure 6.

6. Remove the eight 3/8-inch-16 Allen-head screws which secure the bearing seal. See Figure 7.

Figure 1
Cutaway View of CVHE Compressor Motor "C" and Later Design Sequence

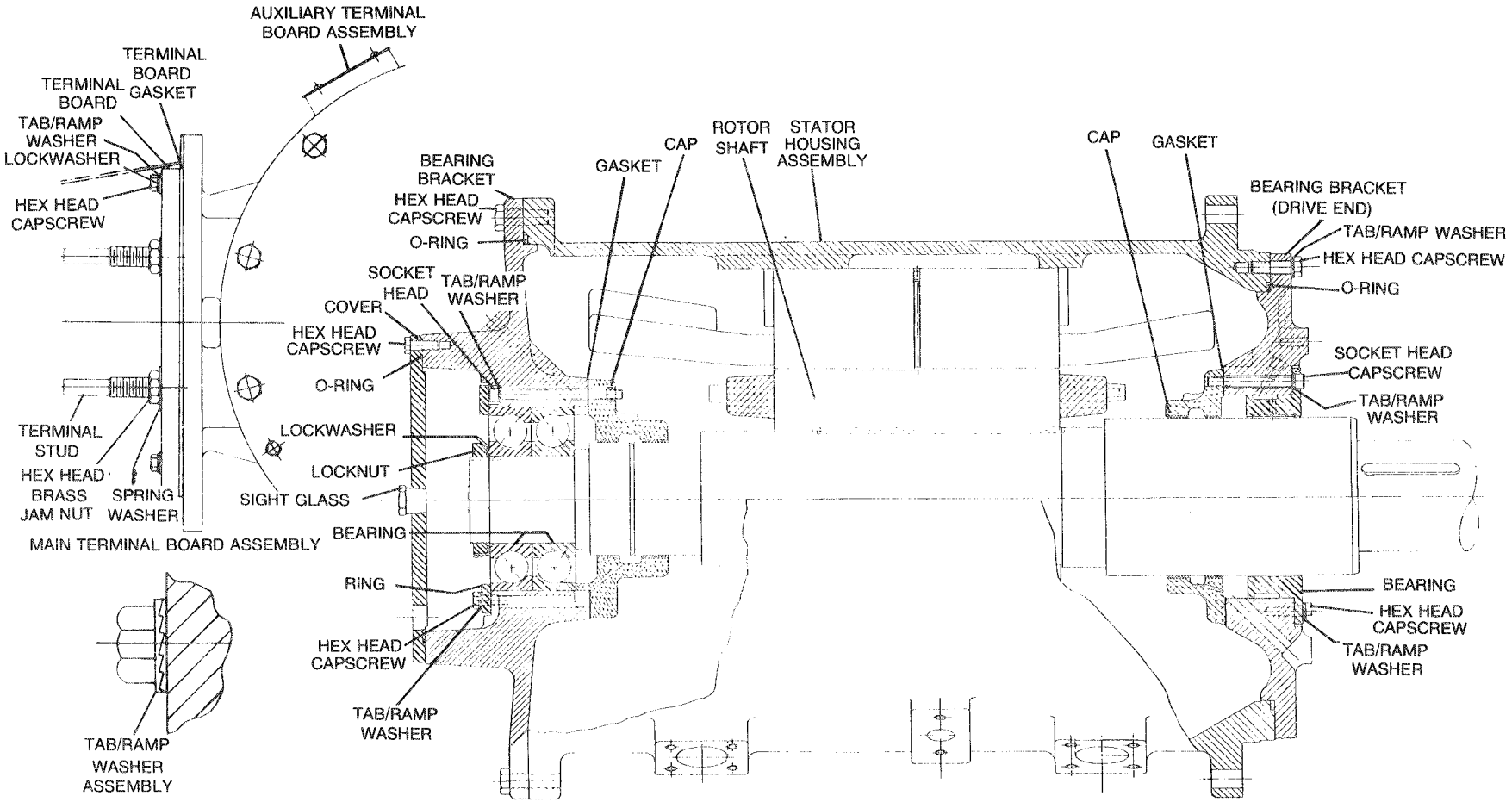

Figure 2
Exploded View of Model CVHE Compressor Motor

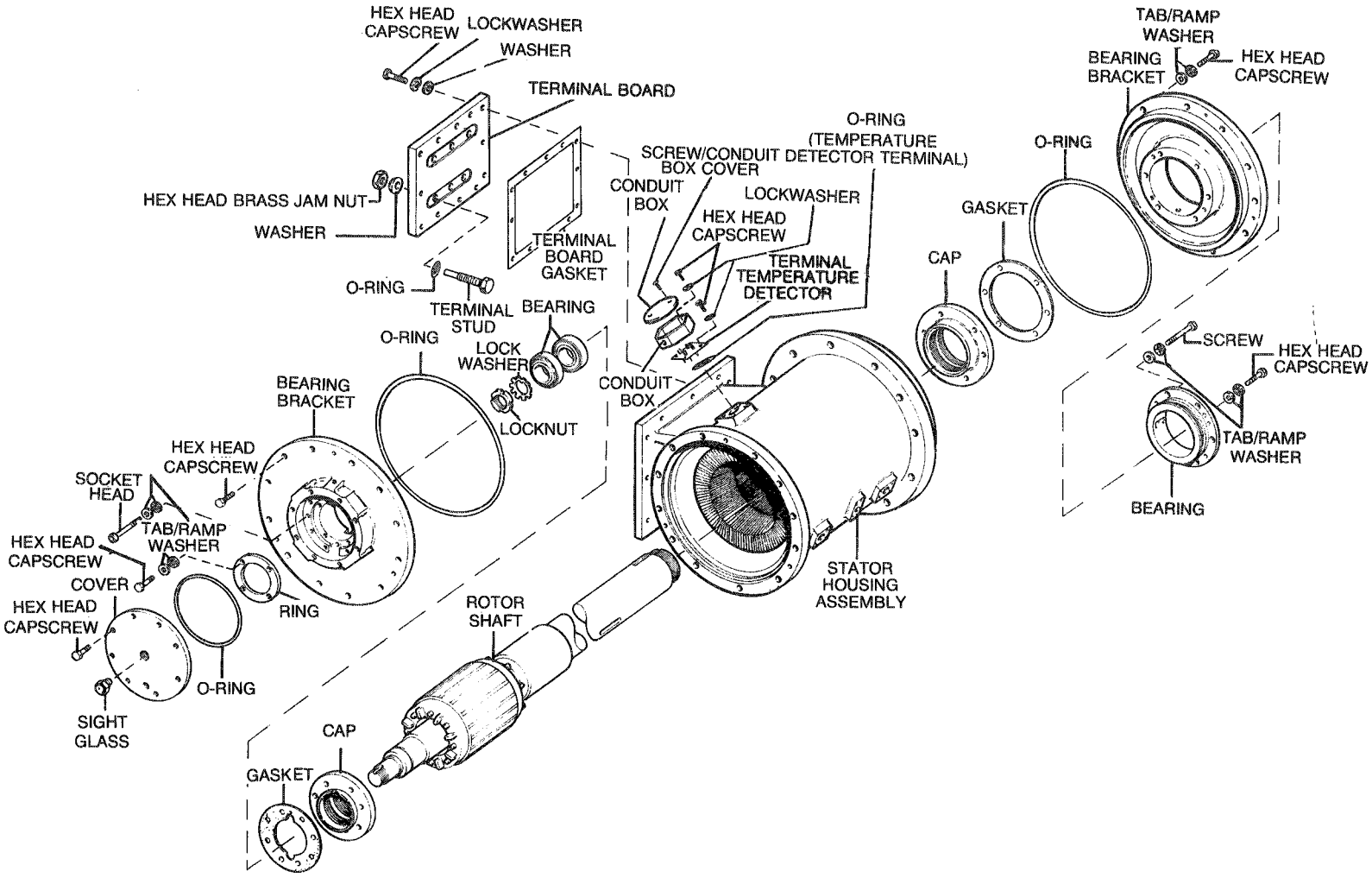

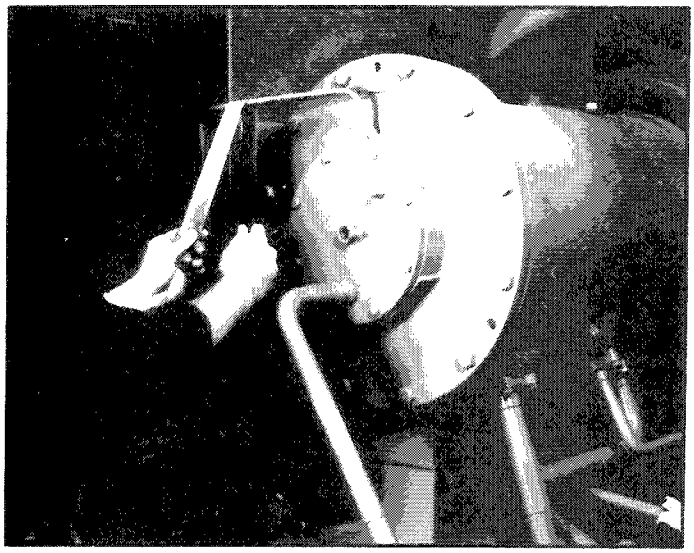

Figure 3
Removing Paint from Oil Supply Line

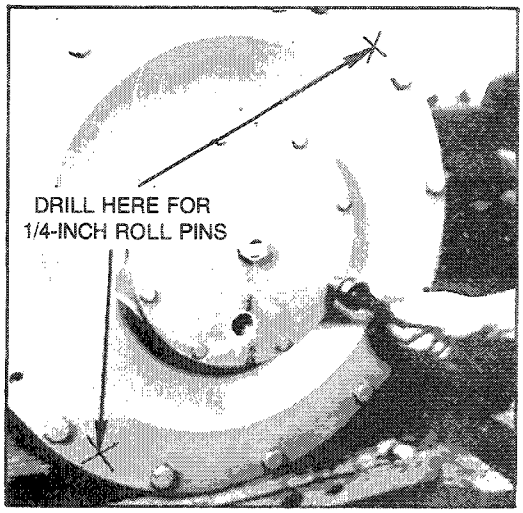

Figure 4
Removing Bearing Inspection Plate

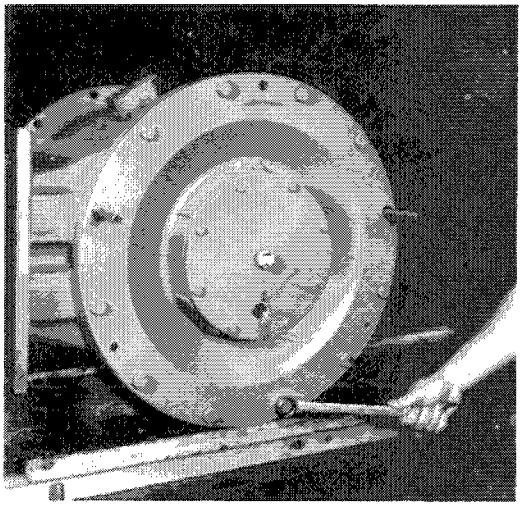

Figure 5
Removing Bearing Bracket Retaining Bolts

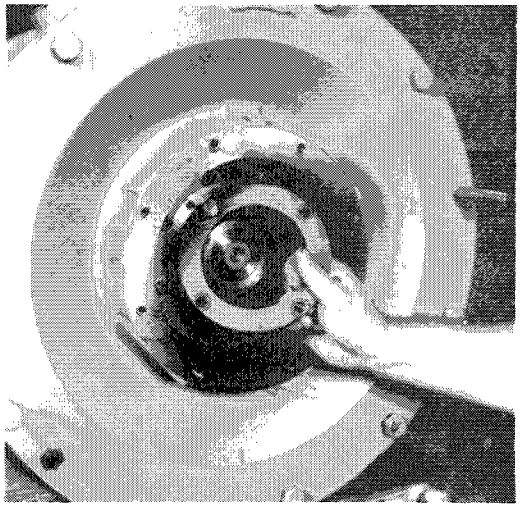

Figure 6
Removing Bearing Retaining Ring

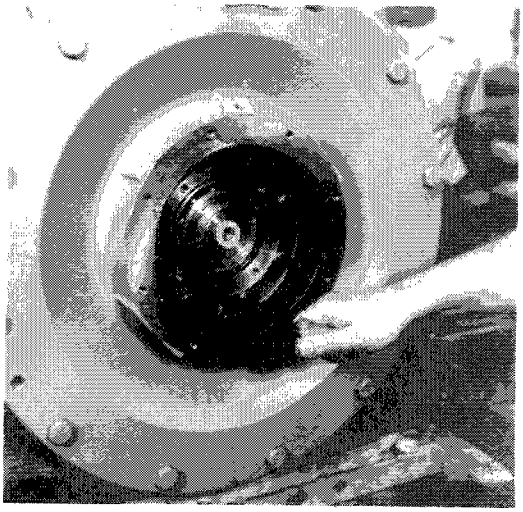

Figure 7
Removing Bearing Retaining Screws

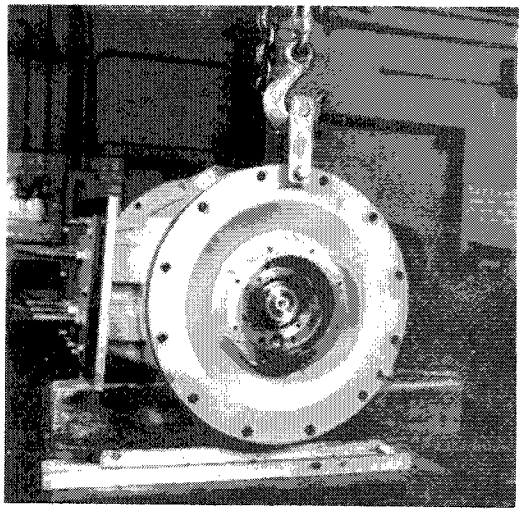

Figure 8
Removing Bearing Bracket
(Opposite Drive End)

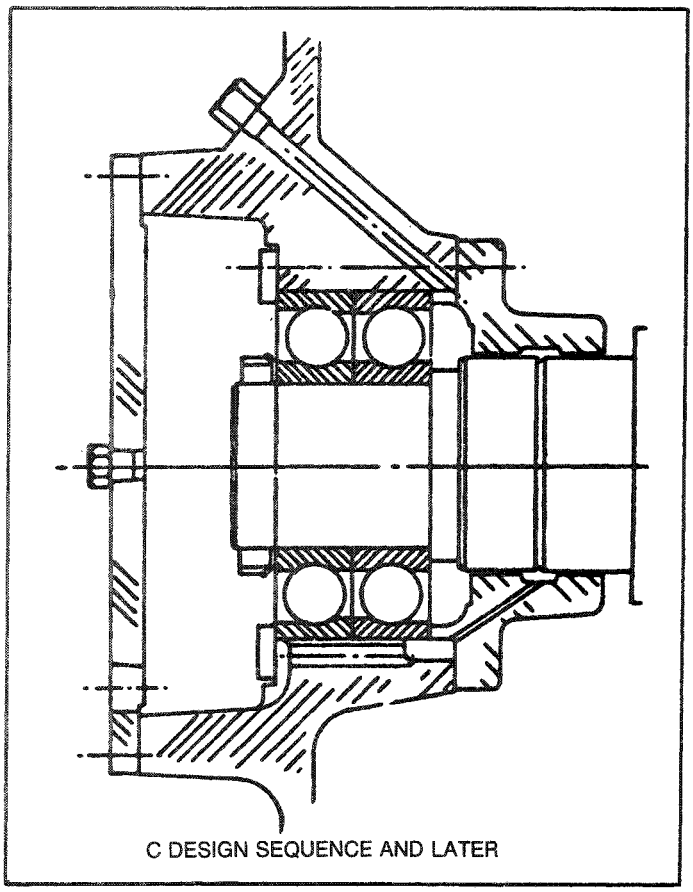

Figure 9
Opposite Drive End Bearing and Bearing Bracket Assembly

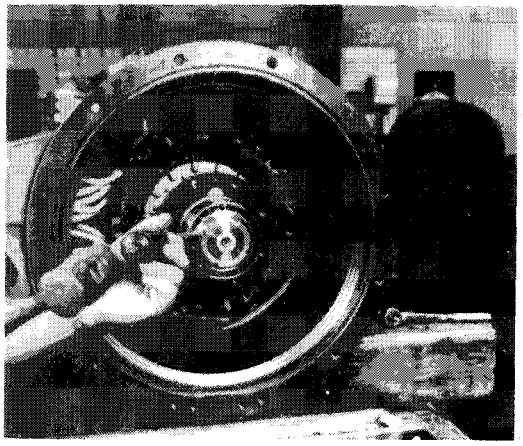

Figure 10
Bending Tab on Thrust Bearing Lockwasher

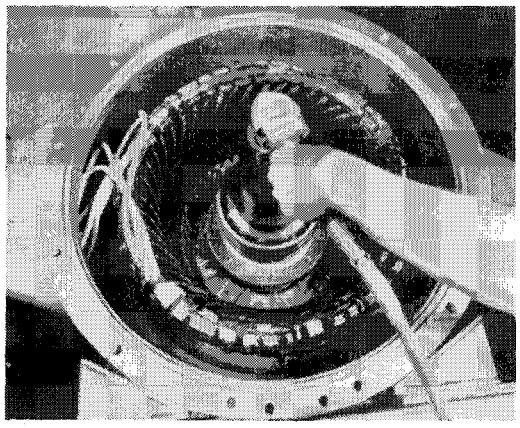

Figure 11
Using Socket Tool to Remove Locknut

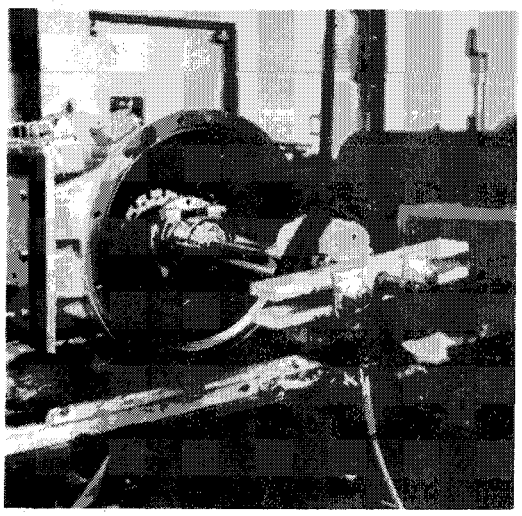

Figure 12
Using Bearing Puller to Remove Thrust Be

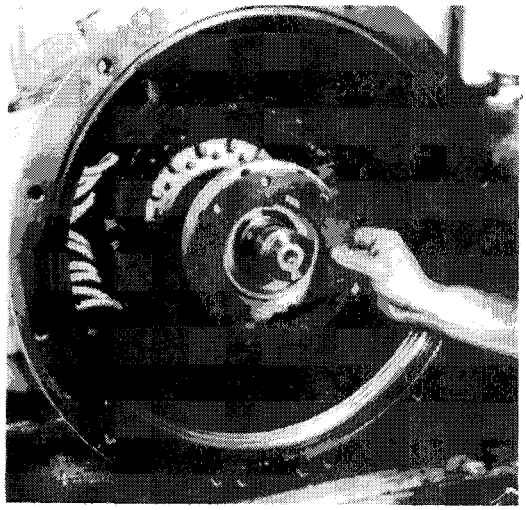

Figure 13
Inner Bearing Cap Seal Gasket

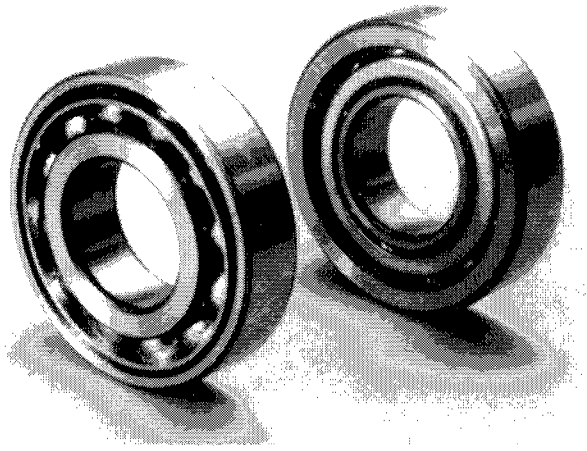

Figure 14
Thrust Bearings

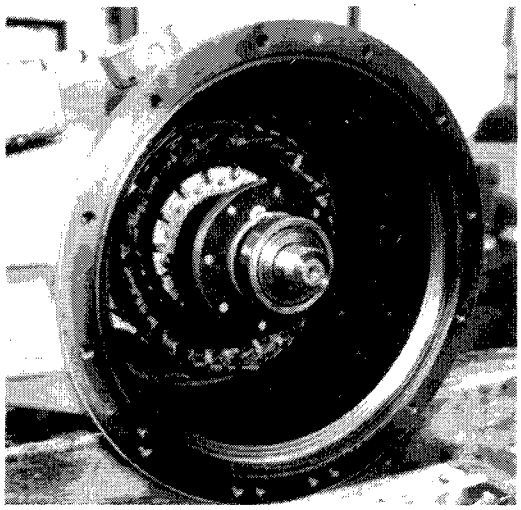

Figure 15
Installing Inner Half of Thrust Bearings

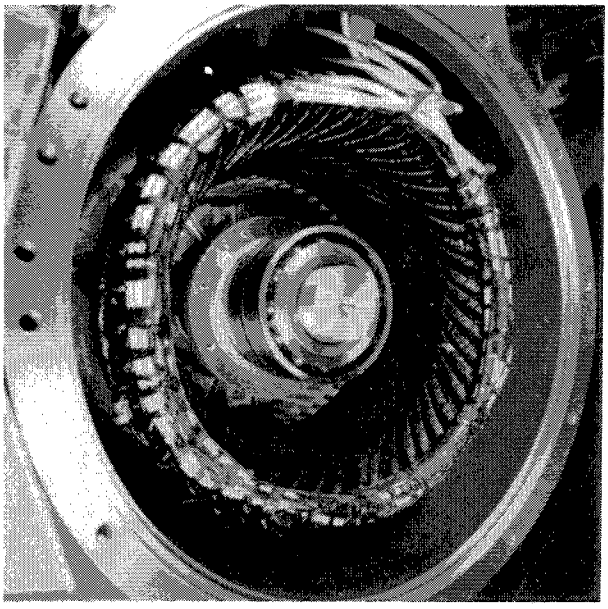

Figure 16
Installing Outer Half of Thrust Bearings

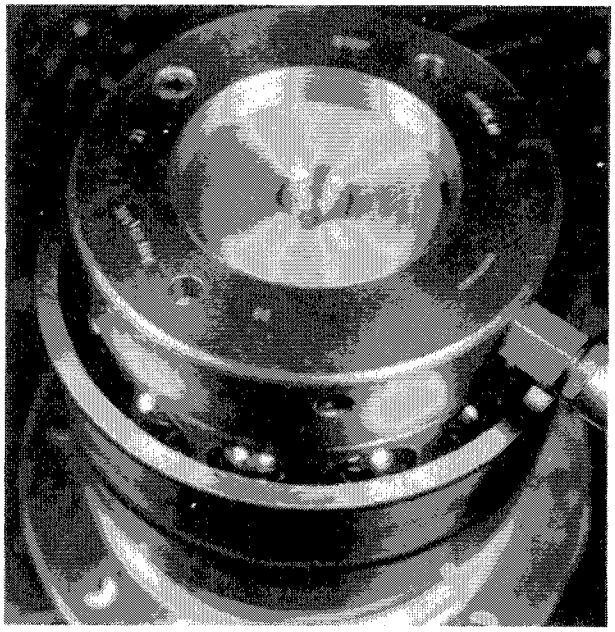

Figure 17
Installation of Hydraulic Assembly Nut

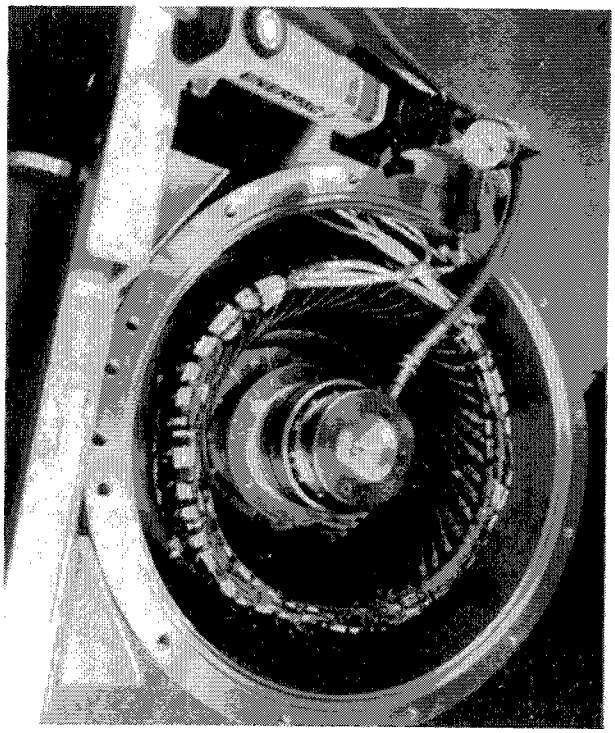

Figure 18
Seating the Thrust Bearings with Hydraulic Assembly Nut

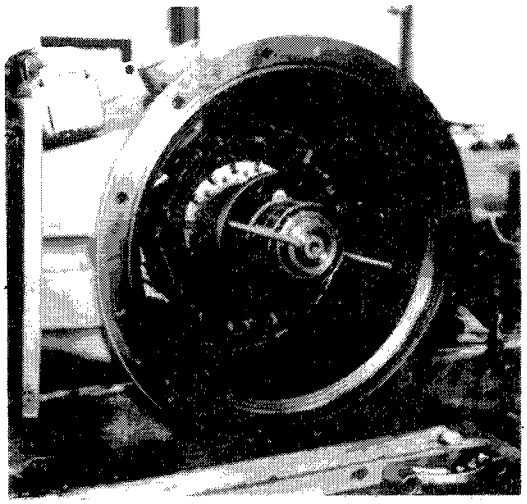

Figure 19
Installing Opposite Drive End Bearing Seal



Figure 20
Installing Opposite Drive End Bearing Bracket

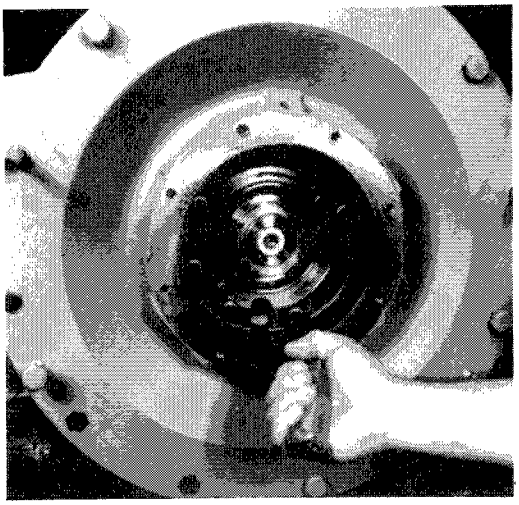

Figure 21
Tightening Inner Bearing Seal Retaining Bolts

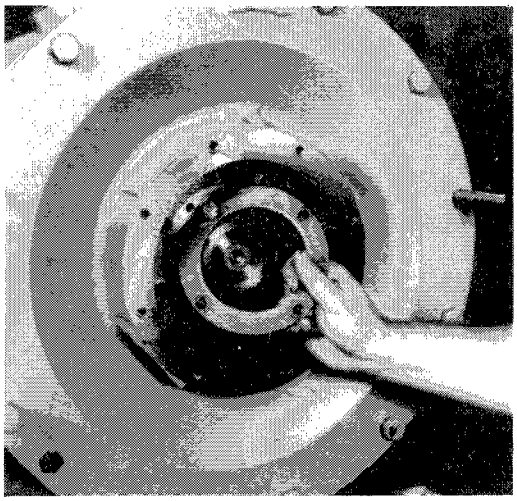

Figure 22
Bearing Retaining Ring

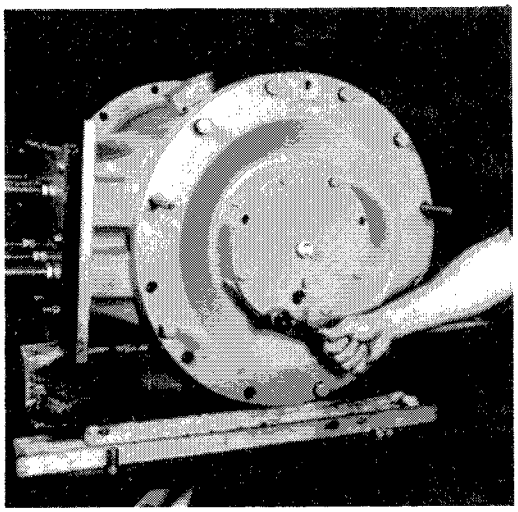

Figure 23
Installing Opposite Drive End Bearing Inspection Cover

7. Remove the bolts retaining the bearing bracket. There are two short bolts used in the electrical terminal box area as shown in Figure 8. These should be identified properly so that they are reinstalled correctly.

Using the jack-bolt holes, remove the bearing bracket. The bearing bracket must be separated from the outer ball bearing race. The bearing bracket weight must be supported from overhead (use a chain hoist or similar). Separate the bearing bracket from the bearing race using a gentle back and forth rocking action. As the bracket is removed it will drop slightly as the sealing surface is cleared (when the bracket has been moved out approximately 1/2-inch). Once the sealing surface is cleared the bearing bracket can be lowered until the rotor rests on the stator. See Figure 9. Extreme care must be exercised to prevent the bracket from jamming on the bearing and to prevent movement of the rotor assembly which could in turn damage the stator assembly. Remove the bearing bracket completely.

8. Remove the thrust bearing lockwasher and locknut. Refer to Figures 10 and 11. Bend back the lockwasher tab and then use an impact wrench and socket tool to drive off the locknut.

9. Remove the thrust bearing. Refer to Figure 12. Use a bearing puller tool. The puller must pull on the inner race of back bearing to prevent damage to the bearing and shaft. Important items to remember when pulling the bearing are:

a. The puller must be square with respect to the shaft.

b. The puller must pull on the inner race. It will be necessary to place 0.050-inch shims between the puller and bearing to accomplish this.

c. The bearing must not be allowed to drop on the shaft or puller. A cloth rag should be used to protect the bearing.

d. Never heat the bearing to remove it since this may damage the bearing or the motor.

e. The weight of the puller must be supported by a sling and chain fall.

10. Remove the inner bearing cap (seal). See Figure 13. Exercise care to prevent damaging the gasket. Notice that there is an oil drain hole at the bottom of the seal. This must be plainly marked to insure that the seal is reinstalled with the drain hole at the bottom. The notch in the bearing cap must be positioned at the top when facing the motor.

Reassembly

1. Go to the OPPOSITE DRIVE END of the compressor motor. Place the OPPOSITE DRIVE END inner bearing cap with a new gasket on the motor shaft. Make certain the oil drain hole in the cap is at the bottom and the notch is at the top (Figure 13).

2. When changing a CVHE/CVHF/CVHG thrust bearing assembly, it is critical to determine what shaft design is present. The only sure way to determine what shaft is present is to examine the thrust bearing end of the shaft and see if a "K4" is stamped there. The "K4" stamped in the end of the shaft may vary in size from 1/4" high to 1/16" high so it may be difficult to see it through the sight glass in the bearing inspection cover. If the motor shaft has not been changed the design sequence can be used to determine what shaft type is present. After determining the shaft design, use the appropriate procedure described as follows:

Great care must be taken to avoid damage to the shaft shoulder and journal during thrust bearing removal. After the thrust bearings are removed, examine the shaft for signs of excessive wear or fretting, especially at the shaft journal and shoulder. The shaft should be measured at the journal O.D. to insure that the shaft is in tolerance. This will require a calibrated micrometer which is capable of reading "0.0001". If the shaft condition is in question, call the CenTraVac Technical Service department in La Crosse for assistance.

Non-"K4" Marked Shaft
The following bearings will be required for a **non- "K4"** marked shaft:

Shaft Size	**Part No.**	**Non-"K-4" Shaft Journal Dimensions**
Small diameter (2.16" Bore)	BRG0913	2.1650" to 2.1655"
Large diameter (3.54" Bore)	BRG0914	3.5429" to 3.5434"

These bearings have a small inner race I.D. which gives a press fit of 0.0002" to 0.0011" with a non "K4" shaft.

⚠ **Caution: These bearings can only be used with a non- "K4" Marked Shafts!**

Note: These bearings come with a new lockwasher and locknut.

"K4" Marked Shaft
The following bearings will be required for a **"K4"** marked shaft:

Shaft Size	**Part No.**	**"K-4" Shaft Journal Dimensions**
Small diameter (2.16" Bore)	BRG0609	2.1656" to 2.1661"
Large diameter (3.54" Bore)	BRG0610	3.5435" to 3.5440"

Note: These bearings come with a new lockwasher and locknut.

Installing the Bearings:

Note: Use either Step 3 or Step 4 depending on bearing manufacturer, DO NOT USE BOTH STEPS WHEN INSTALLING THE BEARINGS!

Only matched bearing sets shall be installed on the motor shaft as shown in Figure 14. A matched bearing set will have the same numerical serial number but one of the bearings will have a letter following the serial number. The bearing set should not be washed unless absolutely necessary. If the bearings are washed, great care must be taken to insure cleanliness of the solvent and washing container.

The bearing set should be heated uniformly to a final temperature of 230°F to 250°F. If a induction heater is used, the bearings should be demagnetized before installation on the shaft. A maximum of 5 gauss magnetism is allowable. A hand held gauss meter can be used to measure residual magnetism.

3. Mounting NTN Bearings:

   a. Each bearing shall be marked for high spots. High spot marks are usually small circles stamped or etched into the face of both the inner and outer races of each bearing. Any bearing set without inner and outer races marked for high spots shall be rejected.

   b. The bearing set shall be mounted on the motor shaft in a back-to-back arrangement (sides of outer races with identification marks should face each other). Install the first half of the bearing set on the motor shaft with the thin side of the outer race facing the rotor until the bearing seats against the shaft shoulder. See Figure 15.

   c. Note the position of the high spot marks on both races of the installed inner half of the bearing set. Rotate the outer race of the installed bearing until the high spot marks line up with each other.

   d. Prior to installing the outer half of the bearing set on the motor shaft, line up the high spot marks on both races. Install the bearing on the motor shaft with the thin side of the outer race facing out of the motor and the high spot marks on both races 160° to 200° away from the high spot marks on the inner half of the bearing. See Figure 16.

4. Mounting SKF Bearings:

   a. Each bearing shall have alignment marks. One half of a "V" has been scribed or etched on the OD of the outer race of each bearing and a line has been scribed across the bore of the inner race of each bearing. When the bearing halves have been properly arranged on the shaft, the halves of the "V" on the OD of the outer races will line up to form a complete "V" and the lines in the bores of the inner races will also line up.

   b. The bearing set must be mounted on the shaft in a back-to-back arrangement.

   c. Remove the first half of the bearing set from the heater. Note the location of the scribed line in the bore of the inner race. Align the inner race scribed line with the keyway of the shaft. Install the first half of the bearing set on the motor shaft with the thin side of the outer race facing the rotor. Allow the bearing to seat against the shoulder on the shaft. See Figure 15.

   d. Rotate the outer race of the installed bearing half unit until its "V" lines up with the scribed line in the bore of the inner race.

   e. Prior to installing the outer half of the bearing set on the motor shaft, line up the scribed line in the bore of the inner race with the half "V" on its outer race. Install the bearing on the motor shaft with the thin side of the outer race facing out from the rotor and both alignment marks lined up with alignment marks on the first bearing. Refer to Figure 16.

5. Seating the Bearings:

Note: The duplex ball bearing alignment sleeve tool is not required for thrust bearing installation and total indicated runout readings for the thrust bearing assembly are not required.

Hold the inner race of the outer bearing against the inner bearing half until the bearing tightens on the shaft. Allow the assembled bearing set to cool to 100°F or less. Install a hydraulic assembly nut on the shaft and hand tighten the piston end of the nut against the outer bearing. Refer to Figure 17. Attach a hydraulic hose to nut, bleed air from system and using a hydraulic pump with a regulator, pressurize the hydraulic nut to 2200 psi to seat the bearings against the shaft shoulder. See Figure 18. Verify the bearing is seated against the shaft shoulder by trying to put a 0.001 inch feeler gauge between the bearing race and the shaft shoulder. A properly seated bearing will have a .000 clearance. Relieve the pressure from the hydraulic nut, remove the hose from the hydraulic nut, and remove nut from shaft. Install a new tab washer and locknut. Do not use a hammer and spanner wrench to tighten the locknut. Use the proper size socket tool listed in Table 1 and use the following procedures.

6. Torquing of the Locknut:

Ideally a torque wrench should be used to apply the required torque to the locknut. This may be possible for the small diameter shaft units. For the large diameter shaft, a pneumatic impact wrench will be required to provide the torque required without allowing the rotor to turn in the stator. The following torque value is required.

Small Diameter Shaft - 60 to 80 Ft. - Lb.
Large Diameter Shaft - 160 to 200 Ft. - Lb.

To obtain an accurate torque value, the following method can be used to torque the locknut when a torque wrench cannot be used.

a. Install a new tabwasher and locknut, using the following parts: These parts should be included with the new bearing set.

Small Diameter Shaft	**Large Diameter Shaft**
Tabwasher - WAS0594	Tabwasher - WAS0595
Locknut - NUT0434	Locknut - NUT0435

b. Torque the nut to 10% of final torque value using a torque wrench and socket tool. This will require a torque of 6 to 8 Ft. - Lb., for the small nut and 16 to 20 Ft. - Lb. For the large nut.

c. Mark the nut and inner race in a straight line to act as a reference point. Use a fine tipped marker pen or equivalent.

d. Mark the inner race in a clockwise direction the following distance from the first mark:

Small Nut: .3" to .5" range
Large Nut: .5" to .7" range

This will provide a degree of rotation method for torquing the locknut.

e. Use the appropriate socket tool for the size of nut and pneumatic impact wrench to rotate the locknut until the mark on the nut falls in the range from (d). If a air source is not available, a large cylinder of dry nitrogen with a regular adjusted to 120 psi can be used to power the pneumatic impact wrench. A 3/4" drive wrench will probably be required for the large locknut.

f. Align a lockwasher tab with a slot in the locknut. Continue tightening the nut to align a tab to a slot. Do not loosen the locknut to align a tab to a slot - always tighten.

g. Carefully bend the locking tab into the slot in the nut. Be very careful not to pry on the bearing races or cage and take great care to ensure bearing cleanliness. Use a soft material, such as brass or nylon to bend the tab. Be careful that no metal burrs or shavings enter the bearing assembly.

h. Rotate the outer race of the bearing set to check for free turning. A slight continuous drag is normal due to the built in bearing preload. If difficulty is encountered in rotating the outer races, tap the face of the outer race assembly around the circumference of the outer race using a rubber or rawhide mallet. This should allow free rotation of the bearing assembly.

7. Install 3/8" -16 threaded rod into the opposite drive end bearing seal. Align the seal so that the oil drain hole is on the bottom. Be sure the gasket is installed and located properly. Refer to Figure 19.

8. Install the opposite drive end bearing bracket O-ring using LocTite 515 "Gasket Eliminator". Lift the bearing bracket using a chain hoist. The bearing bracket should be positioned on the guide rods which were installed in Step 4 of the disassembly section (Page 2) to support the weight. When positioning the bracket, the threaded rod connecting to the inner seal must pass through the bolt holes in the bearing bracket such that the oil drain hole is on the bottom.

Work the bearing bracket into place and secure it with several bolts. The bracket should slide over the bearings with minimal force.

9. Install the two roll pins that were drilled for prior to disassembly (or which were factory installed). These pins are necessary for proper relocation of the bracket so that the original compressor seal clearances are re-established. Tighten all bearing bracket bolts to 150 Ft. - Lb. Torque.

10. Refer to Figure 20. Set the inner seal by installing the socket head capscrews. Properly installed the outer race of the bearings should extend approximately 1/16-inch beyond the bearing bracket. If not, the bearing seal is not properly seated and the bearing will be allowed to float. This will result in serious compressor damage. Reposition the seal if necessary. Tighten the retaining bolts to 24 Ft.- Lb.

11. Install the bearing retaining ring and bolts, then tighten to 24 Ft. - Lb. See Figures 21 and 22. This retaining ring provides a clamping force on the bearing outer race to prevent it from rotating.

12. Install the opposite drive end inspection cover. Be sure and use LockTite 515 on the O-ring and outboard flange. See Figure 23.

13. Reassemble the bearing oil supply and drain lines. **If the lines were cut, use a copper coupling and soft solder to reconnect these lines, such as StayBrite silver bearing solder (96% tin, 4% silver) or 95-5 solder (95% tin, 5% antimony). These solders melt and flow in the 430°F to 465°F range. Do not over flux these joints.**

Note: (Use paste flux and not liquid acid flux). If these joints are brazed rather than soldered, it is absolutely mandatory to purge the lines with an inert gas while brazing. The preferred method is soldering.

14. Pressurize and leak test the chiller.

15. Air run chiller and take vibration readings per CVHE-SB-18 to insure unit meets vibration specifications. If the vibration levels are out of specification, a trim balance will be required.

Parts Information:

The following parts shown in Table 1 are required to allow a duplex ball (thrust) bearing to be installed. See Figure 24 for example of hydraulic assembly nut, hose and hand pump assembly complete.

Table 1

Qty	Description	Manufacturer/Part No.	Trane Part No.
1	Hydraulic Hose 6' Long - 10,000 psi 3/8" NPT Male x 1/4" NPT Male	ENERPAC H870	HSE0363
2	Coupler - Female Hydraulic 1/4" NPT M	ENERPAC 3050-2	CPL0392
1	Coupler - Male Hydraulic 1/4" NPT F	ENERPAC 3010-1	CPL0393
2	Adaptor - 1/4" NPT Female x 0.25" BSAT Male	ENERPAC F3HG	ADP0371
1	Hydraulic Assembly Nut-Small Bearing	SKF HMVC-11	NUT0729
1	Hydraulic Assembly Nut-Large Bearing	SKF HMVC-18	NUT0730
1	Socket for Large Locknut (1/2" Drive	WHITTET-HIGGINS BAS-11	TOL194
1	Socket for Large Locknut (3/4" Drive	WHITTET-HIGGINS BAS-18	TOL193
1	Hydraulic Hand Pump Assembly	See Figure 25	

The hydraulic assembly nuts require the installation of adapter ADP0371 to provide a fitting for attaching a quick coupler. This will require removal of the coupler fitting provided on the assembly nuts from SKF. This is a British thread and requires the use of a copper gasket when installing the adapter into the assembly nut. Install a coupler fitting into the 1/4" pipe fitting of the adapter on the assembly nuts (CPL0392). This will allow quick change out of the hydraulic nuts when going from one size to the other.

Attach the coupler (0.25 NPTF) CPL0393 to the male NPT connection on the hydraulic hose (HSE0363) as shown on Figure 24. The 0.375 NPT end of the hose attaches to the relief valve fitting of the hand pump assembly (No. 13 on Figure 25). A 0.375 coupler can be used to allow easy hose removal for transport, if desired.

Figure 24
Example Showing Hydraulic Assembly Nut, Hose and Hand Pump Assembly

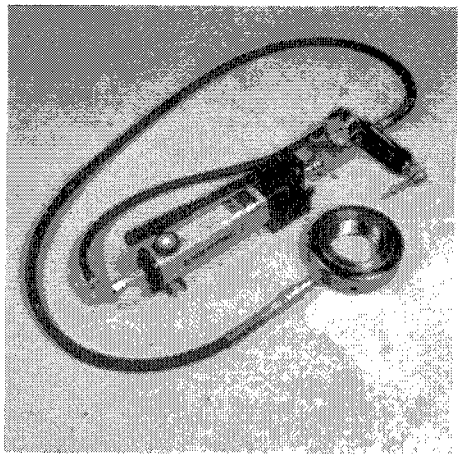

Figure 25
Showing Location of Parts on a Trane Hand Pump Assembly

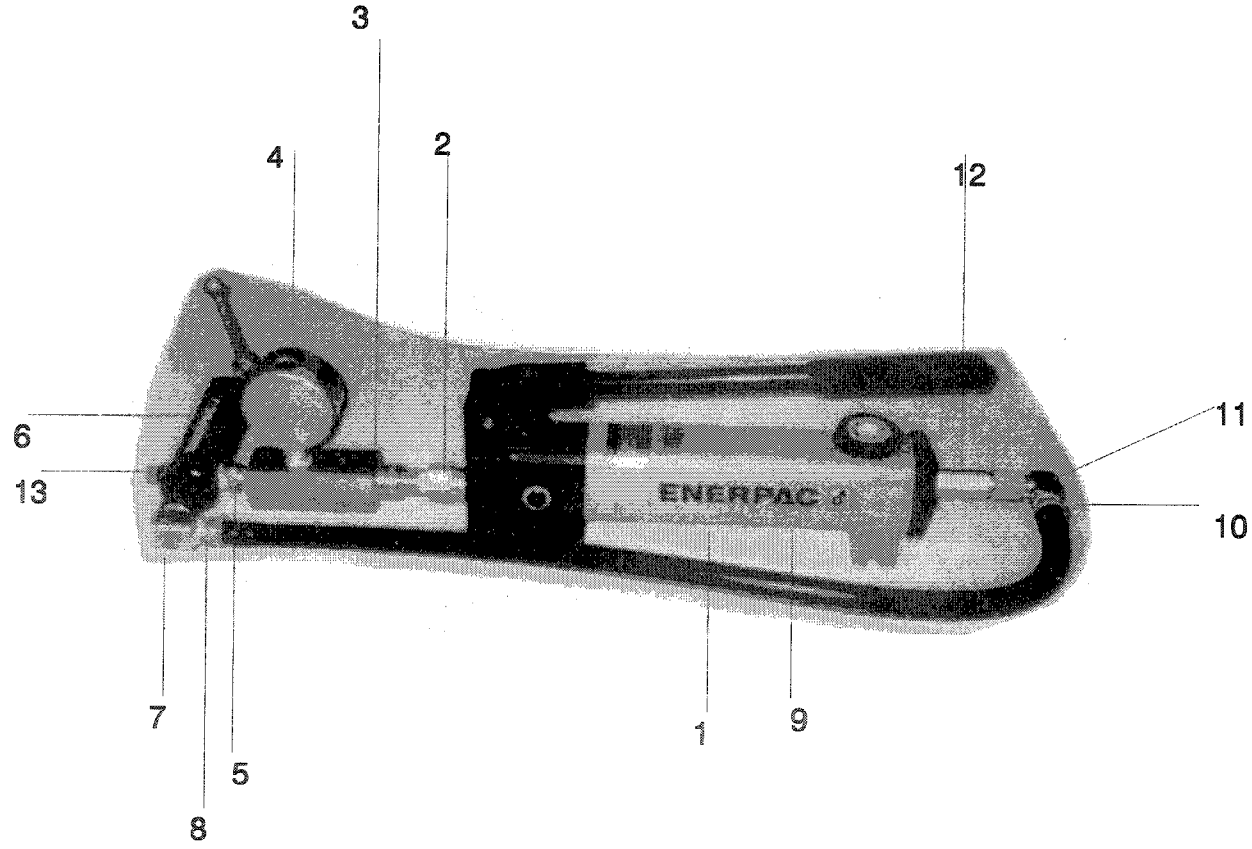

Hydraulic Hand Pump Assembly:

The parts required for the hand pump assembly are given in Table 2. Before anything is connected to the Enerpac P-141 hand pump, the tank return kit tie rod must be installed in the P-141 pump. This will require removing the hydraulic oil from the pump, removing the acorn nut on the end cap and removing the tie rod by unscrewing from the pump housing. Install the tie rod from the tank return with the slotted end thread protruding through the end cap. This will allow the hydraulic oil to return to the tank. When installing the fitting on the rod end (Item 12 on Figure 25), torque to 15-19 Ft. - Lb. Be sure to install the copper washer on the tie rod end before installing the fitting. Use a good grade pipe sealant that is compatible with hydraulic oil for all pipe thread joints.

Note: An alternative to Item 12 can be fabricated by using the adapter provided in the tank return kit (7/16" N.C. female x 7/16" NF female) and 1/4" NPT high pressure coupling. Weld the pipe coupling on the fine thread end of the adapter provided in the return kit. This will provide a 7/16" N.C. female to 1/4" NPT female fitting.

Table 2

Hand Pump Assembly Parts			
Item	**Description**	**Manufacturer/Part No.**	**Trane Part No.**
1	Hydraulic Pump with Tank Return Kit	ENERPAC P141 ENERPAC PC-20	PMP0666 ADP0368
2	Adaptor - 0.25 NPT Male x 0.375 NPT Female	ENERPAC FZ1055	ADP0369
3	Gauge Adaptor	ENERPAC GA3	GAG0154
4	Gauge - Hydraulic 10,000 PSI	ENERPAC 25-300	GAG0155
5	Connector - 0.375 NPT Male Straight	AEROQUIP 2083-6-6S	CONO480
6	Relief Valve	ENERPAC V-152	VAL4474
7	Elbow - 90° 0.375 NPT Male x 00.375 NPT Male	AEROQUIP 2089-6-6S	ELL0319
8	Hose Barb - Swival x 0.375 NPT Male	AEROQUIP FJ9068-0606S	FTG0135
9	Hose - Rubber 3/8" ID	Gates 6LOR 3/8" - Lockon	
10	Hose Barb - 0.25 NPT Male	AEROQUIP 4738-4-6B	FTG0136
11	Elbow - 90° 0.25 NPT Male x 0.25 NPT Female	AEROQUIP 2089-4-45	ELL0320
12	Coupler 0.25 NPT Female x 7/16" - N.C. Female		CPL0395
13	Outlet Port 0.375" NPT Female for Hydraulic Hose Conn.		

TRANE

General Service Bulletin

CVHE-SB-36

Library	**Service Literature**
Product Section	**Refrigeration**
Product	**Centrifugal Liquid Chillers**
Model	**CVHE/F/G**
Literature Type	**General Service Bulletin**
Sequence	**3A**
Date	**August 31, 1995**
File No.	**SV-RF-CTV-CVHE-SB-36-895**
Supersedes	

Literature History:
CVHE-SB-36 (8/95)–Original Issue of Bulletin.

Subject: CVHE/CVHF/CVHG Across the Line Starters

Introduction:

The starter module, 2U1, recently has had software changes which will require changes to existing starters if the module is replaced. The updated module is identified by part number MOD-259 or X13650453-07.

Background:

The starter module required software changes because the logic (software) could allow the transition resistors of Y-Delta starters to potentially overheat. The logic (software) was changed to better protect all types of starters. The only starter type that requires a wiring change is the Across-the-Line type with the above referenced module.

On previous versions of the starter module (ext -02 to -06), the logic of the module did not look for a contact closure at J4. This is reflected by the wiring shown in Figure 1.

The current module (ext-07) software requires a contact closure at J4 to signify transition. This required the additional pilot relay and contacts to be field wired to insure proper operation. Reference Figure 2 for the current recommendation for field supplied wiring of the starter module.

Since the Trane Company has a policy of continuous product improvement, it reserves the right to change specifications and design without notice. The installation and servicing of the equipment referred to in this booklet should be done by qualified, experienced technicians.

Figure 1
Previous Wiring for Across the Line Starters

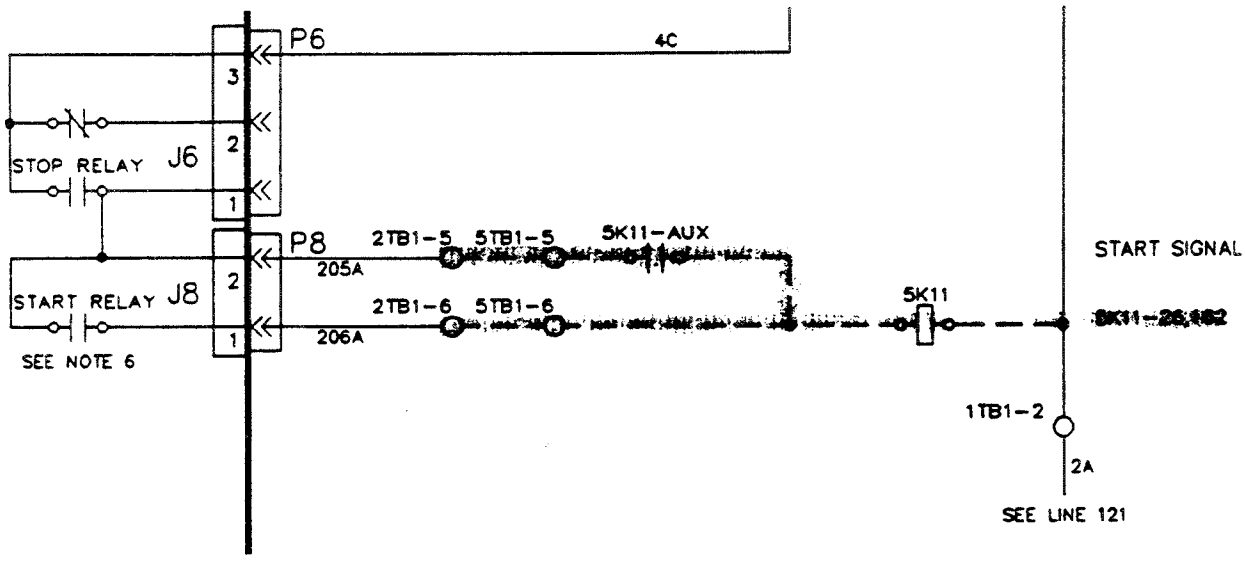

Figure 2
Shows Current Recommendations for Field Supplied Wiring of the Starter Module

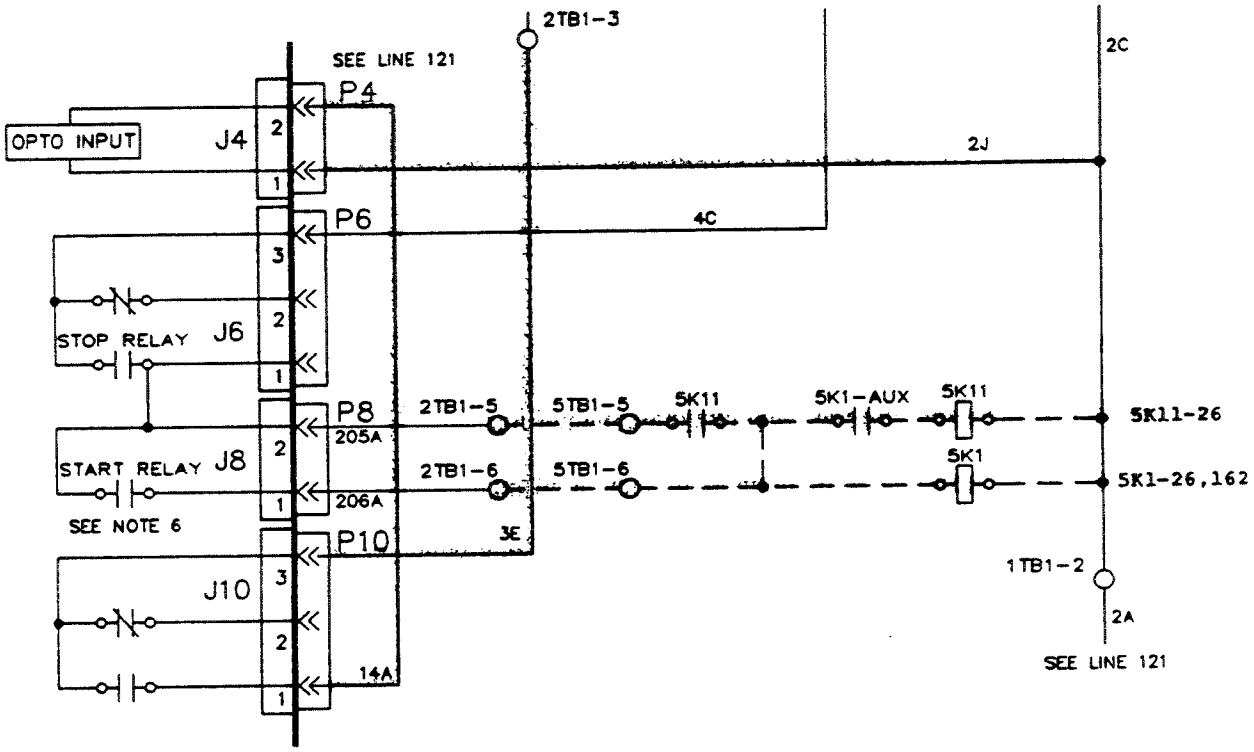

Required Action

1. Identify the type of starter you are changing the starter module, 2U1, on. **The wiring changes only are needed on <u>across the line starters</u>.**

2. If the existing starter module in the unit has a part number of X13650453-01 through -06 and you replace it with a module of X13650453-01 through -06, no further action is required.

3. However, if the starter module in the unit is X13650453-01 through -06 and you replace it with a X13650453-07 or higher, you need to complete the remainder of the service bulletin.

4. Secure the supply power and chiller disconnect switches open. Follow all applicable warnings and cautions for the starter and wiring.

5. With the power off, label and disconnect the terminal plugs from the module. Remove the old module.

6. Install the new module. Reconnect all existing connections that were removed. Check the connections for tightness. All connections should be tight, plugs should be snug fitting, and wiring leading up to the terminals should not be under any kind of tension.

Note: All field wiring must conform to NEC guidelines, as well as to any applicable state and local codes.

7. Add the wiring as shown in Figure 2. A wire must be added to jump from terminal 2 of J4 to terminal 1 of J10. A wire must be added from terminal 1 of J4 to transformer terminal 2T4-H4. A wire must be added from terminal 3 of J10 to 2TB1-3.

8. Aside from the changes made in this bulletin, it is always a good practice to inspect both the power and control wiring/connections of your starter, chiller, and field connections before power is applied. This includes, but is not limited to flow switches, temperature sensors, customer connections, etc.

TRANE

General Service Bulletin

CVHE-SB-37

Library	**Service Literature**
Product Section	**Refrigeration**
Product	**Centrifugal Liquid Chillers**
Model	**CVHE/F/G**
Literature Type	**General Service Bulletin**
Sequence	**37**
Date	**February 12, 1996**
File No.	**SV-RF-CTV-CVHE-SB-37-196**
Supersedes	**NEW**

Literature History:
CVHE-SB-37 - Original issue of bulletin, February 1996.

Water-Cooled, Hermetic CenTraVac® Models CVHE/CVHF/CVHG Units

Subject: In-Warranty UCP2 Return Module Checklist

Introduction:

This is an informational service bulletin only. No Labor or Material authorized. This bulletin provides instructions that must be followed when returning all UCP2 modules in the future.

Discusssion:

Effective **February 1, 1996**, all failed **"In-Warranty" UCP2 modules** must be returned with the appropriate paperwork (**"In-Warranty" UCP2 Module Return Checklist**). A blank copy of the form will be shipped to you in the box along with the replacement module.

Important:

This form must accompany the returned module and must be filled out properly or the claim will not be processed. Place in the box with the module that will be sent back to Trane. It is not necessary to stock this form in your office, however a copy is printed as part of this service bulletin for your information.

© American Standard Inc. 1996

Since the Trane Company has a policy of continuous product improvement, it reserves the right to change specifications and design without notice. The installation and servicing of the equipment referred to in this booklet should be done by qualified, experienced technicians.

TRANE

General Service Bulletin

CVHE-SB-39

Library	**Service Literature**
Product Section	**Refrigeration**
Product	**Centrifugal Liquid Chillers**
Model	**CVHE, CVHF, CVHG**
Literature Type	**General Service Bulletin**
Sequence	**39**
Date	**October 25, 1996**
File No.	**SV-RF-CTV-CVHE-SB-39**
Supersedes	

Literature History: CVHE-SB-39 - Original issue of bulletin - October 1996

Subject: Lubrication of First Stage Inlet Guide Vane Tang Operator O-Rings on CVHE/CVHF/CVHG Units

Introduction:

This is an informational service bulletin only.

The purpose of this general service bulletin is to describe the proper procedure for lubrication of the first stage IGV tang operator o-rings for CVHE, CVHF and CVHG units.

Discussion:

The first stage IGV tang operator uses dual o-rings to seal to atmosphere. A small pipe plug is provided in the body of the operator to allow manual lubrication of these o-rings. On an annual basis, remove the pipe plug and fill the cavity with Trane OIL-22. This will provide adequate lubrication to the o-rings.

Note: Be sure and reinstall the pipe plug when the lubrication has been completed.

©American Standard Inc. 1996

Since the Trane Company has a policy of continuous product improvement, it reserves the right to change specifications and design without notice. The installation and servicing of the equipment referred to in this booklet should be done by qualified, experienced technicians.

Corrective Action:

No corrective action required per this service bulletin.

Parts Order Information:

No parts need to be ordered per this service bulletin.

Production Changes:

This procedure does not affect current production.

TRANE

Service Bulletin

CVHE-SB-41

Library	**Service Literature**
Product Section	**Refrigeration**
Product	**Centrifugal Liquid Chillers**
Model	**CVHE/F/G**
Literature Type	**General Service Bulletin**
Sequence	**41**
Date	**May 1, 1997**
File No.	**SV-RF-CTV-CVHE-SB-41-597**
Supersedes	**New**

Subject: CVHE/F/G Rupture Disc Installation Procedure

Introduction:

This service bulletin describes the proper procedure to follow when changing or installing a rupture disc on a CVHE/F/G CenTraVac®.

Discussion:

In order to prevent premature failure of the carbon rupture disc used on low pressure centrifugal chillers, it is imperative to follow the proper rupture disc installation procedure. The disc must be oriented in the proper direction, centered in the clamping flanges with gaskets located on both sides of the disc, and the bolts tightened gradually to specified torque value. (See Figures 1 and Figure 2). No spacers should be used between the flanges. Two methods of bolt retention are used. The first method (Figure 1) utilizes a nut and shows a non-threaded flange (used prior to 1997). The second method (Figure 2) uses a tapped threaded flange (starting about 1997).

Recommended Action:

When installing a new rupture disc, make sure the discs' smooth flat face is positioned toward the "outside" pipe assembly, as shown in Figure 1 or Figure 2. While the bolts are loose, position the disc and rubber gaskets so that their outside diameter is approximately the same distance from each of the four retaining bolts. This will give a good concentric orientation. While in this position, tighten the bolts by hand to prevent the disc and gaskets from moving. Using a torque wrench set to **20 ft-lbs.** Gradually tighten each bolt, using an alternating sequence of opposite bolts until the final torque is reached. Be sure to tighten gradually in a series of steps and not all at once. This will allow the disc to be clamped uniformly.

Since the Trane Company has a policy of continuous product improvement, it reserves the right to change specifications and design without notice. The installation and servicing of the equipment referred to in this booklet should be done by qualified, experienced technicians.

ØAmerican Standard Inc. 1997

Figure 1
Cross Section of Rupture Disc with
Non-Threaded Flange

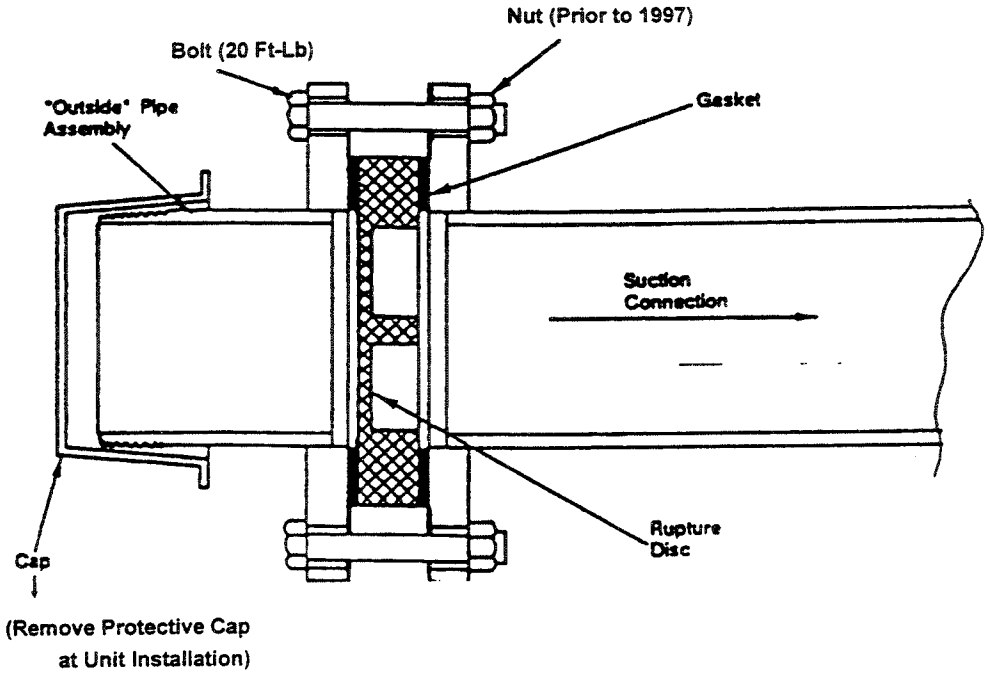

Figure 2
Cross Section of Rupture Disc with
Threaded Flange

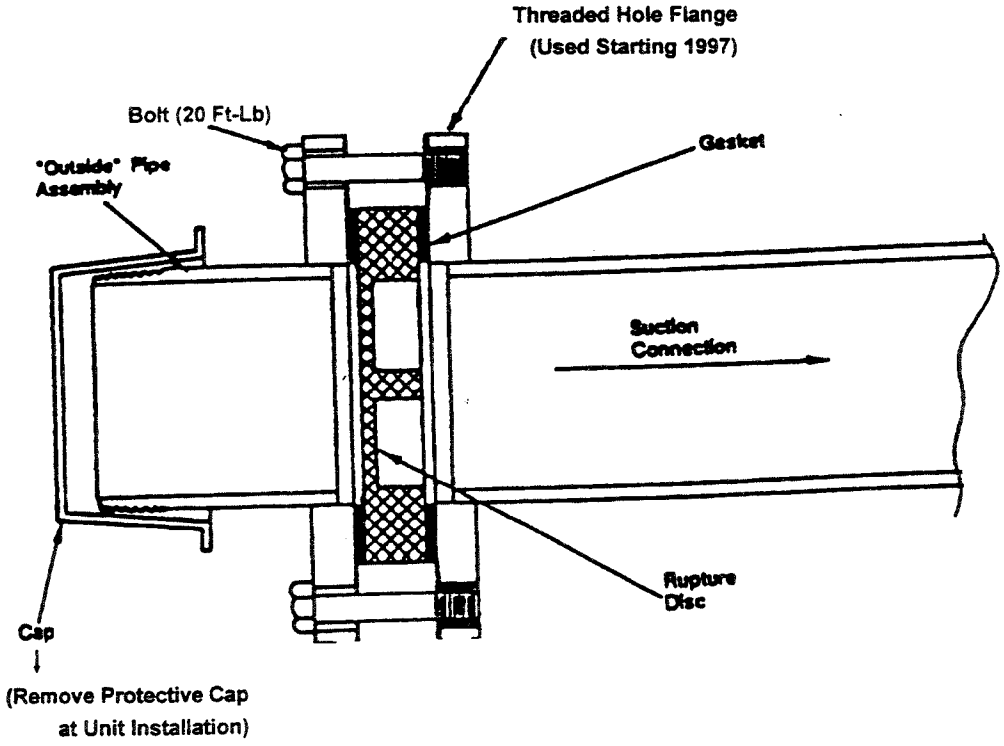

TRANE

Confidential Service Bulletin

CVHE-CSB-42

Library	Service Literature
Product Section	Refrigeration
Product	Centrifugal Liquid Chillers
Model	CVHE/F/G
Literature Type	Confidential Service Bulletin
Sequence	42
Date	February 27, 1998
File No.	

Subject: Software Change to Upgrade the Lubrication Protection System

Introduction:

The purpose of this bulletin is to advise Trane Service Companies of a MANDATORY RETROFIT to existing field CVHE/CVHF UCP2 chillers with software which upgrades the lubrication protection system with the latest features of the Circuit module. Each Service Manager will receive a letter and a list of units in their territory along with a copy of the confidential service bulletin.

Units Affected:

All domestic CVHE/CVHF units with UCP2 Control Panel manufactured between August 1993 and December 1996 or any centrifugal unit retrofitted with a UCP2 Control Panel before 1997.

Discussion:

Circuit module software which enhances the oil protection system for UCP2 chillers is now being used in production. This enhanced protection includes the following features:

1) Positive oil pressure trip point at 2/3 of minimum oil pressure set point. (Minimum oil pressure set point is 9 PSID)

2) Increase pre-lube time to 60 seconds from 30 seconds.

3) Increase post lube time to 3 minutes from 2 minutes.

4) Faster software filter on the oil pressure linearized values to improve response to sudden changes in oil pressure.

Since the Trane Company has a policy of continuous product improvement, it reserves the right to change specifications and design without notice. The installation and servicing of the equipment referred to in this booklet should be done by qualified, experienced technicians.

©American Standard Inc. 1998

TRANE

Confidential Service Bulletin

CVHE-CSB-43

Library	Service Literature
Product Section	Refrigeration
Product	Centrifugal Liquid Chillers
Model	CVHE/F/G
Literature Type	Confidential Service Bulletin
Sequence	43
Date	September 24, 1997
File No.	New

SUBJECT: MOTOR TERMINAL BOX SWEATING

INTRODUCTION:

The purpose of this bulletin is to provide information on CVHE/CVHF/CVHG motor terminal boxes that may experience condensation of moisture inside the motor terminal box. THIS IS A FIX ON FAIL RETROFIT.

BACKGROUND:

Under certain unit operating and ambient conditions, units built after 1990 that have remote mounted starters may experience condensation of moisture inside the motor terminal box. Units with unit mounted starters are not affected. Moisture inside the motor terminal box may cause an electrical short to ground.

LABOR AND TRAVEL AUTHORIZATION:

This service bulletin authorizes 3.0 man-hours on affected units to make the necessary changes and 1.0 man-hours travel per unit. ALL CLAIMS MUST BE SUBMITTED ON THE "SERVICE WARRANTY SALES ALLOWANCE CLAIM" FORM 1-30.09-2 WITHIN 30 DAYS OF THE REPAIR.

MATERIAL AUTHORIZATION:

This service bulletin authorizes the following:

A. Order from Trane Parts;
1. Qty. 1 RES-00334, Heater with mounting hardware. 22.03
2. Qty. 1 LBL-00129, Label 1.73

B. Local Purchase; 14ga
1. Wire, electrical, ~~16ga.~~, insulated, copper stranded, 500-inches maximum.
2. Conduit, 240 inches maximum and fittings.
3. Insulation, 3/4-inch thick , closed cell neoprene, 4-feet X 5-feet (or 4-feet x 8-feet, see Item 14 of Required Action).
4. Tie wraps and electrical connections as required.

Since the Trane Company has a policy of continuous product improvement, it reserves the right to change specifications and design without notice. The installation and servicing of the equipment referred to in this booklet should be done by qualified, experienced technicians.

©American Standard Inc. 1997

MATERIAL DISPOSITION:

There are no materials to dispose.

UNITS AFFECTED:

CVHE/CVHF/CVHG units with remote mounted starters (including Starters by Others) that shipped between January 1990 thru August 1997 that are operating in equipment rooms where the dewpoint in the equipment room exceeds 70 degree F (21.1 degrees C) and the motor cooling refrigerant is less than 60 degrees F (15.6 degrees C) can produce condensing moisture inside the motor terminal box. If condensing moisture is observed on the EXTERNAL SURFACE OF THE MOTOR TERMINAL HOUSING FLANGE, the INSIDE OF THE MOTOR TERMINAL BOX must be examined for the presence of condensing moisture.

⚠ WARNING
HAZARDOUS VOLTAGE! DISCONNECT ALL ELECTRIC POWER INCLUDING REMOTE DISCONNECTS BEFORE SERVICING OR BEFORE OPENING MOTOR TERMINAL BOX.

REQUIRED ACTION:

Note: If the motor terminal box has been inverted with the motor leads entering through the bottom, proceed with the Required Action but mount the heater in the top of the box.

1. Determine and verify that moisture is condensing inside the motor terminal box prior to proceeding with the FIX ON FAIL modifications listed below.
2. Obtain all materials listed in MATERIALS AUTHORIZATION above.
3. Secure the supply power and open the disconnect switch prior to opening the motor terminal box.
4. Drill hole in left side of box for punch and use punch to make hole for connector. (See Figure 1.)
5. Drill two holes so that heater will be centered in box and 3-inches from front. (See Figure 1.)
6. Remove all metal shavings from inside box.
7. Mount 90 degree connector to box. (See Figure 1.)
8. Install conduit to motor junction box and control panel.
9. Insulate the outside of the motor housing flange with the 3/4 inch insulation.

10. Apply first piece of insulation to back of box. (See Figure 2.)

11. Apply second piece of insulation to back; try to center connectors in holes. (See Figure 2.)

12. Attach insulation to right side of box. (See Figure 2.)

13. Attach insulation to left side of box after cutting hole for connector. (See Figure 2.)

14. If unit was provided with "double thickness" insulation for high humidity or Ice Storage, the outside of the motor terminal box must also be insulated. Obtain extra insulation and insulate the outside of the motor terminal box. Do not insulate the cover.

15. Mount and bolt heater to box with terminals facing forward. (See Figure 3.)

16. Install last piece of insulation around heater. (See Figure 3.)

17. Run conduit wires (9D and 2Z) to terminals and attach connectors.

18. Wire inside of control panel as shown in Figure 4.

19. Set conduit up to conduit bundle and ty-wrap to oil discharge line. (See Figure 4.)

20. Verify wiring is correct. (Also refer to Junction Box Wiring drawing, 2307-5175.)

21. Do not insulate Motor Terminal Box Cover, replace cover and attach label LBL-00129 to outside of the cover.

Note: After insulation is applied, apply firm pressure (preferably with a rolling tool) to 100% of the surface to ensure all air pockets are removed.

EXPIRATION DATE:

The effective cut-off date is March 31, 1998.

Figure 1
Drilling Instructions per Items 4 - 8

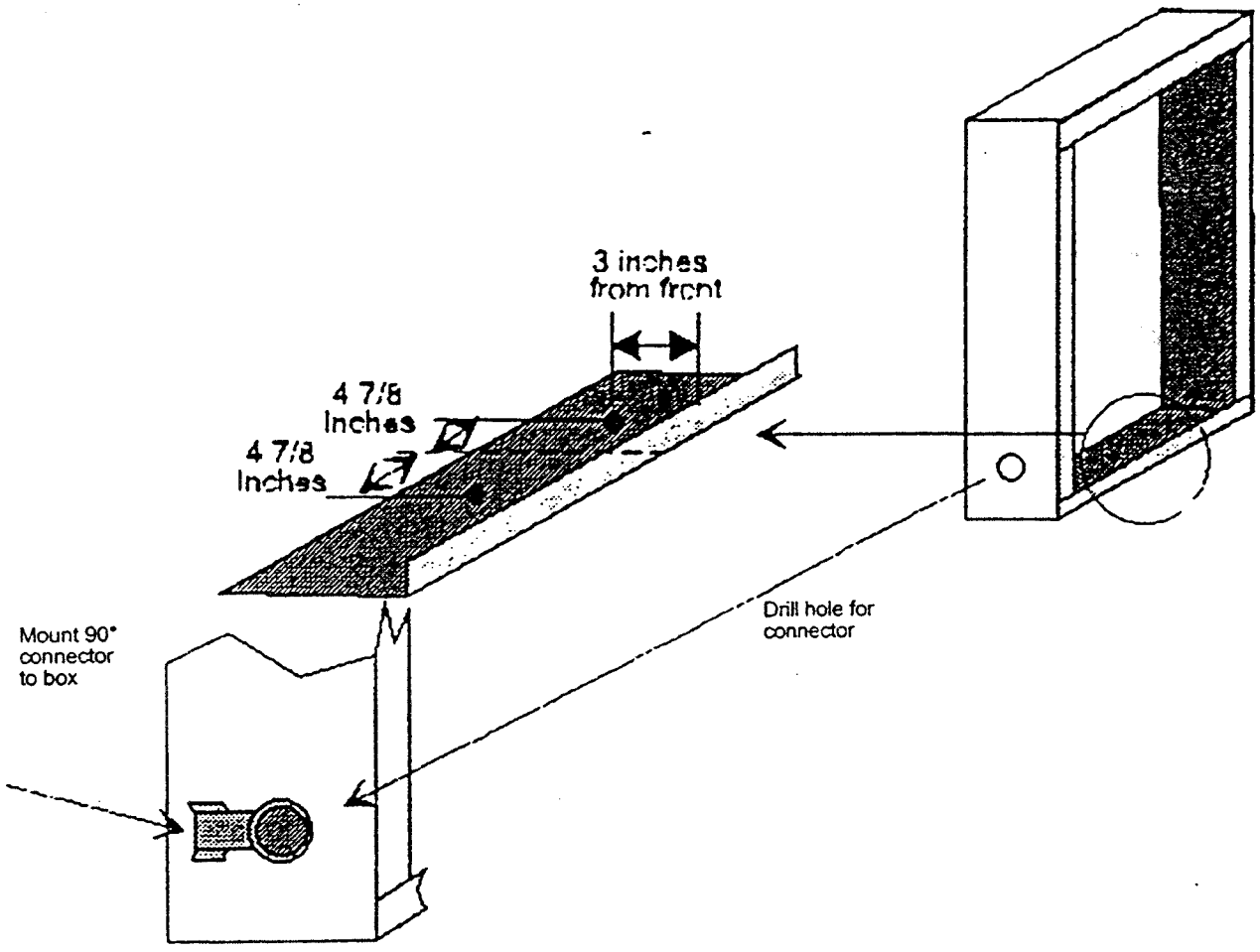

Figure 2
Insulation Instructions per Items 10 - 13

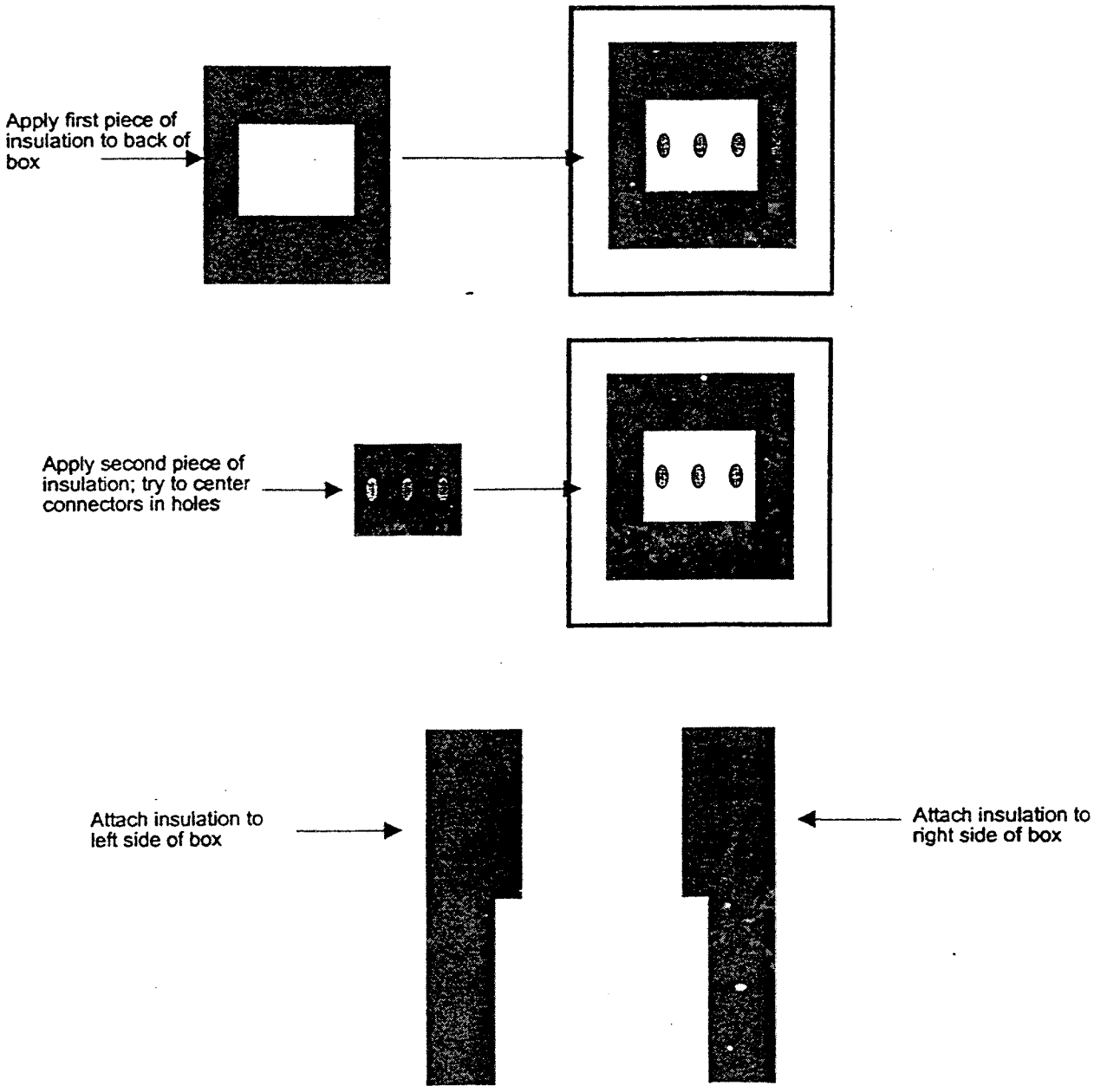

Note: Proper adhesion of insulation is important, clean all surfaces prior to installation of insulation, and roll or press all insulation surfaces to assure total surface and adhesion.

Figure 3
Instructions per Items 15 - 16

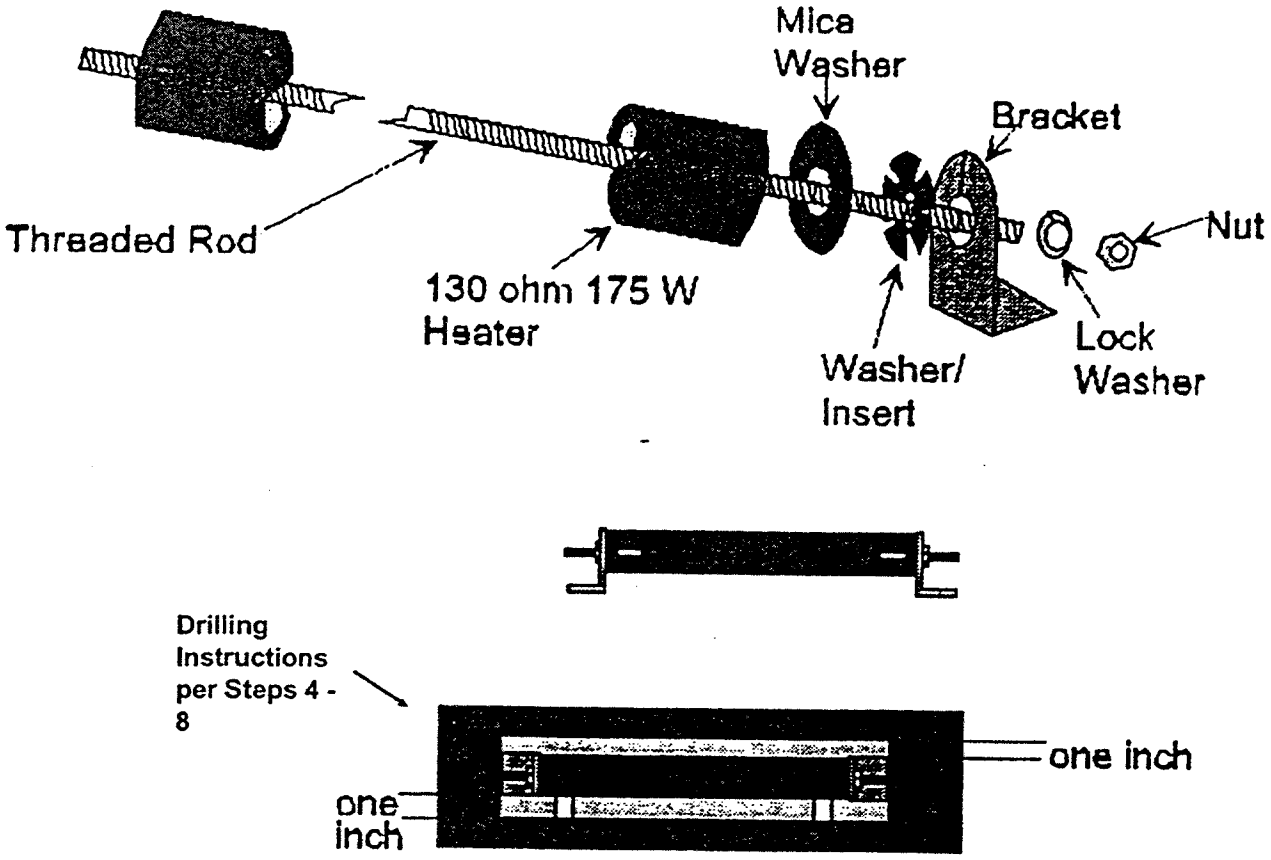

Figure 4
Instructions per Items 17 - 20

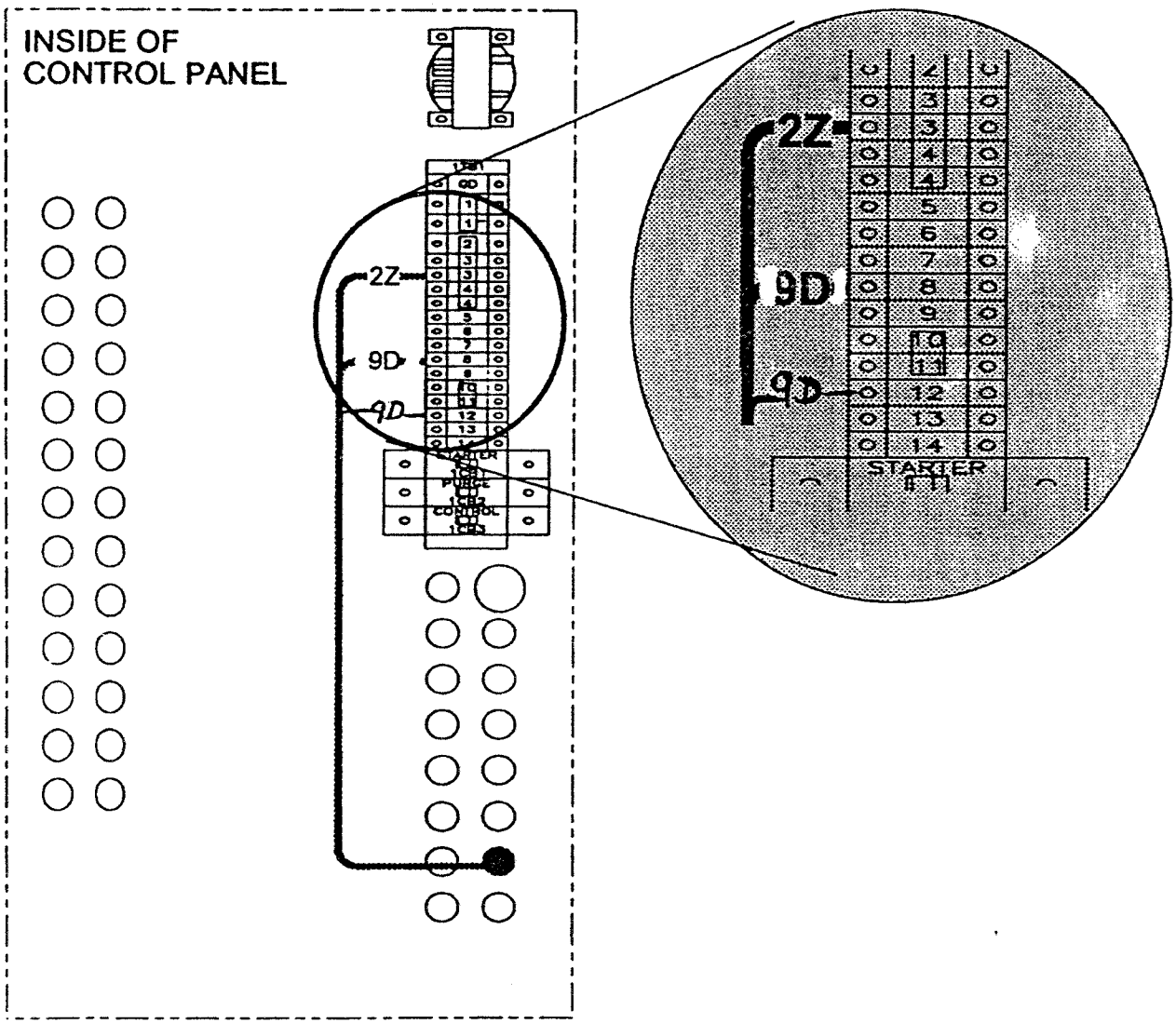

Wiring Drawing -
2307-5175

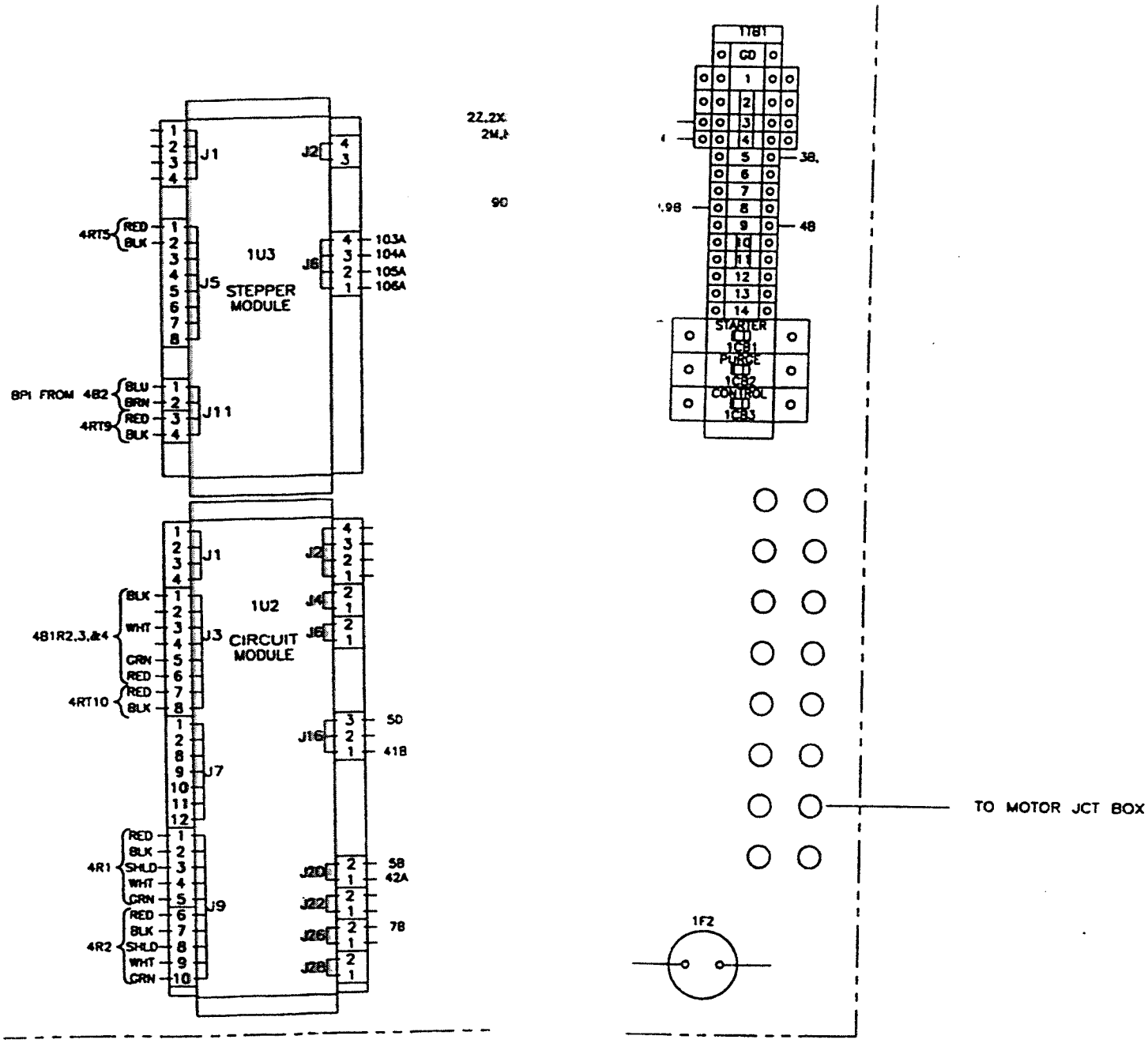

Wiring Drawing -
2307-5175

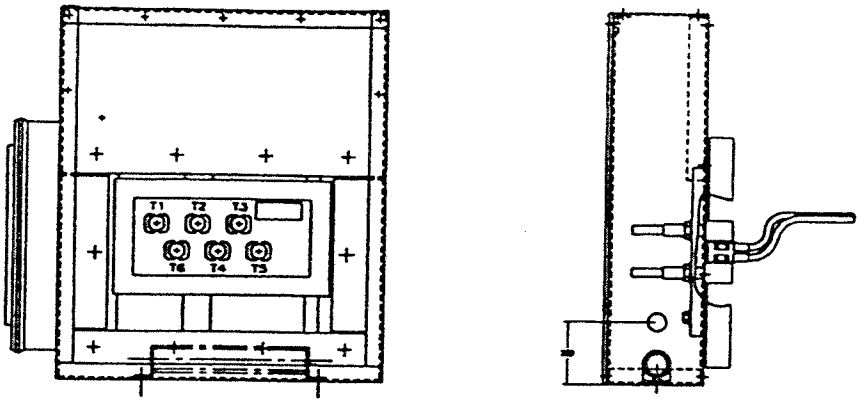

DETAIL "A"

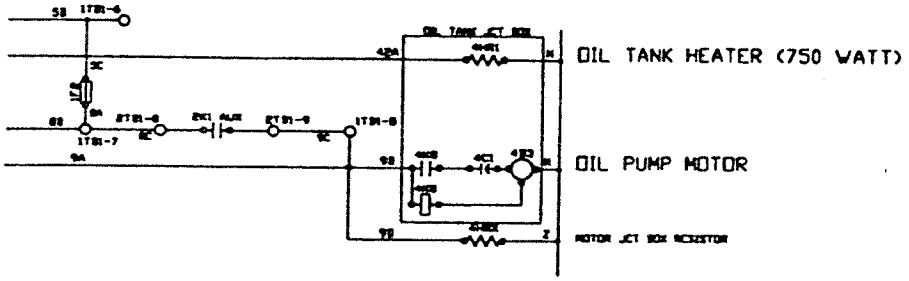

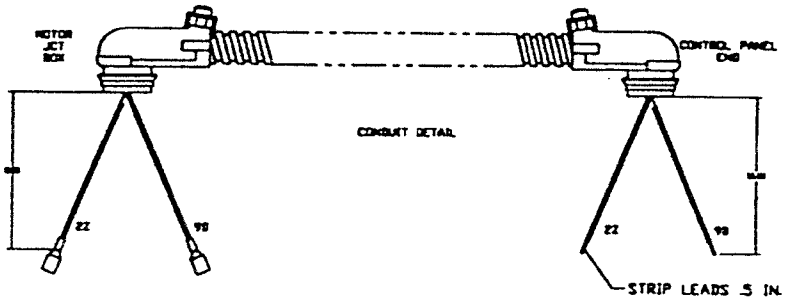

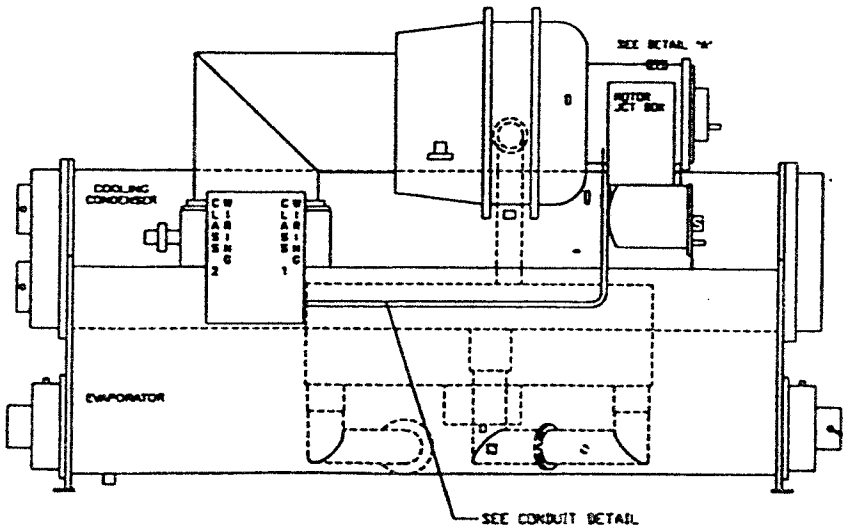

TRANE

General Service Bulletin

CVHE-SB-44

Library	Service Literature
Product Section	Refrigeration
Product	Centrifugal Liquid Chillers
Model	CVHE/F/G
Literature Type	General Service Bulletin
Sequence	44
Date	October 29, 1997
File No.	NEW

Subject: Solid State Starter Logic Module (2U2) Failures

Introduction:

The purpose of this bulletin is to provide troubleshooting and replacement information on the solid state starters used on the CVHE/CVHF/CVHG units.

IMPORTANT!
TO PREVENT INJURY OR DEATH DUE TO ELECTRICAL SHOCK, PLEASE FOLLOW THE WARNINGS PROVIDED THROUGHOUT THIS MANUAL REGARDING HAZARDOUS VOLTAGE WHEN SERVICING.

Discussion:

The Trane solid state starter is designed to start the chiller motor smoothly at a reduced torque and current. A complete starter consists of a 2U1 starter module, a 2U2 solid state controller, MOV (Metal Oxide Varistor) transient suppressers, and a 3-pole, 6 SCR, full wave power section all mounted in a common panel. All of the regulating, gating and logic functions are contained in the 2U2 logic module.

The original 2U2 logic module has an internal bridge rectifier that is undersized. This undersized component can fail and cause mis-firing of the gates leading to poor ramp-up of the motor. Follow the procedures below to troubleshoot the starter. The procedure will work on any version of logic module.

Corrective Action:

Several procedures are listed below to assist in determining which component in the starter has failed.

Since the Trane Company has a policy of continuous product improvement, it reserves the right to change specifications and design without notice. The installation and servicing of the equipment referred to in this booklet should be done by qualified, experienced technicians.

©American Standard Inc. 1997

Logic Module (2U2) Control Settings and Adjustments

The 2U2 Logic module has three adjustable potentiometers.

⚠ WARNING
HAZARDOUS VOLTAGE
DISCONNECT ALL ELECTRIC POWER INCLUDING REMOTE DISCONNECTS BEFORE SERVICING.
Failure to disconnect power before servicing can cause severe personal injury or death.

Refer to Figure 1.

1. Starting Current - Factory Set @ 100% (full counter clockwise).
2. Current Limit - Factory Set @ 300%
3. Ramp Time - Factory Set @ 5 to 6 seconds.

The 2U2 Logic module also has three unused potentiometers.

The solid state starter is designed to provide adequate ramp-up current as necessary within five seconds to accelerate the motor. After the compressor is up to speed, the 2U2 logic module will close an internal set of contacts called "end of limit". When the "end of limit" contacts are closed, the compressor will be sent across the line by closing the by-pass contacts.

Initial Check-Out Procedures

[ ] Confirm all control voltage is separate from the power wiring.
[ ] Confirm all wiring is landed correctly.
[ ] Tighten all connections.
[ ] Inspect all components for damage by inspecting the starter for arcing, overheating, and other damage.

Fuse Check-Out

WARNING
TO PREVENT INJURY OR DEATH DUE TO ELECTRICAL SHOCK OR CONTACT WITH MOVING ⚠ PARTS,
use care when measurements, adjustments, or other service-related operations are performed with power on.

Four fuses can be replaced if necessary. The fuses that need to be checked are:

[ ] **2F1**: Each end to chassis ground should be ±10% of incoming voltage.
[ ] **2F2**: Each end to chassis ground should be ±10% of incoming voltage.
[ ] **2F3**: Each end to chassis ground should be ±10% of incoming voltage.
[ ] **2F4**: Each end to chassis ground should be 115 VAC ±10%.

Figure 1
Adjustable Potentiometers on 2U2 Module

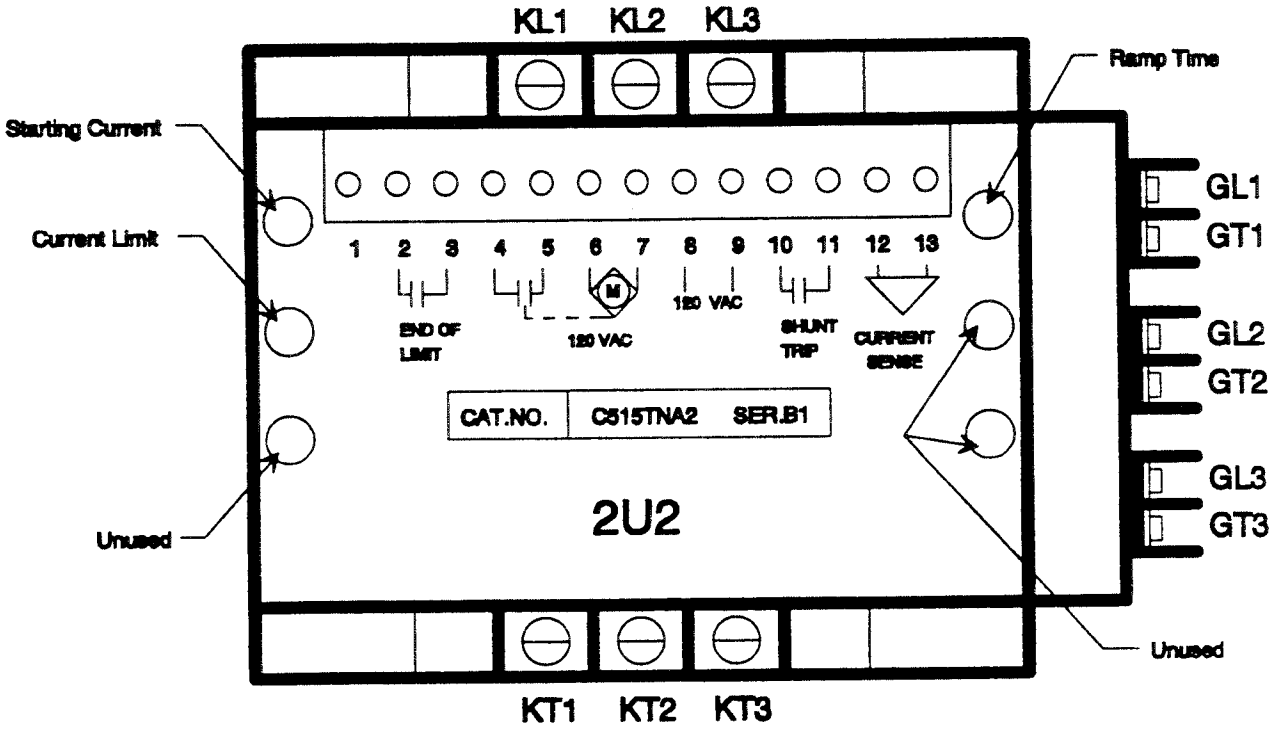

Current Feedback Resistor (CFR) Check-Out

⚠ WARNING
HAZARDOUS VOLTAGE
DISCONNECT ALL ELECTRIC POWER INCLUDING REMOTE DISCONNECTS BEFORE SERVICING.
Failure to disconnect power before servicing can cause severe personal injury or death.

Refer to the four selection tables in the chiller drawing package that shipped with the unit (schematic 260352) to confirm that the correct current feedback resistor (CFR) is installed. If the correct resistor is installed, use the tables to determine the proper resistance setting for the CFR. Use the following steps to confirm that the CFR is set for the proper resistance value.

1. Disconnect the resistor from terminals 2TB5-32 and 33.
2. Place an ohmmeter across the resistor and record the value.
3. Refer to the applicable table in schematic 260352 to determined the correct resistance value.
4. If steps 2 and 3 do not correspond, use a small set screw on the resistor to adjust the resistance value.
5. With the correct resistance value set, re-install the resistor.

For example (using schematic 260352):

Starter model number (off starter nameplate):
CVSF238********
FLA for tables (use unit RLA found on nameplate) = 238

1. Go to tables on schematic to determine proper resistor.
2. Second table (labeled VC36ELJ) #2 shows proper resistor for the 238 RLA is C515P48.
3. If proper resistor is used, use same table to read resistance value of resistor. This CFR would be set at 850 ohms.

Power Pole Check-Out

⚠ WARNING
HAZARDOUS VOLTAGE
DISCONNECT ALL ELECTRIC POWER INCLUDING REMOTE DISCONNECTS BEFORE SERVICING.
Failure to disconnect power before servicing can cause severe personal injury or death.

The entire power pole must be replaced if one or more of the internal components fails the check-out procedures.

See Figure 3 for a typical Power Pole schematic for the following measurements.

1. Measure the resistance values across the terminals listed in Table 1.

   Note: It is not abnormal for two of the measurements in Table 1 to be closer together in values than the third measurement.

2. If any of the values fall outside of the range replace the power pole.

3. If the resistances are acceptable, measure the resistance values listed in Table 2 and record.

Table 1
Power Pole Resistance with Wire Leads Connected

Terminal Points on Power Poles	Resistance Value (Ohms)
KL1 to KT1	>10 K ohms
KL2 to KT2	>10 K ohms
KL3 to KT3	>10 K ohms

Table 2
Power Pole Resistance with Wire Leads Connected

Terminal Points on Power Poles		Resistance Value (Ohms)
KT1 to GT1	KL1 to GL1	5-100 ohms
KT2 to GT2	KL2 to GL2	5-100 ohms
KT3 to GT3	KL3 to GL3	5-100 ohms

Figure 3
Typical Power Pole Schematic

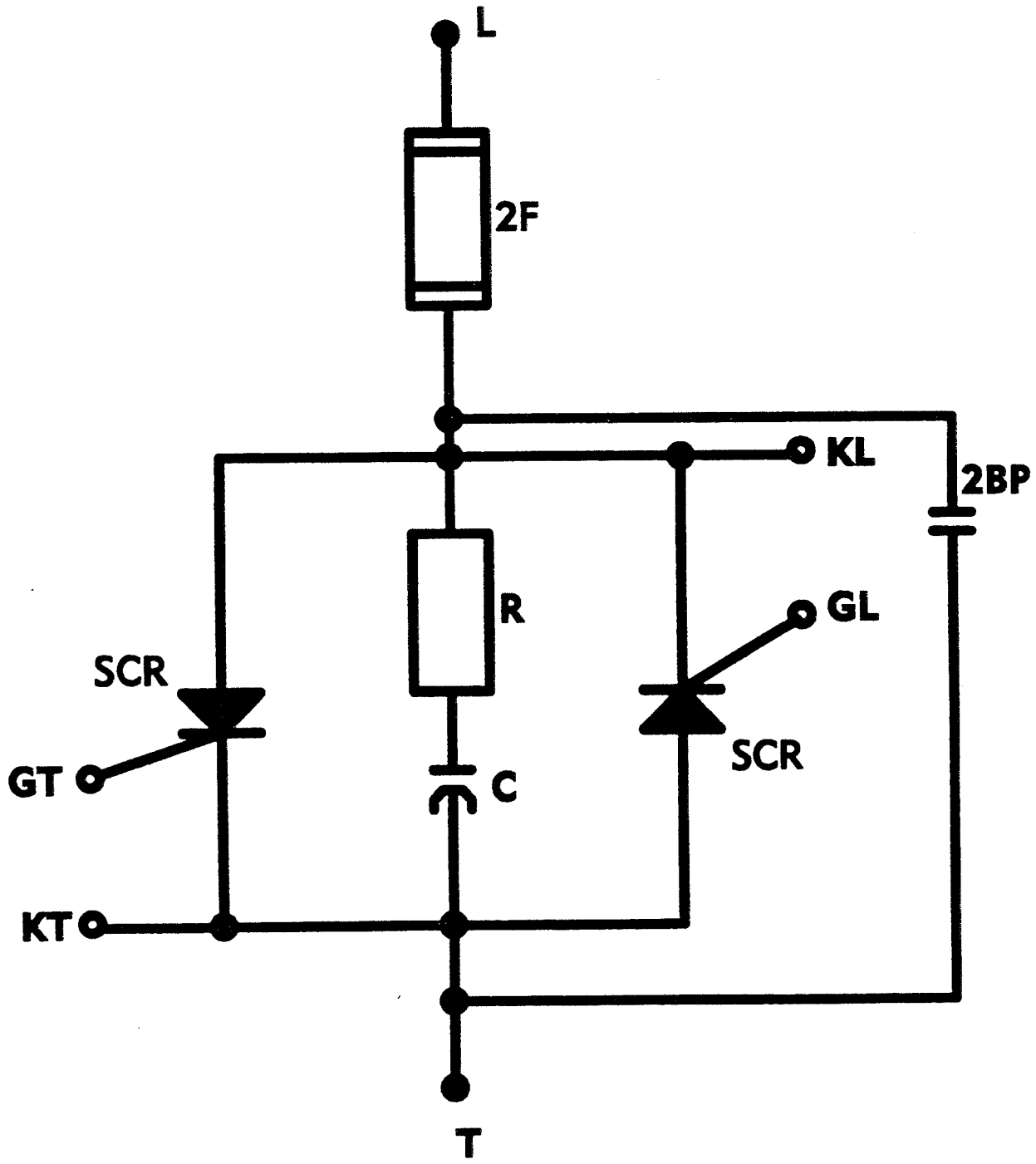

4. If any of the values fall out side of the range, replace the power pole.

5. If the resistances fall within the range, ensure that the starter is connected to the motor and proceed with Step 6.

⚠ WARNING
TO PREVENT INJURY OR DEATH DUE TO ELECTRICAL SHOCK OR CONTACT WITH MOVING PARTS, use care when measurements, adjustments, or other service-related operations are performed with power on.

6. Apply power to the unit but do NOT let the compressor start. Make sure the CLD shows an operating mode of "STOP".

7. Measure and record the following voltages:

   [ ] KL1 to KT1
   [ ] KL2 to KT2
   [ ] KL3 to KT3

The measured voltage must be 0.58 times the incoming line voltage.

For example: Units with 480 VAC line to line voltage will have 278 VAC ± 5% measured between the points listed in Step 7.

8. If the voltage readings in Step 7 are out of range, replace the power pole and retest.

9. If the power poles pass the above check-out proceed with the next section.

Power Pole Fan Check-Out

⚠ WARNING
HAZARDOUS VOLTAGE
DISCONNECT ALL ELECTRIC POWER INCLUDING REMOTE DISCONNECTS BEFORE SERVICING.
Failure to disconnect power before servicing can cause severe personal injury or death.

Fans are used on the power poles to keep the components from overheating. Confirm that the fans are operating and that the rotation of the fans is correct.

1. The 2TR1 time delay relay will close at start-up and should pull air up from the bottom of the cabinet through the power poles.

2. The 2TR1 time delay relay will allow the fans to operate 15 minutes after shutdown.

Control Power Check-Out

⚠ WARNING
HAZARDOUS VOLTAGE
DISCONNECT ALL ELECTRIC POWER INCLUDING REMOTE DISCONNECTS BEFORE SERVICING.
Failure to disconnect power before servicing can cause severe personal injury or death.

The logic module (2U2) uses 120 VAC supplied by the 2T4 transformer. Check the control power by performing the following steps:

1. Measure the voltage across 2TB1-1 and 2TB1-3. The voltage must be 120 VAC ± 10%.
2. If the voltage falls out of range, check the 2F4 fuse and the 2T5 transformer.
3. If the voltage falls within range, measure the voltage between 2TB1-5 and 2TB1-3. The voltage must be 120 VAC ± 10%.
4. If the voltage falls out of range, check the connection and operation of the high pressure cutout switch.
5. If the voltage falls within range, check the 24 VAC control power by measuring the voltage between J2-1 and J2-2 on the 2U1.
6. If the voltage is out of range, check the 2T4 transformer.
7. If the voltages are within range, go to the next section.

Logic Module Shunt Trip Check-Out

1. The Power Pole Check-Out procedure on page 4 must be conducted prior to the following tests.

⚠ WARNING
TO PREVENT INJURY OR DEATH DUE TO ELECTRICAL SHOCK OR CONTACT WITH MOVING PARTS, use care when measurements, adjustments, or other service-related operations are performed with power on.

Apply power to the starter but do NOT allow the compressor to start. If the breaker opens immediately, the internal shunt trip of the logic module (2U2) has been activated. To check the shunt trip follow the procedures below:

2. With the Starter Line Circuit Breaker open, remove the 2U1-J16 plug and isolate it. This will disable the shunt trip coil.

3. Reset and close the breaker.

4. Test the output of the logic module (2U2) between pins 10 and 11. This internal shunt trip is a dry contact closure that closes on application of power and opens on a fault.

5. If the shunt trip does not initially close, reconfirm that the power poles are operating properly. If the power poles pass the check-out procedures, replace the logic module (2U2).

6. If the shunt trip is closed, but the UCP2 is displaying a "Solid State Starter - Fault Relay Open", check the 2U1 starter module and the interconnecting wiring.

Logic Module (2U2) Check-Out

⚠ WARNING
HAZARDOUS VOLTAGE
DISCONNECT ALL ELECTRIC POWER INCLUDING REMOTE DISCONNECTS BEFORE SERVICING.
Failure to disconnect power before servicing can cause severe personal injury or death.

Disconnect all power from the unit and perform the following steps.

1. Disconnect the leads from GL1, GL2, GL3, GT1, GT2, GT3, KL1, KL2, KL3, KT1, KT2, and KT3 at the 2U2 Logic module.

2. Measure the resistance between KL1 to GL1, KL2 to GL2, and KL3 to GL3 at the 2U2 Logic module. The resistance must be 1000 ohms æ 10 ohms.

3. Measure the resistance between KT1 to GT1, KT2 to GT2, and KT3 to GT3 at the 2U2 Logic module. The resistance must be 1000 ohms ± 10%.

4. If any of the resistances are out of range, replace the 2U2 logic module.

⚠ WARNING
A PORTION OF THE FOLLOWING PROCEDURE IS DONE WITH POWER APPLIED TO UNIT.
TO PREVENT INJURY OR DEATH DUE TO ELECTRICAL SHOCK OR CONTACT WITH MOVING PARTS , Use Care When Measurements, Adjustments, Or Other Service-related operations Are Performed With Power On.

5. If the resistances are correct, reconnect the leads that were removed in Step 1 and proceed with the Starting Sequence Check-out.

Starting Sequence Check-Out

⚠ WARNING
HAZARDOUS VOLTAGE
DISCONNECT ALL ELECTRIC POWER INCLUDING REMOTE DISCONNECTS BEFORE SERVICING.
Failure to disconnect power before servicing can cause severe personal injury or death.

If the compressor is not rotating after a start signal, follow the procedures below to confirm that the 2U2 and 2U1 modules are functioning properly.

1. Check phase rotation, it must be A-B-C. Improper wiring sequence to L1, L2 and L3 will cause the shunt trip to fault. Improper wiring to the 2U2 can also cause the shunt trip to fault.

2. Meg the compressor motor and confirm that the problem is not in the motor.

⚠ WARNING
A PORTION OF THE FOLLOWING PROCEDURE IS DONE WITH POWER APPLIED TO UNIT. TO PREVENT INJURY OR DEATH DUE TO ELECTRICAL SHOCK OR CONTACT WITH MOVING PARTS , Use Care When Measurements, Adjustments, Or Other Service-related operations Are Performed With Power On

3. Close the disconnect and initiate the chiller through a starting sequence.

4. Measure the voltage across the 2T5 transformer and the 2F4 fuse. Place the voltmeter across 2TB1-1 and 2TB1-3, the power supply is 120 VAC ± 10%.

5. If no voltage is measured, check the fuse and the 2T5 transformer. If power is present, measure the voltage across 2TB1-3 and 2U2 pin 8. The voltage is 120 VAC ± 10%.

6. If no voltage is present, check the operation and connections of the HPC switch and the interconnecting wiring.

7. Also check the voltage across 2TB1-3 and 2U2 pin 2 for 120 VAC ± 10%. If it is not present check wiring and connections between the transformer and the module.

8. Measure the voltage from 2U2 pin 7 to ground for 120 VAC ± 10%. If voltage is present, the heatsink motor temperature sensors may have opened.

9. Try to restart and measure the voltage from 2U2 pin 6 to 2TB1-3 for 120 VAC ± 10% at initiation of compressor start. If no voltage is present, check the 2U1 "Start" and "Stop" relays.

10. To check the 2U1 stop relay, measure the voltage between J6-3 to ground, 120 VAC ± 10% should be present any time control voltage is applied.

11. To check the 2U1 start relay, disconnect the 2P8 plug from J8-1. Measure the voltage from J8-1 to ground, 120 VAC ± 10% should be present after the start command is given.

12. If the start or stop relays are not functioning properly, replace the 2U1 starter module.

13. If the compressor starts but does not ramp properly, proceed with the ramp-up check-out of the starter.

Starter Ramp-up Check-Out Procedure

If the compressor starts but does not have a smooth ramp-up, use the procedure below to check settings and component operation. Before using this procedure, change the following settings in UCP2 to ensure that the compressor motor does not go across the line during the test.

Located in **Service Settings, Machine Configuration Group (+ - + - + -)**

[ ] Maximum Acceleration Timer #1 = 4
[ ] Maximum Acceleration Timer #2 = 251
[ ] Acceleration Time Out Action = Shutdown

1. Adjust Current Limit potentiometer on 2U2 to 100%.

2. Adjust Starting Current potentiometers to 100%.

3. Scroll to % RLA under the Compressor Report menu or place a clamp-on ammeter on each incoming leg. Monitor and record readings during start.

4. Initiate a unit start.

5. % RLA should reach 100% or ammeter should reach unit RLA listed on unit nameplate within 2 seconds, and hold the reading for 2 seconds, and the unit should then shut down on failure to accelerate.

6. If the reading is something other than the RLA listed on the nameplate (± 10%), the starter is controlling to an incorrect value. Check the operation of the 2T10 transformer and the setting of the CFR.

7. If the transformer and CFR are operating properly replace the 2U2 logic module.

Note: Other problems can cause the compressor to have a poor ramp. For example, a compressor starting located will pull higher amps than normal and could cause the unit to go across the line.

Units Affected:

Any unit manufactured with a shipping date of July 13, 1995 through June 30, 1997 with a solid state starter must have the 2U2 logic module replaced if this module has not been replaced after July 15, 1997.

Parts Ordering:

One 2U2 logic module (MOD-00444) is required for each unit with a solid state starter. Contact your local Trane Parts Center to obtain parts.

BLOCKING VOLTAGE TEST

Add CVHE-SB-44 to:

L1 265VAC
L2 265VAC
L3 265VAC

With the starter disconnect closed and the unit at STOP, check the voltage between the line and load side of each power pole. A good power pole will show 58% of line voltage.
Lower voltage will indicate a defective power pole.

Disconnect motor from Power Pole

Higher voltage indicates

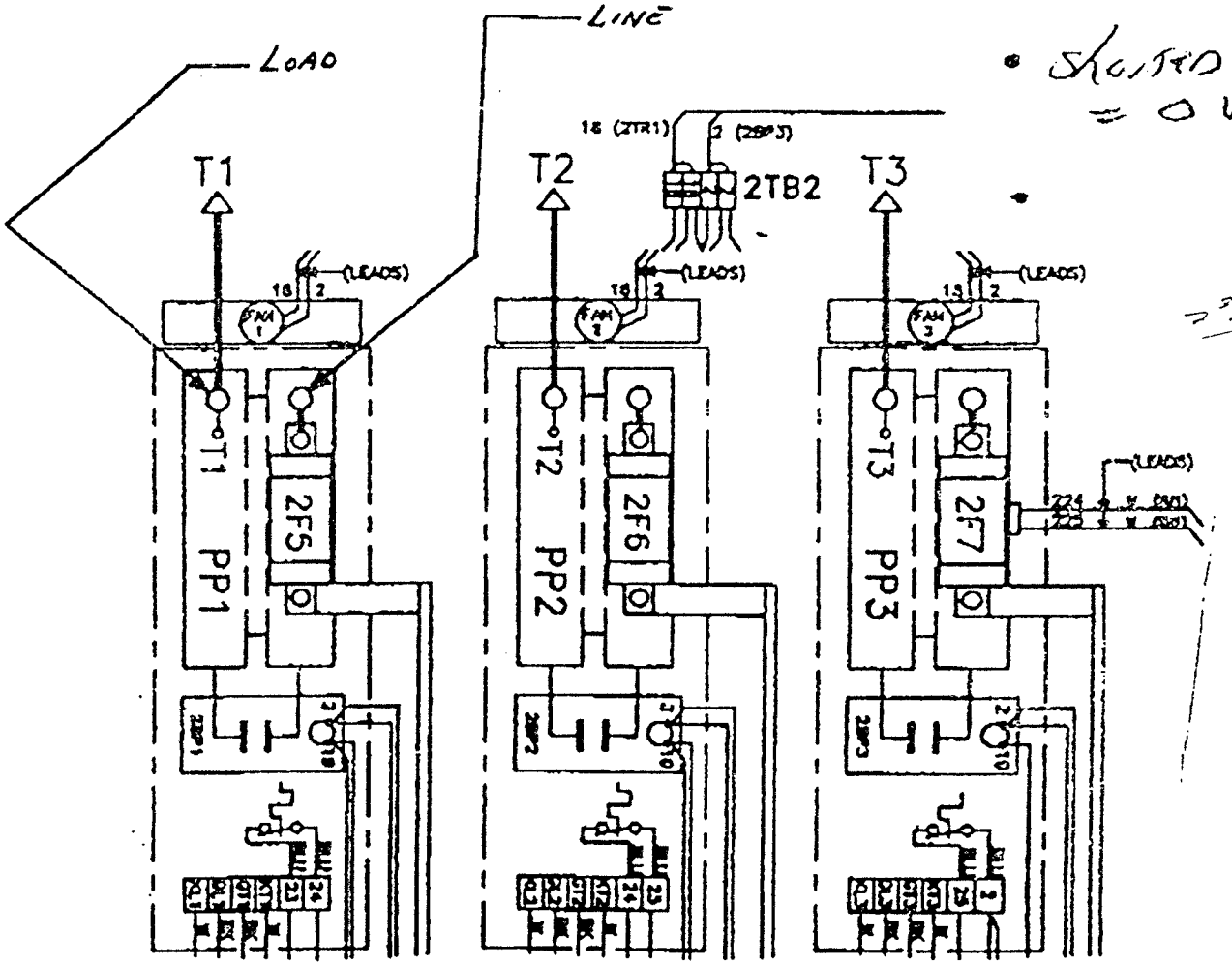

• Shorted SCR = 0 volts

• Power Pole Part number.

FLA = 690

34-7013-3 - Part # changed by FLA. Rating

		CHILLER S/N				
		STARTER S/N				
		RESISTANCE	NOMINAL	POWER POLE		
		TEST	GOOD	PP1	PP2	PP3
		KL-LINE	0	.4	.4	.4
		GL-LINE	8–12	9.4	10.0	10.1
		GT-LINE	MEGOHM	71.8K	71.9 K	72.5K
		KT-LINE	MEGOHM	72.3K	72.3K	72.5K
		KL-LOAD	MEGOHM	41.6K	41.8K	42.2K
		GL-LOAD	MEGOHM	42.0K	42.0K	42.5K
		GT-LOAD	8–12	9.3	11.1	10.8
		KT-LOAD	0	.4	.4	.4

IMPEDANCE TEST

Open the starter disconnect and disconnect the gate leads at the 2U2 module. Verify the following at each power pole for a good power pole.

	1	2	3
KL to Line = 0 ohms	0	0	0
GL to Line = 8 to 12 ohms	13 6	9.4	11 6
GT to Line = Megohms	67K	65K	80K
KT to Line = Megohms	60K	62K	80K
KL to Load = Megohms	68K	61K	80K
GL to Load = Megohms	25K	65K	11K
GT to Load = 8 to 12 ohms	11.6	13 4	10.5
KT to Load = 0 ohms	0	0	0

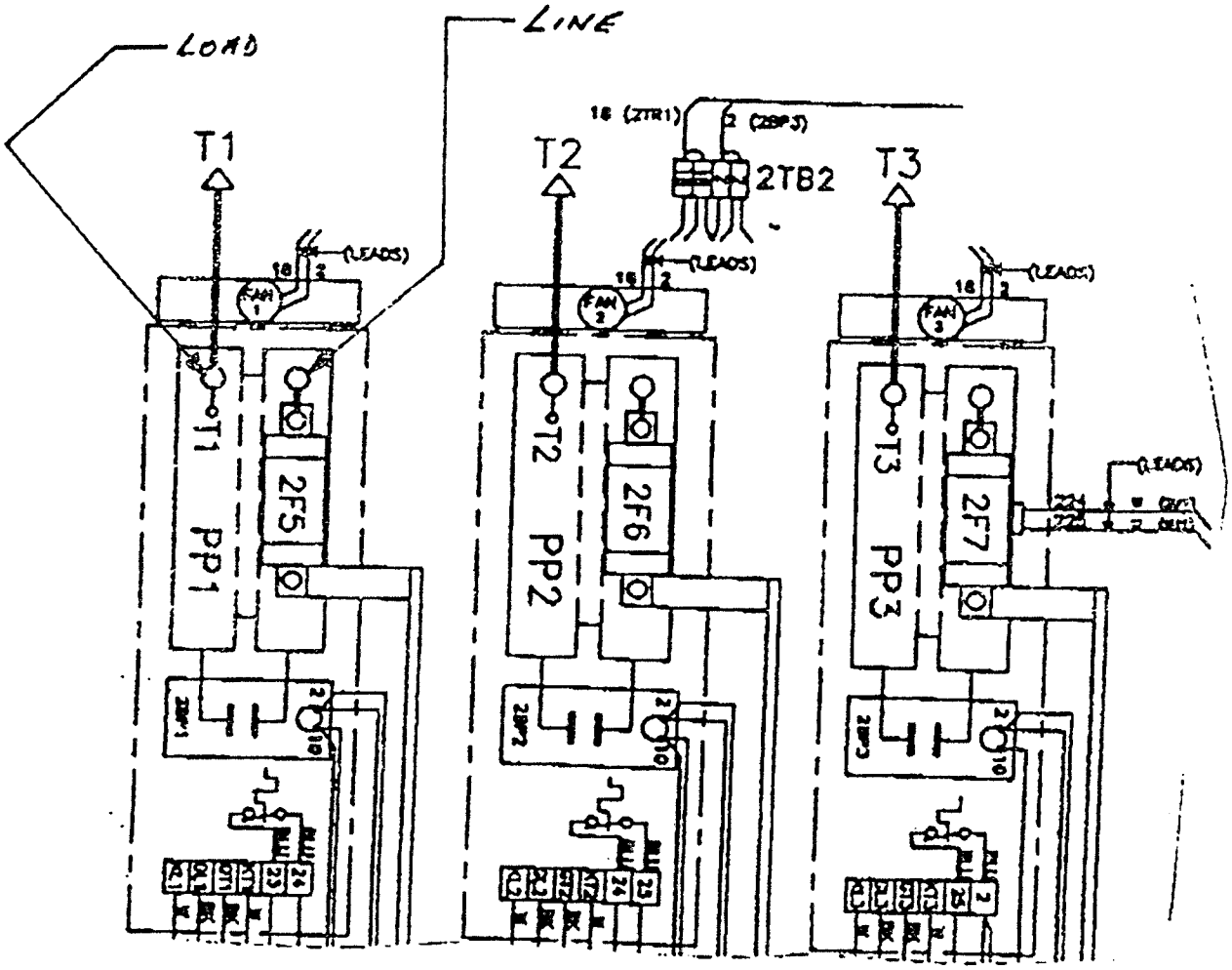

TRANE

Confidential Service Bulletin

CVHE-CSB-45C

Library	**Service Literature**
Product Section	**Refrigeration**
Product	**Centrifugal Liquid Chillers**
Model	**CVHE/F/G**
Literature Type	**Confidential Service Bulletin**
Sequence	**45C**
Date	**October 19, 1998**
File No.	**SV-RF-CTV-CVHE-CSB-45C-10/19/98**
Supersedes	**SV-RF-CTV-CVHE-CSB-45B-6/19/98**

Literature History: CVHE-CSB-45A, released March 24, 1998.
Revised bulletin, CVHE-CSB-45B, June 19, 1998, "Note" added on Page 2.
Revised bulletin, CVHE-CSB-45C, October 19, 1998, Extended cutoff to June 1, 1999.

Subject: GPM/TONNAGE OPTION USED ON CVHE/F/G UNITS - REVISION

Introduction:

The purpose of this bulletin is to provide information concerning the GPM/Tonnage option used on the CVHE/F/G water chillers using the UCP2 controls. This is a "Fix on Fail" service bulletin and NOT a Mandatory retrofit.

Units Affected:

All CVHE/F/G units using UCP2 controls that have the < = 150 PSIG GPM/Tonnage option installed on the unit.

Background:

A problem has been found with some of the CVHE/F/G machines using the UCP2 controls, where the GPM/Tonnage option is installed, in which you get inaccurate or no GPM/Tonnage readings. The problem is typically in the Alco reversing valve and/or transducers. This option is used for information only and creates no unit operational problems.

This bulletin discusses a change to the GPM/tonnage option that enhances its reliability and improves readout accuracy.

Since the Trane Company has a policy of continuous product improvement, it reserves the right to change specifications and design without notice. The installation and servicing of the equipment referred to in this booklet should be done by qualified, experienced technicians.

©American Standard Inc. 1998

NOTE: BE SURE AND RECORD ALL SETTINGS FROM THE OPERATOR SETTINGS AND SERVICE SETTINGS MENU INCLUDING THE FIELD STARTUP AND MACHINE CONFIGURATION GROUP SETTINGS BEFORE REMOVING THE CHILLER MODULE. THIS DATA WILL NEED TO BE REPROGRAMMED INTO THE UCP2 AFTER THE NEW CHILLER MODULE IS INSTALLED.

Discussion:

The current/(old) GPM/Tonnage option has a Alco reversing solenoid valve that reverses every 30 seconds, transducers mounted on the solenoid valve and tubing that runs from the transducers to the Evaporator and Condenser water boxes. One Transducer for the Condenser and one for the Evaporator.

Note: You will remove and discard the solenoid valve, piping and transducer as part of this retrofit.

The kit has four (4) transducers. Two each for the Condenser and two for the Evaporator. The new transducers will mount/attach to the Y-strainers at the water boxes. Provided cables will then be run back to new switching relays mounted in the control panel. The chiller module provides new software required for the enhancement.

For further accuracy/improvement of the GPM/Tonnage, the customer may move the transducers from the water box to the piping several feet from the chiller.

To complete the unit modifications, follow the instructions provided in the retrofit kit and also attached to this service bulletin. The two new switching relays, 1K1 and 1K2, are wired in as shown on the attached detail from wiring diagram 2307-5214 on terminals 1U1-6-1, 1U1-J6-2. Also the (4) new transducers for the condenser and evaporator water boxes are connected in as shown on terminals 1U1-J9-1 thru 10.

UCP2 Settings:

The following UCP2 control panel settings apply to this option.

1. (All Units) Machine Configuration menu: Differential Water Pressure Sensing option. You need to install either: <=150 PSIG or> = 150 PSIG.

2. There are (3) "new" screens you need to be aware of located in the field startup service settings group. These screens are listed below. These screens are NOT used on all units. They are used only on "open systems" (often times associated with air wash application) where the system on shutdown may go negative due to siphon action of the water. On these systems only, you must set the following three (3) screens.

a. Set this screen to Manual

CTV Only	Water Pressure Calibration: [Setting]
	Press (+) (-) to Change Setting

Possible values of [Setting] are:

Auto (Rom Default)
Manual

b. Measure and install the actual evaporator water pressure drop.
If the above menu is set to "Manual", the following two menus shall be displayed.

CTV Only	Measured Evap Diff Wtr Press: X.X PSID/kPa Press (+) (-) to Change Setting

Possible values are 0 to 25 PSID (0 to 172.4 kPa) in 0.1 PSID (kPa) increments. Rom default is 0.0 0.0 PSID (kPa).

C. Measure and install the actual condenser water pressure drop.

CTV Only	Measure Cond Diff Wtr Press: X.X PSID/kPa Press (+) (-) to Change Setting

Possible values are 0 to 25 PSID (0 to 172.4 kPa) in 0.1 PSID (kPa) increments. Rom default is 0.0 PSID (kPa).

As a point of clarification, when the 1st screen is in the Auto mode for the typical application, we do a calibration when the unit is off and the pumps are off. In the Manual mode, we do not use this calibration time, we use the Manual calibration numbers you install and calibrate on startup.

Material Authorization:

This service bulletin authorized one KIT05532 for each unit identified with a GPM/Tonnage option that is having problems. The kit contains (4) transducers, cables, (2) switching relays and sockets, chiller module and fittings to adapt the transducers to the water boxes. Instructions and parts lists are included with each kit.

Material Disposition:

The old material can be disposed in the field.

Labor Authorization:

Eight hours labor including travel. ALL CLAIMS MUST BE SUBMITTED ON THE "SERVICE WARRANTY SALES ALLOWANCE CLAIM" FORM 1-30.09-2 WITHIN 30 DAYS OF THE REPAIR.

Expiration Date:

The effective cutoff date of this bulletin is June 1, 1999.

GPM/Flow Sensing
Electrical Instructions For Retrofit Kit:

1. Connect 4 transducers to mechanical set ups, used to detect water flow, which are on the entering and leaving evaporator and entering and leaving condenser water boxes.

2. Install chiller module or EPROM.
   - Install a new chiller module if the present module is part number X13650450 extension-09 or earlier.
   - Install an EPROM kit if the present module is part number X13650450 extension -10 or later.

Important: If the chiller module is being installed, before removal record the 5 coefficients below, located in the Service Settings menu and re-enter after retrofit is complete. Evaporator Flow Equation Exponent, Evaporator Fluid Coefficients, Condenser Flow Coefficient and Condenser Flow Equation Exponent.

3. Mount 3.5 inch din rail on the bottom of the Chiller Module using the screw already on the module enclosure. Mount sockets on din rail, plug relays into sockets and attach relay clips to sockets. As shown in the picture below the coil will be at the bottom of the module.

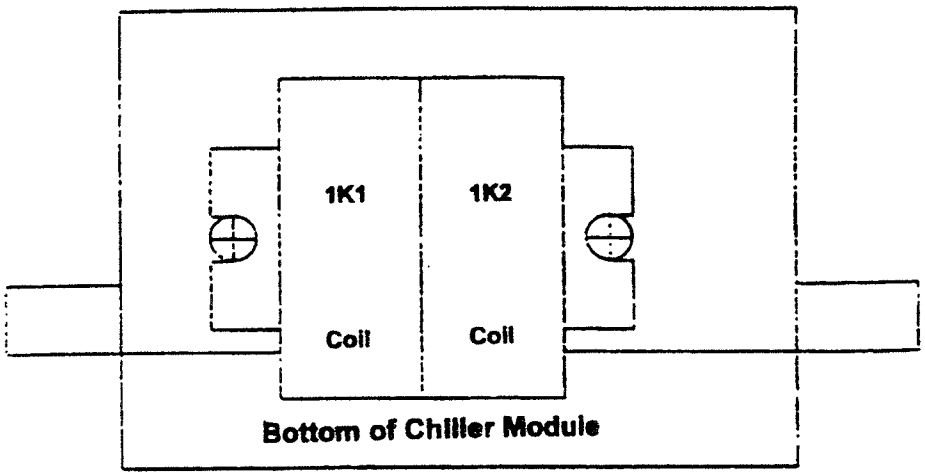

4. Wire the transducers, using the transducer cables, to the UCP2 chiller module.
   Refer to 1U1-J6-1, 1U1-J6-2 and 1U1-J9, 1 through 10, drawing 2307-5214 rev C.

Water Pressure Differential Option Assembly:

Water Pressure Differential Option Retrofit Kit #1:
- Evaporator and condenser non-marine water boxes.

Water Pressure Differential Option Retrofit Kit #2:
- Evaporator and condenser marine water boxes.
- Evaporator and condenser 032 and 050 cast condenser non-marine water boxes.

The example below shows how the retrofit should look after completion on a evaporator or condenser non-marine water box (KIT #1). The following are basic field retrofit instructions:

1. Shut off water valves located on the water boxes.
2. Do NOT remove the Y-strainer from the valve if you have the following:
   - Y-strainer is attached to the valve with copper tubing like above (go to step 5).
   - Y-strainer is attached directly to the valve as on a marine water box (go to step 5).
3. Otherwise, remove all piping and/or components from the water box valve to the transducer location.
4. Attach Y-strainer to valve assembly, making sure the flow is in the correct direction and up right.
   - As above (KIT #1) using flare fittings and 0.25 copper tubing OR
   - Directly to the valve (KIT #2) using a flare union and 0.25 NPT adapter.
5. Attach 0.25 NPTE x 0.125 NPT adapter to the Y-strainer.
6. Attach the transducer to the reducer.
7. Attach transducer connector and cable.
8. Run the transducer cable back to the UCP2 by following the temperature probe cable.
9. After installation is complete, turn valve on and check for leaks.

Note: Use the proper thread sealer on all joints, such as Loctite.

Example of KIT #1

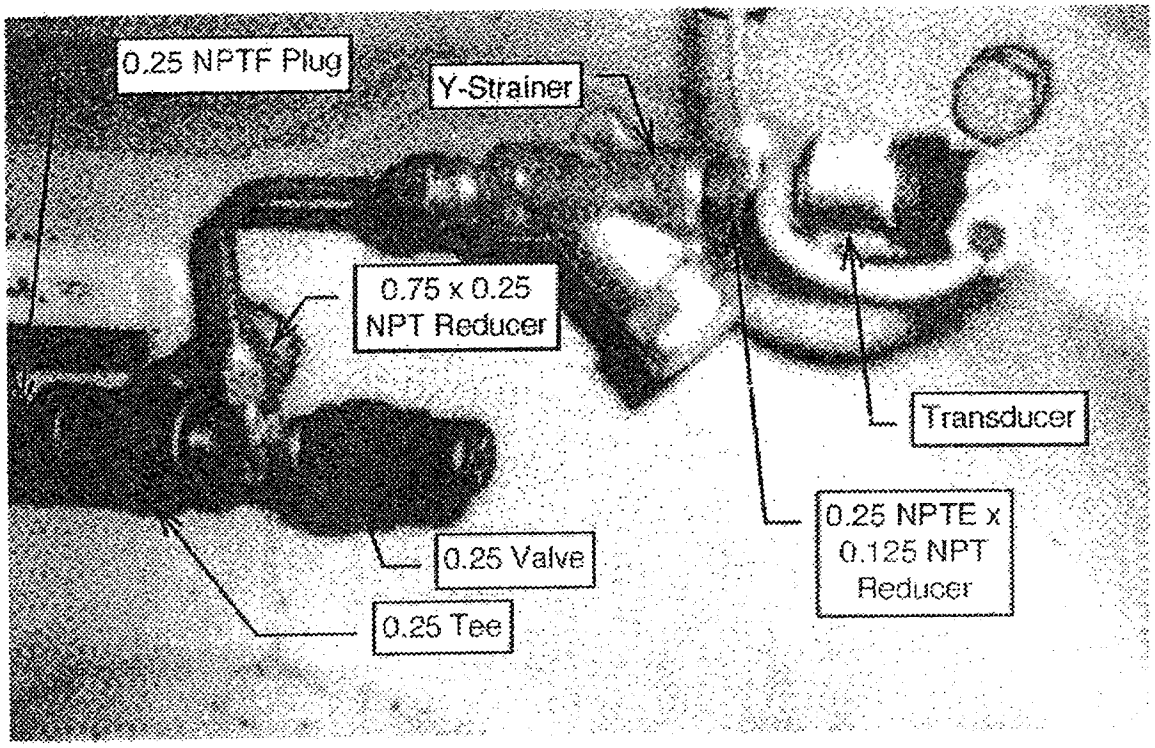

1U1 Chiller Module - J6-1 AND J6-2 - Detail From Drawing 2307-5214C

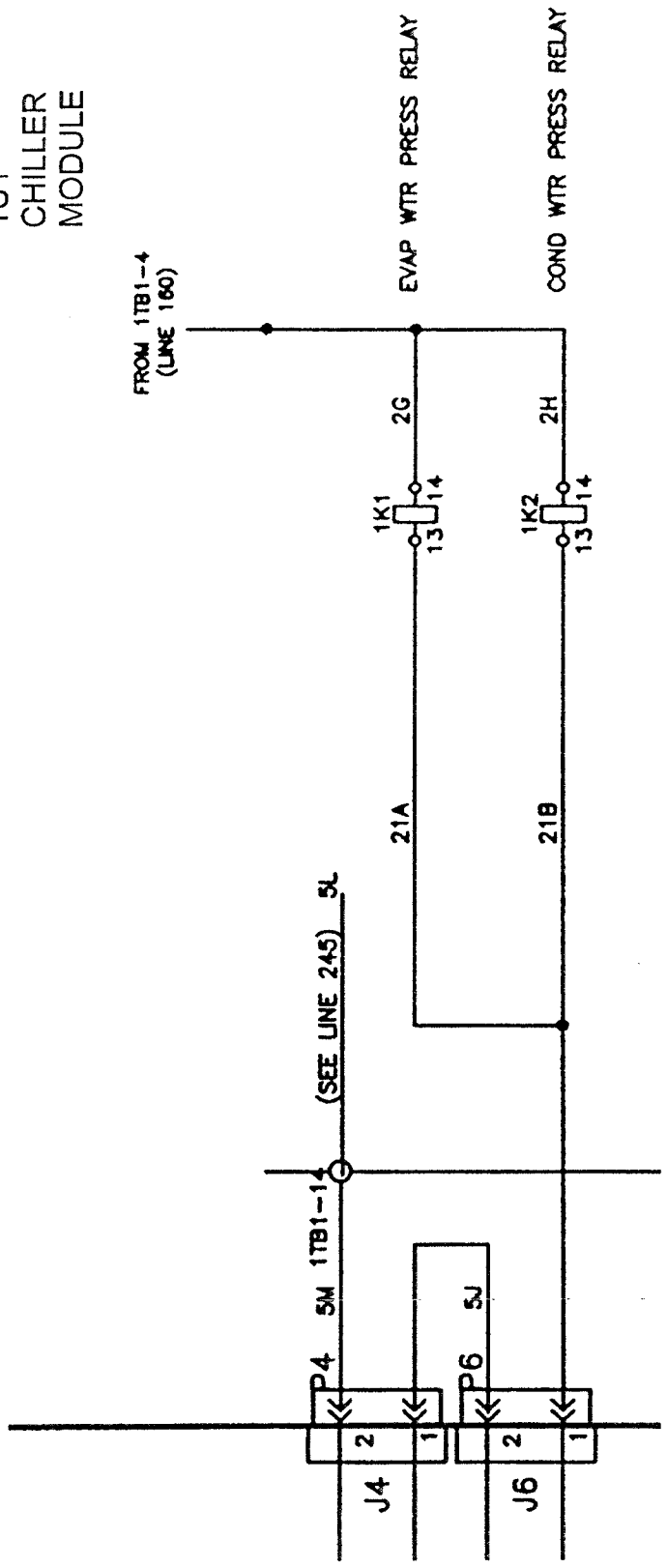

1U1 Chiller Module - J9-1 Through 10 - Detail From Drawing 2307-5214C

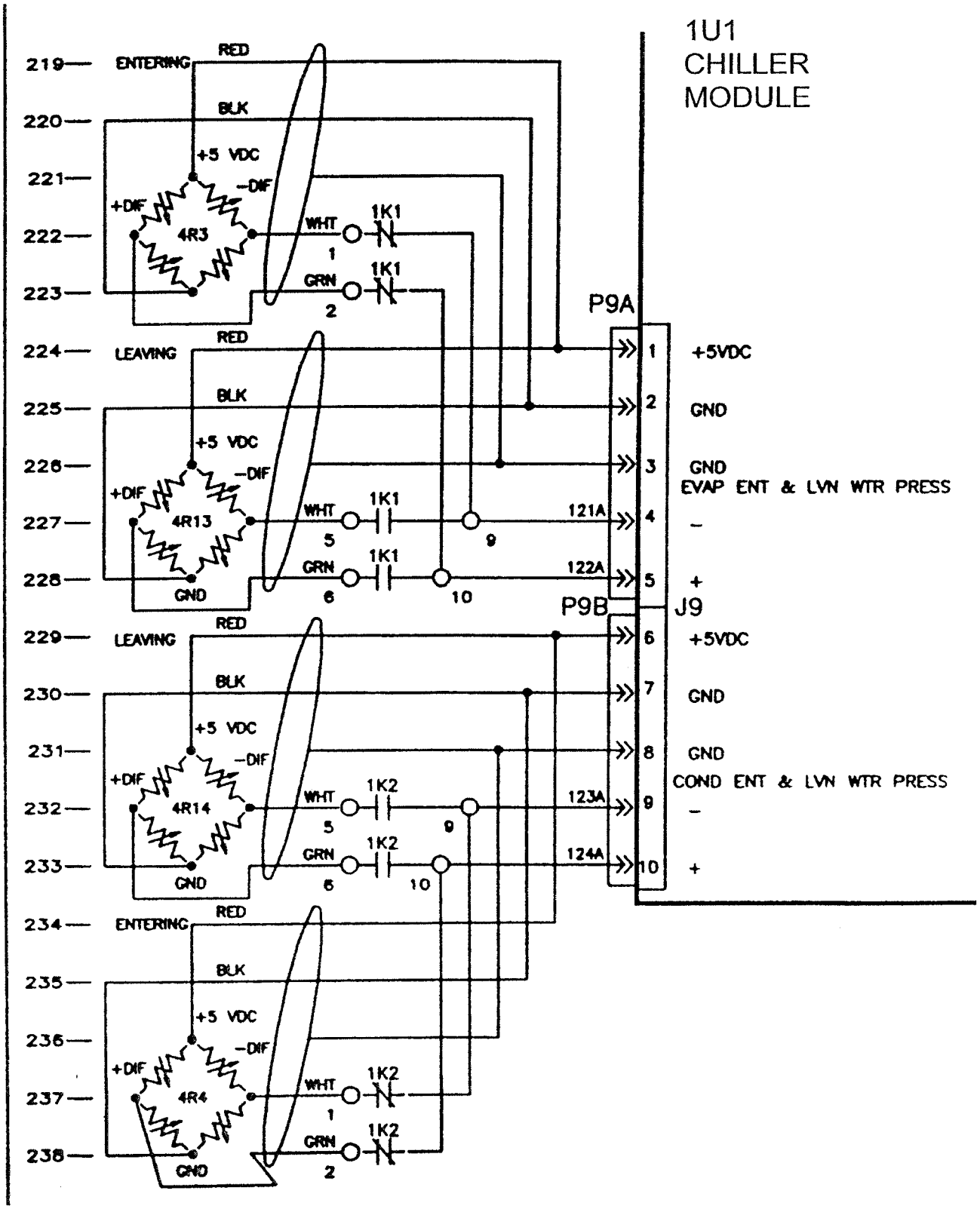

TRANE

Confidential Service Bulletin

CVHE-CSB-46A

Library	Service Literature
Product Section	Refrigeration
Product	Centrifugal Liquid Chillers
Model	CVHE/F/G
Literature Type	Confidential Service Bulletin
Sequence	46A
Date	June 18, 1998
File No.	SV-RF-CTV-CVHE-CSB-46A-6/18/98
Supersedes	SV-RF-CTV-CVHE-CSB-46-2/26/98

Literature History: Original bulletin, CVHE-CSB-46, dated February 26, 1998
Revised bulletin, CVHE-CSB-46A, dated June 18, 1998, added "Note" on page 2.

Subject: Fast Restart Situation for UCP2 Equipped Centrifugal Chillers

Introduction:

The purpose of this bulletin is to advise Trane Service Companies of a FIX ON FAIL RETROFIT to existing field CVHE/CVHF/CVHG chillers equipped with the UCP2 Control panel. A situation can occur where the chiller shuts down for no apparent reason and tries to restart, usually after approximately 35 seconds. The inlet guide vanes are not stroked closed before the restart takes place. Depending on compressor load, the unit may lock out on a "Compressor did not Accelerate" or a "Current Overload" diagnostic and will require a manual reset to restart or the compressor will start and run with no diagnostics generated. This situation has been termed "Fast Restart".

Units Affected:

All centrifugal chillers utilizing the UCP2 control panel manufactured from August 1993 to March 1998.

Discussion:

Under certain circumstances, when a slight power interruption to the UCP2 occurs (750 msec or so), the Starter module (and sometimes the CLD) experiences a power reset. However, the chiller and stepper modules do not reset. As a result, the chiller and stepper modules operate under the belief that the compressor is still running. If the inlet guide vanes are in the "auto" mode, the vanes will open farther in response to losing capacity. When the Starter module resets, the restart inhibit timer is set to 30 seconds if the winding temperatures are below 165° F. When this timer expires, the compressor motor is restarted. The Chiller module responds to the high starting current by closing the inlet guide vanes as a result of entering a current limit mode. The compressor may not accelerate fast enough to prevent a "compressor did not accelerate" latching diagnostic, or may go out on a "Current Overload" diagnostic, depending on load.
To correct this problem, a new Chiller module (MOD00706, X13650450-15-0) and a new Starter module (MOD00740, X13650453-16-0) are required.

Since the Trane Company has a policy of continuous product improvement, it reserves the right to change specifications and design without notice. The installation and servicing of the equipment referred to in this booklet should be done by qualified, experienced technicians.

©American Standard Inc. 1998

TRANE

General Service Bulletin

CVHE-SB-47

Library	Service Literature
Product Section	Refrigeration
Product	Centrifugal Liquid Chillers
Model	CVHE/F/G
Literature Type	Service Bulletin
Sequence	47
Date	March 12, 1998

Subject: UCP2 CVHE/F/G Extended Storage Requirements (Unit Is Installed With All Electrical)

Introduction:

The purpose of this bulletin is to provide information on extended storage requirements for UCP2 centrifugal chillers to be removed from service for an undetermined length of time.

Important!
To prevent injury or death, please follow the warnings provided throughout this manual regarding hazardous voltage and refrigerant removal.

Discussion:

⚠ WARNING
USE CARE WHEN SERVICING SYSTEM WITH POWER ON. Failure to do so could result in injury or death due to electrical shock or contact with moving parts.

The following steps are necessary in order to properly prepare a unit for storage.

1. Remove all liquid refrigerant if the unit is charged.

⚠ WARNING
TO AVOID INJURY OR DEATH DUE TO INHALATION OF, OR SKIN EXPOSURE TO REFRIGERANT, CLOSELY FOLLOW ALL SAFETY PROCEDURES DESCRIBED IN THE MATERIAL SAFETY DATA SHEET. Failure to do so may expose operating and/or servicing personnel to liquid and/or vaporous refrigerant.

Since the Trane Company has a policy of continuous product improvement, it reserves the right to change specifications and design without notice. The installation and servicing of the equipment referred to in this booklet should be done by qualified, experienced technicians.

©American Standard Inc. 1998

2. After the liquid refrigerant is removed, using a recovery/recycle unit or vacuum pump, pull a vacuum to remove remaining refrigerant vapor from the unit.

3. After all traces of refrigerant are out of the unit, a positive nitrogen charge should be put into the unit (6 to 8 PSIG). This positive pressure must be checked monthly to insure no noncondensibles get into the unit. Use a pressure gage on the evaporator shell to verify that the 6 to 8 PSIG dry nitrogen holding charge is still in the chiller. If this charge has escaped, contact a qualified service organization and the Trane sales engineer that handled the order.

4. The refrigerant charge should be stored in proper refrigerant containers. Due to possible leakage, do not store in used drums.

⚠ WARNING
USE CARE WHEN MEASUREMENTS, ADJUSTMENTS OR OTHER SERVICE-RELATED OPERATIONS ARE PERFORMED WITH POWER ON. Failure to do so could result in death due to electrical shock or contact with moving parts.

5. Maintain control power to the control panel. This will maintain oil temperature in the oil sump and the capability of the control panel to present report information. The Chiller, Refrigerant and Compressor Reports should be viewed once a week for normal readings. Any abnormal observation must be reported to the Trane Sales Engineer that handled the order.

6. Remove the factory installed jumper or the field installed wiring on terminals J5-1 and J5-2 on the 1U1 Chiller Module in the unit control panel. This will prevent unwanted chiller operation.

7. Set the purge operating mode to OFF on UCP2 chillers.

8. The oil can be left in the unit.

9. The water side should not cause a problem if shut down and drained. There may be slight scaling inside the tubes, but not enough to cause a problem. Customer should inspect and clean tubes before the unit is returned to service.

Important
Do not use untreated or improperly treated water, or equipment damage may occur.

Important
Scale deposits are best removed by chemical means. Be sure to consult any qualified chemical house in the area (i.e., one familiar with the local water supply's chemical mineral content) for a recommended cleaning solution suitable for the job.

10. Motor bearings: If the motor sits for a long time the bearings could take a set and cause bearing problems/replacement later. Once every six months the chiller oil pump must be started and the compressor motor bump started to rotate the shaft. Contact a qualified service organization to perform this task. If the compressor motor cannot be bump started, then the shaft must be rotated manually by a qualified service organization.

11. Obtain an oil analysis initially after 6 months of storage, and once each succeeding year. If no oil breakdown is evident do not change the oil. If breakdown is evident, the oil must be replaced.

12. If the unit is stored for more than five years, and the storage is expected to be indefinite, the unit should be examined for leaks every five years from the initial storage date.

13. When the unit is to be returned to service, the services of a qualified service organization should be obtained to conduct all activities associated with the startup of a new chiller.

Units Affected:

All electrical installed UCP2 CVHE/F/G centrifugal units.

Material Authorization:

No material authorized.

Labor and Travel Authorization

No labor or travel authorized.

Expiration Date:

No expiration date for this service bulletin.

DuPont Fluorochemicals

Procedures for Returning Suva® 123 Containers and Materials

(Empty Cylinders, Defective Containers, Product)



Table of Contents

Overview 2

Emergency Response 2

Return Authorization Procedures

- Empty Containers 3
- Defective Containers 4
- Product 6

Shipping Procedures 7

Authorized Return Sites 8

Field Office Return Site Guide 9

Preparing Bill-of-Lading 10

Examples

- A—Empty Cylinder Return Authorization Form 11
- B—Empty Cylinder Bill of Lading Form 12
- C—Empty Cylinder Return Tag 13
- D—Defective Container Return Authorization Form 14
- E—Defective Container Returned for Inspection Tag 15
- F—Product Return Authorization Form 16
- G—Product Returned for Inspection Tag 17

Overview

This document describes the proper procedures for returning Suva® 123 empty cylinders, defective containers, and product to DuPont. As a shipper of record, you are responsible for maintaining container integrity at all times, preparing and properly labeling each vessel, preparing a proper bill-of-lading (BOL), and ensuring that the shipment complies with all DOT regulations.

To assist you, DuPont will provide Material Safety Data Sheets (MSDS), Return Authorization (RA) tags, plus an easy-to-use bill-of-lading and Return Authorization form. Please contact your DuPont Customer Service Representative to obtain these items.

DuPont will pay the return freight if you call DuPont Transportation (TONA) at (800) 554-8662 to arrange shipment, use an approved carrier, and prepare and ship the containers in accordance with this guideline.

Emergency Response

Companies shipping used refrigerant to DuPont may use the CHEMTREC 24-hour emergency telephone number (800) 424-9300. However, if your company is not a member of the Chemical Manufacturing Association (CMA) in Washington, D.C., this telephone number may not be used as the required Department of Transportation (DOT) emergency response telephone contact when shipping other hazardous materials.

Returning Empty Containers (Not Recovered Refrigerant)

1. Complete Return Authorization (RA) form (see Example A).

   Note: RA form is attached behind bill-of-lading (BOL) form.

2. Contact DuPont TONA at (800) 554-8662 to arrange shipment and obtain RA number. Remember to add RA number to the Return Authorization form and BOL. DuPont TONA will inform you of the RA number, carrier, and DuPont return location. Normally this is the site that originally shipped product to you.

   Note: Empty containers should be returned on the same pallet(s) as received and properly secured to the pallet to provide a safe return to DuPont. Use banding to secure cylinders to pallet(s).

3. Complete BOL form (Example B), indicating correct quantities, weight, DOT description, and RA number.

   Note: For return shipments to Kingston, Ontario, the carrier will complete the necessary customs paperwork (Canadian Customs Invoice).

4. Identify each pallet with an "Empty Cylinder Return" tag, which must cross-reference the RA number and customer purchase order number (see Example C).

5. Ship to DuPont. Provide the carrier with BOL and attach RA form (packing list) to the shipment.

6. Fax a copy of the RA form to the designated DuPont return facility within 24 hours of shipment.

❶ 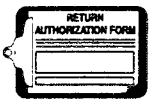

Complete RA form.

❷ 
Call (800) 554-8662 to arrange shipment and get RA number.

❸ 

Complete BOL form.

❹ 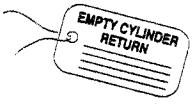

Tag each pallet.

❺ 
Ship to DuPont. Provide the carrier with BOL and attach RA form (packing list) to the shipment.

❻ 
Fax RA form to DuPont return facility.

Will Accept

- Any DuPont Suva® 123 returnable container.

  Note: The DOT requires valves to be protected for shipping on all cylinders, including returned empties. Contact your customer service representative for details.

  Note: If a container shows visible damage, the full cost of the container will be charged. Examples of visible damage include:

  – Use of flame on cylinders, as evidenced by burn marks through the paint.
  – Dents 4″ in length or greater.
  – Gouges in the metal to a depth of 3/8″ or greater.
  – Severe rusting (more than 50% of the cylinder).

Returning Defective Containers

1. Complete Return Authorization (RA) form (see Example D).

   Note: RA form is attached behind bill-of-lading (BOL) form.

2. Contact DuPont TONA (800) 554-8662 to arrange shipment and obtain RA number. Remember to add RA number to the Return Authorization form and BOL. DuPont TONA will inform you of the RA number, carrier, and DuPont return location. Normally, this is the site that originally shipped product to you.

   Note: Defective containers should be consolidated and shipped with return cylinders.

3. Complete BOL form, indicating correct quantities, weight, DOT description, and RA number.

   Note: For return shipments to Kingston, Ontario, the carrier will complete the necessary customs paperwork (Canadian Customs Invoice).

4. Identify each container with a "Returned for Inspection" tag. This tag must be filled out completely and must cross-reference the RA number and customer purchase order number (see Example E).

5. Ship to DuPont. Provide the carrier with BOL and attach RA form (packing list) to the shipment.

6. Fax a copy of the RA form to the designated DuPont return facility within 24 hours of shipment.

❶ 

Complete RA form.

❷ 
Call (800) 554-8662 to arrange shipment and get RA number.

❸ 

Complete BOL form.

❹ 

Tag each container.

❺ 
Ship to DuPont. Provide the carrier with BOL and attach RA form (packing list) to the shipment.

❻ 
Fax RA form to DuPont return facility.

Will Accept for Credit If the Following Criteria Are Met:

- The date code sticker on the container is less than two years old.
  - For cylinders, information on small (1/2″ × 3/4″) sticker:
    120L8A, or 120/8A, or 120/8A, where
    120 = 120th day of the year
    8 = Year, 1998
    L or A = Filler's I.D.
- The container does not show visible damage.
- The container is lightweight or empty, and the protective shrink-wrap is intact on the valve.
- If the shrink-wrap is removed, the customer determines the container is defective during use and the defect is verified by a DuPont site inspection.

Credits/Refunds

- Credit amount will be based on the current list price of product.
- If container is full and no defect is found, a 30% handling fee will be assessed based on the current list price of product.
- All defective containers reported and returned by customer will be inspected to determine appropriate disposition as shown in the table below.
- For situations where defect cannot be readily identified upon receipt, credit will be issued up front; if defect is later found, offsetting debit will be applied.

Container Contents?		Shrink-wrap Intact?		Defect Confirmed?[1]		Credit and Charges[2]
Partially Empty	Full	Yes	No	Yes	No	
X		X		X		Full
X			X	X		Full
X			X		X	No credit
	X		X	X		Full
	X		X		X	Full less 30% handling fee

(1) Common defects include broken valves, leaks at valve stems, rupture disc failure, and empty or lightweight containers with shrink-wrap intact.

(2) **Please Note:** Individual cases will be reviewed with Sales/Marketing for final disposition.

Returning Product (e.g., Overstock/Excess Inventory)

1. Contact your DuPont Sales or Customer Service Representative for approval and disposition. All product returns are subject to DuPont approval and will be based on DuPont's ability to resell the product.
2. Complete Return Authorization (RA) form (see Example F).

   Note: RA form is attached behind bill-of-lading (BOL) form.
3. Contact DuPont TONA (800) 554-8662 to arrange shipment and obtain RA number. DuPont TONA will inform you of the RA number, carrier, and DuPont return location. Normally, this is the site that originally shipped product to you.

   Note: Product returns should be consolidated and shipped with return cylinders.
4. Complete BOL form, indicating correct quantities, weight, DOT description, and RA number.

   Note: For return shipments to Kingston, Ontario, the carrier will complete the necessary customs paperwork (Canadian Customs Invoice).
5. Identify each container with a "Returned for Inspection" tag. This tag must be filled out completely and must cross-reference the RA number and customer purchase order number (see Example G).
6. Ship to DuPont. Provide the carrier with BOL and attach RA form (packing list) to the shipment.
7. Fax a copy of the RA form to the designated DuPont return facility within 24 hours of shipment.

❶  Call DuPont Sales or Customer Service Representative for approval.

❷ 

Complete RA form.

❸  Call (800) 554-8662 to arrange shipment and get RA number.

❹ 

Complete BOL form.

❺ 

Tag each container.

❻  Ship to DuPont. Provide the carrier with BOL and attach RA form (packing list) to the shipment.

❼ 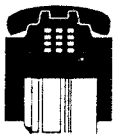 Fax RA form to DuPont return facility.

Will Accept for Credit If the Following Criteria Are Met:

- The container is full and the protective shrink-wrap is intact on the valve.
- The container does not show visible damage.
- If the shrink-wrap is removed, product can be returned through recovered refrigerant program. Contact your DuPont sales or customer service representative for details.

Credits/Refunds

- Credit amount will be based on the customer's last purchase price of product.
- A 30% restocking fee will be assessed based on the current list price of product.

Shipping Procedures

1. Verify that the cylinders (valves, plugs, reliefs, etc.) are secure and not leaking.
2. Make sure that all containers show the proper UN number and shipping name and reflect the appropriate hazard class.
3. Identify all containers and pallets with RA tags that include RA number and customer purchase order number.
4. Return freight collect. DuPont TONA will tell you which DuPont location to ship to. Normally, this is the site that originally shipped the cylinders to you.
5. All shipments must be properly blocked and braced.

Proper Palletizing

Empty Cylinder Returns

- Empty cylinders should be palletized vertically on a standard 4-way pallet (same pallet(s) as received) and secured for shipment using adequate banding materials. Bands should be at two or three locations vertically (6–12" below the top shoulder, 6–12" above the base, and the center) to ensure the load does not separate during transport.

Options for banding material include:

1) **Steel banding that uses the 3/4" wide by 0.023" thick banding with 3/4" clips. Kits that have the bander, crimper, seals, and banding are about $275.00 each.**
2) **Poly strapping. A kit costs about $90.00 including the tensioner, cutter, buckles, and 1,000' plastic banding.**

Steel banding and poly strapping kits can be ordered through any local supply house for shipping materials. They can also be ordered through the following:

Shipper's Supply Co. (contact is Charlie West)
Phone number: (800) 357-2899

or

Fork-Lift Systems
Phone number: (800) 221-6556

Defective Containers and Other Returned Product

- Consolidate and ship with return containers.

Authorized Return Sites

	Empty Containers	Defective Containers	Product
DuPont Fluoroproducts 6000 Bridgehead Road Antioch, CA 94509 Fax: 510-242-6153	X	X	X
DuPont Fluoroproducts c/o Louisville Packaging 7753 National Turnpike Louisville, KY 40214 Fax: 502-363-6206	X	X	X
DuPont Fluoroproducts c/o Franke Filling, Inc. 5960 Tension Drive Fort Worth, TX 76112 Fax: 817-457-8527	X	X	X
DuPont Fluoroproducts c/o DuPont Canada, Inc. Kingston Distribution Center 775 Development Road Kingston, Ontario Canada K7M 4W6 Fax: 618-548-5098	X	X	X

Field Office Return Site Guide

Field Office Location	DuPont Return Site
Alabama	Louisville Packaging
Alaska	Antioch
Arizona	Franke Filling
Arkansas	Louisville Packaging
California	Antioch
Colorado	Louisville Packaging
Connecticut	Kingston
Delaware	Kingston
District of Columbia	Kingston
Florida	Louisville Packaging
Georgia	Louisville Packaging
Hawaii	Antioch
Idaho	Antioch
Illinois	Louisville Packaging
Indiana	Louisville Packaging
Iowa	Louisville Packaging
Kansas	Louisville Packaging
Kentucky	Louisville Packaging
Louisiana	Louisville Packaging
Maine	Kingston
Maryland	Kingston
Massachusetts	Kingston
Michigan	Kingston
Minnesota	Kingston
Mississippi	Louisville Packaging

Note: For return shipments to Kingston, Ontario, the carrier will complete the necessary customs paperwork (Canadian Customs Invoice).

Field Office Location	DuPont Return Site
Missouri	Louisville Packaging
Montana	Antioch
Nebraska	Louisville Packaging
Nevada	Antioch
New Hampshire	Kingston
New Jersey	Kingston
New Mexico	Franke Filling
New York	Kingston
North Carolina	Louisville Packaging
North Dakota	Louisville Packaging
Ohio	Louisville Packaging
Oklahoma	Louisville Packaging
Oregon	Antioch
Pennsylvania	Kingston
Rhode Island	Kingston
South Carolina	Louisville Packaging
South Dakota	Louisville Packaging
Tennessee	Louisville Packaging
Texas	Franke Filling
Utah	Antioch
Vermont	Kingston
Virginia	Kingston
Washington	Antioch
West Virginia	Louisville Packaging
Wisconsin	Kingston
Wyoming	Antioch

Preparing Bill-of-Lading

DuPont will provide a bill-of-lading (BOL) form for return shipments. All items on this form should be filled out by the shipper except those specifically indicated to be filled out by the carrier. The BOL form must contain the following information:

- Proper shipping name, hazard class, UN number
- Name of carrier
- Date
- Company name and address of shipper
- Signature of shipping company's representative
- Shipping destination
- Number and types of containers
- Freight prepaid or collect
- Gross product weight, in pounds (includes the weight of the containers, except for tank trucks)
- DOT "Nonflammable Gas" placards are not required for shipments of Suva® 123 in any container size since this material is not regulated by the DOT.
- Driver's signature

EXAMPLE "A" - EMPTY CYLINDER RETURN

RETURN AUTHORIZATION FORM

(FOR RETURN OF EMPTY CYLINDERS, DEFECTIVE DUPONT CONTAINERS, AND/OR FULL PRODUCT RETURNS)

RA # 1234

Trane P.O. No. B6B027ADS01

Carrier/PRO Number: CF/2468

Returned by:

Company: TRANE

Address: ANYWHERE U.S.A.

City: _____ State: _____ Zip: _____

INSTRUCTIONS:

1. Please complete all information related to the nature of your return.
2. Contact DuPont TONA to arrange shipment and to obtain RA # by calling 1-800-554-8662.
3. Return your container(s) with appropriate tags and BL/RA forms to the designated DuPont return location.
4. Fax completed RA form to return facility.

DESCRIPTION OF EMPTY CONTAINERS

FOR CUSTOMER USE ONLY					FOR DUPONT USE ONLY				
Water Capacity & Type	DOT Specification	Total No. of Containers Shipped	Tare Weight Container	Total per Weight	Total No. of Tare Received	Exceptions Containers Shipped Containers Received	Defect vs Y/N	Noted Received	Date Comments
84.5# Cyl.	4BW225	2	40#	80					
170# Cyl.	4BW225	4	61#	244					
TOTAL		6		329					

DEFECTIVE DUPONT CONTAINERS OR FULL PRODUCT RETURNED FOR CREDIT

Container	Container Date	Shrinkwrap/ Seal Intact? Y	N	If No, explanation of defect required	DUPONT PLANT Claim Justified? Y	N	Comments

EXAMPLE "B" - EMPTY CYLINDER RETURN

DuPont Fluoroproducts

FOR EMPTY CYLINDER RETURN
STRAIGHT BILL OF LADING SHORT FORM-ORIGINAL-NOT NEGOTIABLE

RETURN AUTHORIZATION FORM IS ATTACHED BEHIND THE BOL

CARRIER NAMED BELOW, RECEIVED, subject to the classifications and lawfully tariffs in effect on the date of the issue of this shipping order

CARRIER NO CF/2468

DATE 5/5/98

RA No. 1234

FROM (COMPANY): TRANE

ADDRESS: ANYWHERE U.S.A.

EMERGENCY CONTACT
FOR A CHEMICAL EMERGENCY
(SPILL, LEAK, EXPOSURE, FIRE OR ACCIDENT)

Contact DuPont - Day or Night - By Calling

CHEMTREC - (800) 424-9300 (Toll Free)
Arlington, VA 527-3887
Outside Continental U.S.A. (703) 527-3887 (Collect)

FREIGHT COLLECT: Send Freight Bills To:
FMIS Freight
P.O. Box 8964, Wilmington, DE 19899

Subject to Section 7 conditions of the bill of lading. If this shipment is to be delivered to the consignee without recourse on the consignor, the consignor shall sign the following statement:
The carrier shall not make delivery of this shipment without payment of freight and all other lawful charges.

Per JOHN DOE
(Signature of Consignor)

If charges are to be prepaid, write or stamp here "To be Prepaid".

CONSIGNED TO: (Mail or street address of consignee-For purposes of notification only)
E.I. du Pont de Nemours and Company
c/o Fluoroproducts
STREET 7753 NATIONAL TURNPIKE
CITY LOUISVILLE STATE KY ZIP 40214

DESCRIPTION OF MATERIALS

No. of Cylinders	Residue: Last Contained	Gross Wt.
6	2,2-Dichloro-1,1,1-trifluoroethane (not regulated) (Suva® 123)	324

For return of defective DuPont cylinders or full product, use space provided below for quantity.

No. of Cylinders		Gross Wt.
	2,2-Dichloro-1,1,1-trifluoroethane (not regulated) (Suva® 123)	

This is to certify that the above-named materials are properly classified, described, packaged, marked and labeled, and are in proper condition for transportation according to the applicable regulations of the Department of Transportation.

JOHN DOE
Shipper Name

5/5/98
Date

H-74285

EXAMPLE "C" - EMPTY CYLINDER RETURN

DUPONT

"Sample Tag"
"FRONT"

EMPTY CYLINDER RETURN

RA # 1234

CUSTOMER P.O. # B6B027ADS01
(If applicable)

CUSTOMER NAME: TRANE

LOCATION: ANYWHERE U.S.A.

Form CN-4226 12/97

"BACK"

RETURN INSTRUCTIONS:

1. Please complete all information related to the nature of your return.
2. Contact DuPont TONA (1-800-554-8662) to arrange shipment and to obtain return authorization number.
3. Return your container(s) with appropriate tags and Bill of Loading/Return Authorization forms to the designated DuPont return location.
4. Fax a copy of RA form to DuPont return facility.

NOTE: As the shipper of record, you are responsible to ensure that the shipment complies with all DOT regulations.

EXAMPLE "D" - DEFECTIVE CONTAINER RETURN

RETURN AUTHORIZATION FORM

(FOR RETURN OF EMPTY CYLINDERS, DEFECTIVE DUPONT CONTAINERS, AND/OR FULL PRODUCT RETURNS)

RA # 1234

Trane P.O. No. B6B027ADS01

Carrier/PRO Number: CF/2468

Returned by:

Company: TRANE

Address: ANYWHERE U.S.A.

City: _____ State: _____ Zip: _____

INSTRUCTIONS:

1. Please complete all information related to the nature of your return.
2. Contact DuPont TONA to arrange shipment and to obtain RA # by calling 1-800-554-8662.
3. Return your container(s) with appropriate tags and BL/RA forms to the designated DuPont return location.
4. Fax completed RA form to return facility.

DESCRIPTION OF EMPTY CONTAINERS

FOR CUSTOMER USE ONLY					FOR DUPONT USE ONLY				
Water Capacity & Type	DOT Specification	Total No. of Containers Shipped	Tare Weight per Container	Total Tare Weight	Total No. of Containers Received	Exceptions Containers Shipped vs Received	Defect Noted Y/N	Date Received	Comments
84.5# Cyl.	4BW225		40#						
170# Cyl.	4BW225		61#						
TOTAL									

DEFECTIVE DUPONT CONTAINERS OR FULL PRODUCT RETURNED FOR CREDIT

Container	Container Date	Shrinkwrap/ Seal Intact? Y	N	If No, explanation of defect required	DUPONT PLANT Claim Justified? Y	N	Comments
SUVA®-123 ~~50 lb cyl~~	5/8/98	X					
SUVA®-123 200 lb cyl	5/15/98		X	Valve would not reseat. 35 lb lost.			

EXAMPLE "E" - DEFECTIVE CONTAINER RETURN

"Sample Tag"
"FRONT"

RETURNED FOR INSPECTION

RA # 1234

CUSTOMER P.O. # B6B027ADS01
(if applicable)

Customer Name: TRANE

Location: ANYWHERE U.S.A.

[X] Defective Container [ ] Product Return

Nature of Defect or Reason for Product Return: SUVA®-123 200 lb. cylinder - valve would not reseat. 30 lb lost.

NOTE: Do not ship leaking or unsafe containers.
Contact DuPont at 1-800-235-SUVA for instructions.

"BACK"

RETURN INSTRUCTIONS:

1. Please complete all information related to the nature of your return.
2. Contact DuPont TONA (1-800-554-8662) to arrange shipment and to obtain return authorization number.
3. Return your container(s) with appropriate tags and Bill of Lading/Return Authorization forms to the designated DuPont return location.
4. Fax a copy of RA form to DuPont return facility.

NOTE: As the shipper of record, you are responsible to ensure that the shipment complies with all DOT regulations.

EXAMPLE "F" - PRODUCT RETURN

RETURN AUTHORIZATION FORM

(FOR RETURN OF EMPTY CYLINDERS, DEFECTIVE DUPONT CONTAINERS, AND/OR FULL PRODUCT RETURNS)

RA # 1234

Trane P.O. No. B6B027ADS01

Carrier/PRO Number: CF/2468

Returned by:

Company: TRANE

Address: ANYWHERE U.S.A.

City: _____ State: _____ Zip: _____

INSTRUCTIONS:

1. Please complete all information related to the nature of your return.
2. Contact DuPont TONA to arrange shipment and to obtain RA # by calling 1-800-554-8662.
3. Return your container(s) with appropriate tags and BL/RA forms to the designated DuPont return location.
4. Fax completed RA form to return facility.

DESCRIPTION OF EMPTY CONTAINERS

FOR CUSTOMER USE ONLY					FOR DUPONT USE ONLY				
Water Capacity & Type	DOT Specification	Total No. of Containers Shipped	Tare Weight Container	Total per Weight	Total No. of Tare Received	Exceptions Containers Shipped Containers Received	Defect vs Y/N	Noted Received	Date Comments
84.5# Cyl.	4BW225		40#						
170# Cyl.	4BW225		61#						
TOTAL									

DEFECTIVE DUPONT CONTAINERS OR FULL PRODUCT RETURNED FOR CREDIT

Container	Container Date	Shrinkwrap/ Seal Intact? Y	N	If No, explanation of defect required	DUPONT PLANT Claim Justified? Y	N	Comments
SUVA®-123 ~~50 lb cyl~~	5/15/98	X					

EXAMPLE "G" – PRODUCT RETURN

DUPONT

"Sample Tag"
"FRONT"

RETURNED FOR INSPECTION

RA # 1234

CUSTOMER P.O. # B6B027ADS01
(if applicable)

Customer Name: TRANE

Location: ANYWHERE U.S.A.

☐ Defective Container ☒ Product Return

Nature of Defect or Reason for Product Return: Overstock - return for credit.

NOTE: Do not ship leaking or unsafe containers.
Contact DuPont at 1-800-235-SUVA for instructions.

Form CN-7542 12/97

"BACK"

RETURN INSTRUCTIONS:

1. Please complete all information related to the nature of your return.
2. Contact DuPont TONA (1-800-554-8662) to arrange shipment and to obtain return authorization number.
3. Return your container(s) with appropriate tags and Bill of Lading/Return Authorization forms to the designated DuPont return location.
4. Fax a copy of RA form to DuPont return facility.

NOTE: As the shipper of record, you are responsible to ensure that the shipment complies with all DOT regulations.

TRANE

General Service Bulletin

CVHE-SB-48A

Library	**Service Literature**
Product Section	**Refrigeration**
Product	**Centrifugal Liquid Chillers**
Model	**CVHE/F/G**
Literature Type	**General Service Bulletin**
Sequence	**48A**
Date	**January 15, 1999**
Supersedes	

Revision History: CVHE-SB-48 - Original issue March 25, 1998
CVHE-SB-48A - January 15, 1999

This is an informational bulletin only.

Subject: New Shipping Containers for Refrigerant R-123

Introduction:

Beginning May 1, 1998, all domestic centrifugal refrigerant releases will ship R-123 in new returnable cylinders. These cylinders will be available in two sizes, 200 lb. and 50 lbs. rather that the former drums which held 200 lb. and 100 lbs. of refrigerant. This bulletin describes the cylinders and explains the return procedure to be followed by the Service Company.

Units Affected:

All domestic low pressure centrifugal units using refrigerant R-123 that have refrigerant released after August 10, 1998.

Background

Trane has been working with its refrigerant supplier, DuPont, for several years to develop a returnable R-123 cylinder to replace refrigerant drums. Numerous field complaints associated with drums was the reason for this project, primarily leakage and disposal issues. Also, drums could not be subjected to a deep vacuum without collapsing. These issues are resolved with the new refrigerant cylinders.

Discussion:

A drawing of the new refrigerant cylinders is shown in Figure 1. The 50-lb. cylinder is actually a 100-lb. cylinder charged with 50-lbs. of R-123. Both cylinders are the same outside diameter but different height (See Table 1).

Since the Trane Company has a policy of continuous product improvement, it reserves the right to change specifications and design without notice. The installation and servicing of the equipment referred to in this booklet should be done by qualified, experienced technicians.

©American Standard Inc. 1999

FIGURE 1
New DuPont Refrigerant Cylinder

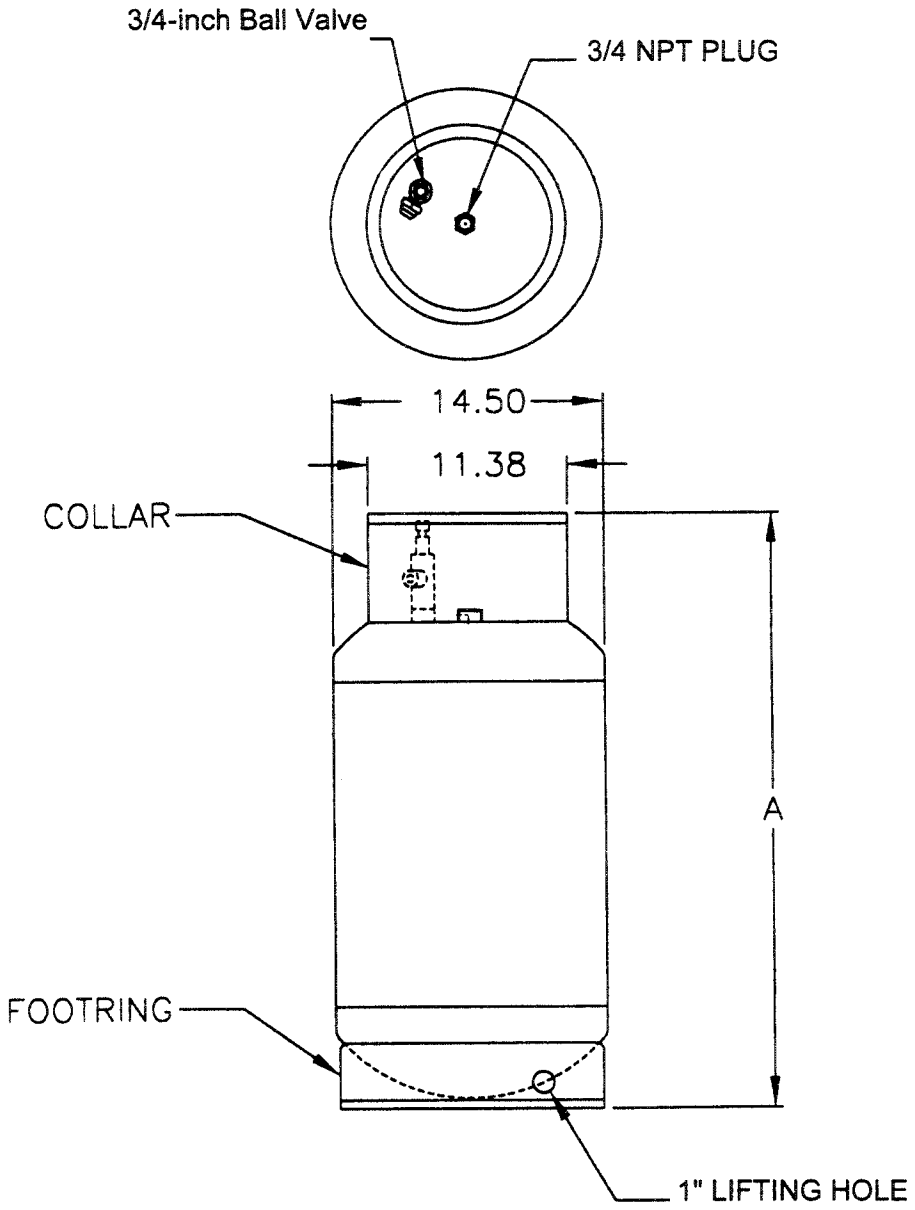

TABLE 1			
EXT	CHARGE	A	TARE WT
01	50#	22.5	40#
02	200#	37.8	60#

A 3/4-inch ball valve with 5/8 refrigerant flare fitting is attached to the top of the cylinders to allow product unloading. The flare fitting can be removed which allows any 3/4-inch male pipe fitting to be used if a flare is not suitable for a particular application. A one-inch hole is provided in the foot ring to allow a lifting hook to be used for hoisting the cylinder for unloading. These cylinders were designed to allow refrigerant transfer at a rate as good or better than the former drums when using the gravity feed method of charging. If heat is to be applied to the cylinder, use a warm water bath or heat blankets. Do not allow the temperature to exceed 150 deg. F. Never use a direct flame on any portion of the cylinder. A 3/4-inch pipe fitting located in the center of the cylinder top is plugged. This plug is not designed to be removed and should be considered permanent. The new cylinders are marked "For R-123 Use Only".

These cylinders do not require a deposit but must be returned to DuPont within 180 days of shipment. If the service company decides they want to keep the cylinders, or if the cylinders are not returned within 6 months of shipment, a one time charge of $150.00 per cylinder will be assessed to the service company by Trane headquarters. To minimize rental charges by DuPont, refrigerant should not be ordered to the jobsite unitl shortly before needed. Return the cylinders promptly after unloading the refrigerant. Be sure to replace all caps on the valve assembly before returning the cylinders. DuPont will provide each domestic sales office with the required forms and paperwork required to return the cylinders. If additional forms are required or questions on the procedure arise, call **DuPont Customer Service Representative, Maureen Ranegan at (800) 441-9286.** All of the details associated with the return of the cylinders are covered in the DuPont instructions, which follow.

Attachment

TRANE®

General Service Bulletin

CVHE-SB-48C

Library	**Service Literature**
Product Section	**Refrigeration**
Product	**Centrifugal Liquid Chillers**
Model	**CVHE/F/G**
Literature Type	**General Service Bulletin**
Sequence	**48C**
Date	**May 8, 2001**
File No.	**CVHE-SB-48C 5/8/01**
Supersedes	**CVHE-SB-48B 2/1/00**

Revision History: CVHE-SB-48 - Original issue March 25, 1998
CVHE-SB-48A - January 15, 1999 changed "Units Affected" and page 3, 2nd Paragraph
CVHE-SB-48B - February 1, 2000 - Revised Return procedures.
CVHE-SB-48C - May 8, 2001 - Returnable Containers Redesign

Subject: Returnable Containers for Refrigerant R123 This is an informational bulletin only

Introduction:

Beginning August 10, 1998, all domestic centrifugal refrigerant releases began shipping R123 in new returnable cylinders **except** for Alaska, Canada and Hawaii who still receive R123 in drums. These cylinders are available in two sizes, 50-pounds. and 200-pounds, rather than the former drums which held 100-p ounds. and 200-pounds of refrigerant. (See Figure 1.) This bulletin describes the cylinders and explains th e return procedure to be followed by the Service Company.

Requirements:

Service offices will not be liable for cylinder deposits after a set time period. Instead, service o ffices will be expected to return cylinders after the chiller has been charged. **Non-compliance by individual offices will result in cylinder deposit invoicing by LBU.** The use of Empty Cylinder tags is no longer required. Field service offices now must call **LBU Technical Services**, not Du Pont, for required forms. In addition, return paperwork must be faxed to **LBU Order Services** for accurate crediting of returned cylinders. These numbers are referenced below for your convenience.

LBU Technical Services Telephone number : 608-787-5305
LBU Order Services Fax number: 608-787-3265

Since the Trane Company has a policy of continuous product improvement, it reserves the right to change specifications and design without notice. The installation and servicing of the equipment referred to in this booklet should be done by qualified, experienced technicians.

Units Affected:

All domestic low pressure centrifugal units using refrigerant R123 that have refrigerant released af ter August 10, 1998. (Exceptions are Hawaii, Alaska and Canada.)

Background:

Trane has worked with its refrigerant supplier, DuPont, to develop a returnable R123 cylinder to re place refrigerant drums. Numerous field complaints associated with drums was the reason for this project, (primarily leakage and disposal issues). Also, drums could not be subjected to a deep vacuum without collapsing . These issues are resolved with the new refrigerant cylinders. Dip tubes have been added to the cylinder fl eet and will be available to the field in May 2001.

Discussion:

A drawing of the new refrigerant cylinders is shown in Figure 1. The 50-pound cylinder is actually a 100-pound cylinder charged with 50-pounds of R123. Both cylinders are the same outside diameter but different height (See Table 1).

Two ball valves are attached to the top of the cylinders to allow product unloading. The flare fitti ng on the vapor valve can be removed which allows any 3/4-inch male pipe fitting to be used if the provided 5/ 8-inch flare fitting is not suitable. A one-inch hole is provided in the foot ring to allow a lifting hook to be used for hoisting the cylinder for gravity method unloading. If heat is to be applied to the cylinder, use a warm water bath or heat blankets. Do not allow the temperature to exceed 150 ° F. Never use a direct flame on any portion of the cylinder. Do not remove the valves for any reason. To avoid potential back strains from inver ting cylinders, the push-pull method is recommended through use of the dip tube.

Note: A "T" handled service tool (TOLO1251) has been developed to permit operating the ball valve stems through the collar openings. The cost is around $25.

A charging procedure which is known to give fast unloading times (4 to 6 minutes per 200-pound cyli nder) is outlined below.

Recommended Charging Procedure

1. Drain water from evaporator or circulate water while breaking vacuum. This is the most important step of all. Try to have the installer do this after he has leak tested the water side of s ystem or put a drain hose on when checking vacuum rise test. Breaking vacuum is not necessary if the evapor ator is properly drained.

2. Using a set up for push-pull unloading, run a hose from the liquid valve to the unit evaporator charging valve. Run a hose from the vapor valve to the exhaust connection of a vacuum pump. Run a hose from the intake side of the vacuum pump to the 3/4-inch ball valve located under the chiller suction elbow.

©American Standard Inc. 2001

3. For the first cylinder only, open the evaporator ball valve and then the cylinder liquid valve lo cated in the center on the top. After a few minutes, open the suction elbow valve and start the pump. Open the vapor valve. As there is initially no refrigerant vapor in the chiller, you can't pull vapor pressure from the unit.

4. When empty, stop the pump, close both cylinder valves, and close off the valve on the line to the evaporator. Disconnect hoses from cylinder, replace all valve caps and hook up the nex t cylinder.

5. Unloading of each cylinder using push-pull method will get progressively faster, whereas with the gravity method, it gets slower.

6. When finished with unloading, be sure to replace the 5/8-inch fitting on the vapor valves (if the y were removed) as well as any caps.

These cylinders do not require an initial deposit but must be returned to DuPont after unloading. If LBU decides that an office is not making an effort to return cylinders, a one-time charge of $150.00 per cylinder will be assessed to the service company by Trane headquarters. Some loss of cylinders due to theft or con tractor negligence is expected. Service companies will not be held liable for occasional losses of cylinders , provided the number is small. Return the cylinders promptly after unloading the refrigerant. LBU will provide each domestic sales office with the required forms and paperwork required to return the cylinders. If que stions on the procedure arise, call **Jeanette Dickerson of Trane LBU Order Services, 608-787-2635.**

Figure 1
DuPont Refrigerant Cylinder

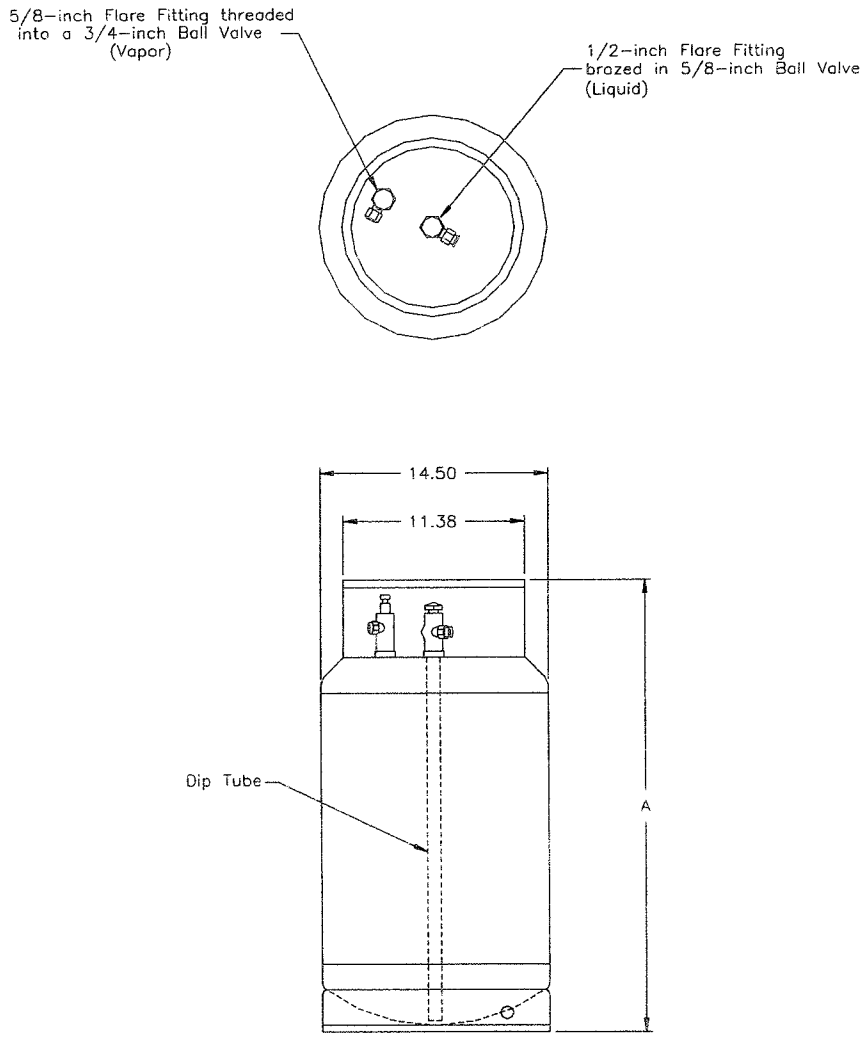

Table 1			
EXT	CHARGE	A	TARE WT
01	50-pounds	22.5	40-pounds
02	200-pounds	37.8	61-pounds

Attachments: (2)
"Procedures for Returning Suva® 123 Empty Cylinders"
"Procedures for Returning Suva® 123 (Defective and Full Product Container)"

TRANE

Service Bulletin

CVHE-SB-49

Library	Service Literature
Product Section	Refrigeration
Product	Centrifugal Liquid Chillers
Model	CVHE/F/G and CDHF
Literature Type	General Service Bulletin
Sequence	49
Date	June 10, 1998
File No.	SV-RF-CTV-CVHE-SB-49-698
Supersedes	New

Subject: CVHE/F/G and CDHF General Guidelines for Oil Analyses and Recommended Oil Changes

Introduction:

This is an informational Service Bulletin concerning the recommended timing intervals for doing oil analysis and oil changes on new chillers.

Discussion:

The following recommendations will be incorporated in the next Operation and Maintenance Manual (CVHE-OM-8). Following these recommendations should reduce the chillers overall lifetime oil consumption and minimize refrigerant emissions. The oil analysis should be performed by a qualified laboratory experienced in refrigerant and oil chemistry and the servicing of Trane Centrifugal Chillers. In conjunction with other diagnostics performed by a qualified service technician, oil analysis can provide valuable information on the performance of the chiller to help minimize operating and maintenance costs.

Recommended Action:

- After the first six months of operation it is recommended to have an oil analysis done.
- After one year of operation it is recommended to change the oil and filter and have the removed waste oil analyzed.
- Beyond the first year, recommendations are to subscribe to an annual oil analysis program rather than automatically changing the oil each year.

Labor, Material and Travel Authorization:

This is an informational bulletin only and there is no labor, material or travel authorized.

Since the Trane Company has a policy of continuous product improvement, it reserves the right to change specifications and design without notice. The installation and servicing of the equipment referred to in this booklet should be done by qualified, experienced technicians.

©American Standard Inc. 1998

TRANE™

Service Bulletin

CVHE-SB-50

Library	Service Literature
Product Section	Refrigeration
Product	Centrifugal Liquid Chiller, Water-Cooled
Model	CVHE/CVHF/CVHG
Literature Type	General Service Bulletin
Sequence	50
Date	March 16, 1999
File No.	SV-RF-CVHE-SB-50
Supersedes	New

Literature History: Original issue of CVHE-SB-50, March 16, 1999

Subject: New Oil Regulator Block Assembly

Introduction:

This is to advise Trane Service Companies of possible defects in the new oil regulator block assembly. A number of chillers have shipped with a possible weak oil regulator spring and defective oil regulator block assembly. Two situations can occur while operating the chiller. First, with a weak spring the operator may not be able to adjust the oil pressure properly. Secondly, the regulator block may have a sharp-machined surface located in the oil regulator block bore, causing damage to the regulator diaphragm and a reduction in oil pressure.

Units Affected:

CVHE/F/G units manufactured the first quarter of 1999. A separate "E" mail was sent to each office listing the affected units in their service area. Service companies who did not receive a "E" Mail notice do not have units affected in their area.

Production Changes:

No production changes are required.

©American Standard Inc. 1999

Since the Trane Company has a policy of continuous product improvement, it reserves the right to change specifications and design without notice. Qualified, experienced technicians should do the installation and servicing of the equipment referred to in this booklet.

Corrective Action:

A number of chillers have shipped with the defective oil regulator blocks (a machined surface with a sharp edge located in the oil regulator block bore and with a weak regulator spring). The oil regulator block assembly and oil filter should be changed out before commissioning the chiller for service. It is recommended that the oil regulator block assembly and filter change out be performed during normal start up or even earlier.

Parts Order Information:

Order one each of the following parts to retrofit each affected Chiller. These can be ordered through the PRIDE system, La Crosse Service Parts.

KIT06443, New Oil Regulator Block Assembly
FLR01592, Oil Filter

Material Disposition:

The cast iron regulator block itself can be scrapped in the field. The oil regulator, diaphragm assembly and 2-bolt flange must be returned to the attention of Jerry Tripp. Use the following address:

The Trane Company, Manufacturing Plant 2,
Attention: Jerry Tripp, 12W
East Door - 2312 East Avenue South
La Crosse, WI 54601

General Service Bulletin

CVHE-SB-52A

Library	Service Literature
Product Selection	Refrigeration
Product	Centrifugal Liquid Chillers
Model	CVHE/F/G, CDHF/G, CVGF
Literature Type	General Service Bulletin
Sequence	A
Date	August 4, 2000
File No.	SV-RF-CTV-CVHE-SB-52A-800
Supersedes	SV-RF-CTV-CVHE-SB-52-899

Subject: Solid State Starter (Inside the Delta) Service Manual

Introduction:

The purpose of this bulletin is to provide troubleshooting and replacement information for the SMC-DP (Smart Motor Control Definite Purpose) solid state starter used on CVHE/F/G, CDHF/G, CVGF units.

IMPORTANT!
TO PREVENT INJURY OR DEATH DUE TO ELECTRICAL SHOCK, FOLLOW THE WARNINGS PROVIDED THROUGHOUT THIS MANUAL REGARDING HAZARDOUS VOLTAGE WHEN SERVICING.

Related Documents:

CTV-TS-22	Solid State Starter, Inside the Delta
CON-AM-23 (888)	Application Engineering Manual, CENTRAVAC® Motor Starters
EB XXX	CenTraVac® Motor Starter Power Quality Requirements

Discussion:

The SMC-DP is designed to start the chiller slowly at a reduced torque and current. A starter consists of an SMC-DP control module, a MOV (Metal Oxide Varistor) transient voltage protection package, 3 power poles or SCR's (Silicone Controlled Rectifier), a bypass contactor (2K2) and a starting contactor (2K1). This is a reduced voltage starter that controls starting characteristics of the CenTraVac motor by controlling the voltage applied to the motor. The SMC-DP operates inside the delta of the motor windings and utilizes a microprocessor to analyze the feedback voltage from the motor to determine CenTraVac motor up to speed.

Corrective Action:

Several procedures are listed to assist in determining which component of the starter has failed.

Component layout:

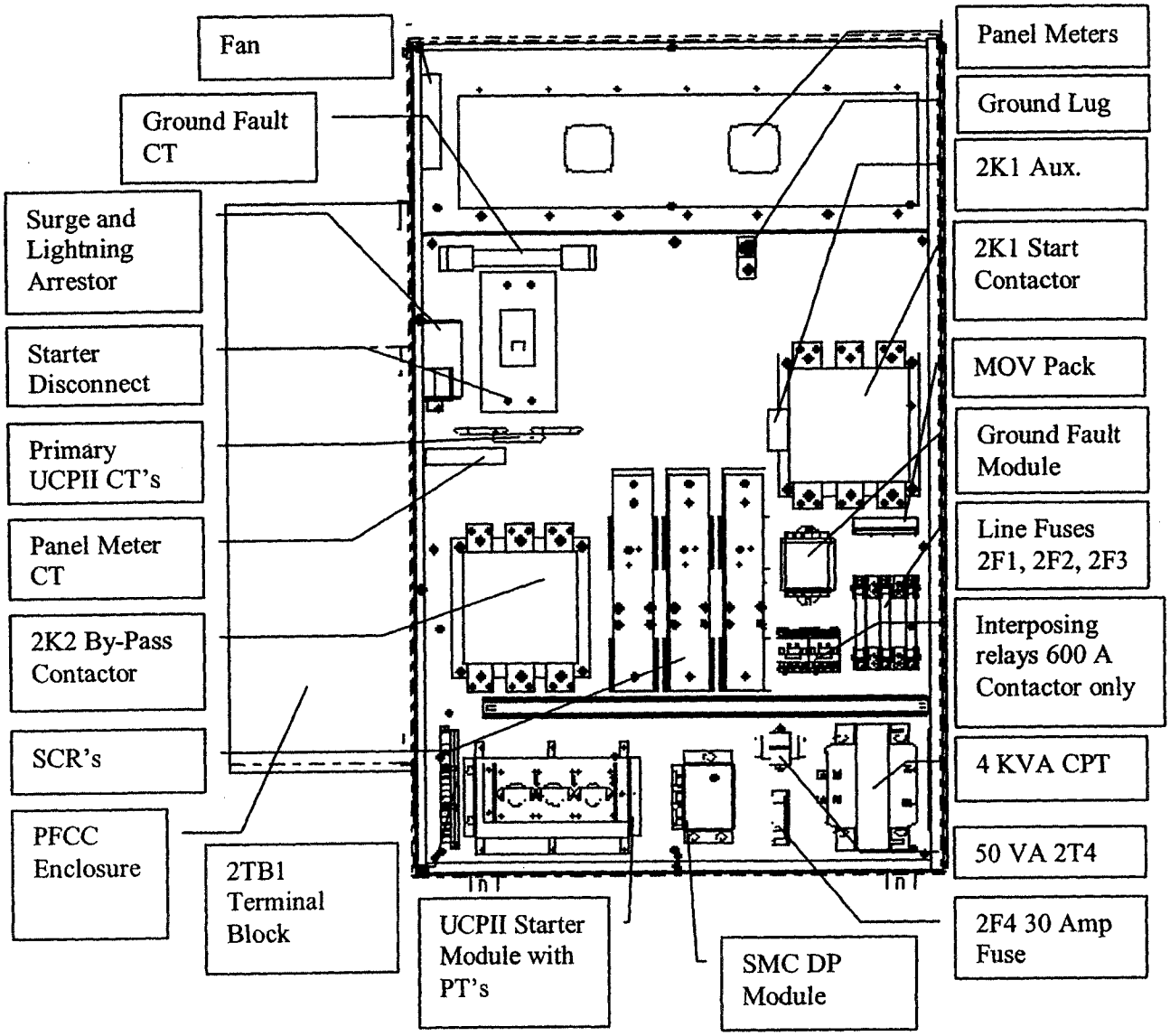

SMC-DP Module adjustments:

The SMC-DP comes pre-set from the factory to an approximate start time of Y-Delta start; no field adjustment is necessary. See appendix "A" for additional adjustment information for slower or faster starting requirements. A faster start draws more inrush current and produces more torque, allowing for a faster starting time.

Initial Check out Procedures:

[ ] Confirm all control voltage is separated from power wiring.
[ ] Confirm all wiring is landed correctly
[ ] Confirm all critical connection are tightened to proper torque

Inspect all starter components for damage, which could be caused by arcing, overheating, and other damage.

Power Pole Check-Out:

⚠ WARNING
HAZARDOUS VOLTAGE
DISCONNECT ALL ELECTRICAL POWER BEFORE SERVICING. FAILURE TO DISCONNECT POWER BEFORE SERVICING CAN CAUSE SEVERE PERSONAL INJURY OR DEATH.

The entire power pole must be replaced if one or more of the internal components fail the checkout procedure.

1. Disconnect P1, P2 and P3 from the SMC module.
2. Measure resistance across each power pole by measuring across the open 2K2-contactor line load terminals (see below). Resistance must be greater than 10,000 Ohms.
3. Replace any power pole that measures below 10,000 ohms. It is not unusual for the measurements to vary greatly pole to pole.

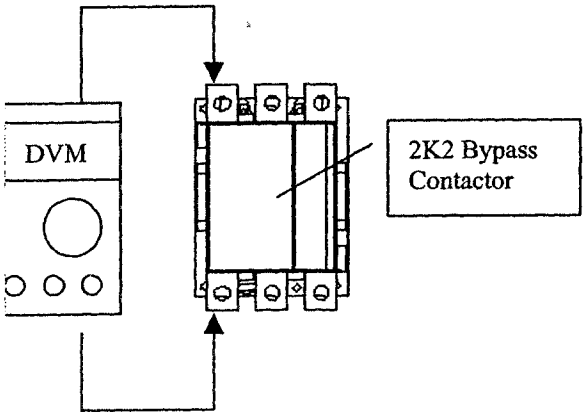

⚠ WARNING
HAZARDOUS VOLTAGE
DISCONNECT ALL ELECTRICAL POWER BEFORE SERVICING. FAILURE TO DISCONNECT POWER BEFORE SERVICING CAN CAUSE SEVERE PERSONAL INJURY OR DEATH.

Starting Sequence Check-Out:

If the compressor is not rotating after a start signal is given and the UCP2 has detected an SMC-DP fault "**Solid State Starter Fault Relay Open**", follow the procedures below to confirm that the SMC-DP is functioning properly. Two DVM's will be needed for this procedure.

1) Check all 3-phase power connections. Confirm phase rotation is ABC.
2) Disconnect all electrical power before servicing. Failure to disconnect power before servicing can cause severe personal injury or death.
3) Disconnect the (6) motor power leads at the motor.
4) Confirm that the problem is not in the motor (Meg the compressor motor).
5) Reconnect motor power leads, close the disconnect and confirm three-phase voltage is present at the starter disconnect and input terminals to starting contactor (2K1). Voltage should be rated voltage +/- 10%.
6) Confirm that P1, P2 and P3 are connected in proper order to SMC-DP module. Incorrect sequence will prevent start.

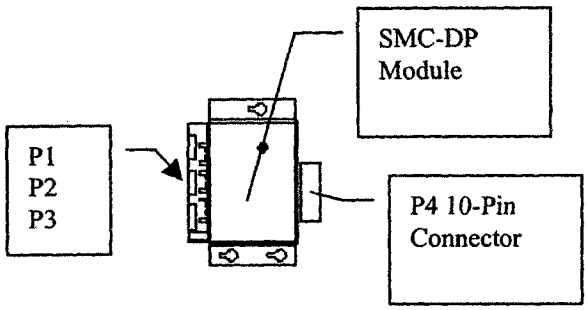

7) Confirm operation of start relay and fault relay state on SMC-DP board.

   a) Measure voltage at terminals P4 7 and 1 (2K1 coil relay 115 volts) of the SMC board during start.

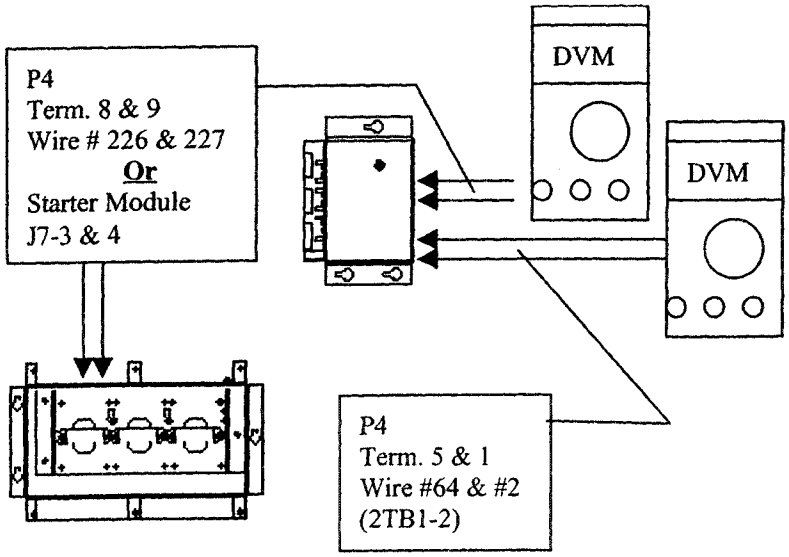

b) Measure fault relay state on starter module J7-3, 4 (contact closure) during start. Relay will open if a fault condition exists.
c) Assure continuity between SMC board (P4 1 & 7) and contactor coil (A1 & A2).
d) Initiate start command from UCP2. Compressor motor should start.
e) Note: for a 600-amp contactor an interposing relay is installed to drive the 600-amp contactor coil. Verify 2K2-coil control voltage is present at contactor coil terminals A1 & A2.

8) If 115 volts is present and contactor fails to operate replace contactor/ coil.
9) If 115 volts is present and contactor operates, inspect condition of contacts. If contacts are damaged, replace contacts.
10) If 115 volts is not present prior to a fault relay open, replace SMC-DP module.

By-Pass Sequence Check-Out:

If the compressor rotates after start signal is given but fails to reach full speed, by-pass contactor (2K2) failed to pull-in, and the UCP2 has detected an SMC-DP fault **"Solid State Starter Fault Relay Open"**, follow the procedures below to confirm that the SMC-DP is functioning properly.

1) Confirm line current drawn during start is 58%+5/ -10% of motor locked rotor current. Current greater than this value may indicate motor problem, current less than this may indicate motor problem or low voltage (less than 90%) condition. Refer to Appendix B for time start adjustment.

2) Confirm operation of by-pass relay and fault relay state on SMC-DP board.

a) Measure voltage at terminals P4 5 and 1 (2K2-coil relay 115 volts) of the SMC board during start.

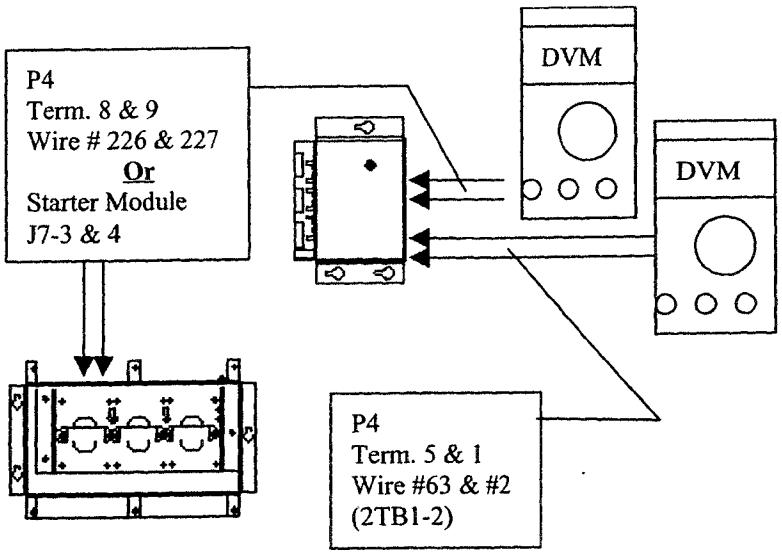

b) Measure fault relay state on starter module J7-3, 4 (contact closure) during start. Relay will open if a fault condition exists.
c) Assure continuity between SMC board (P4 1 & 5) and contactor coil (A1 & A2).

d) Note: for a 600-amp contactor an interposing relay is installed to drive the 600-amp contactor coil. Verify 2K2-coil control voltage is present at contactor coil terminals A1 & A2.
e) Initiate start command from UCP2. Compressor motor should start.

3) If 115 volts is present and contactor fails to operate replace contactor/ coil.
4) If 115 volts is present and contactor operates, inspect condition of contacts. If contacts are damaged, replace contacts.
5) If 115 volts is not present prior to fault relay open, replace SMC-DP module.
6) If contactor is confirmed to be good, check that P1, P2 and P3 are connected firmly in the SMC-DP module. Loose connections may cause faulty firing forcing the unit to shut down.
7) Refer to power pole section and check SCR's. If SCR are shorted, replace power pole.

MOV Pack Check-Out:

⚠ WARNING
HAZARDOUS VOLTAGE
DISCONNECT ALL ELECTRICAL POWER BEFORE SERVICING. FAILURE TO DISCONNECT POWER BEFORE SERVICING CAN CAUSE SEVERE PERSONAL INJURY OR DEATH.

The part new has a clear potting material. This part has a limited life and should be checked every year during general starter inspection. If this potting material is cloudy or turning brown, this part should be replaced. A slight discoloration is an indicator that the MOV pack is starting to fail. A dark brown or black color is an indication that the part failed.

SMC-DP Low Line Detection Fault:

Symptom (failure)
If the compressor rotates after start signal is given but fails to reach full speed, by-pass contactor (2K2) failed to pull-in, and the UCP2 has detected an SMC-DP fault "Solid State Starter Fault Relay Open" or UCP2 has issued an MMR "Phase Loss" or "Phase Reversal". All of the previous starter checks along with the phasing of the CT's must be verified before proceeding.

Background
Motors started with solid state starters will inherently draw a larger % of LRAD during start compared to wye-delta. This is due to the physics of the solid state starter applied to a delta configured motor. The SCR's start and ramp the motor to rated speed. For comparison a motor started with a wye-delta starter will pull 100% of LRAY or about 33% of LRAD to achieve at speed in a certain amount of time then transition to delta. This same motor started with a solid state starter will pull between 58-62% of LRAD (with default setting) to achieve at speed in the same time as the wye-delta motor starter. These are equivalent torque starts.

Problem
This elevated current may cause a significant line to line RMS voltage sag. This is realized most often by an engine/ steam driven alternator (generator) power circuit that has a high source impedance. The solid state starter may interpret this voltage waveform as a "power supply failure" and initiate a safe shutdown. This "power supply failure" protection was installed for early detection that a power supply would be lost. The maximum sag usually occurs in the first 2 to 23 line cycles of current when the solid state starter is ramping voltage. The motor will draw peak current during this voltage ramp.

Solution

This sensing circuit ("power supply failure") can be disabled and safely start the motor and operate the starter. By disabling this circuit the starter is allowed to operate safely with a greater line to line RMS voltage sag (Maximum sag of 25% of the line to line RMS rated voltage). The motor can safely operate here, however motor acceleration is not guaranteed. See Appendix A for starter modifications. These modifications should only be done if the failure is described in the symptom section above.

Solid state starters also have the ability to change the current inrush profile. The starting profile is set default to a 58-degree notch and is adjustable between 35 and 76 degrees. The larger the notch the lower the peak inrush and the longer the start time. By reducing the peak inrush the voltage sag can also be reduced. See Appendix B for notch adjustment.

Trane recommends that the notch adjustment be raised first to remedy the "Power supply failure" fault see Appendix B for notch adjustment. If raising the notch does not remedy the "Power supply failure" fault or the chiller compressor motor fails to accelerate fully then disable the "Power supply failure" detection circuit. See Appendix B to disable sensing circuit. It is recommended, after the sensing circuit is disabled, that the notch be returned to a setting that will guarantee that the chiller compressor motor will accelerate fully.

Appendix A

Solid State Starter Modifications:



If installed SMC-DP board is **FRN T5.1**:

1) An upgrade kit must be ordered kit # 150DP-FRN52KIT which contains:
   - SMC-DP module; FRN T5.2
   - Auxiliary relay PN 195-GA20
   - #14 AWG wire

2) Replace SMC-DP FRN T5.1 module with **FRN T5.2**

3) Move Switch #8 on SMC-DP board to **"ON"** position (pull SW#8, far left, toward you when mounted inside of starter)

4) Replace installed 2K1 auxiliary relay (1) NO contact with provided relay PN 195-GA20; (2) NO contacts. Re-install wire #8 & #9. Wire second 2K1 Aux NO contact between 2U2 pin #3 (wire #72) and 2U1 J6-1 (wire #61) with

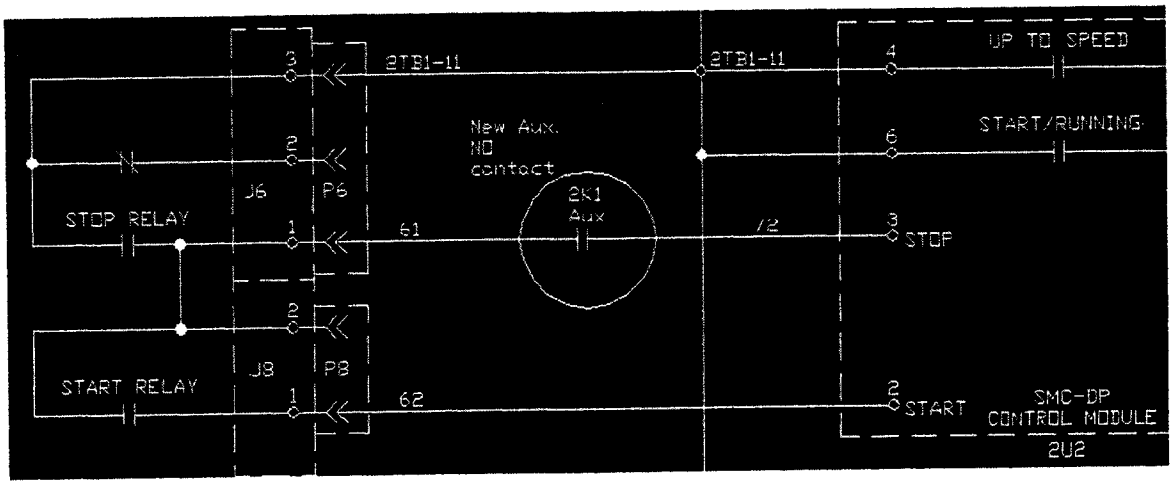

provided #14 AWG wire. Label wiring per schematic. Ty wrap control circuit to existing control wire bundle. The purpose of this relay is to prevent contactor chatter.

5) Mark-up starter schematics fastened to the starter door with the above control changes

6) **RETURN THE FRN T5.1 SMC-DP MODULE TO:**

Rockwell Automation
1201 South Second Street
Milwaukee, WI 53204
Attn: Victoria Alia, Bay 3-V21

**Package the SMC-DP module in the same container that the new module was shipped in.

Mark package with the following

- Office
- Job Name
- Unit serial number
- Chiller sales order #

If the SMC-DP board is marked as FRN T5.2 this board and starter already have the capability of disabling the sensing circuit. SW#8 will only need to be turned to the "ON" position in order to disable circuit.

Appendix B

Variable Torque Setting:

The following table lists the adjustments available on the SMC-DP module. Remove the black cover label located on the side of the SMC-DP module to gain access to eight-position dip switch. These switches are factory set to allow approximately equivalent Wye-Delta starting torque (inrush current of 58-62% of LRA). There are eight switches available, Switch 1, 2, & 3 are used for this adjustment. Switches 4,5,6, & 7 are rendered useless. Possible adjustments listed below:

SW 3	SW 2	SW 1	"Notch"	Approx. % peak LRAD
Off	Off	Off	35	70
Off	Off	On	45	67
Off	On	Off	50	65
Off	On	On	58 – Default	63
On	Off	Off	63	58
On	Off	On	66	56
On	On	Off	70	52
On	On	On	76	45

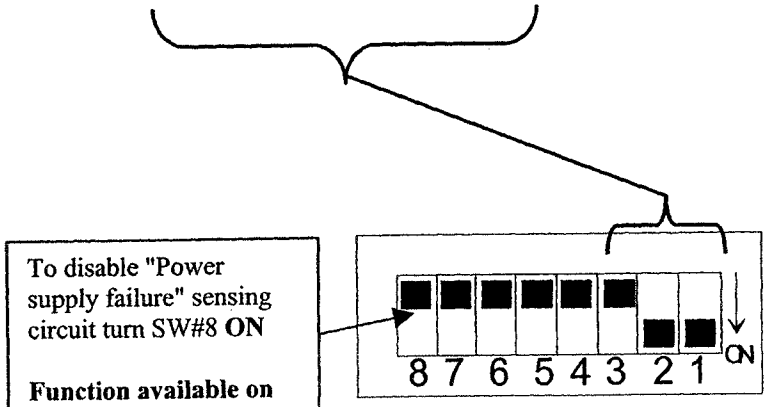

To disable "Power supply failure" sensing circuit turn SW#8 **ON**

Function available on SMC-DP FRN T5.2 boards only

Note: Starting torque will increase as "Notch" is decreased. Inrush current increases as "Notch" is decreased (start time is shortened).

Appendix C

Supplementary Troubleshooting Table

⚠ WARNING
HAZARDOUS VOLTAGE
DISCONNECT ALL ELECTRICAL POWER BEFORE SERVICING. FAILURE TO DISCONNECT POWER BEFORE SERVICING CAN CAUSE SEVERE PERSONAL INJURY OR DEATH.

SMC-DP issues a **"Solid State Starter Fault Relay Open"** fault to UCP2.

Symptom	Possible Problem	Solution
Motor fails to start	Phase loss	Check connections to SMC, confirm that three phase power is present in panel
	Lost Motor Connection	Check motor and contactor connections for looseness
	Miswired SCR control connections	Check P1,P2 and P3 that they are in proper order on the SMC-DP control module
	Voltage sag	Turn on SW#8 to disable "power supply failure". Must have FRN T5.2 SMC-DP module
Starting contactor fails to close	Failed Starting Contactor (2K1)	Confirm operation of start relay on SMC-DP board. Initiate start command from UCP2. If start contactor (2K1) fails to close, prior to fault relay open, confirm 115 volt source by measuring voltage at terminals 7 and 1 (2K1 coil relay) of the SMC board and the fault relay contact on starter module J7-3, 4. If 115 volts is present and contactor fails to operate replace contactor.
	Failed contacts	If 115 volts is present and contactor operates, inspect condition of contacts. If contacts are damaged, replace contacts.
	Failed SMC-DP module	If 115 volts is not present prior to a fault relay open, replace SMC-DP module.

Continued

Motor Attempts to Start, But aborts before bypass attempts to close	Shorted SCR	Perform continuity check across the power poles with P1, P2, and P3 connection removed. Measurements should exceed 10K for good power pole
	Failed Bypass contactor (2K2)	Confirm operation of bypass relay on SMC-DP board, prior to fault relay open, during a start-up. Confirm 115-volt source by measuring voltage at terminals 5 and 1 (2K2-coil relay) of the SMC board and the fault relay contact on starter module J7-3, 4. If 115 volts is present and contactor fails to operate replace contactor.
	Failed contacts	If 115 volts is present and contactor operates, inspect condition of contacts. If contacts are damaged, replace contacts.
	Failed SMC-DP module	If 115 volts is not present prior to fault relay open, replace SMC-DP module.
	Erratic firing of SCR's	Check P1, P2, P3 connection on SMC-DP control board for looseness.
	If none of the above	Replace SMC-DP control module
Motor starts, accelerates to full speed, bypass closes then opens	Bad bypass control relay on SMC-DP board	Replace SMC-DP control board.

TRANE™

General Service Bulletin

CVHE-SB-53

Library	Service Literature
Product Section	Refrigeration
Product	Centrifugal Liquid Chiller, Water-Cooled
Model	CVHE/CVHF/CVHG
Literature Type	General Service Bulletin
Sequence	53
Date	June 21, 1999
File No.	SV-RF-CVHE-SB-53
Supersedes	New

Subject: CenTraVac® AFDB Water Cooled Inverter R035 and R036 Drive Settings

Introduction:

Initial production AFDB (water cooled inverters) have two of the drive setup parameters (R035 and R036) programmed incorrectly. R035 and R036 are actually reversed.

The purpose of this bulletin is to inform Trane Service Companies of the problem. Please note that this applies to a small number of 1st production units, some of which have been corrected at startup by your service technicians or prior to shipment.

Discussion:

Relay 1, (drive in run), and Relay 2, (at speed), on the drive mounted RMI board are programmed incorrectly. Relay 1, designated as "drive in run" on terminals 55 and 56, is incorrectly programmed to close when the drive is "at speed". Likewise Relay 2, designated as "at speed" on terminals 52 and 53, is incorrectly programmed to close when the drive is running (drive in run). Relay 1 is the backup system to engage the interposing relay, "2K1, K1", to run the oil pump in the event the UCP2 control system malfunctions.

©American Standard Inc. 1999

Since the Trane Company has a policy of continuous product improvement, it reserves the right to change specifications and design without notice. Qualified, experienced technicians should do the installation and servicing of the equipment referred to in this booklet.

Units Affected:

This bulletin applies to all initial production units with ship dates between July 1998 through June 1999.

Production Changes:

No production changes. As of July 1, 1999 the units have been programmed correctly.

Corrective Action:

1. Stop the drive.

2. Press the PROGRAM key, then press the UP or DOWN arrow until (R___) is displayed.

3. Press enter until (R000) is displayed.

4. Press the UP arrow key until (R035) is displayed and press ENTER. A "1" should be displayed, if the **incorrect** number is programmed. (We actually want "9" to be displayed, so if a "9" does come up the drive is programmed properly.)

5. Press the UP arrow key until "9" is displayed. This re-configures Relay 1 to close when the drive is "at speed".

6. Press the PROGRAM key once until (R035) is displayed again.

7. Press the PROGRAM key until (R036) is displayed and press ENTER. A "9" should be displayed if the **incorrect** number is installed. We want a "1" displayed when correctly programmed.

8. Press the DOWN arrow until "1" is displayed for the "drive run" setting, and press ENTER. This re-configures Relay 2 to close when the drive is running "drive run".

9. After the above steps have been completed, press the Program key until "0" is displayed. The drive is ready to start.

General Service Bulletin

CVHE-SB-54

Library	Service Literature
Product Section	Refrigeration
Product	Centrifugal Liquid Chillers
Model	CVHE/CVHF/CVHG
Literature Type	General Service Bulletin
Sequence	54
Date	August 6, 1999
File No.	SV-RF-CTV-CVHE-SB-54-899
Supersedes	New

Subject: 3KVA Transformers in Low Voltage Starters Unit Mounted and Remote Mounted on CenTraVac® Chillers

Introduction:

The Cutler-Hammer unit and remote mounted low voltage starters with 3KVA transformers, produced from March 1999 through June 1999, have a potential for the weld to break loose from the bracket and the transformer falls.

The intent of this service bulletin is to inform you of the problem and request that you send a service technician to the job site to disconnect the transformer wires, install a bolt if it does not already have one on the bracket, and reconnect the 3KVA transformer wiring.

IMPORTANT!
TO PREVENT INJURY OR DEATH DUE TO ELECTRICAL SHOCK, FOLLOW THE WARNINGS PROVIDED IN THIS MANUAL REGARDING HAZARDOUS VOLTAGE WHEN SERVICING.

Since the Trane Company has a policy of continuous product improvement, it reserves the right to change specifications and design without notice. The installation and servicing of the equipment referred to in this booklet should be done by qualified, experienced technicians.

©American Standard Inc. 1999

WARNING

HARZARDOUS VOLTAGE! DISCONNECT ALL ELECTRICAL POWER BEFORE SERVICING. Failure to disconnect power before servicing can cause severe personal injury or death.

CAUTION

TO AVOID DAMAGE TO STARTER COMPONENTS, REMOVE DEBRIS FROM INSIDE THE STARTER PANEL. Failure to do so may cause an electrical short that seriously damages the starter components.

Discussion:

A problem has been discovered on the 3KVA Transformers, manufactured during a limited time period noted above, where the weld breaks loose from the bracket and the 3KVA transformer fails. The problem is a defective weld between the transformer and transformer-mounting bracket. Some of the transformers have been repaired at the starter manufacturing plant prior to shipment, but some have shipped to the field without being repaired.

The new design is a bolt-on design. The purpose of this bulletin is to outline a repair procedure and replace all welded 3KVA transformer brackets on starters. To help identify the defective transformers is a field inspection drawing (Figure 1) showing Bolted Base Design verses Welded Base Design and instructions (Figure 2) for installing the Bolted Bracket assembly.

Recommended Action:

- It should be determined if the transformer is of the Welded Base Design or Bolted Base Design. See Cutler Hammer Sketch SK_060199 shown in Figure 1 to determine which base design was shipped.
- If the starter has a Welded Base Design Transformer, it should be repaired with the Bolted Base Design Bracket Kit. See Figure 2.

Figure 1
Field Inspection for Bolted and Welded Base Design (SK 060199)

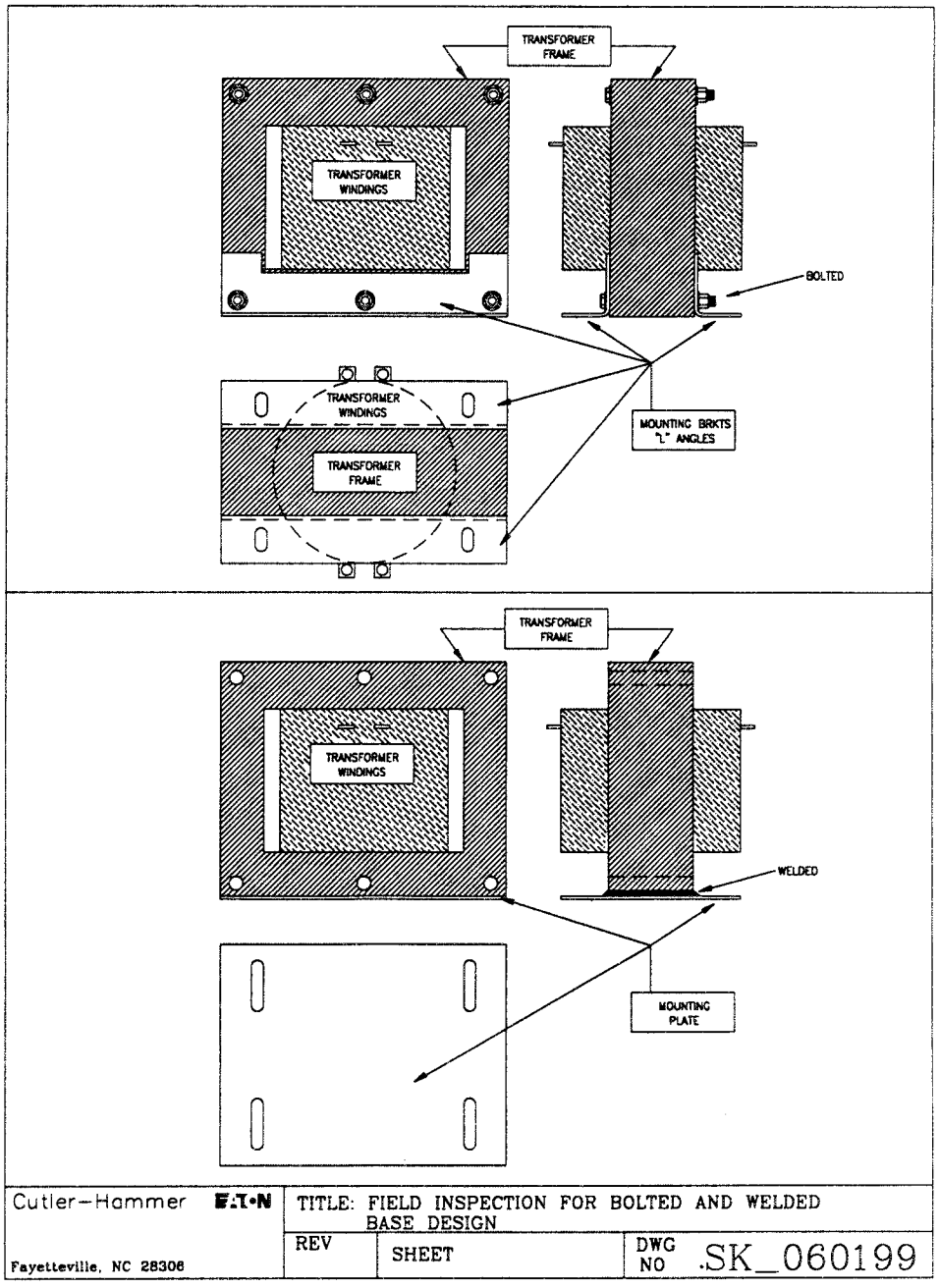

Figure 2
Instructions For Cutler-Hammer Mounting Bracket Assembly

BOLTED BRACKET ASSEMBLY INSTRUCTIONS

NOTE: USE PARTS CONTAINED IN KIT 333-0100.

1) Position 1 bracket on each side of lamination at base of transformer. The long holes in the angle bracket face the back panel of the starter. The 5/8" X 6-1/4" cut out in the angle bracket mounts toward the laminations. Line up holes in bracket with holes in lamination.

2) Assemble a steel split washer and then a nylon shoulder washer to a bolt. (See diagram.) Insert the bolt through the brackets and lamination stack making sure the shoulder washer is seated in the lamination stack. Assemble a second shoulder washer and steel split washer to the threaded side of the bolt making sure the shoulder washer is seated in the lamination stack. Hand-tighten the nut on the bolt.

3) Repeat step 2 for the other side of the transformer.

4) Tighten 2 nuts and bolts to a torque of 12 foot-pounds (2) 7/16" open-ended wrenches.

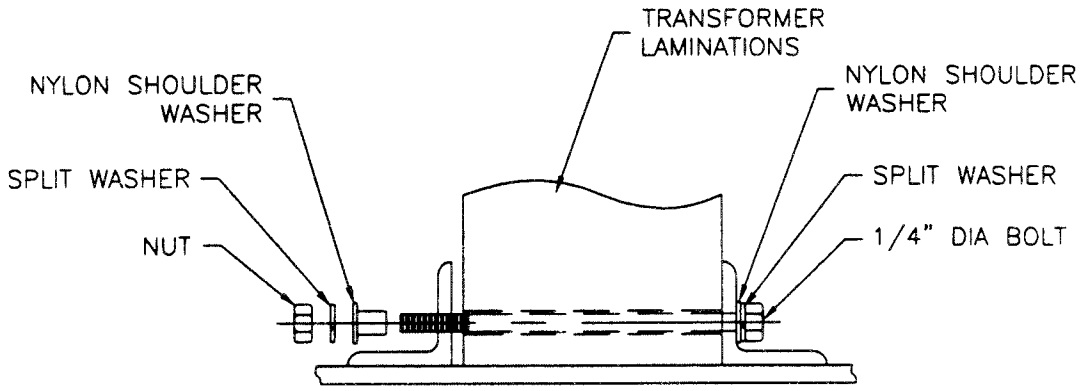

CUTLER HAMMER MOUNTING BRKT ASSEMBLY

TRANE

General Service Bulletin

CVHE-SB-99

Library	Service Literature
Product Section	Refrigeration
Product	Centrifugal Liquid Chiller, Water-Cooled
Model	CVHE/F/G
Literature Type	General Service Bulletin
Sequence	99
Date	November 10, 1998
File No.	SV-RF-CVHE-SB-99-1198
Supersedes	New

Subject: Liquid Cooled Adaptive Frequency™ Drive Start-Up Procedures Form

Introduction:

This service bulletin is for **information only.**

Discussion:

Provided for your use and information, is a copy of the "Pre-Start-Up Checklist and Service Request" form by Rockwell Automation to be used for scheduling factory start-up service when that option is requested.

This form is also located in the most recent Adaptive Frequency Drive manual, **AFDB-OM-1**, published in 1998.

Recommended Action:

Important: To schedule start-up services. Follow the directions on the form carefully and fax the completed form to:

Rockwell Automation – La Crosse, WI FAX: 1-608-781-7182

Since the Trane Company has a policy of continuous product improvement, it reserves the right to change specifications and design without notice. The installation and servicing of the equipment referred to in this booklet should be done by qualified, experienced technicians.

©American Standard, Inc. 1998

Parts Order Information:

No parts are required per this bulletin.

Production Changes:

There are no production changes per this service bulletin.

Units Affected:

All CVHE/F/G CenTraVac® units sold with the Trane Liquid Cooled Adaptive Frequency™ Drive option "Factory Start-Up" by Rockwell.

Attachment

TRANE

Rockwell Automation

START-UP PROCEDURES
TRANE LIQUI-FLO VARIABLE FREQUENCY DRIVE
PRE START-UP CHECKLIST AND SERVICE REQUEST

Use this form to check for proper installation of the Rockwell Automation Liqui-Flo VFD. For start-up service, please fax this completed form to: **Rockwell Automation – LaCrosse, WI FAX: 1-608-781-7182** to schedule start-up. Please allow three weeks to arrange for start-up services.

JOB LOCATION_____INSTALLING CONTRACTOR_____

STREET_____CONTRACTOR CONTACT_____

CITY_____CONTACT PHONE_____

PRE START-UP CHECKLIST

PRIOR TO ROCKWELL AUTOMATION BEING ON SITE, CONFIRM THAT THE FOLLOWING ACTIONS HAVE BEEN COMPLETED (OR WILL BE COMPLETED PRIOR TO THE SCHEDULED START-UP):

	YES
1. The Trane Liqui-Flo VFD is mounted and wired per the CVHE-OM-8 Operation & Maintenance manual and/or wiring diagram (if separately supplied).	☐
2. The A-C primary line voltage is the proper voltage.	☐
3. The Trane chiller is ready to start and operate under load conditions. All preliminary start-up checks have been completed as detailed in the appropriate Installation Operation Maintenance manual, such as (evacuation, charging, all wiring & electrical work, chiller and AFD control settings checked, etc...).	☐
4. The Personnel have been selected to assist the Rockwell Automation service representative with the operation of the equipment and the facility layout.	☐

REQUEST FOR SERVICE REPRESENTATIVE

I acknowledge that all four of the above items have been completed. I understand that if upon job inspection these requirements are not met, no start-up work will be performed and travel time and mileage will be charged at current hourly rates.

NAME _____COMPANY_____

PHONE_____FAX_____

DATE/TIME DESIRED_____ALTERNATE DATE/TIME_____

START-UP SERVICE COVERED BY P.O.#_____

LIQUID COOLED AC

Parts Ordering Information:

- Cutler-Hammer part number 333-0100.
- The Cutler-Hammer Kit 333-0100 can be ordered direct from Cutler-Hammer.
- Reference Service Bulletin CVHE-SB-54 when ordering kits.
- Order From:

  Cutler-Hammer
  4740 Corporation Drive
  Fayetteville NC 28306
  Attn: Ron Mooneyhan, Phone 910-438-0513

Production Changes:

There are no production changes as of this date.

Units Affected:

March 1, 1999 through June 30, 1999.

TRANE®

General Service Bulletin

CVHE

Cutler-Hammer Starters with Freedom Series Sizes 4 and 5 Contactors

ORDER No: CVHE-SVB001-EN DATE: February 21, 2001

Introduction

The purpose of this service bulletin is to advise the Trane Service Companies and Trane Parts Outlets of a problem associated to Cutler-Hammer Y-Delta and Across-the-Line Starters used with the CVHE, CVHF and CVHG chillers. (When retrofitting starters on the Series R chillers refer to RTHC-SVB003-EN, RTHB-SVB003-EN, RTAA-SVB003-EN.)

This is a potential SAFETY HAZARD and corrective action must be taken as soon as possible.

Potential for a safety hazard in some Cutler-Hammer 180mm Wide Contactors and Starters has been discovered. Contactors and Starters possibly involved include: Freedom Series NEMA sizes 4 and 5; Freedom Series IEC size P-S; Definite Purpose 200A-360A; and Electrically Held Lighting contactors rated 200A-300A.

The potential for this hazard is greater in those applications where the contactors or starters are continuously energized for long periods of time (minimum 2 days energized) without being de-energized. The hazard exists when heat on the 2K1 and 2K2 contactor and starter magnet causes material on the magnet surface to polymerize (melt, coating the power head with a fatty acid). This may prevent the contactors and starters from opening when de-energized, thus keeping the motor energized. The problem may occur in the power head of the 2K1-start contactor and the 2K2 run contactor that are size 4 or 5 Freedom contactors.

© 2001 American Standard Inc. All rights reserved.

Discussion:

CVHE, CVHF and CVHG units built between July 1, 2000 and February 12, 2001 may have the contactors in question. The date codes of the affected contactors and starters are from July 1, 2000 (Date Code = C000701) to January 14, 2001 (Date Code - C010114). When facing the front of the contactor, the Date Code appears on a label on the right side of the contactor and is *7* characters in length. The "C" indicates the manufacturing plant, the next two numbers represent the year, the next two numbers are for the month and the final two numbers are the day. See Figure 1.

Figure 1
Identifying Date Code

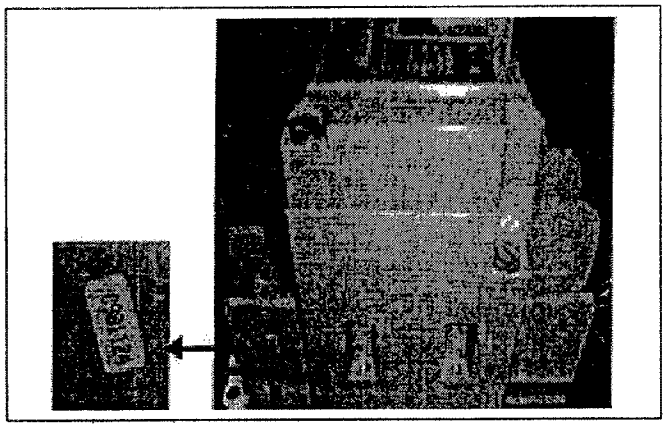

C = Manufacturing plant for all 180mm devices

00 = Year (2000)
08 = Month (August)
03 = Day (Third day of the Month)

Date Code Example: C000803
C 00 08 03

WARNING
IN THE EVENT A CONTACTOR OR STARTER REMAINS ENERGIZED FOR LONG PERIODS, HEAT ON THE 2K1 AND 2K2 CONTACTOR AND STARTER MAGNET CAUSES MATERIAL ON THE MAGNET SURFACE TO MELT AND COAT THE POWER HEAD POSSIBLY PREVENTING THE CONTACTORS AND STARTERS FROM OPENING WHEN DE-ENERGIZED. This occurrence could result in personal injury and property damage if a contactor and starter magnet are not de-energized in less than 48 hours

TRANE

Corrective Action:

Follow the repair procedure listed below.

WARNING:
LOCK UNIT DISCONNECT SWITCH IN OPEN POSITION, failure to do so could cause injury or death due to electrical shock or contact with moving parts.

Repair Procedure:

- Disconnect and lockout power to the starter.
- Identify the 2k1 and 2k2 contactors that need retrofitting.
- Remove contactor cover (2 screws)
- Remove the power head (2 screws)
- Install new power head (2 screws)
- Install cover (2 screws)

Close starter panel-door and restore power to starter.
Average time for changeout per contactor is 5 to 10 minutes.

Units Affected

The 2K1 and 2K2 contactors have a date code on the side of each contactor. Contactors that apply and need the retrofit have a date code from July 1, 2000 to January 14, 2001. Contactors that have a date code starting with F01 and later do not require the retrofit. ***(F = new manufacturing plant, see Date Code Example.)***

Parts Information

Refer to the Table 1 for necessary parts.

Note: One Power Head is required per contactor, two (per) starter.

Table 1: Parts Required

Description	***Quantity***	***Part Number***
Power Head Size 4	2	HED00624
Power Head Size 5	2	HED00625

Material Disposition

Scrap in the field. Do not reuse power head.

Literature Order Number	CVHE-SVB001-EN
File Number	SV-RF-CTV-CVHE-SVB001-EN-2/21/01
Supersedes	New
Stocking Location	Inland

Since The Trane Company has a policy of continuous product and product data improvement, it reserves the right to change design and specifications without notice. Only qualified technicians should perform the installation and servicing of equipment referred to in this publication.

TRANE®

General Service Bulletin

Sticking 1K5 Oil/Refrigerant Pump Motor Relays

CVHE, CVHF, CVHG, CDHF and CDHG

Order No: CVHE-SVB02A-EN July 12, 2001

Introduction

We have had reports of sticking 1K5 oil/refrigerant pump relays on all direct drive centrifugal chillers. Models affected are CVHE, CVHF, CVHG, CDHF and CDHG. This bulletin describes the action to take if a sticking relay is found.

Discussion

The original 1K5 relay for the oil/refrigerant pump motor was an Allen Bradley 1 hp, 120 volt relay, part number 700HHF62A1. This relay has had a history of sticking in the closed position, which causes the oil/refrigerant pump motor to stay energized even when the chiller shuts down. This in turn will cause the chiller to lock out on an MMR diagnostic of "Oil Pressure Sensor Calibration" due to the fact that the oil pump is running when the chiller thinks it is off. Thus, the 3 psid pressure differential between oil supply and oil sump pressures is exceeded after 5 minutes of shutdown and the machine will lock out on the calibration diagnostic.

© 2001 American Standard Inc. All rights reserved.

Corrective Action

To correct the problem of a sticking 1K5 relay, a new Cutler-Hammer 1.5 hp, 120 volt relay, Trane part number RLY02529 should be ordered and installed.

Units Affected

All direct drive centrifugal chillers, which incorporate the oil/refrigerant, pump and have the original 1K5 Allen Bradley 1 hp, 120-volt relay.

Parts Information

Order one relay per each unit affected through the PRIDE system, La Crosse Service Parts.

RLY02529, 1K5 oil/refrigerant pump relay

Production Changes

There are no production changes per this service bulletin.

Literature Order Number	CVHE-SVB02A-EN
File Number	SV-RF-CTV-CVHE-SVB02A-EN-0701
Supersedes	New
Stocking Location	Inland

Since The Trane Company has a policy of continuous product and product data improvement, it reserves the right to change design and specifications without notice. Only qualified technicians should perform the installation and servicing of equipment referred to in this publication.

TRANE®

General Service Bulletin

Sticking 1K5 Oil/Refrigerant Pump Motor Relays

CVHE, CVHF, CVHG, CDHF and CDHG

Order No: CVHE-SVB02A-EN July 12, 2001

Introduction

We have had reports of sticking 1K5 oil/refrigerant pump relays on all direct drive centrifugal chillers. Models affected are CVHE, CVHF, CVHG, CDHF and CDHG. This bulletin describes the action to take if a sticking relay is found.

Discussion

The original 1K5 relay for the oil/refrigerant pump motor was an Allen Bradley 1 hp, 120 volt relay, part number 700HHF62A1. This relay has had a history of sticking in the closed position, which causes the oil/refrigerant pump motor to stay energized even when the chiller shuts down. This in turn will cause the chiller to lock out on an MMR diagnostic of "Oil Pressure Sensor Calibration" due to the fact that the oil pump is running when the chiller thinks it is off. Thus, the 3 psid pressure differential between oil supply and oil sump pressures is exceeded after 5 minutes of shutdown and the machine will lock out on the calibration diagnostic.

© 2001 American Standard Inc. All rights reserved.

Corrective Action

To correct the problem of a sticking 1K5 relay, a new Cutler-Hammer 1.5 hp, 120 volt relay, Trane part number RLY02529 should be ordered and installed.

Units Affected

All direct drive centrifugal chillers, which incorporate the oil/refrigerant, pump and have the original 1K5 Allen Bradley 1 hp, 120-volt relay.

Parts Information

Order one relay per each unit affected through the PRIDE system, La Crosse Service Parts.

RLY02529, 1K5 oil/refrigerant pump relay

Production Changes

There are no production changes per this service bulletin.

Literature OrderNumber	CVHE-SVB02A-EN
File Number	SV-RF-CTV-CVHE-SVB02A-EN-0701
Supersedes	New
Stocking Location	Inland

Since The Trane Company has a policy of continuous product and product data improvement, it reserves the right to change design and specifications without notice. Only qualified technicians should perform the installation and servicing of equipment referred to in this publication.

TRANE®

General
Service Bulletin

Intelligent Technology for Solid State Starter

CVHE, CVHF, CVHG, CDHF, CDHG and CVGF

ORDER No.: CVHE-SVB04C-EN DATE: January 2003

Introduction

The purpose of this bulletin is to provide set-up, operation, troubleshooting and replacement information for the "IT" (Intelligent Technology) solid state starter used on CH530 equipped Trane CVHE, CVHF, CVHG, CDHF, CDHG and CVGF units. See Figure 1.

NOTICE: Warnings and Cautions appear at appropriate locations throughout this manual. Read these carefully.

⚠ **WARNING:** Indicates a potentially hazardous situation which, if not avoided, could result in death or serious injury.

⚠ **CAUTION:** Indicates a potentially hazardous situation which, if not avoided, may result in minor or moderate injury.

CAUTION: May also be used to alert reader to a situation that could result in equipment or property only damage.

Figure 1. Unit mounted "IT" solid state starter

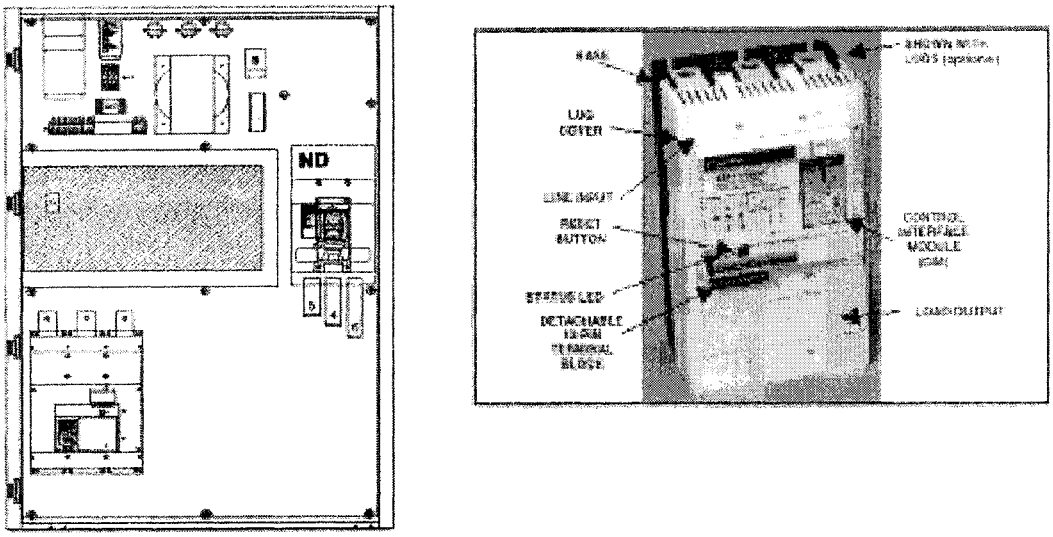

⚠ WARNING

Hazardous Voltage!

Starter and motor components may be energized even if the motor is not running. Disconnect all electric power, including remote disconnects before servicing. Follow proper lockout/tagout procedures to ensure the power cannot be inadvertently energized. Failure to disconnect power before servicing could result in death or serious injury.

CAUTION!

Equipment Damage!

Motor components may be energized even if the motor is not running. Do NOT apply a deep vacuum to the unit if the unit is energized. Disconnect all electric power before evacuating the chiller. Failure to do so may cause damage to the equipment.

Applying a deep vacuum to an IT Solid State Starter equipped unit, while power is applied to the unit, can cause an electrical arc-over inside the motor housing. This can cause motor winding or motor terminal damage or failure.

CAUTION!

Proper phasing of the line power supplied to the IT Solid State Starter is very important. Line power to the IT Starter MUST be phased A-B-C (per the schematic). Use a phase meter to confirm proper phase rotation before the first operation of the chiller. Failure to confirm proper power phasing before unit operation can result in equipment damage.

Note: Chillers with IT Starters that are shipped after November of 2002 will have phase rotation protection built into the IT Starter in order to better prevent equipment damage.

© 2003 American Standard Inc. All rights reserved.

The Intelligent Technology Solid State Starter is applied "inside the delta". As such, motor leads, terminals, and windings are energized continuously whenever the unit disconnect is closed, even if the unit is not running.

The Intelligent Technologies (IT) Inside the Delta Soft Starter is an electronic, self-contained, panel- or enclosure-mounted motor soft-starting device. It is intended to provide 3-phase delta-connected induction motors with a smooth start both mechanically and electrically. The IT line of soft starters utilizes six SCRs in 3 anti-parallel; one pair in series with each phase winding of the Delta-connected motor. Controlling the SCRs' conduction period controls the voltage applied to the motor. This in turn controls the torque developed by the motor. After the motor reaches speed, contacts inside the starter are closed to bypass the SCRs.

The Intelligent Technologies (IT) Soft Starter is designed to fulfill the industrial service requirements for applications such as Chillers and Compressors where Wye-Delta starters are historically applied.

The Intelligent Technologies (IT) Soft Starter meets all relevant specifications set forth by NEMA ICS 1, ICS 2 and ICS 5, UL 508, IEC 60947-4-2, CE, and CSA. This user manual covers useful information that is necessary to know in order to set-up, operate, troubleshoot and maintain the IT Soft Starter.

Environmental Requirements

- Operating ambient temperature range -40°C to 50°C (-40°F to 122°F).
- Storage temperatures range -50°C to 70°C (-58°F to 158°F).
- Elevation up to 2000 meters (6600 feet). Above 2000 meters derate 0.5% per 100 meters (330 feet) up to a maximum of 5000 meters (16000 feet).
- Maximum humidity 95% non-condensing.
- Clean, dry, non-corrosive.

Available Sizes

- 110 mm (110-233 amp)
- 200 mm (234-526 amp)
- 290 mm (527-1472 amp)

Available Voltage Range

- 200-600 Vac 50 and 60 Hertz

Operating Theory

The IT starter uses micro-processor controlled Silicon Controlled Rectifiers (SCRs) to "notch" or temporarily modify the voltage sine wave of each power leg passing through the starter. The larger the "notch" is, the less power and torque will be available to provide work in the motor. During starting process, the notch is large and is progressively reduced in size in order to provide more power and motor torque. The size of the notch can be expressed in the terms of the degrees of the sine wave that it consumes. Refer to Figure 2.

Figure 2. Shows example of size of notch in terms of the degrees of the sine wave that it consumes.

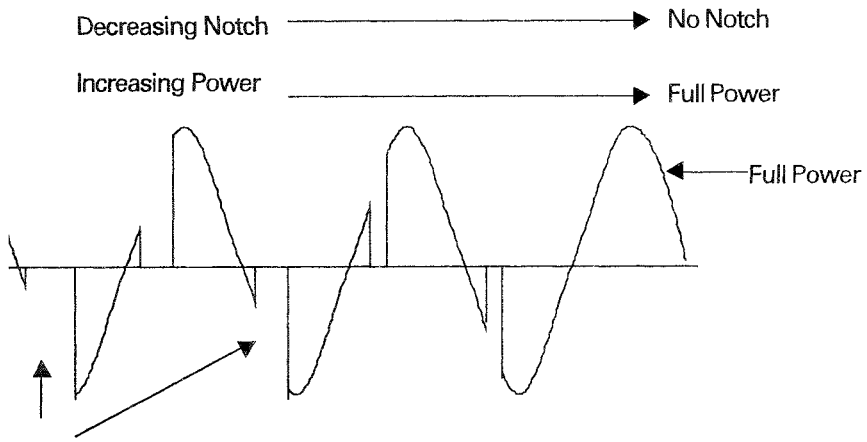

Settings and Interface

To program and operate the IT starter, a "Control Interface Module" (CIM) is used. The CIM is mounted on the front face of the IT starter. The CIM contains the dip switches and rotary controls used to select the settings of the IT starter. Also on the CIM are LEDs that provide status concerning unit operation and faults.

Note that any change to a dip switch will cause all LEDs to flash momentarily. Any adjustment to a rotary control will cause the LEDs to light, and they will stay lit until the adjustment has been completed.

The IT starter does not have to be powered in order to make adjustments on the CIM. Once the unit is energized, the CIM will load its parameters into the IT starter. To verify the CIM is operational press the "fault reset" button that is just below the CIM. All LEDs will momentarily flash if the CIM is powered and communicating.

Dip and Rotary Switch Settings

Refer to the following table for the recommended settings on the CIM. If a switch is labeled "non-settable", this means that the feature is internally set at a fixed value for the Trane application, and it cannot be changed using the switches. Moving the switch will have no effect.

CIM Dip or Rotary Switch	Settable/ Non-Settable	Default/Masked Setting
Overload	Non-settable	On
Jam	Non-settable	Disable
Stall	Non-settable	Disable
Phase loss	Non-settable	Disable
Phase reversal	Non-settable	Disable
Manual reset	Non-settable	Automatic reset
S.F. (special function)	Non-settable	Disable
Ramp start and Current limit	Settable	Ramp
T_1 (kick start)	Non-settable	0% torque
t_k (kick start time)	Non-settable	0 seconds
T_2 (advance or limit)	Settable	25%
t_s (soft-stop time)	Non-settable	0 seconds
t_r (ramp)	Settable	25 seconds
FLA	Non-settable	"D"
Overload Trip Class	Non-settable	Class 30

Figure 3. Control interface module (CIM)

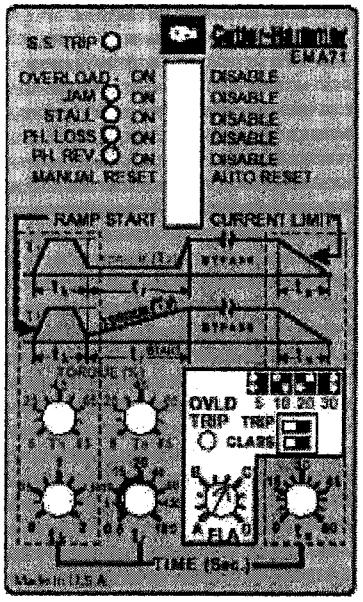

The LEDs that are present next to the dip switches are not used to show the status of the dip switches because the features represented are not used in the Trane application. However, the LEDs are used when reading fault codes that may be present in the starter. Refer to the troubleshooting section of this Bulletin.

Rotary Switch Settings

The lower portion of the CIM module contains several rotary switches that must be set to provide proper operation of the IT starter.

The **"T_1"** rotary switch is the kick start torque setting. Because kick start is not used in the Trane application it can remain set to 0% torque. Non-settable.

The "t_k" rotary switch is the kick start time setting. Because kick start is not used in the Trane application it can remain set to 0 seconds. Non-settable.

The "T_2" rotary switch is the initial torque setting for ramp starting, or it is the torque and current limit setting if the Current Limit method of starting is selected. Refer to the "Starting Options" section of this bulletin for the recommended settings. (Default is 25%.)

The "t_r" rotary switch is the time setting for the ramp and current limit starting methods. Refer to the "Starting Options" section of this bulletin for the recommended settings. (Default is 25 seconds.)

The "t_s" rotary switch is the time setting for the "soft-stop" feature of the IT starter. Because soft stop is not used in the Trane application it can remain set at 0 seconds. Non-settable.

Overload Trip Settings

Overload protection for the Trane chiller motor is provided by the Trane unit control system. Because overload protection is not required from the IT starter, the overload trip settings are internally set to the highest settings of "D" and trip class 30. The overload trip settings on the CIM will have no effect, but can be set to "D" and trip class 30 in order to prevent confusion. Non-settable.

Solid State LED

An LED on the upper left corner of the CIM will be lit when the IT starter has tripped on a starter fault. Refer to the troubleshooting section of this bulletin.

Status LED

An LED labeled "Status" is provided on the front face of the IT starter. This LED will be green when power is on or during normal operation and will be red or off when a problem is present. Refer to the troubleshooting section of this bulletin.

Starter Fault Relay

The IT solid state starter normally open control contacts found between terminals 95 and 98 are connected to a Trane CH530 dual low voltage binary input board (PN X13650728 J2-1, 2). The contact logic is:

No fault detected by starter = closed
Fault detected by starter = open
Power off to starter = open

If there is a fault condition a Trane CH530 diagnostic "Solid State Starter Relay Open" will occur. The CH530 "Solid State Starter Relay Open" diagnostic is an MMR diagnostic and must be reset manually in the CH530.

The fault signal in the IT starter itself will be automatically cleared by the IT starter when a fault no longer exists.

Service Test: Dry run is not possible with IT Starter because starter must be powered to be functional and provide no fault signal.

Starting Options

The Trane applied IT starter does not use Cutler-Hammer's Kick Start feature. Of the two types of starting that are available, the most commonly used (and Trane's default method) is the "Ramp" start. The Ramp starting method is selected using the Ramp Start or Current Limit dipswitch on the CIM. In the Ramp starting sequence, the motor is first energized at the largest possible notch size (125°) and then is ramped very quickly to a slightly smaller notch size that provides an initial torque value. The initial torque value can be set using the rotary switch labeled "T_2" on the CIM; the Trane recommended setting for T_2 is 25%. After reaching the initial torque setting, the notch size is then decreased (and the torque is increased) over the range of the acceleration ramp start time. The acceleration ramp start time can be set using the rotary switch labeled "t_r" on the CIM; the Trane recommended setting for t_r is 25 seconds. This will result in a smooth increase in the power that is applied to the motor. When the starter microprocessor controls sense the motor is up to speed, the starter will quickly ramp to full power (no notch) within 2 seconds and the starter's internal bypass contacts will then close. Refer to Figure 4.

Figure 4. Ramp start

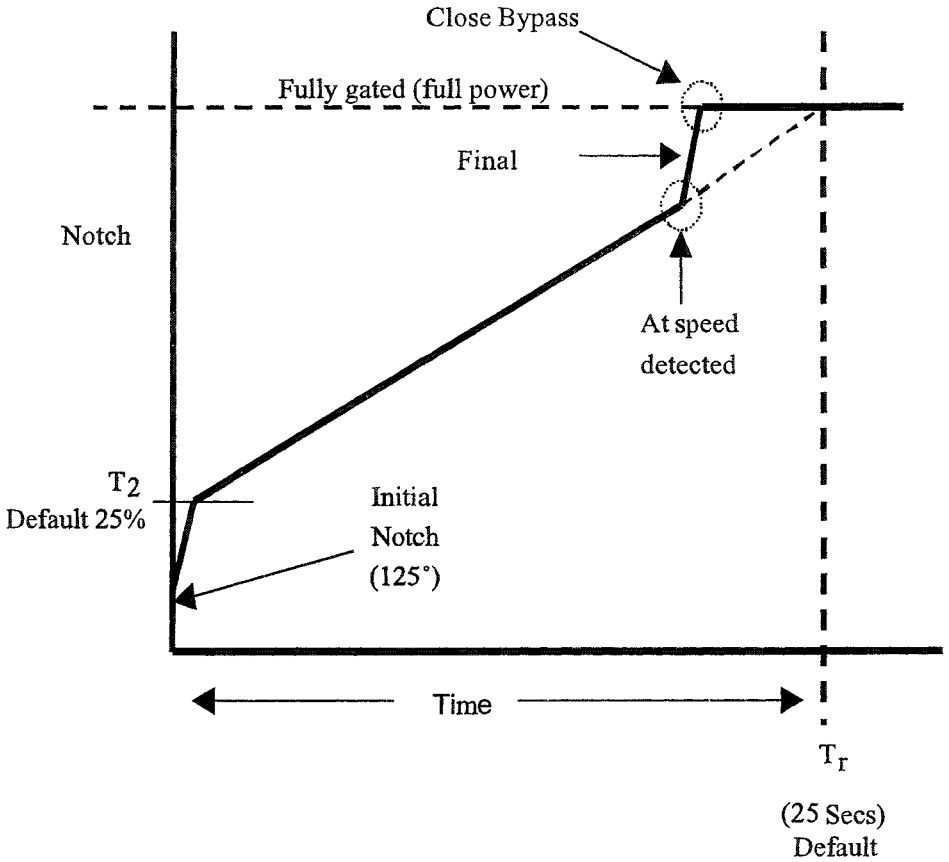

A second method of starting using Current Limit is available for use when it is desired to limit the maximum amount of current drawn during the chiller starting. The Current Limit starting method may be selected using the Ramp Start and Current Limit dipswitch on the CIM. In the Current Limit starting method the power is smoothly ramped from the initial notch up to the 2 setting, which is typically 15 to 50% of torque (40 to 70% of LRAD). The current limit torque value can be set using the rotary switch labeled "T_2" on the CIM; the Trane recommended setting for T_2 is 25%. After reaching the current limit torque value, the notch size and power is then held at that value while the motor accelerates. How quickly the starter ramps up towards the T_2 setting is determined by the setting of t_r. The t_r is set using its rotary switch on the CIM; it is typically set at 9 seconds for this type of starting. Refer to Figure 5.

Figure 5. Current limit start

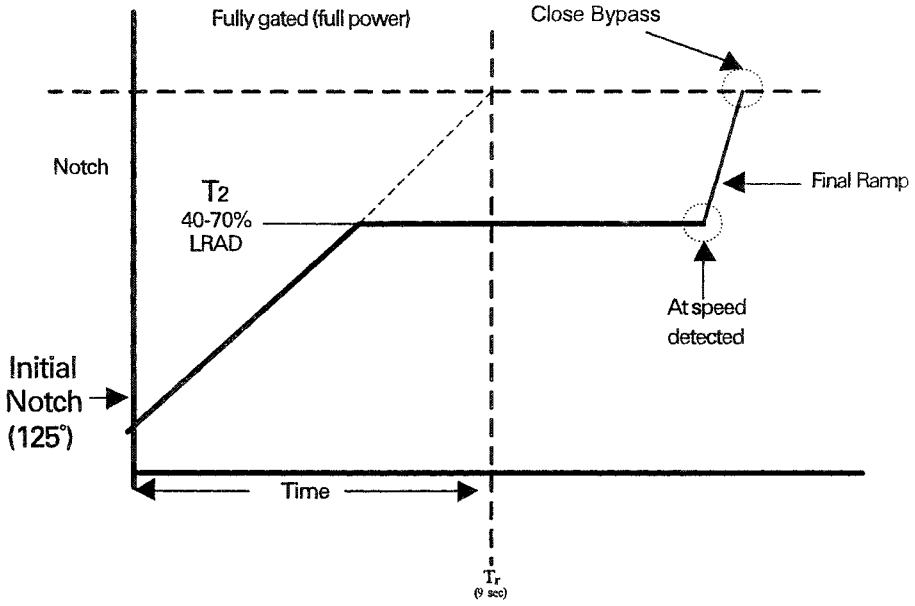

The Trane recommended setting for T_2 when using current limit starting is 25%, which will limit current to approximately 50% of LRAD. If job site conditions require other torque or current values, the table below can be used as a guideline for setting T_2. T_2 must always be set large enough to ensure that the motor will successfully start and accelerate under all conditions.

Torque Setting (T_2)	Approximate % of Locked Rotor (LRAD)
56%	75%
45%	67%
36%	60%
27%	52%
19%	44%
14%	37%
9%	30%

Sequences

Starting – The CH530 chiller control will issue a start command from terminal J8-1 on the starter module to the start and permissive terminals on the IT starter. Holding relay 2K11 will also be energized and will hold it in to make the temporary start signal into a continuous run signal.

When the start and run signal is received on the start and permissive terminals of the IT, the IT will immediately begin to fire the SCRs at the widest possible notch (125°). The rate at which the notch is then reduced and the power to the motor increased, is then determined by the method of starting that is selected (I.E., Ramp or Current Limit).

Motor Acceleration - Regardless of the starting method used the Trane chiller unit controls will allow a maximum of 27 seconds from commanding a start signal and applying power to the solid state starter, to receiving the up-to-speed signal. If the motor acceleration is not confirmed within 27 seconds the unit controls will issue a stop command to the starter and a diagnostic will occur. The failure to accelerate diagnostic requires a manual reset of the unit controls. (The bypass cannot be forced to close at the expiration of this timer.)

Bypass – A bypass contactor exists inside the IT starter, in parallel with the SCRs. The contactor will carry 100% of chiller RLA . It will not, under normal starting or running circumstances, make or break current that is greater than the frame amps of the starter. The bypass contactor is energized when the motor is "at speed" and the SCRs are fully phased on (zero notches). During stopping the bypass contactor will be de-energized only after the SCRs are fully phased on. The bypass contactor will not break full load current during a loss of voltage; the SCRs will be gated on to take the load.

Stopping Profile – When the chiller controls remove the 24-vdc signal from the start and permissive terminals and asks the IT starter to stop, the SCRs will be fully phased on. The bypass contactor will be de-energized, and the SCRs will then be turned off at the earliest available zero current cross (when the current sine wave passes through zero). The stopping profile time from removal of the 24-vdc signal shall be less than 50ms. The SCRs will not, under normal circumstances, make or break current greater than the chiller's RLA. Trane does not use the soft stopping profile.

Power Wiring

Line power provided to the IT starter must be phased A-B-C. Failure to properly phase the incoming line power for IT equipped chillers shipped previous to November of 2002 may result in incorrect firing of the SCRs and possible tripping of the unit circuit breaker and/or equipment damage. IT equipped CVHE/F/G and CVGF chilllers built after November 2002 have additional phase reversal protection added to the IT starter. Failure to connect with a proper phasing of A-B-C will result in a starter fault and the chiller will not start. A flash code will be provided on the IT that indicates a "Phase Connection Sequence Fault."

Starter Device Input and Output

A 12-pin detachable terminal block is provided on the front of the IT starter to connect the starter to the control circuit of the chiller.
The terminals are labeled:

"-" = 24-vdc common.

"+" = 24-vdc supply.

"P" = Permissive input. If power is not present on this terminal the unit will not start or run. For Trane applications this terminal should be connected with a jumper to terminal 1.

"1" = Start input. This terminal receives the start/run signal from the chiller control system.

"2" = Jog forward input. This terminal is not used on the Trane application.

"3" = Overload disable input. This terminal is not used on the Trane application.

"4" = Fault reset input. This terminal is not used on the Trane application. The fault flash codes will appear if 24-vdc is applied continuously to this terminal.

"13" and "14" = Terminals 13 and 14 provide a "up–to-speed" signal back to the chiller control system. It is a normally open relay that closes its contacts when the IT starter determines the motor has successfully accelerated.

"95" = Common for the starter fault relay of the IT starter.

"96" = Normally closed contact for the starter fault relay of the IT starter. This contact provides a fault signal to the chiller control system.
OK = closed
Fault = open
No Power = open

"98" = Normally open contact for the starter fault relay of the IT

Each connection in the terminal block is capable of holding one or two 0.33-2.5mm^2 (#22 - #14 AWG) wires, or one 4mm^2 (#12 AWG) wire. Each terminal should be tightened to 0.4 N-m (3.5 In-Lb.).

⚠ Caution	⚠ Attention
Only apply 24V DC to the control terminal block unless specified otherwise in this manual. All control wiring is #22 - #12 AWG. Failure to follow this caution could result in severe damage to the controller.	Appliquer seulement une tension de 24 V c.c. aux bornier sauf avis contraire dans ce manuel. Toute la filerie de commande est de calibre 22 à 12 AWG. L'inobservation de cette mesure pourrait causer des dommages importants au contrôleur.

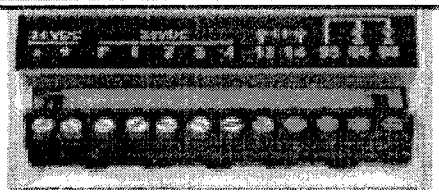

Accessories

MOVs – Most utility power systems experience periodic transient voltages. Line or power factor correction capacitor switching, nearby lightening strikes, utility supply faults, or a user starting or shutting down a large load such as a motor can cause these voltages. The IT starter has been designed to handle transient voltages of up to 4kV lasting up to 20 seconds. If transient voltages of greater magnitude or of a longer duration than the standard withstands rating capability are expected, then a protective module must be installed. The protective module contains Metal Oxide Varistors (MOVs). MOVs are devices that remain in a passive state until a transient voltage occurs. Under the transient condition the MOV turns on and holds the peak line voltage down to a level that is less than the IT transient voltage rating. When the transient clears, the MOV returns to a passive state. MOVs are factory installed on a new starter, or they may be purchased for installation in the field. Contact Trane AfterMarket for information concerning the purchase and installation of MOVs.

PFCCs – If Power Factor Correction Capacitors (PFCCs) are installed on the system they must NOT be connected to the load side of the IT starter. Do NOT connect PFCCs between the IT starter and the motor. PFCCs must be installed on the line side of the IT starter. A separate isolation contactor is required to energize the capacitors. The capacitors are only energized after the motor is up to speed.

Troubleshooting

The following section presents information useful for diagnosing a problem with the Trane applied IT starter. While many potential situations are outlined, it is possible you may run into a problem that is not covered here. If you have worked through the following troubleshooting procedure and find that you require further assistance, please contact the appropriate business unit technical service group. Please always have the following information ready when you call or use web resources:

Trane Sales Order Number	
Trane Unit Serial Number	
Unit Design RLA	
Starter Catalog Number	
Style Number	
Starter Serial Number	
CIM Dip Switch Settings	
CIM Rotary Switch Settings	

Before You begin To Troubleshoot:

⚠ WARNING

Hazardous Voltage!

Use extreme caution when service related work, adjustments, measurements or other service work is performed with power on.

If troubleshooting procedure requires equipment to be energized, all work must be performed by properly qualified personnel, following appropriate safety practices and precautionary measures.

Failure to do so could cause death or serious injury.

We highly recommend you read this entire section of the manual before troubleshooting the IT starter.

You may want to obtain the following equipment to aid you in troubleshooting:

Multimeter
Clamp-on ammeter

Define the Problem

The IT starter fails to start. No power is applied to the motor.	Use Flowchart #1
The IT starter trips during startup, or fails to reach rated speed before going into bypass.	Use Flowchart #1
The IT starter trips or stops running during normal conditions.	Use Flowchart #1
None of the above descriptions match the problem.	Use Flowchart #2

Flow Chart 1

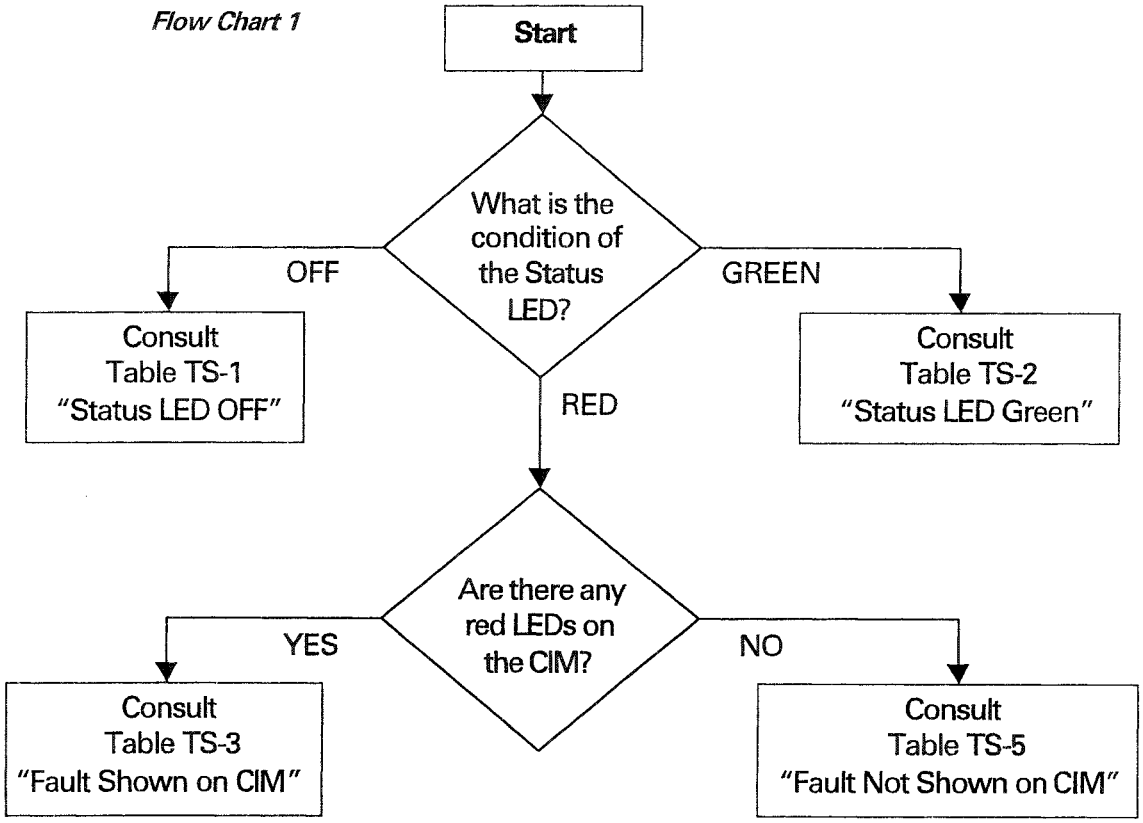

Flow Chart 2

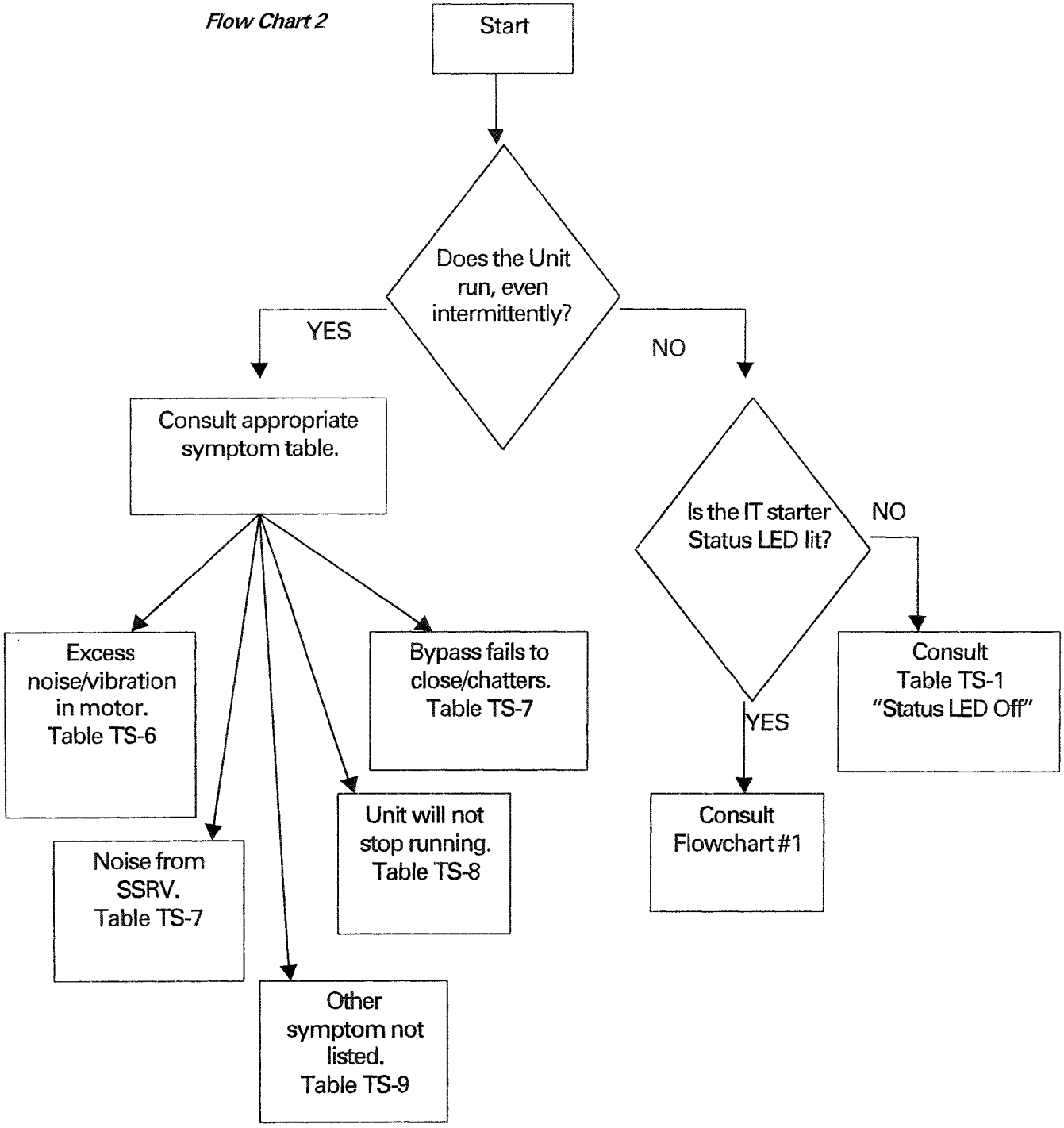
Start
Does the Unit run, even intermittently?
YES
NO
Consult appropriate symptom table.
Excess noise/vibration in motor. Table TS-6
Noise from SSRV. Table TS-7
Other symptom not listed. Table TS-9
Unit will not stop running. Table TS-8
Bypass fails to close/chatters. Table TS-7
Is the IT starter Status LED lit?
NO
YES
Consult Table TS-1 "Status LED Off"
Consult Flowchart #1

Table TS-1. Status LED off

Symptom and Indication	Possible Problem	Possible Solution
No indication on the unit or on the CIM.	Loss of 24-vdc control power	Check control wiring
		Verify 24-vdc power from power supply
		Check power supply fuse/breaker
	Failed CIM	Disconnect the CIM. If the Status LED lights, replace the CIM. If not, the control board may be defective.
	Failed control board	Contact service or parts
No status light, but CIM is powered.	Failed LED indication	Reset the unit, verify operation
		Cycle the 24-vdc power to the unit.

Table TS-2. Status LED green

Symptom and Indication	Possible Problem	Possible Solution
Status LED is green, but no indication on the CIM.	Line power fault	Check wiring connection on load and line side.
		Check line power breakers/fuses
		Verify 24-vdc power is available for terminals P and 1 on the starter.

Table TS-3. Fault shown on CIM

Symptom and Indication	Possible Problem	Possible Solution
SS or over temp LED is lit on CIM.	High temperature – see flash codes	Allow unit to cool down with 24-vdc applied to + and -.
		Verify operation of unit cooling fans.
		Clear any restrictions to airflow.
	Possible hardware failure – see flash codes	If code 32 is indicated, check actual motor start time vs. the "Tr" setting. Tr should not be set more than 2 or 3 seconds longer than the actual motor start time.
		Contact technical assistance
PH LOSS LED is lit on the CIM.	One or more line voltages missing or is low.	Verify that proper line voltage is present and that no other equipment was affected.
		Confirm the line power connections are correct and tight.
		Check line power fuses, circuit breakers, and disconnects.
		Press the reset button below the CIM to clear the fault.
	Phase voltages or currents unbalanced	Check same solutions for phase loss.
		Confirm the motor current is acceptably balanced when the line voltage is balanced. If not, investigate system/motor.
		If line voltage is balanced but load voltage is not, check bypass. Contact technical assistance.
		Check load connections at starter and at motor terminal box.
OVLD TRIP LED is lit on the CIM. (Thermal overload trip, the Trane unit controls should trigger before the IT starter).	Motor is overloaded.	Check motor for load problems.
	FLA not set to motor ratings.	The IT starter uses the highest RLA value of "D" for Trane applications.
	Trip class not set properly.	The IT starter uses the highest trip class of "30" for Trane applications.
	Fault exists in memory.	Press the reset button below the CIM to clear the fault. If the fault remains, allow the system to cool and try again.
	Failed current sensor	Contact technical assistance.

Starter Fault Flash Codes sent to the CIM

To obtain the fault flash codes from the CIM, press and hold the reset button (located below the CIM) down or apply 24-vdc to terminal 4. All LEDs on the CIM will flash in a sequence that will define the faults that are present. Count the number of times all the LEDs on the CIM flash.

For example, if you see three flashes, and then two more flashes after a short pause, the flash code is 32.

The CIM can provide multiple flash codes if more than one error condition has caused a stop. Once you see the same flash codes repeated you will have seen all of the flash codes for the error conditions that caused the stop.

For example, if you see three flashes, a pause, then two flashes, a pause, then four flashes, a pause, then one flash, the flash codes are 32 and 41. If you then see three flashes, a pause, then two flashes, you are seeing the first code again. This means you have seen all of the flash codes for this stop. You may release the reset button or remove the 24-vdc from terminal 4.

TableTS-4. Flash codes

Code	Fault	Possible Cause
11	Thermal Overload	See Table TS-3
12	Motor Stall	NA (not used by Trane)
13	Motor Jam	NA (not used by Trane)
14	Phase Sequence ACB	NA (not used by Trane)
15	Pole Over-temperature	See Table TS-3
16	SCR Failed to Fire	Loose connection or defective unit
21	115v Power Supply Low	Weak control power or defective unit
22	Phase Loss	See Table TS-3
23	By-pass Dropout	Weak control power or defective unit
24	SCR Contactor Overcurrent	Load amps excessive
25	Phase Imbalance	See Table TS-3
26	Non-volatile Memory Error	Internal control board fault
31	Zero Voltage Cross Failure	Control power applied out of sequence or PFCCs on motor
32	Shorted SCR, Phase Loss, Load Disconnect	See Table TS-3
33	Serial Communications Lost	Internal control board fault
34	SCR Instantaneous Over-current	Current exceeded start ratings during the starting or stopping mode
41	24-vdc Power Supply Low	Improper 24-vdc supply or weak control power
42	Timer System Fault	Internal control board fault
43	Watchdog Reset Occurred	External electrical noise or internal control board fault
44	PLL (DSP)	Internal control board fault
45	Illegal Address	Internal control board fault
46	Phase Connection Sequence Fault	Line power not phased ABC

Table TS-5. Fault not shown on CIM

Symptom Indication	Possible Problem	Possible Solution
Status LED is lit, but no indication on the CIM.	No communication with the CIM. on the CIM should light.	Verify connection between starter and CIM. Press the reset button on the starter, all LEDs
	Sensor Failure.	Cycle the 24-vdc power to the unit. Allow unit to reset.
	Bypass opened during run.	Press the reset button to reset the fault.
		Weak 24-vdc power supply. Verify that the 24-vdc power supply output rating is large enough to close the bypass contacts with a minimum output rating of 250 watts for 0.15 seconds.

Table TS-6. Excessive noise and vibration in motor

Symptom Indication	Possible Problem	Possible Solution
Motor vibration during start-up.	Load fluctuations.	Check load conditions.
	Misapplication.	Ramp time set too low for application.
		Torque set too low for application.
	Load voltage or current is unbalanced, but line voltage is balanced.	Check line and load connections at the starter, and at the motor terminal box.
	Hardware failure.	Contact technical assistance.
Motor vibration during normal run.	Load fluctuations.	Check load conditions.
		Check motor connections.

Table TS-7. Noise from starter - bypass fails to close/chatters

Symptom Indication	Possible Problem	Possible Solution
Audible noise from IT starter.	Bypass contact chatter.	Check 24-vdc control power to IT starter.
		Verify 24-vdc power supply meets power inrush requirements of 250 watts for 0.15 seconds.
	Loose connections.	Remove power from unit, check all connections.
	Loose mountings.	Remove power from unit, check all mounting hardware.

Table TS-8. Unit will not stop

Symptom Indication	Possible Problem	Possible Solution
Motor will not shut off.	Control wiring is incorrect.	Verify 24-vdc is removed from the P terminal when stop is desired.
		Verify no stray strands of 24-vdc power are connected to the P terminal.
	Bypass fails to open.	Open disconnect. Remove all power from unit and check continuity of poles.
	Shorted SCR.	Open disconnect. Remove all power from unit and check continuity of poles.

Table TS-9. Other symptoms

Symptom Indication	Possible Problem	Possible Solution
Motor short circuited.	Winding fault.	Identify and correct motor fault.
		Verify all power connections are secure.
		Verify no shorts exist in cabling or motor terminal box.
Motor starts too slowly.	Incorrect setting.	Increase torque or current limit setting.
		Decrease ramp time.
Motor starts too quickly.	Incorrect setting.	Increase ramp time.
		Decrease torque or current limit setting.
Unit CH530 controls provide a phase reversal or mpl diagnostic during starting attempt.	Incorrect phasing of power.	Correct the line phasing.
	IT starter response.	Increase aggressiveness of IT settings.
		Increase the phase reversal grace period setting in CH530
	Poor incoming power quality.	Correct power quality.
Starter circuit breaker Trips.	Incorrect phasing of power.	Correct the line phasing.
	Motor short circuited.	See this table.
	Motor starts too quickly.	See this table.
	Incorrectly set or faulty breaker	Check breaker.

Removing the Controller Interface Module (CIM):

Note that the IT starter, with the CIM attached, is installed up side down in the Trane starter panel.

1. To remove the CIM, release the catch lever located in the cover just below the center of the CIM. Move the latch away from the CIM.
2. Disconnect the communication cable from the bottom of the CIM assembly by pressing the lever to unlatch the communication plug.
3. Re-install the CIM in the reverse sequence.
   Note: The edge of the CIM opposite of the latch must be inserted into the cover first, prior to snapping the CIM into the latch.



TRANE®

Literature Order Number	CVHE-SVB04C-EN
File Number	SL-RF-CVHE-CTV-SVB04C-EN-103
Supersedes	CVHE-SVB04B-EN-1002
Stocking Location	Electronic Only

Trane
A business of American Standard Companies
www.trane.com

For more information contact your local district office or e-mail us at comfort@trane.com

Trane has a policy of continuous product and product data improvement and reserves the right to change design and specifications without notice. Only qualified technicians should perform the installation and servicing of equipment referred to in this publication.

TRANE

General Service Bulletin

UnitMount™

Medium Voltage Starters on Trane CenTraVac Chillers

ORDER No.: CVHE-SVB06A-EN DATE: April 2002

Introduction

This bulletin discusses the set-up, inspection, operation, and maintenance of the Trane supplied UnitMount™ medium voltage starter, used on Trane CVHE, CVHF, CVHG, CDHF, and CDHG chillers.

General Information

UnitMount™ medium voltage starters consist of an isolation switch, current-limiting power fuses, vacuum contactor, and associated components for the control and protection of the medium voltage motor on a Trane CenTraVac™ Chiller. (See Figure 2.)

The isolation switch has a limited make and break rating, suitable only for the closing and opening the load of the 4kva control power transformer supplied inside the starter. The switch is mechanically interlocked with the main vacuum contactor to insure that the motor is disconnected from the line before the switch can be operated.

The vacuum contactor is either a 200 amp or 400 amp design, dependant on the actual motor load. Refer to Cutler-Hammer Instruction Book IB-48018N for more specific instructions on the contactor.

Line voltage from a medium voltage source enters the cabinet from cables located through the lead-plate in the roof of the enclosure. The line voltage is isolated in the upper portion of the starter enclosure by the isolation switch, when the switch is in the open position. A horizontal barrier is located at the bottom of the switch compartment to prevent accidental contact with the incoming power circuit while preventing inadvertent contact with the incoming power while servicing the starter. The barrier and all bolted covers must remain in place as long as the incoming cables are energized.

A viewing window is located in the bolt-on cover in front of the isolation switch to allow visual confirmation of the switch blade position. (See Figure 1.)

The starter control components are located in the low voltage control compartment that is accessible behind the low voltage door located on the lower right front of the starter. The low voltage door may be opened with the starter isolation switch in the closed position. Care should be taken if the low voltage door is opened with the isolation switch closed since there will be control voltage (120 vac) present in the control compartment.

Located inside the low voltage control compartment are the components that interface the starter with the Trane CH530 unit control. The CH530 Starter module controls the contactor sequence during motor starting.

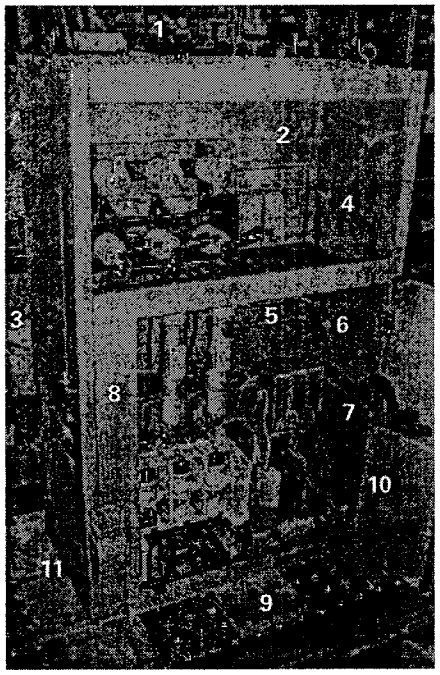

Component List

1. Line Cable Lead Plate
2. Isolation Switch
3. Side Access Panel
4. Horizontal Safety Barrier
5. Bolted Main Fuses
6. Control Power Primary Fuses
7. 4 kVA Control Power Transformer
8. Potential Transformers
9. Vacuum Contactor
10. Starter Control Compartment (Rear View)
11. Isolation Switch Operating Handle

Starter Identification

A rating nameplate is located on the lower left corner of the medium voltage door. The nameplate includes the following information:

- Line voltage, frequency, phase
- Load current range
- Cutler-Hammer General Order Number
- Trane Service Model Number
- Short Circuit Rating

© 2002 American Standard Inc. All rights reserved.

Trane Service Model # breakdown

An example of a typical Trane chiller UnitMount™ starter service model number is:

CVSM0035PAH603BEA0C100

CVS	1st, 2nd, 3rd digit CenTraVac Starter	
M	4th digit Development Sequence	
0035	5th, 6th, 7th, 8th digit Starter Size (RLA)	
P	9th digit Unit Voltage	K = 2300V –60Hz L = 2400V - 60Hz M = 4000V – 60Hz N = 4160V – 60Hz P = 3300V – 60Hz X = 6600V – 60Hz V = 3300V – 50Hz W = 6000V – 50Hz Z = 6600V – 50Hz S = Special
A	10th digit Design Sequence	
H	11th digit Starter Type	H = UnitMount X-line J = UnitMount Auto Trans K = UnitMount Pri Reactor
6	12th digit Connection Type	6 = Isolation Switch S = Special
0	13th digit Agency Listing	0 = UL/CUL and Calif Code
3	14th digit Control meters	0 = None 3 = Volt and Amp meters
B	15th digit Digital Meter and protection package	0 = None B = I.Q. Data C = I.Q. DP4130 S = Special
E	16th digit Power Factor Correction Capacitors (PFCCs)	0 = None A = 10 kvar B = 15 kvar C = 20 kvar D = 25 kvar E = 30 kvar F = 35 kvar G = 40 kvar H = 45 kvar J = 50 kvar K = 60 kvar L = 70 kvar M = 75 kvar N = 80 kvar P = 90 kvar R = 100 kvar T = 120 kvar U = 125 kvar V = 150 kvar S = Special
A	17th digit Ground Fault Protect	0 = None A = Ground Fault Protection S = Special
0	18th digit Surge protect Lightning arrest	0 = None A = Surge/Lightning S = Special
C	19th digit Control Power Opt.	B = Terminals Strip C = 4KVA Control Power Trans
1	20th digit Potential Transformers	0 = None 1 = Transformers S = Special

Contactor Information

Table 1

	Type SL-200	Type SL-400
Maximum Interrupting Current (3 operations)	4500 amps	8500 amps
Rated Current (continuous)	200 amps	400 amps
IEC Make-Break Capability – AC4	Make 4000 A Break 3200 A	
Short Time Current	30 sec - 2400 A 1 sec - 6000 A 8.7 MS (0.5 cycle) - 63kA peak	
Standard Service Altitude	-1000 to +2000 meters	
Optional Service Altitudes	-3500 to –1001 meters +2001 to +5000 meters	
Mechanical Life	2.5 million operations	
Electrical Life	300,000 operations	
BIL	60kV (1.2 x 50 microseconds)	
Dielectric Strength (60Hz)	20kV (1 minute)	
Closing Time	80 milliseconds	
Opening Time	30 to 250 milliseconds (selectable) Trane UnitMount setting is 50 milliseconds	
Arcing Time	12 milliseconds (3/4 cycle) or less	
Pick-up Voltage	80% rated coil voltage	
Drop-out Voltage	60% rated coil voltage	
Control Voltage (Trane UnitMount)	110/120 volts AC, 50/60Hz	
Control Circuit Burden	Closing 600 VA Holding 30 VA	
Auxilliary Contact Rating	Voltage (max) 600V Continuous Current 10 A	
Maximum Insulation Voltage	7200V	
Weight	47 lbs (21.3 kg)	49 lbs (22.2 kg)
For further contactor information refer to the appropriate Cutler-Hammer literature		

Fuse Information

The control power transformer fuses (2F1, 2F2, 2F3) are rated at 5 amps. For voltages less than 5000 volts 5kV fuses are used. For voltages above 5000 volts 8.3kV fuses are applied.

The standard main line fuses used in the Trane UnitMount™ application are:

Table 2

Voltage	Running Amps	Fuse Rating	C-H Part Number
5 kV	8 to 75	6R	5982C31G06
	76 to 150	12R	5982C31G08
	151 to 288	24R	5982C32G02
7.2 kV	8 to 75	6R	5982C36G05
	75 to 150	12R	5982C36G07
	151 to 288	24R	5982C36G09

Operation

Mechanical Interlocks - Door, Switch, Contactor Interlock

This mechanical interlock prevents inadvertent closure of the isolation switch if the enclosure door is open. When the door is closed, a bracket fastened to the inside of the enclosure door causes the interlock to move out of the blocking position.

The medium voltage door must be closed with the door latches fully tightened to insure that the interlock is properly engaged. Failure to fully tighten the latches will block the movement of the isolation switch handle and also prevent the main contactor from closing when a start signal is received from the chiller control panel.

The same interlock assembly prevents the isolation switch from being operated if the main contactor is energized. The interlock also prevents the contactor from being closed if the isolation switch handle is in an intermediate position.

Mechanical Interlocks - Door and Switch Shaft Interlock

When the isolation switch is closed, an interlock piece welded to the operating handle of the switch captures a door mounted bracket, preventing the door from being opened. When the switch is opened, the handle is rotated down to release the door-mounted bracket. The door is then free and may be opened.

Isolation Switch Operation

The opening and closing of the isolation switch is through an off-center stored energy mechanism that provides for quick-make and quick-break. The switch main shaft is driven by a chain and sprocket from the front operating handle. As the handle is rotated, it is chain connected to a sprocket which in turn drives the operating spring to a charged position. As the operator continues to rotate the handle, the charged operating spring is driven off-center by the chain and releases its energy into rotating the operating shaft. The switch blades will not move in either a closing or opening direction until the operating spring causes rotation in the main shaft. It should be noted that once the springs are moved off-center, the operator has no further control of the opening or closing operation. Therefore, the switch has CPT load make and break ratings independent of operating personnel performance.

To operate the chiller, the starter isolation switch must be in the closed position. In the closed position, the primary of the 4kva control power transformer (CPT) is energized to provide voltage to the starter and chiller control circuits. Power is also then available to the line side of the main contactor, allowing the motor to be energized when the contactor receives a start command from the chiller control panel.

The isolation switch is closed by pulling out on the handle latch button and rotating the handle upward. The isolation switch is opened by pulling out on the interlock button on the handle housing and then rotating the handle downward.

A clear viewing window is located in the bolt-on cover in front of the isolation switch. The window allows visual confirmation of the isolation switch blade position.

⚠ CAUTION

Failure to clear the latch button lever from the housing mechanism can cause extreme damage and jam the operating handle.

To service the chiller or starter, the starter isolation switch must be in the open position. The isolation switch is opened by pulling out on the interlock button on the handle housing and then rotating the handle downwards.

Always follow all local procedures related to lock-out and tag-out when servicing the chiller or starter.The isolation switch handle will accept a padlocking mechanism to insure that the isolation switch cannot be closed with the padlocking mechanism attached.

⚠ WARNING

Forcing handle operation against safety interlocks may result in property damage, bodily injury or death.

Do not force the isolation switch handle. If the handle cannot be easily operated, make sure that the main contactor is open. The handle and switch are interlocked with the contactor and cannot be operated with the contactor closed.

Contactor Operation

When motor starting is called for by the unit controls, the 2K1 contactor is closed by energizing the contactor control board terminals 1 and 2 with a 115v signal from the CH530 starter module. The contactor control board then rectifies the input voltage and applies a pulse width modulated DC output voltage to the contactor coils. The output voltage is approximately full voltage for the first 200 milliseconds after energization, during which time the contactor closes and seals. The output voltage is then automatically reduced by the contactor control board to approximately 15 VDC to maintain the contactor in the closed position.

When the unit controls decide to open the contactor, the CH530 starter module will open it's contact and interrupt the 115v control signal. When the signal is removed from the control board the contactor is held closed for a pre-set time and then is allowed to open. The range of time between the removal of the control power signal and the contact opening is adjustable from 30 to 250 milliseconds, and forTrane chiller applications it is normally set to the default setting of 50 milliseconds.

For more detailed information on the contactor's construction, operation, and maintenance refer to Cutler-Hammer instruction booklet IB-48018N.

Installation of UnitMount™ Starters

The UnitMount starter, whether actually on or off of a chiller, must be kept in a clean and dry location with ample air circulation and heat to prevent condensation. Like all electrical apparatus, the UnitMount starter contains insulation that must be protected against dirt and moisture.

For most applications the UnitMount starter will remain mounted on the chiller and only basic electrical connections will need to be made in order to place it into service.

For limited access applications which require the UnitMount starter to be removed and then re-installed after the chiller is in place, refer to the appropriate section of this manual.

Installation

UnitMount starters are designed to be installed, operated, and maintained by adequately trained and qualified workmen. These instructions do not cover all details, variations, or combinations of the equipment, its storage, delivery, installation, check-out, safe operation, or maintenance. Always comply with local, state, and national regulations, as well as safety practices, for this class of equipment.

Before making any connections, make sure all leads to be handled are dead.

⚠ WARNING

Hazardous Voltage!

There is a hazard of electric shock whenever working on or near electrical equipment. Electric shock may cause injury or death. Turn off all power supplying the equipment before starting the work. Lock-out the disconnecting means using a proper "lock-out or tag-out" system.

When it is not feasible to de-energize the system, then precautions must be taken.

- **Require persons working on exposed parts that are or may be energized to be qualified persons who have been trained to work on energized circuits. A qualified person is one who is familiar with the construction and operation of the equipment and the hazards involved. In addition, this person should have the following qualifications:**
- Be trained and authorized to energize, de-energize, clear, ground, lock-out, and tag circuits and equipment in accordance with established safety practices.
- Be trained in the proper care and use of protective equipment such as rubber gloves, hard hat, safety glasses or face shields, flash clothing, etc. in accordance with established practices.
- Be trained in rendering first aid.
- Be knowledgeable with respect to electrical installation codes and standards, for example, the National Electric Code (NEC).

Make connections in accordance with the submittal drawings furnished with the order. Select 75°C wire in accordance with the National Electric Code (NEC) guidelines where the conductor size is not specified in the submittals or unit instructions. A disconnecting means and short-circuit protection must be installed ahead of the starter, unless they are included as part of the starter.

Line Entry – Power Supply Wiring

Line power entry into the UnitMount™ starter is thru a removable panel located on the top of the starter enclosure. In order to prevent debris from falling inside the enclosure the panel should be removed prior to drilling or cutting the panel to allow the installation of the wire or conduit.

⚠ CAUTION

To avoid damage to starter components, always remove any debris from inside the starter panel. Debris may cause an electrical short which can seriously damage the starter components.

The wire or conduit must be properly supported and protected as it enters the starter enclosure. Do not allow the abrasion of wire insulation on sharp panel edges etc.

After the power wiring to the starter is installed, the wire entry into the starter enclosure should be sealed as well as possible to prevent the entry of dirt, debris, or moisture into the starter enclosure.

Trane recommends the use of copper conductors to connect the 3-phase power supply to the UnitMount™ starter.

⚠ CAUTION

To avoid corrosion or overheating, use only copper conductors for terminal connections.

Make sure the incoming power wiring is properly phased, and if multiple conductors per phase are used, that each power supply conduit run to the starter carries the correct number of conductors to ensure equal phase representation, see Figure 2.

Figure 2

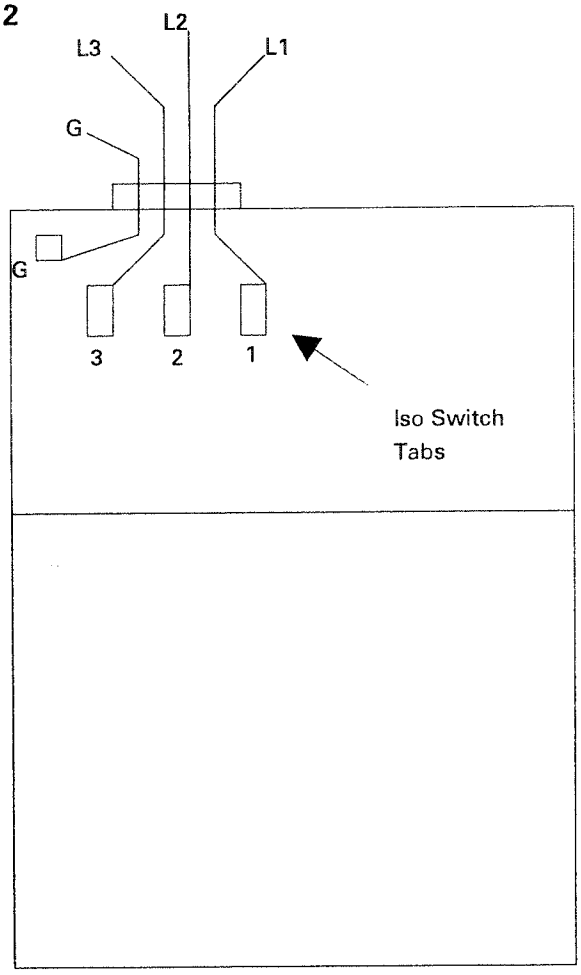

As you install the power supply conduit, make sure that its position does not interfere with the serviceability of any of the unit components, nor with plant room structural members and equipment.

The incoming power lines must not apply excessive stress or force to the tabs of the isolating switch. Ensure the lines or conduit are properly supported in the panel at the entrance to the enclosure.

Also, assure that the conduit is long enough to simplify any servicing that may be necessary in the future (e.g. starter removal).

The use of flexible conduit may be desired to enhance serviceability and minimize vibration transmission.

Line Connection

Connection of the incoming line to the starter is by the use of terminal lugs bolted to the line tabs on the top of the isolation switch. Again, ensure the power is properly phased. Use field provided crimp-type terminal lugs that are properly sized for the application. Grade 5, 3/8-16 steel hardware should be used to connect the lugs to the isolation switch tabs. Carefully tighten each connecting bolt to 25 ft-lbs.

The incoming power lines must not apply excessive stress or force to the tabs of the isolating switch.

Ground Connection

A copper bus for the incoming ground connection is provided in the left side of the enclosure.

Inspection Before Start-up

Each UnitMount™ Starter is properly adjusted at the factory before shipment. However, vibration and mechanical stresses imposed by transit and installation can adversely affect starter adjustment; therefore, a final inspection is essential before energizing. Refer to the inspection procedures defined in the Inspection and Maintenance section of this manual. If this inspection reveals the starter has come out of adjustment, the starter should be re-adjusted according to the procedures in Cutler-Hammer bulletins I.B.48034 and I.B.48018N.

Inspection procedures require closing and opening the isolation switch with the main door open. This requires override of the door safety interlock as described in the maintenance section of this manual. Always ensure the main line power to the starter is locked OFF prior to overriding the door safety interlock.

⚠ WARNING

Hazardous Voltage!

Defeating or disengaging safety interlocks on a UnitMount starter that is connected to a power source may result in property damage, bodily injury or death.

Do not defeat or disengage any safety interlocks when the starter is connected to any power source.

Instructions For Limited Access Installations

If required, additional clearance for unit rigging and installation procedures can be obtained by removing the unit mounted starter on chillers so equipped. The following procedure assumes the chiller is new and has never been installed and therefore there is no electrical power connected to the chiller.

1. Mark or label and disconnect, at the compressor motor terminal lugs inside the starter panel, the power wiring between the starter and the motor terminals.

2. Mark or label and disconnect the control wiring entering the starter panel. Remove the control wiring conduit and/or IPC bus from the starter panel.

3. Remove the bolts securing the bottom of the starter to the brackets on the evaporator.

4. For moving the starter panel away from the chiller it is recommended that a fork truck be used. Position the truck so that it is ready to take up the weight of the starter panel. The panel without PFCCs will weigh approximately 600 lbs. (272 Kg). With PFCCs the panel will weigh approximately 750 lbs (340 Kg). The panel is heavy and must be adequately secured before moving.

   Use care to prevent the forks from damaging the enclosure and/or the enclosure finish.

   If the use of a fork truck is not possible, the starter may be supported and lifted away from the chiller using the two lifting eyes that are located on the top of the starter. See the figure below.The proper use of a spreader bar is required. The lifting force applied to the eyes must be vertical. See Figure 3.

   If the starter enclosure is lifted using the eyes then the use of a spreader bar is required. Always use properly rated slings or chains with safety hooks or shackles. Do not allow the angle between the lifting cables/chains and the spreader bar to be less than 45 degrees.

Figure 3

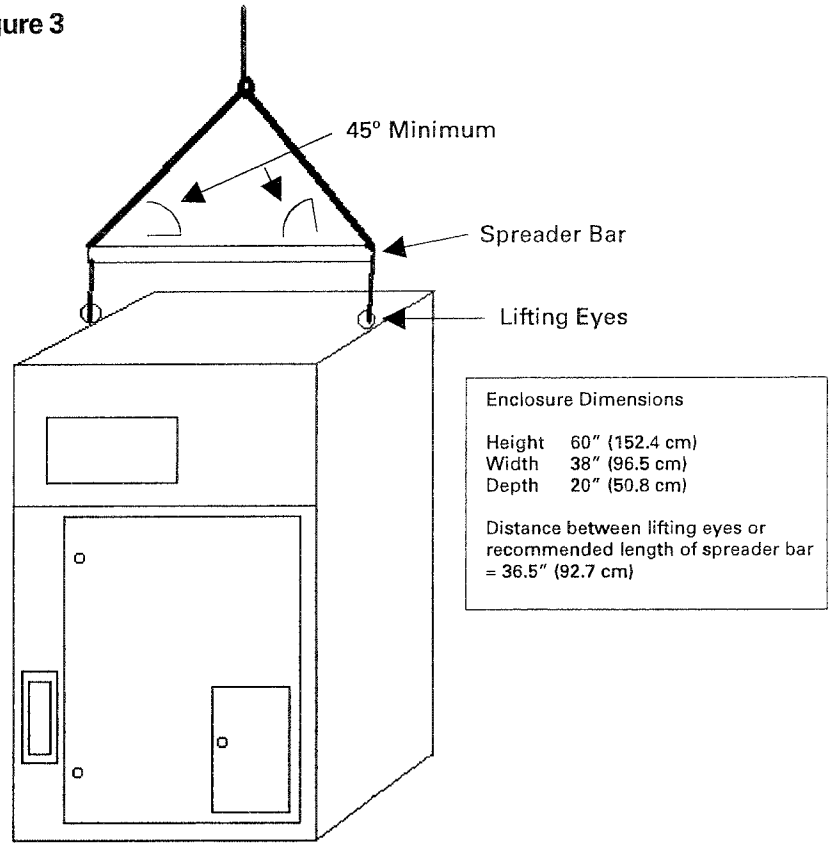

5. Loosen the bolts which secure the starter enclosure to the flange on the motor. Steady the starter as the retaining bolts are removed because the panel may tip forward.

⚠ WARNING

Heavy Objects!

USE EXTREME CARE WHEN MOVING HEAVY COMPONENTS. THE STARTER MAY TIP IF MISHANDLED.
Failure to use caution could result in personal injury or death.

6. Support the weight of the starter panel with the fork truck or hoist/ lifting eyes and carefully remove the starter panel from the chiller.

7. Store the starter panel in a clean and dry location with ample air circulation and heat to prevent condensation from occurring. Always protect the starter from dirt and moisture.

8. When ready, reassemble the panel onto the chiller in the reverse order.

Inspection and Maintenance

Note!

Each UnitMount™ starter is properly adjusted at the factory before shipment. However, vibration and mechanical stresses caused by shipping and installation can affect the starter adjustment. Always inspect the starter before first energizing the starter.

⚠ WARNING

Hazardous Voltage!

There is a hazard of electric shock whenever working on or near electrical equipment. Electric shock may cause injury or death. Turn off all power supplying the equipment before starting the work. Lock-out the disconnecting means using a proper "lock-out or tag-out" system.

PRE-START INSPECTION

With the power to the starter locked OFF, panels on the sides of the starter enclosure may be removed in order to provide improved access to interior components and connections. Each access panel contains several screws that must be removed by working from the inside of the enclosure. Again, always ensure the power to the starter is locked OFF before removing any panels, and always correctly reinstall any removed panels before reenergizing the starter.

Prior to the initial energizing of a UnitMount Starter it is required that the commissioning technician perform an inspection.

Inspect the starter closely for any damage that may have occurred during shipping or installation. Check all hardware for tightness.

Remove any loose dust, dirt, or debris (scraps of wire, tools, etc.) that may have entered into the starter. Use of a vacuum cleaner is recommended.

Ensure no moisture or condensation is present in the starter enclosure.

Perform a vacuum integrity test as described in the maintenance section.

Check the ratings shown on the contactor label. Confirm the indicated control voltage is correct for the application (i.e. 110v/50Hz or 120v/60Hz).

Connect auxiliary control power and sequence the control power signal(s) to "dry-run" the circuit, including closing the contactor with the main power circuits de-energized and locked out. Refer to the maintenance section for instructions to connect auxiliary control power.

Check the insulation level of the starter and record the value for future reference. See the maintenance section.

With the main power to the chiller locked off, check the integrity of the door and isolation switch interlock mechanism. With the starter door open you should not be able to close the isolation switch. With the starter door closed and with the door latch screws fully tightened the isolation switch should operate normally.

With the main power to the chiller locked off, close and open the isolating switch at least three times to check the performance of the operating mechanism. Observe the operation of the switch thru the viewing window.

With the main power to the chiller locked off, check the integrity of the isolation switch and contactor interlock mechanism. Close the contactor using test power (refer to the maintenance section of this manual) and verify that the isolation switch cannot be operated while the contactor is closed. Do not apply excessive force to the isolation switch during this testing or severe damage to the mechanism may occur. If it is desired to test the operation of this interlock with the starter door open it will first be necessary to temporarily defeat the door interlock. To defeat the operation of the door interlock: pull the door interlock lever to the right, an assistant should then pull the latch lever on the handle and operate the switch.

MAINTENANCE AND TESTING

A starter maintenance program should be established as soon as the chiller has been installed and put into operation. After the starter has been inspected several times and the conditions noted, the frequency of inspections can increased or decreased to suit the conditions found. As an absolute minimum, it is recommended that the starter receive a general inspection two or more times a year, and a more detailed inspection at least once a year.

General

The starter must be kept clean and free of dust, dirt, debris, and insects. Use a vacuum to clean the enclosure as thoroughly as possible. Dust in the actual contactor itself can be removed by gently blowing the contactor with dry compressed air that is free from lubricants. Do not use compressed air to clean the remainder of the enclosure because of the risk of pushing debris into critical components.

Verify wiring integrity by grasping each wire and pulling to check tightness.

Visually check for hairline cracks in high stress areas such as the mechanical interlock brackets, contactor baseplate, auxiliary contact mounting bracket, etc.

Inspect for loose joints that produce excess heat and discolor conductors. Verify the insulation has not been damaged by high temperatures. Use care to not over-torque bolts while verifying tightness.

Torque Values

Table 3

Recommended Torque Values for class 8.8 Metric Hardware (unless otherwise specified in the instructions)

Diameter (mm)	Torque (N-m)	Torque (lb-in)	Torque (lb-ft)
4	2.8-3.1	24-27	
5	5.6-6.2	49-55	
6	9.4-10.4	83-92	
8	22.9-25.4	203-225	17-19
10	45.5-50.6	402-447	34-37
12	79.2-88.0	701-779	58-65

Ensure all panels, covers, arc shields, etc. are correctly in place.

Ensure no water is present in the starter enclosure. If water is present, determine it's source and correct it.

Insulation Level Test

Check the resistance between poles and from each pole to ground with a megger meter. The use of a 1000 to 5000 Vdc megger is acceptable. Record all readings. It is not practical to specify an absolute value for this reading since it is dependant on other connected apparatus and conditions of service. However, any unusually low meg readings (below 1 meg per 1000 volts) or an abrupt reduction in a reading when it is compared to previous readings, could be an indication of an issue that requires investigation and correction.

Interrupter Wear Check

The vacuum interrupters used in the UnitMount™ medium voltage starters are designed for a long electrical life. In normal usage up to 300,000 operations may be accomplished before replacement is recommended. If it is desired to check the actual amount of wear in the interrupters it may be accomplished using the procedure given in Cutler-Hammer Instructional Booklet I.B. 48018N.

Vacuum Integrity Test

Because of the extremely high voltages and specialized tools involved in performing a proper vacuum integrity test of the contactor, it is not recommended that the Trane chiller technician perform this test as part of a normal commissioning. If, however, a problem later develops or if it is desired to do this test as a part of a scheduled maintenance program, the Trane technician should only perform this test if he is properly trained and equipped for the task. If this test is desired it is commonly recommended that a Cutler-Hammer technician provide this service. Refer to Cutler-Hammer bulletin I.B. 48018N.

Contact Resistance Test

Because of the high voltages and specialized tools involved in performing a proper contact resistance test of the contactor, it is not recommended that the Trane chiller technician perform this test as part of a normal commissioning. However, if a problem later develops or if it is desired to do this test as a part of a scheduled maintenance program, the Trane technician should only perform this test if he is properly trained and equipped for the task. If this test is desired it is commonly recommended that a Cutler-Hammer technician provide this service. Refer to Cutler-Hammer bulletin I.B. 48018N.

Isolation Switch Maintenance

The isolation switch of the UnitMount™ starter should be inspected and have minor maintenance performed on it at least once a year. During the maintenance Cutler-Hammer conductive grease (C-H part # 7274A48H02) should be applied lightly to the contact surfaces of each break jaw. Avoid placing any lubrication on the insulation. Failure to regularly lubricate the break jaws may result in a failure of the switch to properly open or close. For cleanliness checks, alignment checks, adjustments, and lubrication refer to Cutler-Hammer Instructional Booklet I.B. 48034.

Test Power Connection

The low voltage control circuits of the UnitMount starter are located in the compartment immediately behind the small door on the lower right front of the starter. Inside the compartment are located the CH530 Starter LLID, terminal strips, test power connection, and other low voltage control components.

The control circuits of the UnitMount starter can be checked with the starter isolation switch 'open' (the main power is OFF), and temporary 110/120vac test power connected. Apply the test power using the test plug that is mounted in the low voltage compartment.

Open breaker 2Q1 and remove the test plug from the unwired receptacle that is mounted in the top of the low voltage compartment. Connect 110/120vac test power to the starter's test plug using a good quality heavy-duty polarized extension cord (polarized plugs and cords have one blade slightly wider than the other and can only be inserted one way into the outlet). The other end of the test power extension cord should be connected to a dependable 110/120vac source (i.e. wall outlet) that is capable of providing 15 to 20 amps of service.

With the test power applied the CH530 controls of the chiller will be active. The different starter components can then be exercised and tested using the CH530 (via the proper laptop service tool) to command them. The other chiller components including the oil sump heater and the EarthWise™ purge will also be operational with the test power connected.

When testing is complete and the use of temporary test power is no longer desired, the extension cord should be removed and the test plug re-inserted into the unwired receptacle before closing the isolation switch.

SL Contactor DIP Switch Settings

If issues or problems occur in the operation of the UnitMount™ starter SL medium voltage contactor, it would be recommended to check the DIP switch setting on the contactor's control board and to also check the actual output signal of the control board. The correct DIP switch settings forTrane UnitMount applications are shown below. Refer to Cutler-Hammer Instructional Bulletin I.B. 48018N for more detailed instructions.

Applied Control Voltage

	Switch				
Voltage	1	2	3	4	9
110/50	On	On	Off	Off	Off
120/60	Off	On	On	Off	Off

Ensure the R3 jumper is installed.

Dropout Time
(the recommended default setting is 50 ms)

Dropout	Switch			
Time	5	6	7	8
30 ms	On	Off	Off	Off
50 ms	Off	On	Off	Off
130 ms	Off	Off	On	Off
250 ms	Off	Off	Off	On

To test the output signal of the SL contactor control board it is first necessary to apply the rated control voltage (110v/50hz or 120v/60hz) across terminals 1 and 2 of the contactor control board (this provides a "start" signal).Terminals 3 and 4 on the contactor control board must remain connected with the factory installed jumper. Measure the DC output voltage across terminals 5 and 6 of the contactor control board. The voltage measured should be 9 to 16 vdc. If voltage is not found the board must be replaced.

Across the Line Starting Sequence – Trane CH530 Control

On a call for cooling, the CH530 chiller control will begin its starting sequence. For the starter, the CH530 first confirms that its transition complete input signal is not present. Note: even though an across the line starter does not have a true transition, the CH530 still requires the use of a transition complete input signal as part of it's method of confirming the motor has accelerated. If the transition complete input signal is found, the diagnostic "Transition Complete Input Shorted" will occur and the start sequence will be aborted.

If the transition complete input signal is not found, the CH530 will continue with the starting sequence by closing it's "Stop" and "Start" relays on the Starter module 2A1. Control power will flow through the Starter module contacts to the 2K1 contactor, which will energize and close it's contacts. An auxillary switch on 2K1 will be closed by the action of 2K1, and allows power to flow to holding relay 2K11, 2K11 closes its contacts and locks itself and 2K1 into an energized state. The "Start" relay on the Starter module will open it's contacts 2 seconds after being closed, but the contactor 2K1 will remain energized because of the action of holding relay 2K11. The "Stop" relay on the Starter module remains closed whenever the compressor is running.

After closing contactor 2K1 the CH530 monitors the motor amp draw. The CH530 determines that the motor has successfully accelerated when the amp draw drops to less than 85% of unit RLA for 1.5 continous seconds. For most across the line starter applications the total time to accelerate the motor is typically less than 6 seconds. A maximum allowable acceleration time limit can be set in the CH530 control and is usually set at 6 seconds. If the acceleration of the motor is not confirmed within this time after closing contactor 2K1, the diagnostic "Compressor did not Accelerate – Shutdown" will occur and the start sequence will be aborted.

If acceleration is confirmed within the allowed time, the CH530 will then close its "Run" relay contacts on Starter module 2A1. Closing the Run relay contacts will apply control power to the Transition Complete input of the Starter module and the starting sequence is complete. If the Run relay or the Transition Complete inputs fail to achieve the correct state a "Starter did not Transition" diagnostic will be called out and the chiller will be stopped.

Wiring Diagram Designator	Description	Wiring Diagram Designator	Description
2Q2	Isolation Switch	2T8, 2T9	Potential Transformers
2K1	Start Contactor	4M1	Compressor Motor
2F1, 2F2, 2F3, 2F4	Fuses	2K11	Interlock Relay
4C1	PFCC (optional)	2T5	Control Power Transformer
2T1, 2T2, 2T3	Current Transformers	2Q2K1	Isolation Relay
2K9	Ground Fault Relay (optional)	2Q1, 1Q1	Breakers
2A1	Starter Module	2XP1	Test Plug

CH 530 SCHEMATIC WIRING CVHE, CVHF, CVHG
UNIT MOUNTED ACROSS THE LINE STARTER

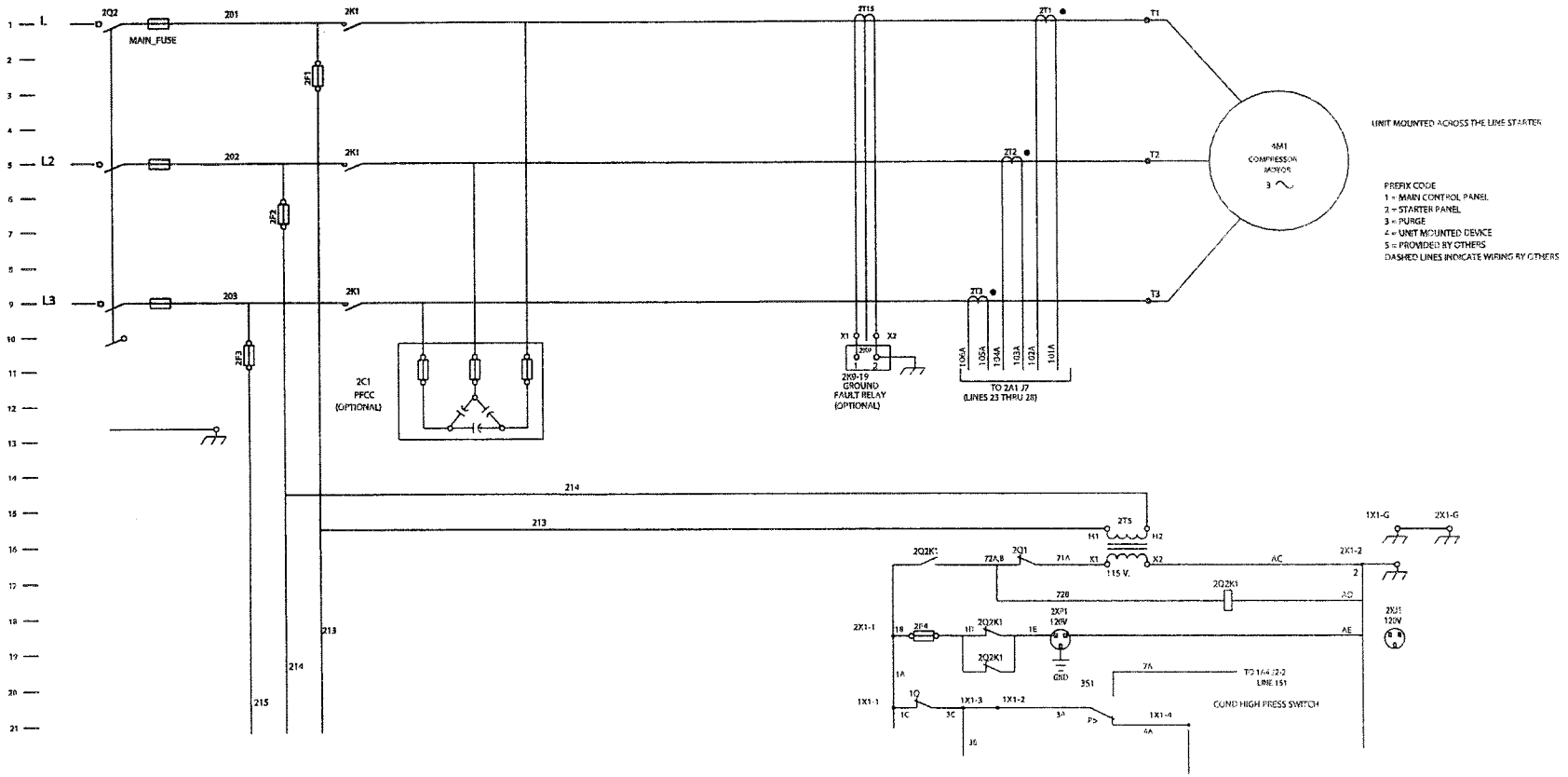

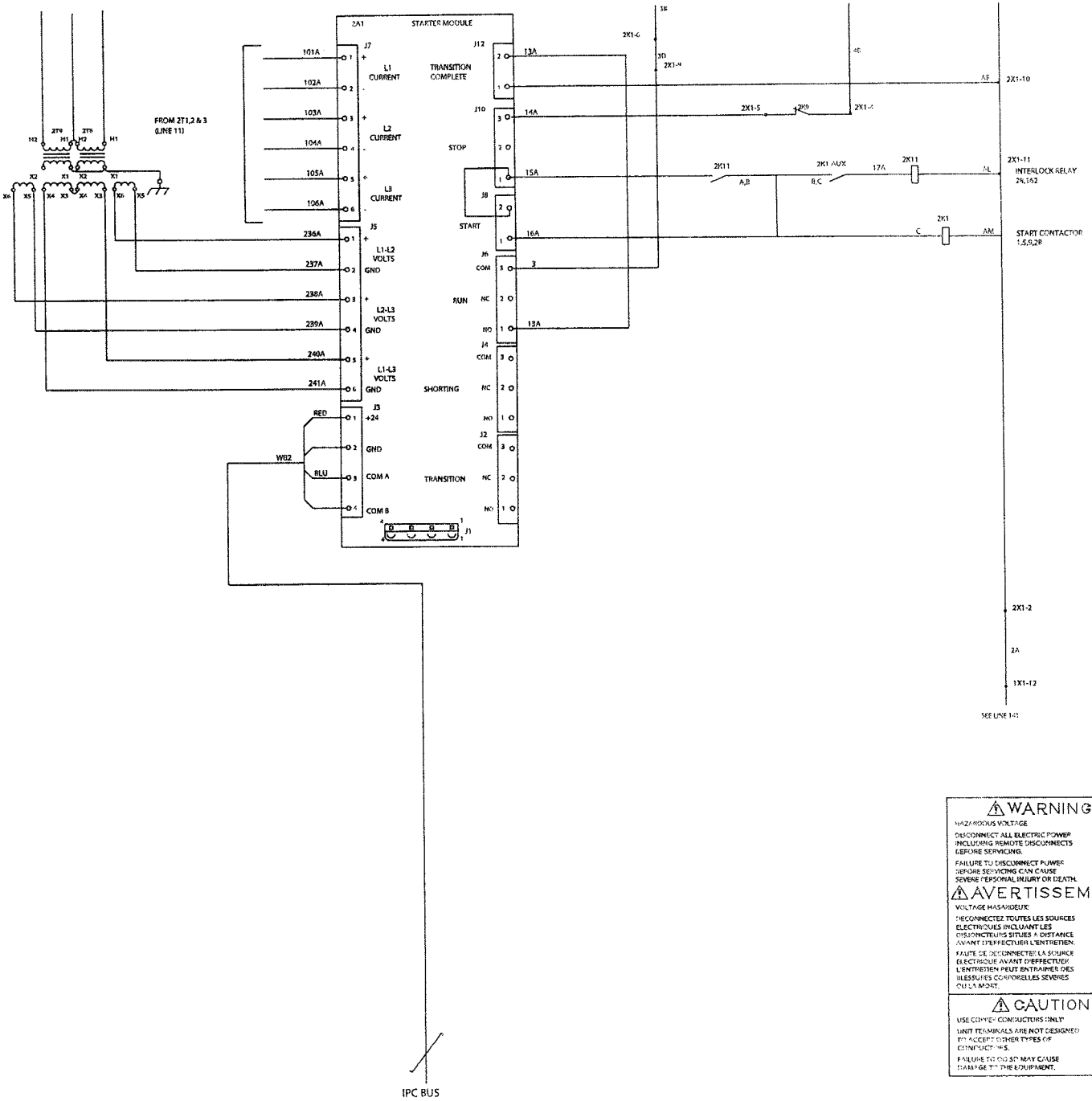

⚠ WARNING

HAZARDOUS VOLTAGE

DISCONNECT ALL ELECTRIC POWER INCLUDING REMOTE DISCONNECTS BEFORE SERVICING.

FAILURE TO DISCONNECT POWER BEFORE SERVICING CAN CAUSE SEVERE PERSONAL INJURY OR DEATH.

⚠ AVERTISSEMENT

VOLTAGE HASARDEUX

DÉCONNECTEZ TOUTES LES SOURCES ÉLECTRIQUES INCLUANT LES DISJONCTEURS SITUÉS À DISTANCE AVANT D'EFFECTUER L'ENTRETIEN.

FAUTE DE DÉCONNECTER LA SOURCE ÉLECTRIQUE AVANT D'EFFECTUER L'ENTRETIEN PEUT ENTRAÎNER DES BLESSURES CORPORELLES SÉVÈRES OU LA MORT.

⚠ CAUTION

USE COPPER CONDUCTORS ONLY

UNIT TERMINALS ARE NOT DESIGNED TO ACCEPT OTHER TYPES OF CONDUCTORS.

FAILURE TO DO SO MAY CAUSE DAMAGE TO THE EQUIPMENT.

General Component Layout

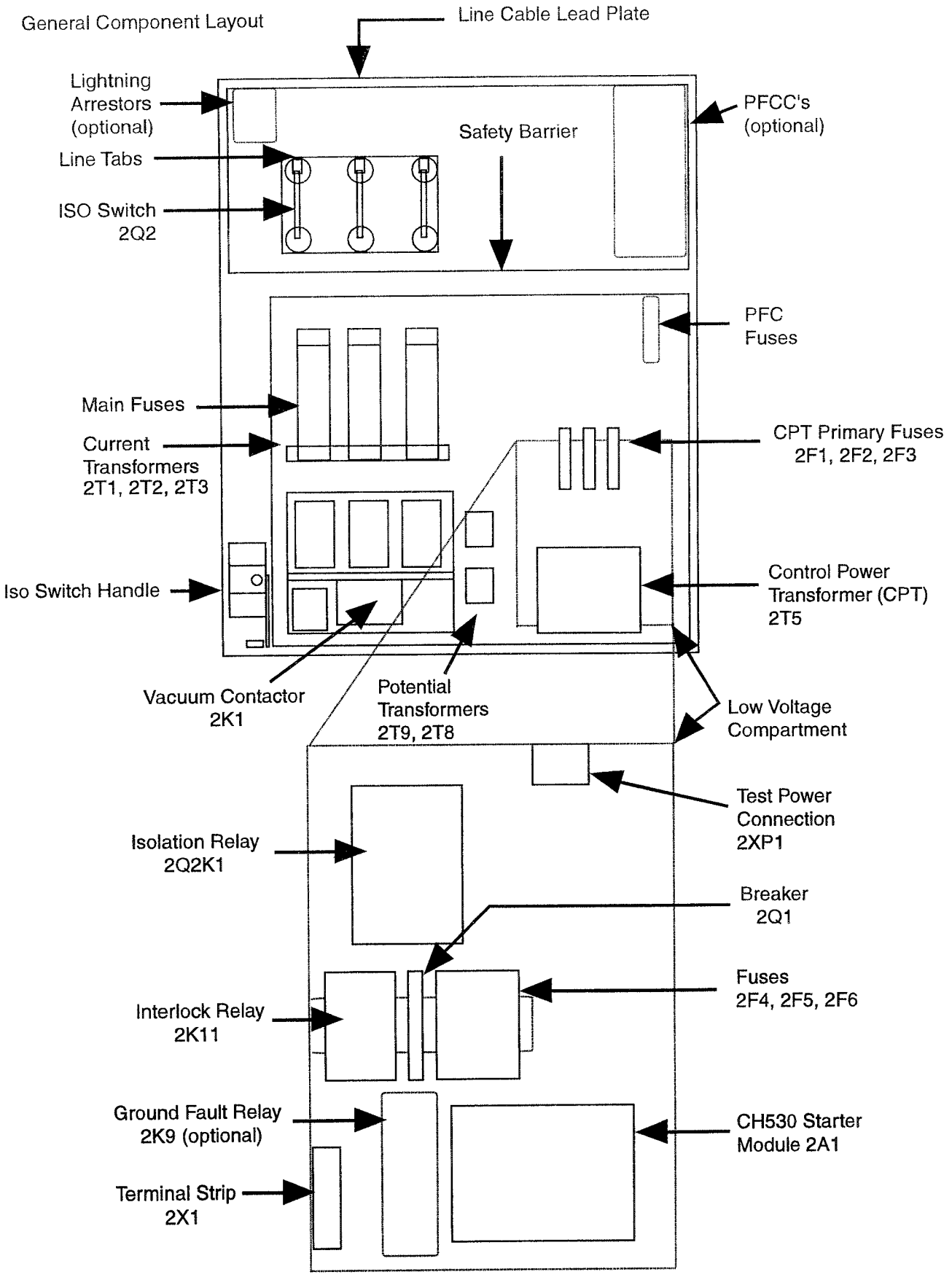

TRANE

Trane
An American Standard Company
www.trane.com

For more information contact your local district office or e-mail us at comfort@trane.com

Literature Order Number	CVHE-SVB06A-EN
File Number	CVHE-SVB06A-EN-0402
Supersedes	New
Stocking Location	La Crosse

Trane has a policy of continuous product and product data improvement and reserves the right to change design and specifications without notice. Only qualified technicians should perform the installation and servicing of equipment referred to in this publication.

Summary of Proposals
Sheraton Grand Hotel

1. RTHA-350 – reconditioned chiller installed $58,453.00 + tax

2. Option on Proposal One – Replace bypass valve on cooling tower #3. Parts provided by customer. Replace 8" valve in bypass line. Use existing actuator. Install four (4) 8" isolation valves in condenser water piping. This will isolate the two condenser water loopss. Work to be done after hours. Install frequency drive with bypass on #3 condenser water pump. This will allow chiller to start with cold tower water. Price includes temperature controls to control drive.
$10,509.00 + tax

3. Automation tie-ins to RTHA-350 $ 1,800.00 + tax

4. Refrigerant Monitor installed and tied in to CSI part of ASHRAE 15-1992 $ 7,220.30 + tax

5. Chiller room exhaust system final part of ASHRAE 15-1992 $ 5,261.00 + tax

6. Replacement of AHU 8 & 9 and duct changes including CSI tie-ins $38,990.00 + tax

7. Building B exhaust fans per STR-3569 - Changes to motor starters per Sam Toub $21,731.00 + tax

Payment Terms: 30% upon acceptance, 40% upon equipment delivery, 30% upon completion.

TRANE®

General Service Bulletin

CH530 Software Mandatory Retrofit for All Field Units

CVHE, CVHF, CVHG

ORDER No: **CVHE-SVB09A-EN** DATE: July 31, 2002

Introduction

The purpose of this bulletin is to advise customers of a problem associated with Tracer CH530 Controller used on CenTraVac™ units. This bulletin is to inform the field of the failures and to describe the corrective action. Typical product applications include the CVHE, CVHF and CVHG family of chillers. The action described in this bulletin is being taken to address a equipment hazard concern.

NOTICE: Warnings and Cautions appear at appropriate sections throughout this literature. Read these carefully.

⚠ **WARNING** *indicates* a potentially hazardous situation which, if not avoided, could result in death or serious injury.

⚠ **CAUTION** *indicates* a potentially hazardous situation which, if not avoided, may result in minor or moderate injury. It may also be used to alert against unsafe practices.

CAUTION *indicates* a situation that may result in equipment or property-damage only accidents.

© 2002 American Standard Inc. All Rights Reserved

Discussion

CAUTION

Equipment Damage!

Due to software failure DynaView™ controllers are locking up. While in this locked up state the compressor is off which creates operation problems such as all the oil being pumped out of the sump. Failure to download new software could result in equipment damage.

The potential for this hazard is severe oil pump and compressor damage.

Operational Problems are:

- DynaView Main Processor Lockups; Oil Pump remains ON after post lube, and Display does not report valid information.

  The Main Processor problem occurs randomly during chiller post lube shutdowns. The oil pump will be found running after the post lube time expires. This problem only occurs when the Earthwise™ Purge is in Auto or Stop. **To temporarily avoid the potential problem select ADAPTIVE Purge mode (Default) until new software can be downloaded.**

- Purge Liquid Level nuisance alarms; chillers are encountering many "High Liquid level warnings and alarms". The purge software has been modified to prevent these nuisance indications.
- AFDD Inlet Guide Vanes and Drive Speed Stability (Hunting). The rate of motor speed change has been modified to better match the rate of IGV changes.
- Additional enhancements with the new software:
  Gauge Refrigerant Pressure choice on DynaView
  Improved Restart Inhibit Feature

CTV Main Processor 4.0 Software (6200-344-04-00) Details

1) Chiller :

a) Corrected the Main Processor lockups as seen in the field. (Root cause was discovered to be caused by a purge control function. See Purge item a)
b) Add new restart inhibit function.
c) Added new setpoints for Restart Inhibit Free Starts, Restart Inhibit Start to Start and, Restart Inhibit Diagnostic enable/disable.
d) Added gauge/absolute switch to pressure display for DynaView
e) Added Amps and Volts to the ASHRAE Chiller Log menu.
f) Added a new sub-mode for min capacity time remaining.
g) Change HGBP Valve Travel Time setpoint max to 180 seconds.

2) **Purge:**
   a) Set the processing of the Purge Liquid Level Switch transitions. This corrects the MP lockups seen in the field.
   b) Corrected the nuisance Purge Liquid Level Too High diagnostics being seen in the field by changing;
      - Purge Liquid Level Too High Warning diagnostic being called out from 30 seconds to 20 minutes
      - Purge Liquid Level Too High Continuously diagnostic being called out from 15 minutes to 20 minutes.
      - Purge Liquid Level Too High Continuously diagnostic being called out with four warnings in 2 hours to four warnings in 4 hours.
   c) Auto carbon regeneration is no longer allowed in Purge stop mode. Previously it was allowed in all modes. Manual carbon regeneration while in the Purge stop mode can be initiated from TechView™.
   d) The Purge Carbon Regeneration Temperature Not Satisfied diagnostic is now called out at the Carbon Regeneration Temperature setpoint - 30 F and lower after 4 hours. It used to be called out at the Carbon Regeneration Temp setpoint and lower. If the Purge Carbon Regeneration Temperature Not Satisfied diagnostic occurs, regeneration cycle will now continue as if it met the setpoint. Regeneration cycle used to stop upon occurrence of the diagnostic.

3) **AFD/IGV Control:**
   a) AFDD Chillers- AFD/IGV Control: These items will correct the "hunting" issue being seen in the field on AFD chillers.
- Implemented scaling factor between IGV/AFD Control.
- Filtered the IGV/AFD speed change in response to field data.
- Added filter to slow down AFD speed changes. This allows time for the IGV to position before the speed suddenly changes.
- Surge recovery algorithm now increases speed 1 Hz every 5 seconds.
- Added minimum pressure coefficient setpoint to TechView. Compressor is not allowed to drop below minimum pressure coefficient at startup.

Repair Procedure

Install CTV Main Processor Software, version 4.0 and associated TechView™ Software version 4.03 posted to TRANE.COM July 17, 2002.

Please note that this retrofit applies to already STARTED chillers, chillers not already started can be software upgraded as part of the normal startup.

If the unit has started prior to the software release arrangements should be made to immediately complete the retrofit.

Parts Ordering Information

No parts need to be ordered.

Material Disposition

No disposition necessary in the field.

Product Changes

All CVHE, CVHF, CVHG units shipped after July 17, 2002 will have new CTV Main Processor Software, version 4.0 installed.

Trane
A business of American Standard Companies
www.trane.com

For more information, contact your local district office or e-mail us at comfort@trane.com

Literature Order Number	CVHE-SVB09A-EN
File Number	SV-RF-CTV-CVHE-SVB09A-EN- 071802
Supersedes	New
Stocking Location	Electronic – La Crosse

Trane has a policy of continuous product data and product improvement and reserves the right to change design and specifications without notice. Only qualified technicians should perform the installation and servicing of equipment referred to in this bulletin.

TRANE®

General Service Bulletin

Rockwell water cooled AFDD liquiflow 1.5 PIC board field repair on 350, 450, 600, 750 & 1000 HP drives (CVHE, CVHF, CVHG Units)

ORDER No.: **CVHE-SVB10A-EN** DATE: October 2002

Introduction

The purpose of this service bulletin is to advise you of modification that needs to be made to the power interface control board (Pic).
This repair should be made at unit startup. If already started and running the unit is fine and the retrofit is not mandatory.

Discussion

CAUTION

Equipment Damage!

Components on a Power Interface Control Board could be damaged by isolated voltage spikes. Damaged components may cause failure of the Pic Board.

This is potential equipment damage and corrective action must be taken as soon as possible.

The liquid water-cooled adaptive frequency drive, Liquiflow 1.5 AFDD, has an electronic board in the drive called the Pic board that needs field modification. This is the Power Interface Control Board (Pic).

It has been determined that in a few isolated instances, that when high input line voltage conditions exist along with variations with board components on the Pic board component failures on the board may occur due to voltage spikes. The spike has in some cases damaged components causing failure of the Pic board.

If the board fails you typically get a diagnostics of Low DC buss.

When you look at the board, (Figure 1 and Figure 2), there is a component called a opto-coupler. It is a small square white part approximately ¼" square.

LiquiFlo1.5 Power Interface Controller (PIC) PCB Assembly Optocoupler Removal

Removal of the optocoupler referenced as U2 on the following PIC PCB assemblies is required for proper operation:

Rockwell Part #	Description
179561	600Hp LiquiFlo 1.5 Drive
179843	450Hp LiquiFlo 1.5 Drive
179844	350Hp LiquiFlo 1.5 Drive
179845	1000Hp LiquiFlo 1.5 Drive

The optocoupler is located in the center of the board, as shown in the following pictures:

Figure 1: Close-up View of U2 Location

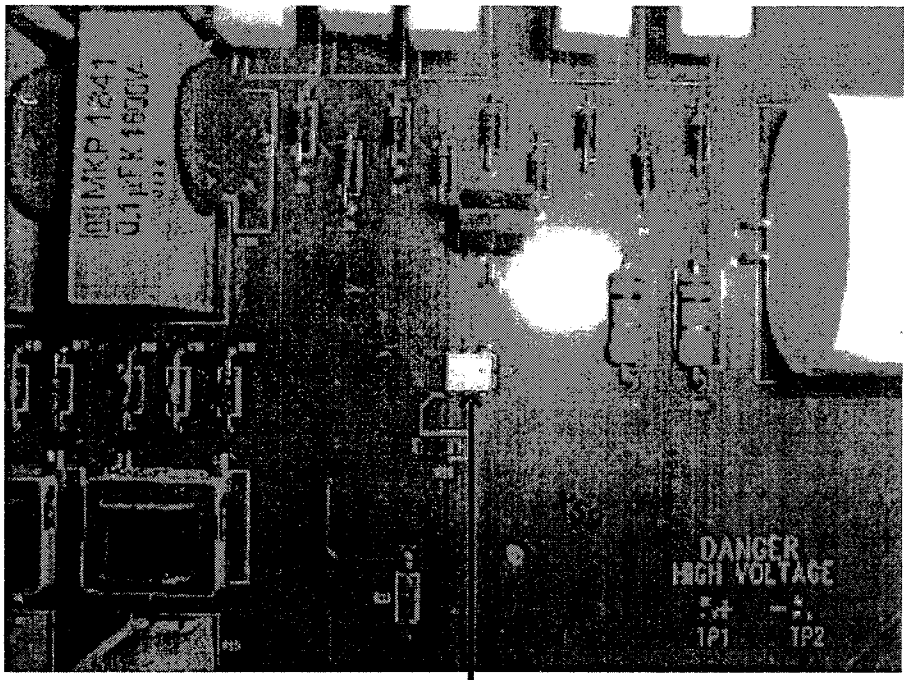

Procedure

WARNING

⚠ Hazardous Voltage!

1. Remove all power from the drive and allow the DC bus to discharge.

© 2002 American Standard Inc. All rights reserved.

CAUTION
Static Electricity

Use a grounding wrist strap which is fabricated with a current limiting resistance for static control. Do not contact grounded objects other than through the wrist straps.

Failure to use it properly can result in static electricity damage.

2. In this retrofit, the PCB can remain mounted while performing the necessary procedures. However, utilize proper grounding procedures when working with the Printed Circuit Board.
3. Locate PIC board on respective drive (please reference manual for board location).
4. Remove the component U2, by clipping each of the six (6) pins on the topside at the board level.
5. Verify that none of the remaining pins are able to short together.
6. Confirm all ribbon cables are connected properly and reapply power.

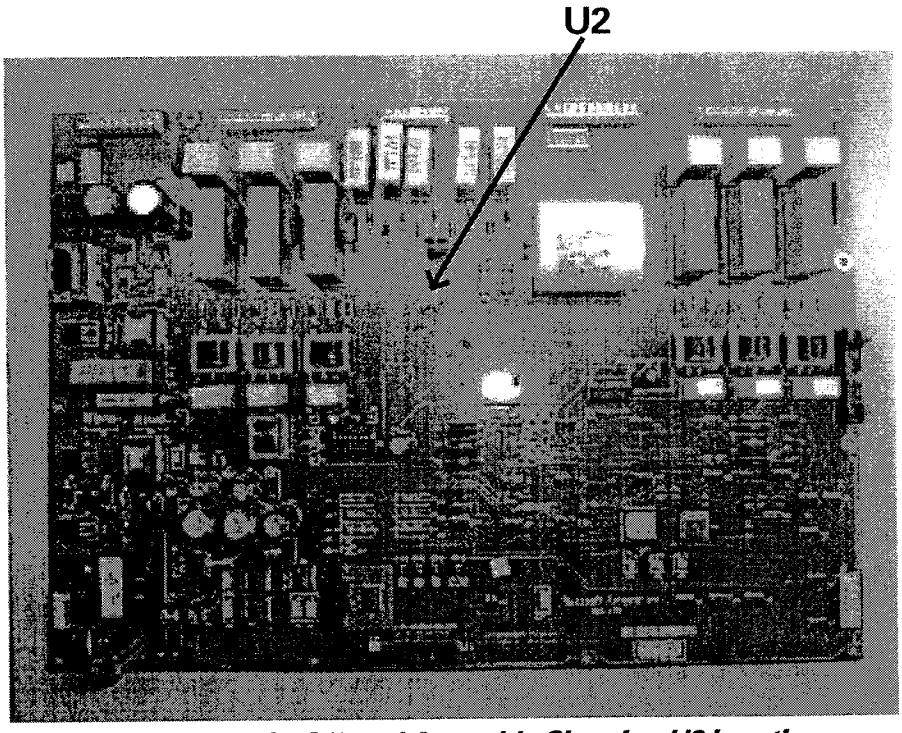

Figure 2: Full view of PIC Board Assembly Showing U2 Location

If the unit has not been started, this opto-coupler needs to be removed. If the unit has already been started it does not have to be removed. The opto-coupler switches a bleeder resistor in and out of the circuit. When we remove it we disable the function so the bleeder resistor is always in the circuit to dampen short voltage spikes at startup.

No functionality is sacrificed by removal of the U2 coupler. All future production Pic boards will have the U2 coupler removed. Pic boards that have been revised will have a revision of Rev 05 shown on the board. Boards that need to have the U2 opto-coupler removed will show a Rev 04 on the board.

Repair Procedure

WARNING

⚠ Hazardous Voltage!

Disconnect all electric power, including remote disconnects before servicing. Follow proper lockout and tagout procedures to ensure the power can not be inadvertently energized. Failure to disconnect power before servicing could result in death or serious injury.

Procedure:

- Remove all power from the drive and allow the DC bus to discharge.
- Utilize proper grounding procedures when handling printed circuit boards
- Locate PIC board on the respective drive (please reference your manual for board location)
- Remove the component U2, by clipping each of the (6) pins on the topside at board level.
- Verify that none of the remaining pins are able to short together.
- Confirm all ribbon cables are connected properly and reapply power.

Parts Ordering Information

No parts to be ordered.

Units Affected

Rockwell water cooled AFDD liquiflow 1.5 PIC board field repair on 350, 450, 600, 750 & 1000 HP drives.

Literature Order Number	CVHE-SVB10A-EN
File Number	CVHE-SVB10A-EN-1002
Supersedes	New
Stocking Location	Electronic Only

TRANE

Trane
A business of American Standard Companies
www.trane.com

For more information contact your local district office or e-mail us at comfort@trane.com

Trane has a policy of continuous product and product data improvement and reserves the right to change design and specifications without notice. Only qualified technicians should perform the installation and servicing of equipment referred to in this publication.

TRANE

General Service Bulletin

CVHF-SB-1

Library	Service Literature
Product Section	Refrigeration
Product	Centrifugal Liquid Chillers
Model	CVHF
Literature Type	Confidential Service Bulletin
Sequence	1
Date	September 16, 1993
File No.	SV-RF-CTV-CVHF-SB-1-993
Supersedes	New

Subject: CVHF Economizer Mandatory Retrofit

Introduction:

The purpose of this bulletin is to address a potential problem with economizer vibration on Model CVHF centrifugal chillers.

Discussion:

The CVHF economizer under some load conditions may exhibit excessive vibration. This vibration may result in the economizers developing cracks in the economizer shell. The cracks are found in the heat stressed area of the shell, around the vent pipe going to the compressor. **A list of units that need to be retrofitted will be sent to the office service manager under separate cover.**

Units Affected:

All CVHF units manufactured before August 5, 1993 or units that do not have bracing on both ends of the economizer and a reinforcement collar around the vent pipe going to the compressor may exhibit this vibration. Not all units are affected, but all units will have the extra bracing installed for added protection. Any CVHF unit meeting the above criteria must be retrofitted.

Since the Trane Company has a policy of continuous product improvement, it reserves the right to change specifications and design without notice. The installation and servicing of the equipment referred to in this booklet should be done by qualified, experienced technicians.

Mandatory Retrofit Procedure:

To reduce the potential for vibration of the economizer, engineering has developed bracing to be installed on each end of the economizer. The bracing is welded to the condenser and the economizer and bolted in the middle for removal. To reinforce the shell area around the vent pipe going to the compressor, a collar is to be welded around the pipe and welded to the pipe and the shell.

- If the unit contains refrigerant; remove it using proper recovery procedures.
- Bolt condenser bracket to economizer bracket using 7/16" bolts.
- Weld bracket (Figure 1) to condenser shell on each end of economizer. Refer to Figure 3
- Weld bracket (Figure 2) to both end plates of the economizer. Refer to Figure 3
- Weld reinforcement collar (Figure 4) around the vent pipe running from the economizer to the compressor. Refer to Figure 5

Note: After welding on the economizer pipe it is recommended that the bolts in the economizer to compressor flange be re-torqued. Welding on the pipe may cause the bolts to loosen.

- Leak test at repair areas and at motor/vent line flange.
- Evacuate and recharge unit using proper charging procedures.

Note: Refer to CTV-SB-60E to check proper charge of unit. Do not rely on the units name plate charge information. Several CVHF machines in the field were discovered to have the wrong charge information on the nameplate. An overcharge may intensify economizer vibration levels.

Parts Ordering Information and Authorization:

The appropriate items listed below are authorized to complete the retrofit on each affected CVHF in the service agencies area of responsibility. The required parts may be ordered through Trane Service Parts using the following Mnemonic numbers. Refer to Tables 1 - 3.

Table 1
Condenser Weld Bracket

Condenser Size (CDSZ)	Bracket, MTG Condenser Drawing Number	Trane Mnemonic Number	Quantity Required Per Unit
080S,L	4534-5032-01	BRK 1843	2
140L, 142S, L	4534-5032-02	BRK 1844	2
210S,L	4534-5032-03	BRK 1845	2
125L	4534-5032-04	BRK 1846	2

©American Standard Inc.

Table 2
Economizer Weld Bracket

Condenser Size (CDSZ)	Bracket, MTG Economizer Drawing Number	Trane Mnemonic Number	Quantity Required Per Unit
All	4534-5033-01	BRK 1847	2

Table 3
Economizer Vent Pipe Collar

Condenser Size (CDSZ)	Collar Half Economizer Drawing Number	Trane Mnemonic Number	Quantity Required Per Unit
080S,L	4534-5034-01	CLR 0135	2
140L, 142S,L, 125L, 210S,L	4534-5034-02	CLR 0136	2

Figure 1 - Condenser Weld Bracket (.25 THD) CVHF (4534-5032)

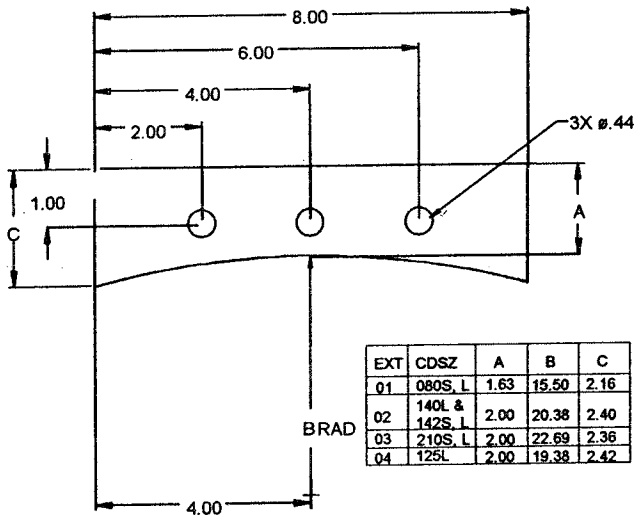

EXT	CDSZ	A	B	C
01	080S, L	1.63	15.50	2.16
02	140L & 142S, L	2.00	20.38	2.40
03	210S, L	2.00	22.69	2.36
04	125L	2.00	19.38	2.42

Figure 2 - Economizer Weld Bracket (.25 THK) CVHF (4534-5033)

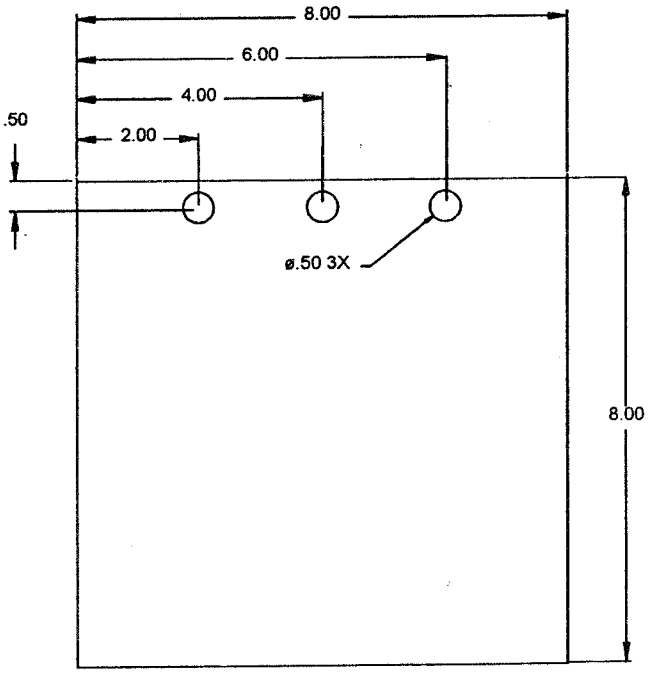

Figure 3 - Detail, Economizer Piping to 3 Stage Compressor

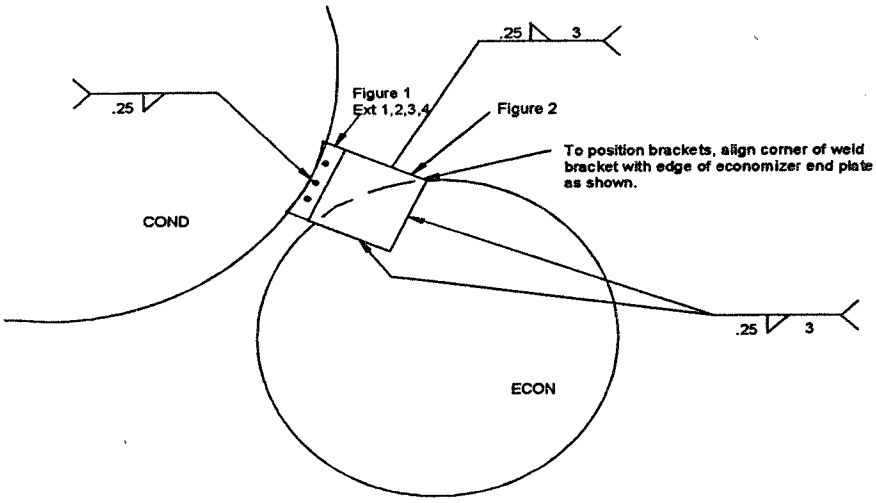

Figure 4 - Economizer Vent Pipe Collar (.25 THK) CVHF (4534-5034)

EXT	CDSZ	A	B	C	D
01	080S, L	3.69	6.50	11.13	5.22
02	125L, 140L 142S, L 210S, L	4.69	7.50	12.87	6.22

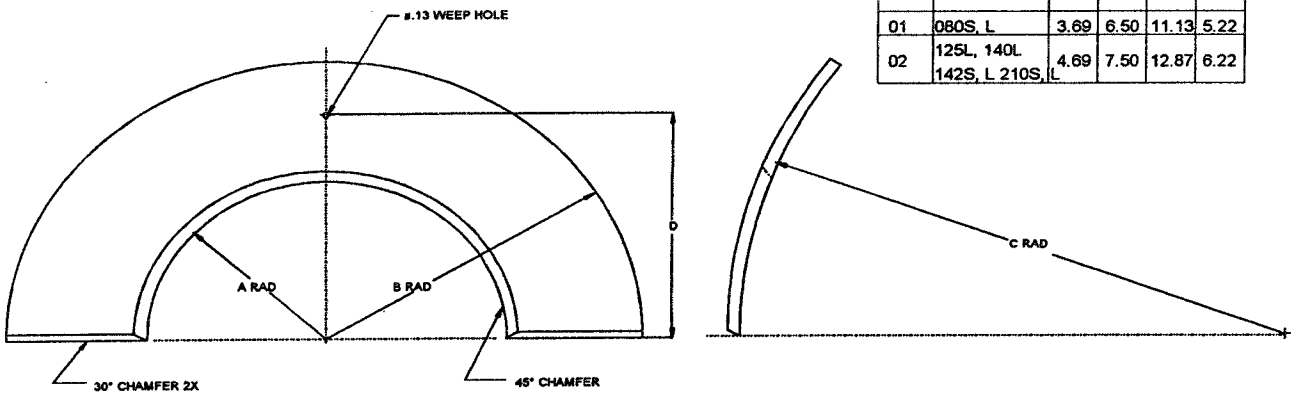

Figure 5 - Collar Detail (Top View), Econ Pipe to Econ

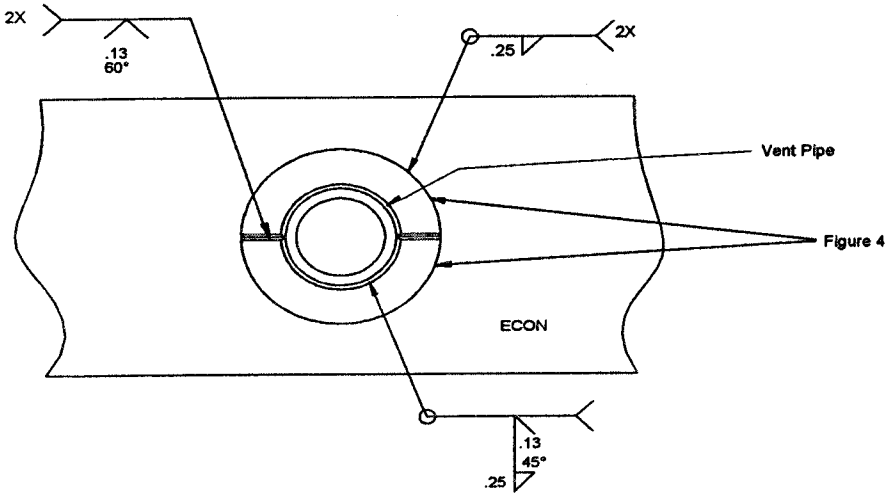

PW

Confidential Service Bulletin

CVHF-CSB-3A

Library	Service Literature
Product Selection	Refrigeration
Product	Centrifugal Liquid Chillers
Model	CVHF/CVHG
Literature Type	Confidential Service Bulletin
Sequence	3A
Date	December 12, 2000
File No.	SV-RF-CTV-CVHF-CSB-3A-1200
Supersedes	CVHF-CSB-3-1000

Subject: CVHF/CVHG Circuit Module Chip Retrofit on CVHF/CVHG Units

Introduction:

The purpose of the Circuit Module chip retrofit is to keep the oil heater energized during the compressor run cycle for early production refrigerant and oil pump centrifugal chillers.

Discussion:

The initial production run of CVHF and CVHG centrifugal water chillers that used the refrigerant/oil pump incorporated a 17-coil 5/8-inch outside diameter copper oil cooler coil located in the economizer. This oil cooler arrangement provided more than required oil cooling which can result in low oil tank temperatures during the compressor shut down sequence. Since the oil tank heater is de-energized during the compressor run cycle, as the unit goes through post lube additional oil cooling takes place before the oil tank heater has a chance to bring the oil temperature up while the compressor is idle. This can result in oil tank temperatures which fall below the 100 degree F threshold and will prevent the chiller from starting in a timely fashion. This problem has been addressed in production with the installation of a 9-coil 5/8-inch copper oil cooler coil instead of the original 17-coil oil cooler. For the refrigerant/oil pump units built with a 17-coil oil cooler, a circuit module retrofit chip is required to help keep the oil temperature from dropping below 100 degree F on unit shutdown. This chip keeps the oil tank heater energized whenever control power is provided to the chiller, both during compressor run and while the compressor is off.

Recommended Action:

Order one KIT07287 for each affected unit. This kit contains a circuit module chip, a ground strap and installation instructions. Install the chip per the instructions supplied in the kit.

Material Authorization:
One KIT07287 for each affected unit.

Material Disposition:
The old chip can be scrapped in the field.

Units Affected:
All CVHF and CVHG centrifugal units with the refrigerant/oil pump that incorporate a 17-coil oil cooler located in the economizer. For the CVHF, this includes units with the refrigerant/oil pump up to but not including design sequence "1P" and for the CVHG units with refrigerant/oil pump up to but not including design sequence "1G". The approximate date of manufacture for these units was January, 2000 to July, 2000.

Parts Ordering Information:
Order one chip per each unit through the PRIDE system, La Crosse Service Parts.

KIT07287, Circuit Module Chip

Production Changes:
No production changes are required at this time.

Labor Authorization:
This bulletin authorizes one hour of labor at standard labor rates to accomplish the chip changeout. No travel time authorized.

Expiration Date:
The expiration date of this mandatory retrofit is **May 31, 2001**.

©American Standard Inc 2000

TRANE

General Service Bulletin

CTV-SB-19D

Library	Service Literature
Product Section	Refrigeration
Product	Centrifugal Liquid Chillers
Model	CTV
Literature Type	General Service Bulletin
Sequence	19D
Date	May 6, 1993
File No.	SV-RF-CTV-CTV-SB-19D-593
Supersedes	CTV-SB-19C-(589)

Literature Changes:

CTV-SB-19A (10/81) - Original issue of bulletin.

CTV-SB-19B (2/87) - Changed recommendation for all oil to be used in all CenTraVac© compressors (excluding CVHCs and LOCVs).

CTV-SB-19C (5/89) - Bulletin revised to include oil additive information and incorporate oil recommendations for Model RTHA Series R CenTraVac© (Table 1).

CTV-SB-19D (5/93) - Bulletin revised to remove RTHA and air cooled CenTraVac© information, recommend oil filter piping modifications.

Subject: Recommendations for: Oil Analysis, Oil Types, Oil Changes and Horizontal Oil Filter Modification On Centrifugal Compressors

Introduction:

This service bulletin provides specific recommendations for oil analysis programs, recommended oils and oil charges for Trane centrifugal compressors. It also gives recommendations for oil filter modifications, to the horizontal position.

Discussion:

The Trane Company recommends use of an oil analysis program with all Trane CenTraVac©s to determine the condition of the oil and the compressor motor bearings. When properly applied, an oil analysis program--such as the one provided by Trane/Service First---can be an important preventative maintenance tool for diagnosing the condition of the unit bearings.

Since the Trane Company has a policy of continuous product improvement, it reserves the right to change specifications and design without notice. The installation and servicing of the equipment referred to in this booklet should be done by qualified, experienced technicians.

Regardless of what oil analysis program is selected, it must be individually tailored to suit the specific requirements of the job in terms of sampling frequency and the types of analysis performed. When requested, Trane/Service First will suggest appropriate oil sampling intervals for a particular unit installation based on job site conditions.

Since oil analysis programs monitor changes in levels of wear metals and other contaminants in the oil over a long period of time, it is important that the oil samples taken are representative; that is, the samples must indicate actual increases in quantities of contaminants like wear metals. Let's look at an example. Ideally, when the oil charge is removed from a unit, the inside of the sump should be cleaned. If the oil charge is simply replaced without cleaning the sump, a certain percentage of the residue including wear metals remains in the unit. Therefore, the next oil sample taken for analysis will not only include contaminants produced since the last oil sample, but also an unknown amount of residue from unit operation prior to that time. This makes it very difficult to establish exact increases in wear metals, and lessens the ability of oil analysis to predict actual wear rates.

Keep in mind that The Trane Company does not recommend annual replacement of CenTraVac compressor oil when: (1) an oil analysis program is in use, and (2) the oil's acid and moisture content is maintained within acceptable levels. Oil analysis results will indicate whether or not the unit's oil charge should be replaced. However, it is important to change the unit oil filter on a yearly basis.

Oil Filter Modification:

To minimize oil loss and refrigerant vapor release it is recommended that the oil filter system be modified to utilize a screw on filter in the horizontal position. In addition to the horizontal oil filter, a refrigeration valve is installed on the top of the assembly. This refrigeration valve will be used for oil sampling.

Refer to figures 1 and 2 for illustration of the following parts:

A) 1 - 3/8 inch ball valve, Apollo number 70-802-3/8 or VAL 4260
B) 1 - 1/2 inch 3 way valve, Apollo number 70-903-1/2 or VAL 4261
C) 1 - 3/8 inch NPT refrigeration angle valve or VAL 0031
D) 1 - Tee
E) Modified oil filter top assembly. The existing oil filter top assembly can be field modified, refer to figure 2 or order new oil filter top (COV 2131).
F) Oil Filter
Oil Filter Bracket (BRK 1804)

Note: If valves with handles are used, remove handles to prevent tampering after installation is complete.

See figures 3 through 7 for key points of modification.

 © American Standard Inc.

Figure 1 - Recommended Modifications.

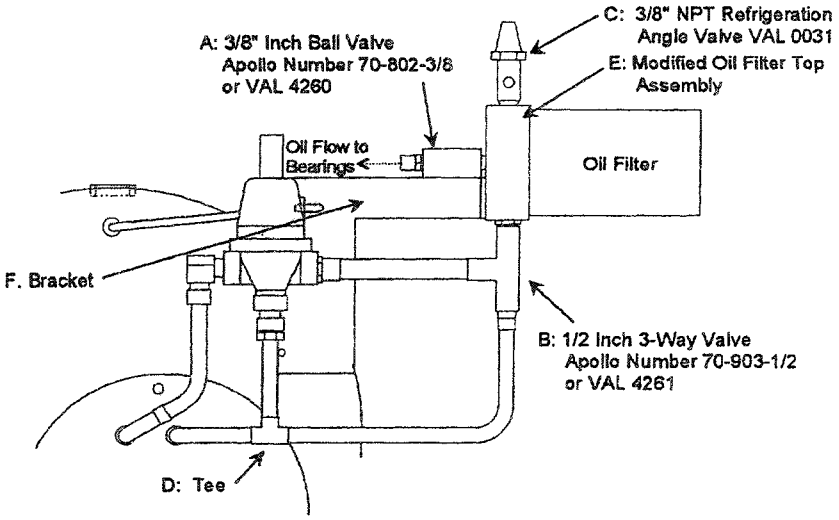

Figure 2 - Oil Filter Top Assembly Modification

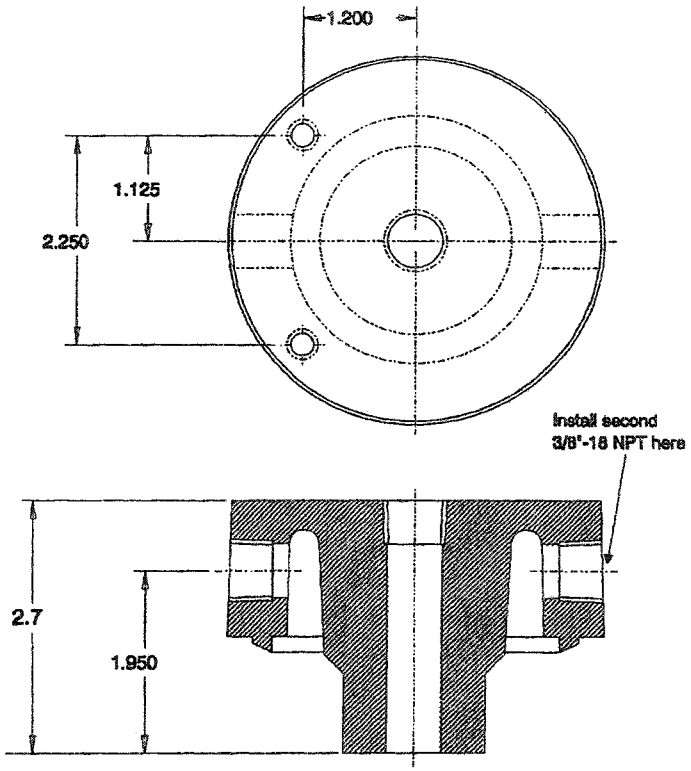

Figure 3 - Oil Filter in Horizontal Position.

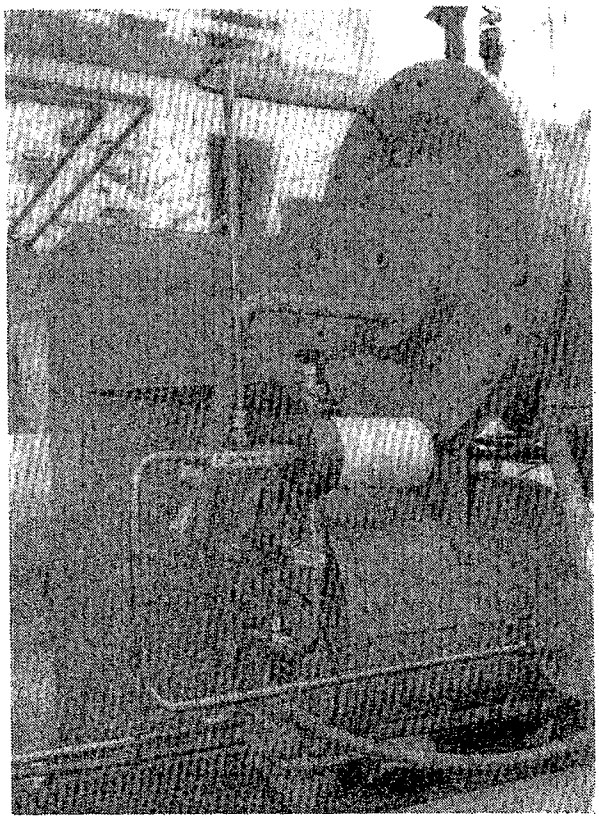

Figure 4 - Modified Oil Filter Top Assembly. Refrigeration Valve on Top.

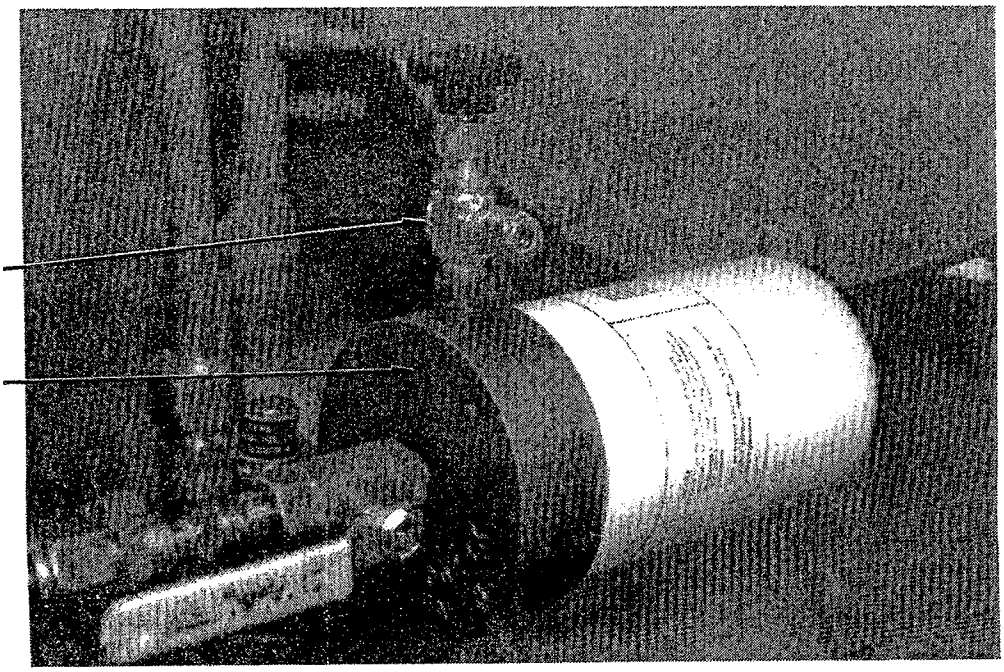

Figure 5 - Three-Way Valve Installed Between Oil Regulator and Oil Filter. Tee Installed Between Oil Regulator Relief Line and Three-Way Valve.

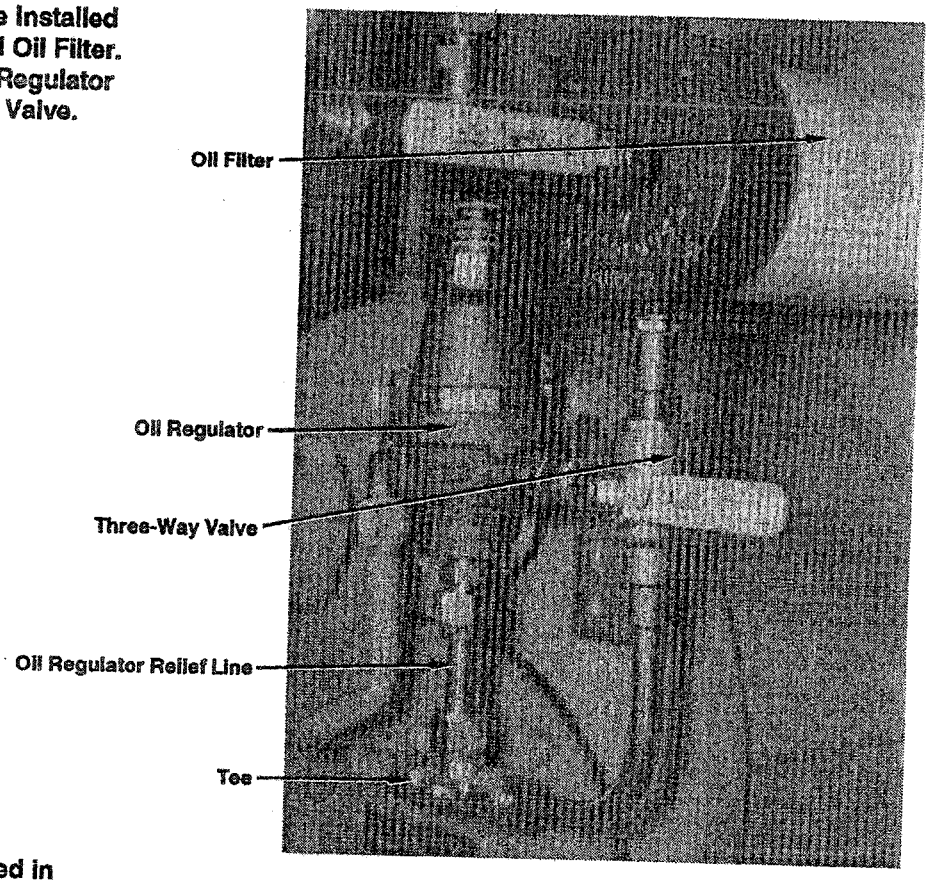

Figure 6 - Hand Valve Installed in Supply Oil Line.

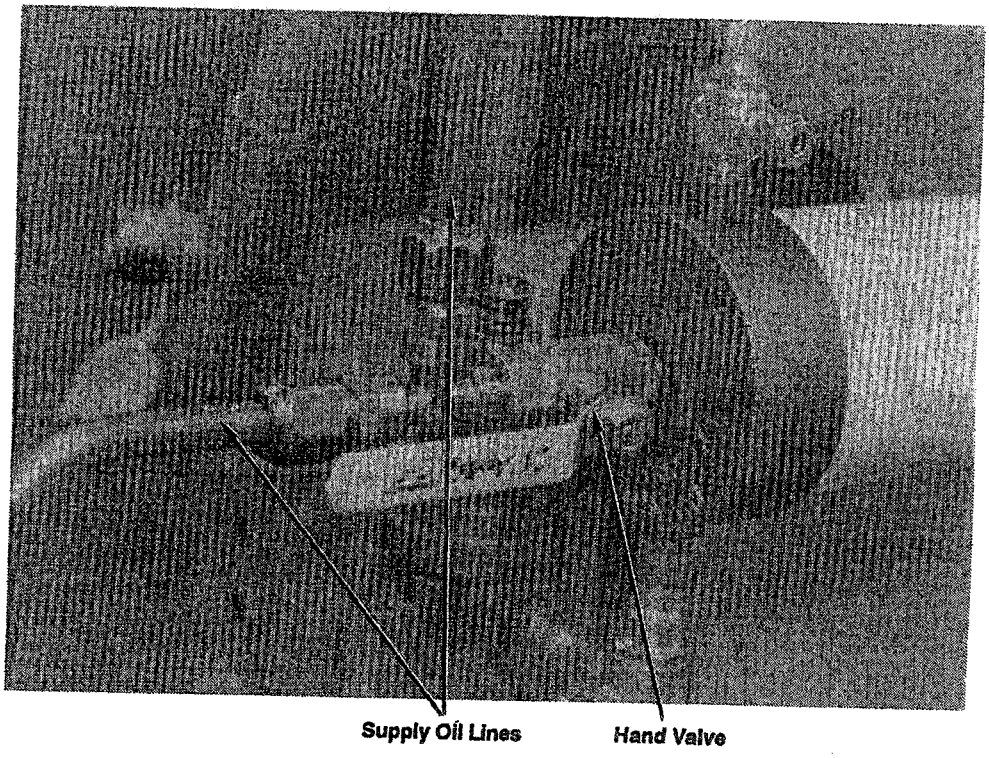

Figure 7 - Overall View of Modification

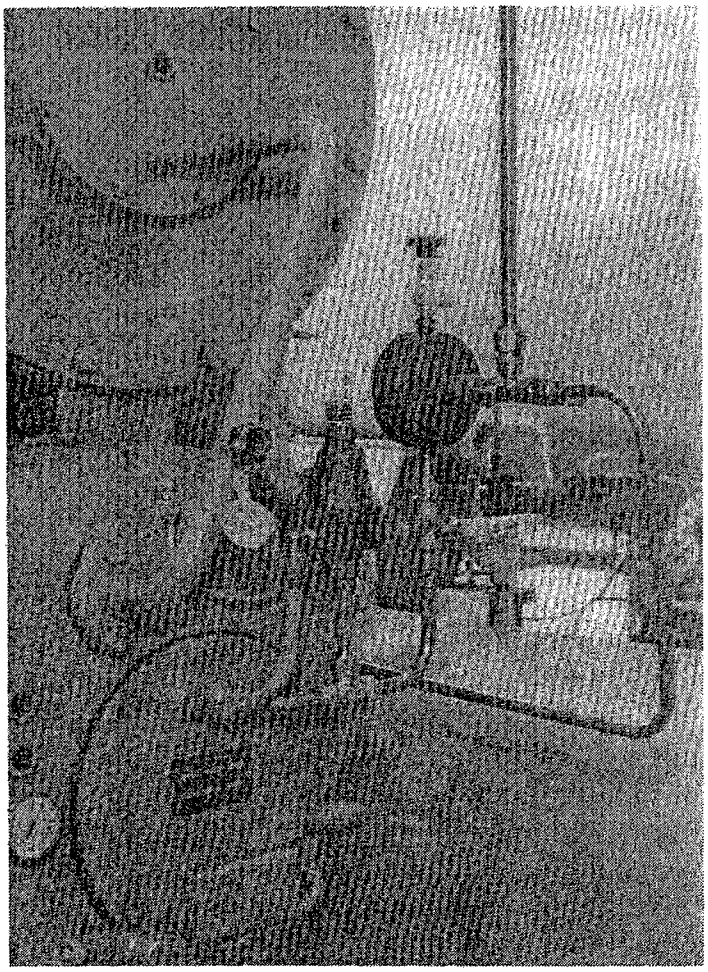

Oil Sampling Technique:

To ensure an accurate and useful oil analysis, follow these guidelines.

It is strongly recommended that only approved sample bottles be used for oil analysis. Special pre-labeled sample bottles are available from Trane/Service First upon request. The oil sample bottle used must be clean, dry, and free of any contamination.

A minimum of 4 fluid ounces of oil is required for analysis.

Make sure the centrifugal unit has been operating for 30 minutes or more. This will ensure the oil is well circulated.

With centrifugal unit operating, collect oil circulated to the bearing through the lubrication system. The recommended sample location is the 3/8" refrigeration angle valve (Valve C) on the oil filter top assembly. See Figure 1.

Do not collect oil samples from the charging valve on the oil tank.

Send oil samples in for analysis as soon as possible. Do not store oil samples; since moisture may infiltrate the sample container and distort analysis results.

Oil Filter Change:

These instructions are for changing a screw-on type oil filter in the horizontal configuration. Other filter arrangements will require different methods for change out. Whatever method is used, it is very important to minimize the loss of oil and the release of refrigerant vapor.

1. Turn compressor and oil pump motor off.

2. Turn three-way valve handle (Valve B) to a 45 degree position from the normal operating position.

Note: During normal operation the handle of 3-way valve should be in the horizontal position,or in a position to allow oil flow from the oil regulator into the oil filter.

3. Close 3/8" ball valve (Valve A).

Note: With the three-way valve handle set to a 45 degree position and the 3/8" ball valve closed, the oil filter will drain into the sump. Allow the oil filter to drain for a minimum of 30 minutes.

4. Open the 3/8" refrigeration angle valve (Valve C). Quickly rotate the three-way valve handle (Valve B) to a 90 degree position from the normal operating position. This isolates the oil filter and diverts oil flow from the oil regulator back to the oil sump.

5. Close 3/8" refrigeration angle valve (Valve C).

6. Remove and replace oil filter.

Note: Dispose of used oil filter per applicable federal, state and local regulations. Refer to CFC-Guide-2.

7. Open 3/8" ball valve (Valve A) and return three-way valve handle (Valve B) to 0 degrees (handle in the horizontal position or in a position to allow oil flow from oil regulator into oil filter.).

8. Restart centrifugal unit.

Chiller Service History

Background information about the chiller also impacts the oil analysis program. The attached "Refrigeration Oil Sample Identification" form (which must accompany any oil sample sent to Trane/Service First for analysis) is essentially a questionnaire that requests specific, pertinent facts about the chiller's operating characteristics, maintenance history and past repairs. It also asks specific questions about the accompanying oil sample: why it was taken, where it was drawn from the chiller, the brand of oil used, how much oil was added since the last oil change; etc. Especially critical for an accurate oil analysis are: (1) the date of the last oil change, (2) chiller operating time (hours and months) since the last oil change, and (3) the number of starts since the last oil change. (These questions are printed in red on the actual form, and are shaded on the example attached.)

To obtain copies of the "Refrigeration Oil Sample Identification" form, contact Trane/Service First; at 4500 Morris Field Drive, Charlotte, North Carolina 28208.

Recommended Oils

The physical and chemical properties of lubricating oils are important to the life and reliability of mechanical equipment. In refrigeration systems, these properties are uniquely important because the lubricating oil is exposed to the refrigerant used in the system.

Specific properties that determine an oil's suitability for use in a refrigeration system are its lubricity, chemical stability, solubility, aniline point, and absence of contaminants -- particularly moisture. Chemical stability affects the rate at which an oil discolors and forms acids in the presence of refrigerant, air, moisture and heat. Solubility affects the amount of refrigerant that can be absorbed into the oil; an elevated concentration of refrigerant in the oil can cause excessive foaming during equipment start-up. Aniline point is another important chemical characteristic because it indicates the effect of the oil on o-rings.

Tests of commercially available refrigeration oils have revealed unacceptably wide variations in product properties--primarily stability, solubility and contamination. In at least one case, it appears that an oil sold under a particular brand name and number was actually refined by several different vendors, each providing a product with substantially different characteristics. Contamination--especially by moisture--was prevalent in these tests, particularly in instances where the oil was repackaged (evidently using improper procedures), or allowed to stand in 55-gallon drums.

Also, because manufacturer specifications for commercial oils are often so generalized or incomplete, an oil's suitability for use in refrigeration systems cannot be verified.

For these reasons, Trane has discontinued its earlier brand name approvals for oils to be used in its CenTraVac compressors, and recommends that Trane-name oils be obtained from its parts distributors. Trane brand oils are purchased and tested to assure compliance with Trane's specifications, and are carefully repackaged in convenient containers using proper procedures.

Table 1
Recommended Oil Charge Quantities and Oil Codes

CenTraVac Chiller Model	Unit Oil Charge	Oil Code
CTV (old style)	11.0 gallons	OIL-22
CV6A thru 8C	7.0 gallons	OIL-22
CV9A thru 12F	10.0 gallons	OIL-22
CVHA	7.0 gallons	OIL-22
CVHB 060 thru 080	7.0 gallons	OIL-22
CVHB 095 thru 155	10.0 gallons	OIL-22
CVHD	13.0 gallons	OIL-22
CVHC	55.0 gallons	Mobil DTE Light (1)
LOCV	55.0 gallons	Mobil DTE Light (1)
OCV	10.0 gallons	OIL-22
PCV	7.0 gallons	OIL-22
CVHE	7.0 gallons	OIL-22
CVHF	7.0 gallons	OIL-22

Note:
(1) Mobil DTE light is the only oil acceptable for use in the large, Trane LOCV and CVHC CenTraVacs.
(2) Trane Oil-22 is also acceptable for use in the crankcase of Trane belt-driven purge compressors.

Additives

The Trane Company does not recommend the use of commercially available oil additives which are advertised to increase oil lubricity and /or improve heat transfer efficiency when added to the system. The possible effects that such oil additives may have on oil breakdown, acid formation and their long-term impact on elastomers and motor insulation materials has not been substantiated by laboratory tests or field-usage history. Normal product design life and efficiency can be assured only by using Trane-recommended products and by following all recommended maintenance procedures. Liability for any detrimental effects that the use of non-approved products may have on equipment performance or longevity must be assumed by the equipment owner, equipment servicer or the oil additive manufacturer.

With Trane oil, the user is assured of an uncontaminated oil that possesses the characteristics necessary for the intended application.

Note: The only oil recommended for use in all Trane CenTraVac chillers (excluding Models CVHC and LOCV) is Trane OIL-22; see Table 1

Summary

To assure accurate, useful oil analysis results:

1. Always obtain the sample from the oil supply line while the machine is running and take it from this same location every time the oil is sampled!

2. Fill out the "Refrigeration Oil Sample Identification" form completely! Do not omit any of the requested information on the assumption that Trane/Service First already has the necessary data. Insufficient data can lead to the misinterpretation of analysis results!

3. Use clean sample bottles. (Trane/Service First will supply these on request.)

4. Send in the sample immediately after taking it from the machine.

Note: A form (order no 1-27.85) explaining the importance of an oil analysis program is available from The Trane Company, and can be attached to the chiller for operator reference.

TRANE™

REFRIGERATION OIL SAMPLE IDENTIFICATION

(Attach to each sample for shipment)

Ship samples in any clean, dry, well sealed unbreakable plastic bottles (supplied upon request). A minimum of four fluid ounces of oil is required for analysis. Obtain samples while the machine is running. Flush all pipes, tubes, valves, etc., **before collecting** a sample. **Collect only the oil which is being circulated in the lubrication system. Avoid oil from dead spots and non-flowing areas.** We suggest installation of a permanent sampling valve.

Identification

The following information is requested for purposes of proper sample identification and analysis, and to allow meaningful interpretation of analytical results:

Job Name _____ Purchase Order No. _____

Location _____

Unit Model No. _____ Unit Serial No. _____

Compressor Model No. _____ Size _____ (tons) Compressor Serial No. _____

Type of Compressor: centrifugal _____ reciprocating _____ screw _____ hermetic _____ open _____

gear drive _____ direct drive _____ electric motor _____ steam turbine _____ other power _____

Compressor Manufacturer _____

What is the cooling application: air conditioning _____ process cooling _____ low temp _____

Sample

Indicate the lubrication system where oil sample was taken:

Compressor _____ gear box _____ other _____

Brand of oil _____ Date of last oil change: month _____ year _____

Operating time since last oil change _____ (hrs) (months) No. of starts _____

Oil added since last change _____ (qts.) Brand added _____ Oil sump capacity _____ (gals.)

Indicate refrigerant type: R-11 _____ R-113 _____ R-12 _____ R-22 _____ other _____

Condenser: air cooled _____ water cooled _____ other _____

Reasons

Indicate reason for obtaining chemical analysis: routine maintenance _____ other reason (give details) _____

_____

_____

_____

Has this unit been analyzed previously? _____ If yes, by whom? _____ Date _____ Lab No. _____

Service History

Please provide information and dates on the service history of the machine.

Motor burnout and replacement: _____ approx. date _____

Replacement of worn or failed bearing: _____ approx. date _____

Tubing failure – water entering machine: _____ approx. date _____

Excessive purging problems: _____

Other _____

_____

_____

How long has this machine been in service? _____ (years.) Start up date: _____

Sample was taken by: Name _____ Date _____

Outside Contractor _____

Service Company _____ Phone _____

Address _____ City _____ State _____ Zip _____

Ship samples to (UPS preferred)

Trane/ServiceFirst
4500 Morris Field Drive
Charlotte, NC 28208

014CA 1/86 200/100

For further information on this product or other Trane products, refer to the "Trane Service Literature Catalog", ordering number IDX-IOM-1. This catalog contains listings and prices for all service literature sold by Trane. The catalog may be ordered by sending a $20.00 check to: The Trane Company, Service Literature Sales, 3600 Pammel Creek Road, La Crosse, WI 54601.

Printed by INLAND GRAPHIC SERVICES, La Crosse WI

PW
CTV-SB-19D

TRANE® AIR CONDITIONING

FILE INFORMATION:

DIVISION TAB-TRANE REFRIGERATION PRODUCTS
PRODUCT TAB-LIQUID CHILLERS-CENTRIFUGAL
CenTraVac
MODEL TAB-CTV
LITERATURE ITEM-SERVICE BULLETIN

LITERATURE FILE NO.

CTV-SB-22B

GENERAL SERVICE BULLETIN

Since the Trane Company has a policy of continuous product improvement, it reserves the right to change specifications and design without notice. The installation and servicing of the equipment referred to in this booklet should be done by qualified, experienced technicians.

2/25/83
SUPERSEDES CTV-SB-22A
DATED 10/5/81

SUBJECT: CENTRAVAC SOLID STATE MOTOR PROTECTION MODULE - OPERATION, CALIBRATION AND TROUBLESHOOTING

INTRODUCTION:

The purpose of this Service Bulletin is to discuss the operating characteristics of the Trane Motor Protection Module (MPM) and to outline the correct procedures for calibration and troubleshooting. The module is presently supplied on all Air Cooled CenTraVacs and Water Cooled CenTraVacs equipped with the new Trane Unit-Mounted Starter. In addition, it is also part of the new Motor Starter Protection System (MSPS) Retrofit Kit marketed by Service Products. This Bulletin also discusses the operation, calibration and troubleshooting procedure for the Motor Starter Protection System Retrofit Kit.

DISCUSSION:

Motor Protection Module (MPM) Features:

Listed below are the operational functions and features of the Motor Protection Module:

1. To provide precise compressor motor overload protection.
2. To protect against excessive locked rotor (in-rush) current draw.
3. To limit the length of time that in-rush current may be drawn.
4. To protect the unit from damage which can be caused by an electrical distribution fault.
   NOTE: A distribution fault is defined as a complete loss of line voltage for a period of less than 60 cycles.
5. The module initiates starter transition when the compressor reaches full speed.
6. To provide a DC voltage signal which is proportional to load.
7. It can be adjusted to compensate for high line voltage.
8. It is adjustable for 50 or 60 Hertz operation.

© THE TRANE COMPANY 1983
COMMERCIAL AIR CONDITIONING DIVISION
LA CROSSE, WISCONSIN 54601
PRINTED IN U.S.A.

Motor - Starter Protection System (MSPS) Features:

The Motor Starter Protection System Retrofit Kit consists of three modules. One is the Motor Protection Module previously discussed, another houses the fault indicator circuit breakers and the third contains the Starter Protection System. The features and functions of the starter protection system are listed below:

1. To protect against the effects of pilot relay contact welding.
2. To protect against the effects of the loose control wiring.
3. To protect against the effects of intermittent control voltage (ie., fluttering flow switches, etc.)
4. It incorporates an adjustable undervoltage lock out for the control circuit.
5. The circuits are wired to protect the transition Resistor against excessive operating time.

CALIBRATION PROCEDURES (MOTOR PROTECTION MODULE)

CAUTION: WHENEVER WORKING ON THE MPM, AS WITH ANY ELECTRICAL EQUIPMENT, STOP THE MOTOR AND DISCONNECT ALL POWER TO THE UNIT. FAILURE TO DO SO MAY RESULT IN ACCIDENTAL SHOCK OR DEATH BY ELECTROCUTION. PREVENT PERSONAL INJURY BY ALWAYS DISCONNECTING ELECTRICAL POWER BEFORE WORKING ON ELECTRICAL EQUIPMENT.

NOTE: On units equipped with the Distribution Fault function, a small circuit board mounted in the center of the MPM must be tilted outward to perform MPM calibration. This is done by gently pulling on the two black tabs, located on the top of the circuit board, and tilting it down on its hinges.

I. Line Frequency Adjustment:

The MPM can operate on either 50 or 60 Hertz electrical systems. The line frequency is set as follows:

A. The installation line frequency must first be determined. (60 Hertz for all U.S. installations.)
B. The frequency switch (see Figure 1) should then be set to the position which corresponds to the installation frequency (see Figure 2).
C. Write in the setting made on the MPM nameplate (see Figure 3).

II. Compressor Motor Overload Setup:

The overload is set by adjusting the resistance of the current calibrator. The MPM is designed so that with the current calibrator correctly set, the overload will trip at 107% of the motor rated load current. The use of a 107% trip point prevents nuisance full load trip outs while still protecting the compressor motor from potentially damaging overloads.

The correct procedure for setting the current calibrator is as follows:

A. Determine the Rated Load Current (RLA) and the current transformer ratio for the unit. Where the actual jobsite voltage is equal to or lower than the specified voltage rating shown on the unit nameplate, the current calibrator setting can be established based on the nameplate RLA.

When the actual voltage is higher than the specified voltage, see Section V (High Voltage Compensation).

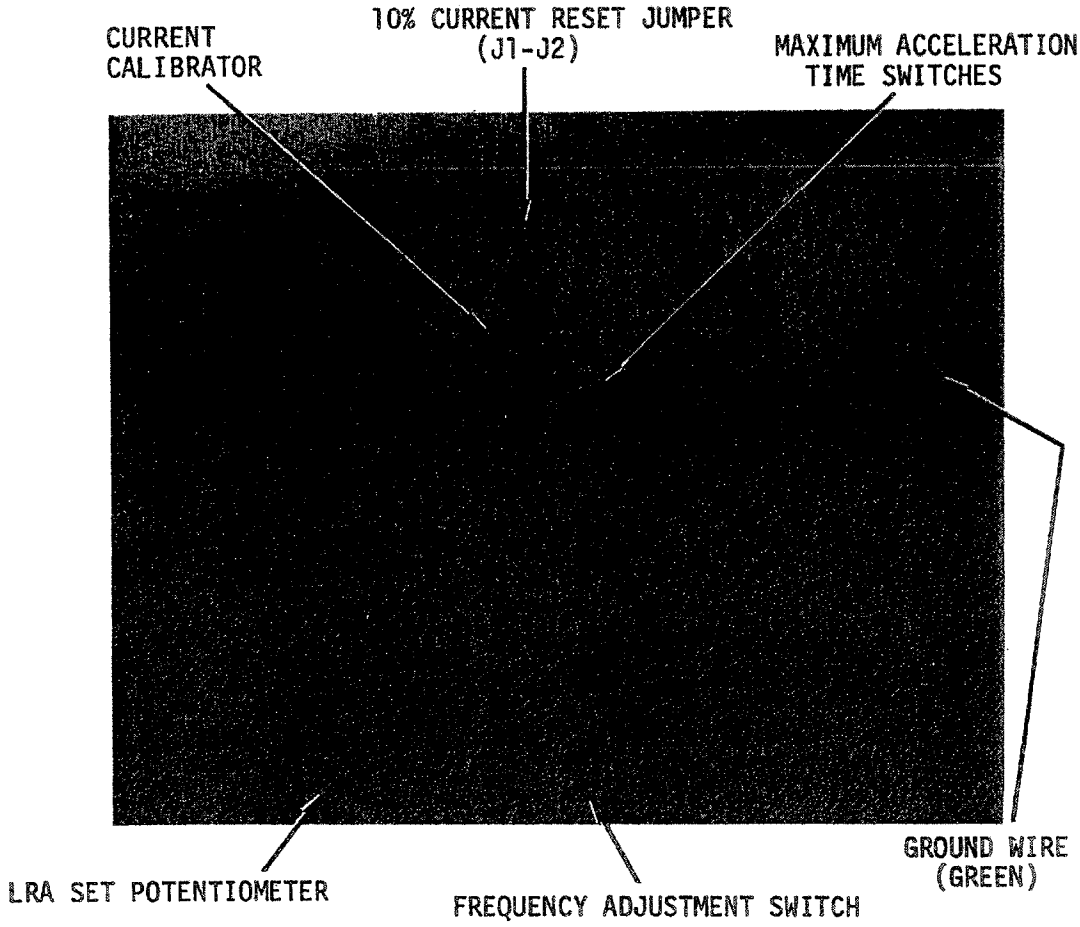

FIGURE 1 - MOTOR PROTECTION MODULE

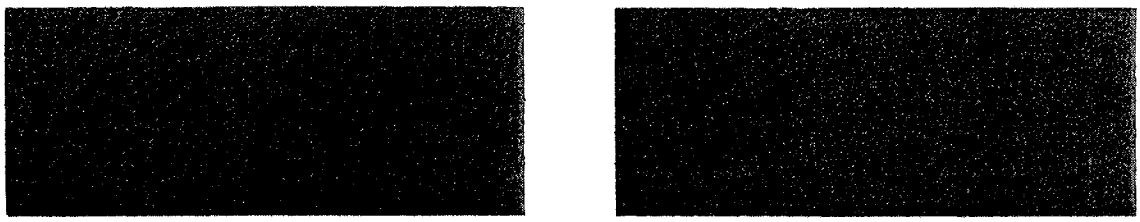

50 Hz POSITION

60 Hz POSITION

FIGURE 2 - LINE FREQUENCY ADJUSTMENT SWITCH

TRANE NO.	
CALIBRATOR NO.	
CALIBRATOR OHMS	C.T. RATIO /5
MOTOR LRA _____ / MOTOR RLA _____	RATIO ____ %
L.R. TRIP TIME SEC.	50☐ 60☐ HZ

FIGURE 3 - MOTOR PROTECTION MODULE NAMEPLATE

If the unit is equipped with power factor correction capacitors which are connected on the load side of the overload current transformers, the RLA shown on the unit nameplate will have to be recalculated for the purpose of setting the overloads. On CenTraVacs shipped with factory installed power factor capacitors, the adjusted RLA should be shown on the electronic overload cover and the overload set accordingly. To determine the adjusted RLA on other units, the machine should be run to full load and amperage readings taken on the load and line sides of the capacitor terminal points. The nameplate RLA should be multiplied by the ratio of the current on the line side of the capacitors to current on the load side of the capacitors. This gives the adjusted RLA to be used to set the current calibrator. (See equation and example below.)

$$\text{Adjusted RLA} = \text{Nameplate RLA} \times \frac{\text{line side current}}{\text{load side current}}$$

Example: Motor Rating (RLA) = 100 amps
Current on line side of capacitors = 84 amps
Current on load side of capacitors = 92 amps

$$\text{Adjusted RLA} = 100 \text{ amps} \times \frac{84 \text{ amps}}{92 \text{ amps}} = 91 \text{ amps}$$

If the power factor capacitors are connected on the line side of the MPM current transformers or if the capacitor leads are run through the current transformers with the motor leads (Figure 4) the RLA must not be adjusted.

The motor nameplate RLA should be used to set the current calibrator in this case.

Refer to Engineering Bulletin EB-CTV-44 for additional information and recommendations concerning field addition of power factor correction capacitors.

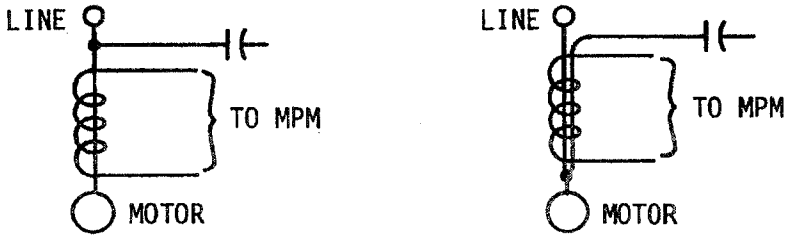

FIGURE 4 - Current Transformers

B. Once the correct RLA has been determined, the rated load secondary current (I_{sec}) from the current transformer can be determined. The value of I_{sec} at full load is dependent upon the location of the current transformers. The correct methods to determine I_{sec} are discussed below:

1. Current Transformer Monitoring Line Current
   If the current transformers are located to monitor line current, the value of the I_{sec} is determined by dividing the current transformer ratio into the RLA. (See the equation and example below.)

$$I_{sec} = RLA \div (CT\ ratio)$$

Example RLA = 91 amps

$$CT\ ratio = \frac{100}{5}$$

$$I_{sec} = \left(91 \div \frac{100}{5}\right)$$

$$I_{sec} = 4.55$$

2. Current Transformers Monitoring Phase Current
   If the current transformers are located in a star-delta starter in such a way that they monitor phase current, the value of I_{sec} is determined by dividing the current transformer ratio into the RLA and multipling this quantity by 0.58. (See the equation and example below.)

$$I_{sec} = RLA \div CT\ Ratio) \times 0.58$$

Example: RLA = 91 amps

$$CT\ Ratio = \frac{100}{5}$$

$$I_{sec} = (91 \div \frac{100}{5} \times 0.58$$

$$I_{sec} = 2.64$$

NOTE: When donut-type current transformers are used, the wires passed through them are sometimes wrapped around and passed through more than once. When this is done, the CT ratio is effectively divided by the number of times the wire passes through the CT. This means a 200/5 CT with the wire passed through it twice should be treated as a 100/5 CT.

C. With the I_{sec} value found above, use Table 1 to determine the correct current calibrator and its setting. For the above example in which the line current is being monitored (I_{sec} = 4.55), the correct current calibrator would be H818. The correct calibrator setting would be 82.6 ohms. With the calibrator setting adjusted in this manner, the overload trip point would be 107% of the nameplate RLA.

D. To set the current calibrator, it must be removed from the module. Using a digital ohmmeter (3-1/2 digit accuracy minimum) set the resistance of the calibrator to the value taken from Table 1.

E. Replace the current calibrator in the module. Write the calibrator number and setting on the MPM nameplate.

NOTE: With the current calibrator set correctly and the unit operating at full load, a DC voltage of approximately 8.25 VDC should exist across terminals V1-V2 in the MPM.

TABLE 1 - CURRENT CALIBRATOR TABLE

I^2 SEC AMPERE RATING		NUMBER ON CURRENT CALIBRATOR	POTENTIOMETER ADJUSTMENT RESISTANCE (OHMS)	I^2 SEC AMPERE RATING		NUMBER ON CURRENT CALIBRATOR	POTENTIOMETER ADJUSTMENT RESISTANCE (OHMS)
MIN.	MAX.			MIN.	MAX.		
2.01	2.05	H816	185	3.51	3.55	H817	106
2.06	2.10	H816	180	3.56	3.60	H817	105
2.11	2.15	H816	176	3.61	3.65	H817	103
2.16	2.20	H816	172	3.66	3.70	H818	102
2.21	2.25	H816	168	3.71	3.75	H818	101
2.26	2.30	H816	165	3.76	3.80	H818	99.2
2.31	2.35	H816	161	3.81	3.85	H818	97.9
2.36	2.40	H816	158	3.86	3.90	H818	96.6
2.41	2.45	H816	155	3.91	3.95	H818	95.4
2.46	2.50	H816	151	3.96	4.00	H818	94.2
2.51	2.55	H817	148	4.01	4.05	H818	93.0
2.56	2.60	H817	146	4.06	4.10	H818	91.8
2.61	2.65	H817	143	4.11	4.15	H818	90.7
2.66	2.70	H817	140	4.16	4.20	H818	89.6
2.71	2.75	H817	138	4.21	4.25	H818	88.5
2.76	2.80	H817	135	4.26	4.30	H818	87.5
2.81	2.85	H817	133	4.31	4.35	H818	86.5
2.86	2.90	H817	130	4.36	4.40	H818	85.5
2.91	2.95	H817	128	4.41	4.45	H818	84.5
2.96	3.00	H817	126	4.46	4.50	H818	83.5
3.01	3.05	H817	124	4.51	4.55	H818	82.6
3.06	3.10	H817	122	4.56	4.60	H818	81.7
3.11	3.15	H817	120	4.61	4.65	H818	80.8
3.16	3.20	H817	118	4.66	4.70	H818	79.9
3.21	3.25	H817	116	4.71	4.75	H818	79.1
3.26	3.30	H817	114	4.76	4.80	H818	78.2
3.31	3.35	H817	113	4.81	4.85	H818	77.4
3.36	3.40	H817	111	4.86	4.90	H818	76.6
3.41	3.45	H817	109	4.91	4.95	H818	75.8
3.46	3.50	H817	108	4.96	5.00	H818	75.1

III. Locked Rotor Current Lockout Adjustment

The MPM protects the compressor motor from excessive LRA current draw during start-up. It does this by tripping the motor overload circuit breaker any time the set LRA is exceeded. The correct procedure for setting the LRA trip point is as follows:

A. The LRA current trip point setting is dependent upon the type of starter being used with the CenTraVac compressor motor.

B. The LRA current trip point is set using the LRA set potentiometer (Figure 1).

C. The correct setting position for the LRA set potentiometer as applied to different types of starters are shown in Figure 5.

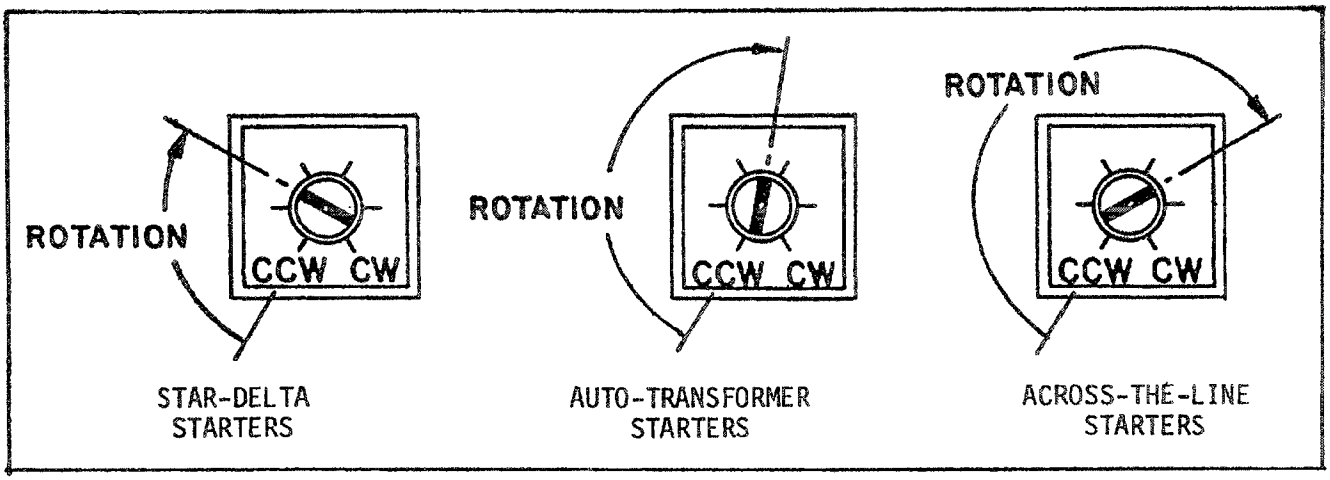

FIGURE 5 - LRA SET POTENTIOMETER POSITIONS FOR DIFFERENT TYPE STARTERS

D. To set the LRA set potentiometer, insert a screw driver in the adjusting slot and turn potentiometer to the fully counter-clockwise (CCW) stop. This establishes a reference position. From this point, the potentiometer should be rotated clockwise to the position, shown in Figure 5, which corresponds to the compressor motor starter being used.

E. As can be seen by the calibration markings on the LRA set potentiometer, this is a rough setting only. If it is found that the "motor overload" circuit breaker trips immediately (1 sec) upon energization of the starter, the LRA current trip point may have to be set higher. Doing this will not harm the operation of the MPM or the compressor motor.

F. Write the nameplate LRA and the nameplate RLA on the MPM nameplate. See Figure 3.

G. Calculate the "RATIO ___%" using the formula below. Write this on the nameplate. See Figure 3.

$$\text{Ratio \%} = \frac{\text{Motor LRA*}}{\text{Motor RLA}} \times 100\%$$

Example: Motor RLA - 100 AMPS

Motor LRA = 200 AMPS

$$\frac{200 \text{ AMPS}}{100 \text{ AMPS}} \times 100\% = \text{Ratio } 200\%$$

* Locked rotor amperes (LRA) is the reduced value obtained depending on the method of starting. See Table 2.

TABLE 2 STARTING CHARACTERISTICS FOR VARIOUS TYPES OF MOTOR STARTERS

TYPE OF STARTER	% TAP	STARTING CHARACTERISTICS - % OF RATED VALUE		
		MOTOR VOLTAGE	MOTOR LRA CURRENT	MOTOR TORQUE
Full Voltage Type Magnetic - X - Line	n/a	100	100	100
Reduced Voltage Types				
Auto-Transformer	80	80	64	64
	65	65	42	42
	50	50	25	25
Primary Reactor	80	80	80	64
	65	65	65	42
	50	50	50	25
Reduced - Inrush Types				
Star-Delta	n/a	100	33	33
Open or Closed Transition	n/a	100	33	33

IV. Maximum Acceleration Time Set

The MPM limits the maximum acceleration time the motor can undergo by tripping the "Motor Overload" circuit breaker, locking the machine off whenever the machine does not transition in the time period set on the acceleration time adjustment (Figure 1). This prevents the motor from drawing LRA for an excessive period of time and overheating the motor. The maximum acceleration time is set as follows:

A. Determine the desired maximum acceleration time (between 1 and 63 seconds) for the unit. Table 3 gives recommended settings for typical units. This setting may vary, depending on the type of unit, type of starter and jobsite conditions. It should be set, based on the typical acceleration time for the particular unit and jobsite conditions.

TABLE 3 - TYPICAL MAXIMUM ACCELERATION TIME SETTINGS

STARTER TYPE	RECOMMENDED MAXIMUM ACCELERATION TIME SETTINGS
Star-Delta	12 Seconds
Auto-Transformer	8 Seconds
Across-The-Line	4 Seconds

B. Once the desired value is known, the combination of switches on the LRA time adjustment which adds to this value should be switched to the "ON" position (see Figure 6).

NOTE: If none of the switches are in the "ON" position, the unit will not start. The MPM allows no acceleration time in this situation and the "Motor Overload" circuit breaker will trip immediately upon attempted start-up.

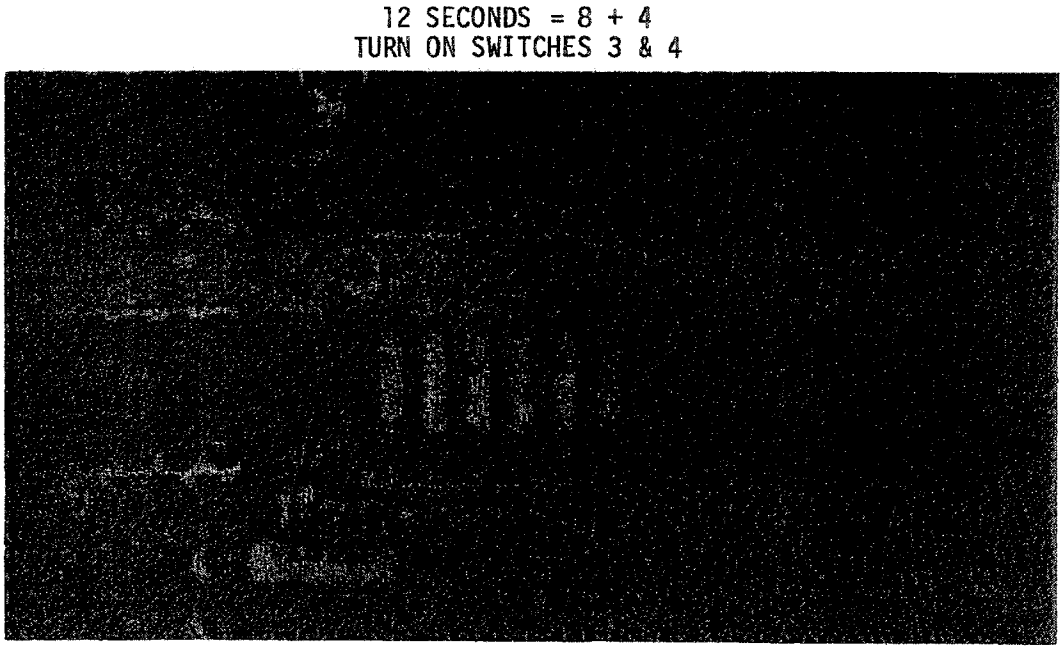

FIGURE 6 - MAXIMUM ACCELERATION TIME SWITCH

C. Write the LRA time adjustment setting on the MPM nameplate. See Figure 3.

V. High Voltage Compensation:

The RLA shown on the unit nameplate is based on original design conditions and the nominal voltage ordered. The actual jobsite voltage quite often varies from the nominal. Higher than nominal line voltage permits the motor to produce higher than rated horsepower without motor current draw in excess of nameplate. To prevent overloading of the motor due to higher than rated voltage, the MPM should be recalibrated. This can be done in either of two ways:

A. By removal of 10% current reset jumper from terminals J1 - J2 in the MPM (see Figure 1), the module is automatically recalibrated so that approximately 90% of the motor nameplate current rating is the new "rated" current for the application. The MPM should be setup normally, as removal of the jumper recalibrates all functions of the MPM.

B. The MPM can also be recalibrated to compensate for high voltage by resetting the current calibrator. The proper value is determined by multiplying the I_{sec} value, determined in the Compressor Motor Overload Setup section of this Service Bulletin, by the ratio of the rated voltage to the actual line voltage. (see the equation and example below.)

$$\text{New } I_{sec} = I_{sec} \times \frac{\text{rated voltage}}{\text{actual line voltage}}$$

Example: Original I_{sec} = 4.55
Rated Voltage = 460 volts
Actual line voltage = 485 volts

$$\text{New } I_{sec} = 4.55 \times \frac{460 \text{ volts}}{485 \text{ volts}} = 4.32$$

The new I_{sec} value is then used to enter Table 1 and determine a new current calibrator setting. The calibrator should be reset to this value. This will recalibrate all other MPM functions, compensating for the high voltage condition.

C. Whenever the MPM is recalibrated for high voltage, the LRA Potentiometer should be turned up one space higher than indicated on Figure 4 to prevent nuisance tripouts at start-up. The reason for this is that higher than nameplate LRA current draw would occur. This must be compensated for by turning up the LRA Potentiometer.

Any calibration of the module, such as removal of the J1 - J2 jumper or recalibration of the current calibrator should be noted on the MPM module cover along with the reason for recalibration.

NOTE: When any recalibration of the motor overload is performed on a water-cooled CenTraVac equipped with a pneumatic LLR, the LLR must be recalibrated just as the overload. If this is not done, nuisance overload tripouts will occur.

VI. CVAC Load Limiting Control Calibration

On CVAC's, the MPM controls the load limiting of the motor through a load proportional DC voltage which it sends to the vane control module. If the MPM has been calibrated correctly, the vane control module should start load limiting at 98% of RLA. The load proportional DC voltage can be measured across terminals V1 - V2 of the MPM. At rated load, this voltage will be -8.25 VDC. This voltage varies linearly with the machine running amperage.

Example: 100% RLA = (-)8.25 VDC
98% RLA = (-)8.25 x .98 = (-)8.09 VDC

VII. Vane Control Module Load Limit Calibration

A. The current calibrator must be correctly set before the control module load limiting can be calibrated.

B. The unit should then be started.

C. The voltage across terminals V1 - V2, in the control module, should be measured while the machine is being loaded. The control module current limiting calibrator should be set so the machine begins load limiting when the V1-V2 voltage reaches (-)8.09 volts DC. This corresponds to a machine load of 98% of FLA.

D. Manually unload and load the machine, rechecking to make sure load limiting begins at a V1-V2 signal voltage of (-)8.09 volts DC. The unload - load lights can be used to verify proper limiting as well as visually observing the damper motor.

E. The load limiting of the control module is now set correctly.

VIII. Dry Running Starters Equipped with the Motor Protection Module

Starters equipped with the Motor Protection Module can be dry run at startup in the same manner as starters not so equipped. There are two differences which should be noted.

A. Before the starter can be dry run, the Distribution Fault circuit Breaker must be disconnected. This can be done by simply removing a wire from the Distribution Fault Circuit Breaker. If this is not done, the starter will not sequence, but will lockout on distribution fault instantly upon initiation of the start.

This occurs because the distribution fault trip is initiated when the motor current drops below 20% of RLA with the M1 contactor energized. See the "Distribution Fault Trip Operation" section of this Bulletin for the reasoning behind this. The only time the above circumstances can occur, is during an actual distribution fault or a starter dry run.

B. The other difference which will be noticed, is that immediately upon energization of the dry run, the starter will go through transition.

This happens because the MPM initiates transition on the basis of motor current draw. During a normal startup, the vanes are closed which allows the motor current to drop from LRA to a value below RLA. When the motor current drops from LRA to 80% of RLA during start, the MPM initiates transition. During a dry run, there is no current draw, so the MPM, immediately (1 sec) initiates transition.

IX. Distribution Fault Circuit Breaker Operation

A distribution fault is defined as a loss of line voltage for less than 60 electrical cycles. This type of short duration power interruption can be damaging to many types of induction motor driven equipment.

The damage occurs because an induction motor acts as a generator for several seconds after power is disconnected. The voltage generated by the motor can hold in control relays and starter contactors when a voltage loss occurs. The period of time the contactors are held in, is approximately 60 electrical cycles or 1 second for a Water Cooled CenTraVac, and 20 cycles or 1/3 second, for an Air Cooled CenTraVac.

If line voltage is re-established during the period of time the contactors are being held in by the motor generated voltage, and the two voltages are out of phase, motor torques may occur which are 6 to 10 times normal running torques. These torques occur as the motor is pulled into phase and may be in either the forward or reverse direction. These high torques cause severe overloading of the impeller hub area, with resultant upsetting of the impeller keyway and in severe cases cracking or destruction of the impellers.

The Motor Protection Module detects a distribution fault by monitoring current draw and the M1 contactor. The tripping of the Distribution Fault Circuit Breaker is initiated based on the fact that, in normal operation, only during the occurrances of an actual distribution fault is it found that the motor current draw is less than 20% of RLA and the M1 contactor is energized at the same time. An induction motor will normally always draw over 20% of RLA, even when completely unloaded; and whenever the M1 contactor is energized, the motor is running. The only exceptions occur during a distribution fault or during a starter dry run.

The distribution fault lockout is initiated when the motor current drops below 20% of RLA with the M1 contactor energized. The motor Protection Module senses this set of conditions to be a voltage loss for the reasons explained in the previous two paragraphs. Tripping of the Distribution Fault Circuit Breaker is completed within 6 electrical cycles (1/10 of a second) of the time when the voltage loss occurs.

It should be noted that this provides a way to check for the proper operation of the distribution fault function of the Motor Protection Module. The Distribution Fault Circuit Breaker should trip instantly if it is left connected during a starter dry run.

CALIBRATION PROCEDURE (MOTOR STARTER PROTECTION RETROFIT KIT ONLY)

I. Low Voltage Lockout Calibration

The Motor-Starter Protection System Retrofit Kit incorporates an adjustment which allows the minimum operating control voltage to be set. If the unit experiences a control voltage below the setting of the low voltage lockout, the Starter Protection Module (SPM) locks the machine out with the "Starter Fault" circuit breaker. The low voltage lockout adjustment is on the outside of the Starter Protection Module. It is a slotted potentiometer type adjustment located on the side of the SPM module. (See Figure 7.) It can be set using the following guides:

A. Turning the low voltage set potentiometer fully counter-clockwise gives a trip point of 80 volts ± 10%.
B. Turning the low voltage set potentiometer fully clockwise gives a trip point of 108 volts ± 10%.
C. The nominal trip voltage can be adjusted to any value between these extremes by adjusting the low voltage set potentiometer. See the following equation:

Amount of potentiometer rotation required
(Desired Voltage - 80) ÷ 28 x 100% = Percent rotation

Example: Desired lockout voltage = 94 volts
(94 - 80) ÷ 28 x 100% = 50%

Turn the potentiometer 50% of the way from fully CCW to fully CW.

NOTE: A good nominal setting is 94 volts, or 50% rotation.

II. Start Circuit Protection

A "Starter Circuit" tripout will occur whenever the control circuit power to the starter is momentarily interrupted. Such interruptions could include a fluttering flow switch, loose wiring or a defective control. There is no calibration which can be performed on this circuit.

III. Transition Circuit Protection

A "Transition Circuit" tripout will occur if the transition resistors remain in the circuit for over one and a half seconds. This protects the resistors from conditions which will cause rapid burnout. There is no calibration which can be performed on this circuit.

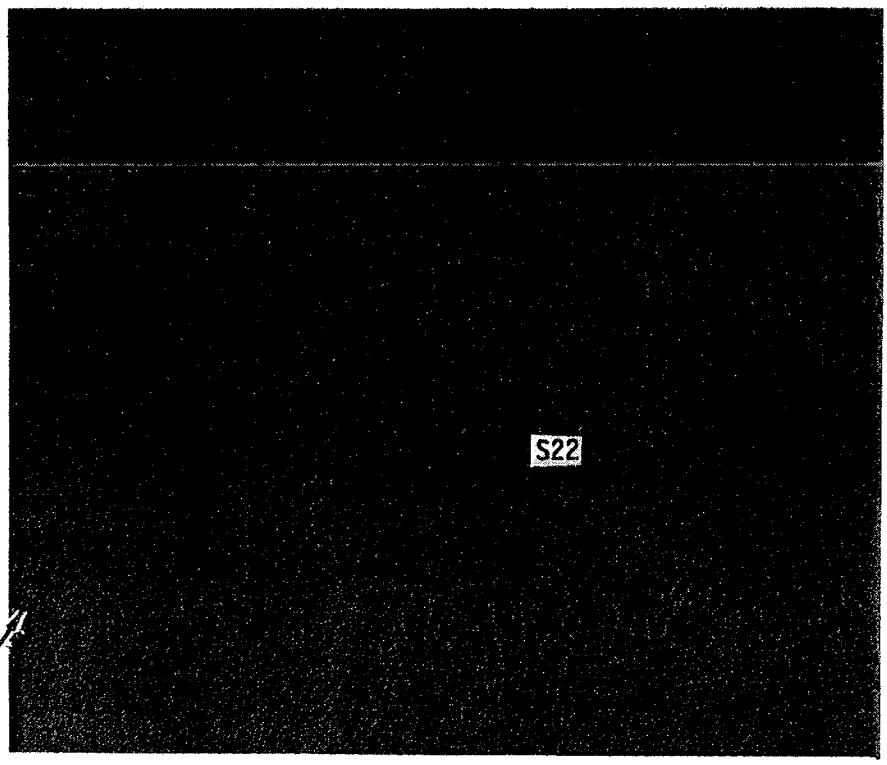

FIGURE 7 - STARTER PROTECTION MODULE

TROUBLESHOOTING MPM/MPS

The wiring diagrams on the following pages give typical wiring schemes for the Motor Protection Module and Motor Starter Protection System Retrofit Kit. Figure 8 shows the wiring of the MPM by description of the terminal board stud's interconnections. Figure 9 is a typical wiring diagram of a Unit Mounted Starter equipped with a MPM. Figure 10 is a typical wiring diagram of the Motor Starter Protection Retrofit Kit.

The charts on the following pages give troubleshooting sequences for the Motor Protection Modules. Problem symptoms are listed across the top of the chart, possible causes in the left hand columns and recommended solutions in the right hand column. The numbers in the columns under the problem symptoms indicate possible causes and solutions for those symptoms. The numbering indicates the probability of the corresponding cause/solution being the one which is causing the problem; 1 being the most likely, 2 the second most likely, and so on.

TROUBLESHOOTING NUISANCE TRIPPING

SYMPTOM/ POSSIBLE CAUSE	MOTOR OVERLOAD TRIPS	DISTRIBUTION FAULT TRIPS	STARTER FAULT TRIPS	TRANSITION FAULT TRIPS	RECOMMENDED ACTION
Incorrect Current Calibrator Adjustment or Installation	3				Determine proper setting, re-calibrate and install.
Incorrect LRA Trip Point Setting	4				Determine proper setting and re-calibrate LRA trip setting.
High Voltage Re-calibration Jumper Removed	7				Determine if jumper should be removed to compensate for high voltage.
Excessive Running Motor Current Draw	1				Check for faulty compressor motor.
Excessive LRA Motor Motor Current Draw	2				Check for faulty compressor motor.
Frequency Selector Switch Incorrectly Set	5				Check selector setting.
Motor Acceleration Time to Long	8				Contact La Crosse Service
Low Voltage To Unit			3**		Contact Power Company
Motor Current Drops Below 20% RLA		5			Contact La Crosse Service
Distribution Fault (complete voltage loss) Occurs For Over 1-1/2 Cycles.		1			Contact Power Company
Current Transformers Incorrectly Wired (dot polority incorrect)	9	2			Rewire Current transformers
Faulty Circuit Breaker - CB11	10				Replace circuit breaker.
1M (K27) Auxiliary Contactor Hanging In		4			Replace contactor.
Flow Switch or Similar Safety Device Fluttering			1**		Check water flows, check for air in system, check for correct instal-lation.
Loose Control Circuit Wiring			2**		Check continuity of circuits to locate-tighten wiring
Low Voltage Trip 1 Misadjusted			4**		Readjust trip to desired value.

(Continued on Page 16)

TROUBLESHOOTING NUISANCE TRIPPING
(continued)

SYMPTOM/ POSSIBLE CAUSE	MOTOR OVERLOAD TRIPS	DISTRIBUTION FAULT TRIPS	STARTER FAULT TRIPS	TRANSITION FAULT TRIPS	RECOMMENDED ACTION
Chattering 2M (K28) Auxiliary or Main Contactor		3			Replace contactor
S-22 Timer Defective			7**		Replace contactor
Defective Circuit Breaker CB-13			8		Replace circuit breaker
Locked Rotor Trip Time Set Incorrectly	6				Consult La Crosse Service for proper setting
Defective Circuit Breaker CB-15				2**	Replace circuit breaker.
Transition Resistor Hanging In (K-26)			9*	1**	Replace contactor
Welded Pilot Relay Contacts (K23-K24)			5		Replace contactor
Defective Pilot Relay Coils (K23-K24)			6		Replace contactor coils
Defective MPM Module	11	6			Replace module

* Air Cooled and Unit Mounted Starters Only
** MSPS Retrofit Kit Only

UNIT WILL NOT FUNCTION

SYMPTOM POSSIBLE/ CAUSE	MOTOR OVER-LOAD WILL NOT TRIP	DISTRIB-UTION FAULT WILL NOT TRIP	STARTER FAULT WILL NOT TRIP	TRANSITION FAULT WILL NOT TRIP	STARTER WILL NOT TRANSITION	INCORRECT V1-V2 CONTROL VOLTAGE	RECOMMENDED ACTION
Verify 120 volts Across X1 and X2	1	1	1	1	1	1	Check Power Supply Wiring
Verify Correct Wiring & Closure on S1-S2 (K-27)	2	2					Check continuity of circuits to locate correct wiring or replace contactor as required.
Incorrect Current Calibrator Adjust-ment or Installa-tion	3	3			2	2	Determine proper set-ting and recalibrate LRA trip setting.
Current Trans-former Incorrectly Wired or Defective	4				3	3	Check continuity of circuits to locate correct wiring.
Faulty Circuit Breaker CB11	5						Replace circuit breaker.
Low Voltage Trip Misadjusted			2				Determine desired setting and re-calibrate low voltage set potentiometer.
Defective Circuit Breaker CB13			5	2*			Replace circuit breaker
Defective Circuit Breaker CB14		4					Replace circuit breaker
Defective Circuit Breaker CB15				3**			Replace circuit breaker
Incorrect Wiring on V1-V2 Terminals						4	Check continuity of circuits to locate-correct wiring.
Auxiliary Contactor on K-26 Defective			4				Check continuity of circuits to locate-replace contactor
Auxiliary Contactor on K-23 and K-24 Defective			3				Check continuity of circuits to locate-replace contactor
Defective MPM Module	6	5					

* Air Cooled and Unit Mounted Starters Only
** MSPS Retrofit Kit Only

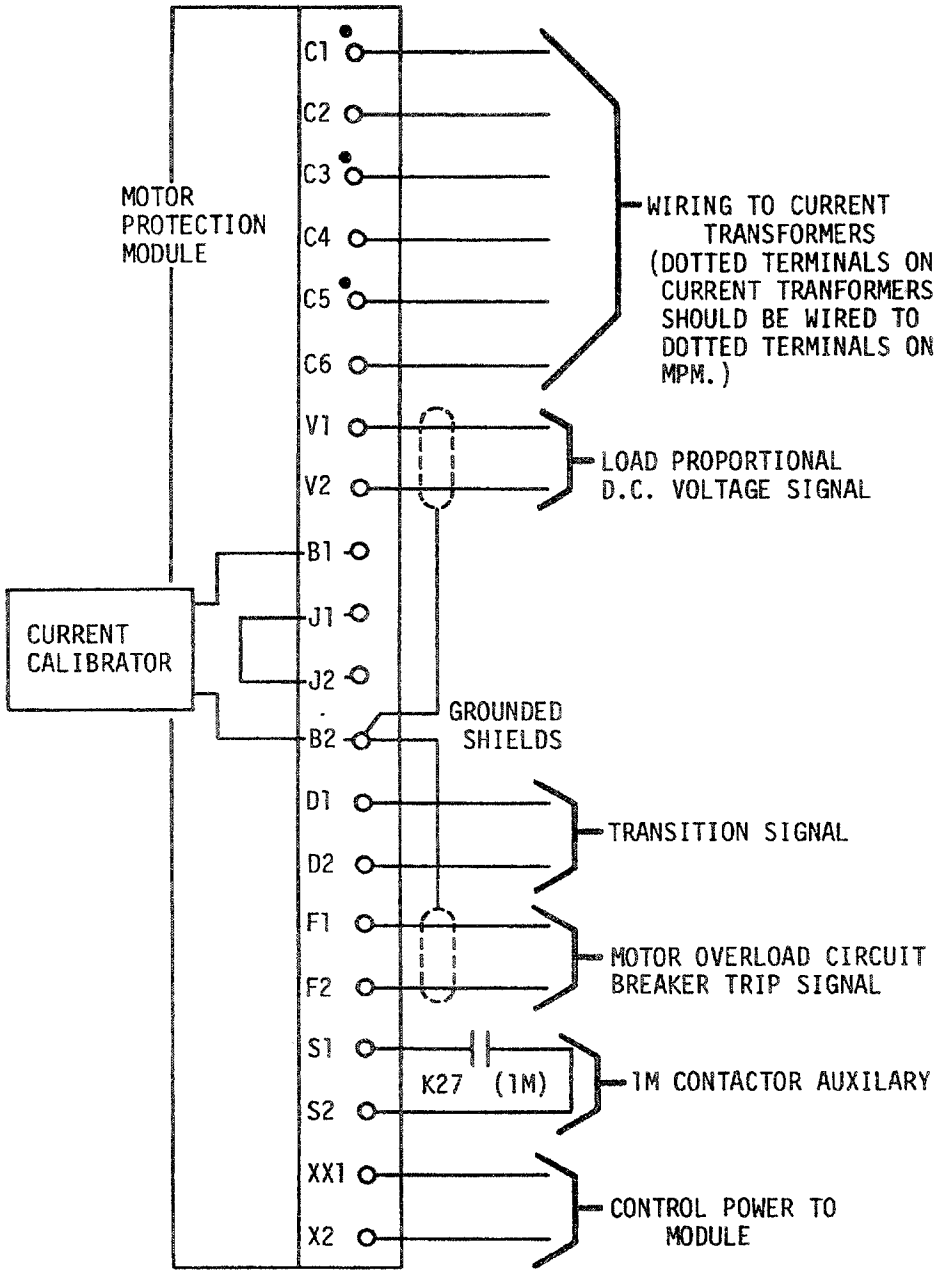

FIGURE 8 - MOTOR PROTECTION MODULE INTERCONNECTIONS

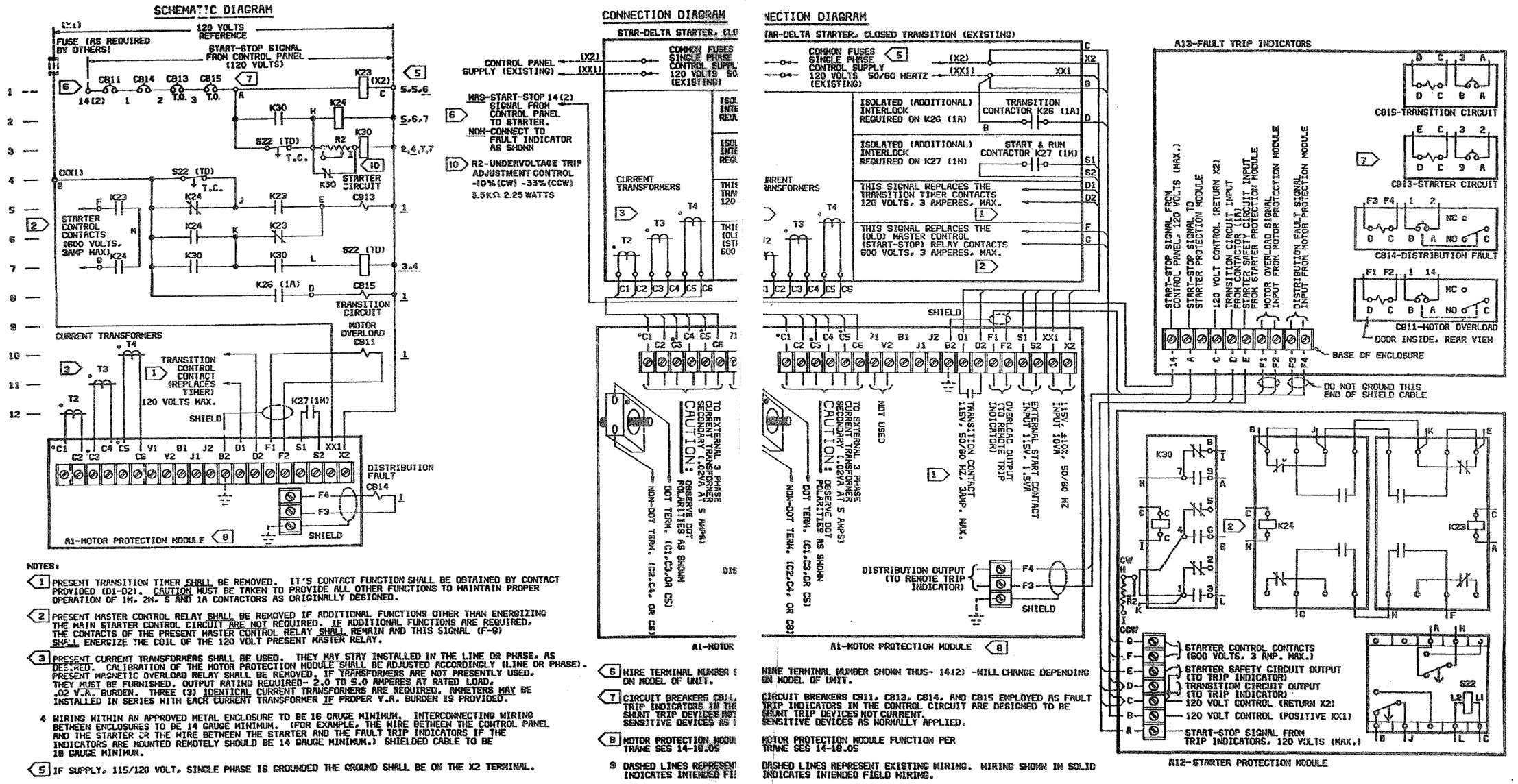

NOTES:

1. PRESENT TRANSITION TIMER SHALL BE REMOVED. IT'S CONTACT FUNCTION SHALL BE OBTAINED BY CONTACT PROVIDED (D1-D2). CAUTION MUST BE TAKEN TO PROVIDE ALL OTHER FUNCTIONS TO MAINTAIN PROPER OPERATION OF 1M, 2M, S AND 1A CONTACTORS AS ORIGINALLY DESIGNED.

2. PRESENT MASTER CONTROL RELAY SHALL BE REMOVED IF ADDITIONAL FUNCTIONS OTHER THAN ENERGIZING THE MAIN STARTER CONTROL CIRCUIT ARE NOT REQUIRED. IF ADDITIONAL FUNCTIONS ARE REQUIRED, THE CONTACTS OF THE PRESENT MASTER CONTROL RELAY SHALL REMAIN AND THIS SIGNAL (F-G) SHALL ENERGIZE THE COIL OF THE 120 VOLT PRESENT MASTER RELAY.

3. PRESENT CURRENT TRANSFORMERS SHALL BE USED. THEY MAY STAY INSTALLED IN THE LINE OR PHASE, AS DESIRED. CALIBRATION OF THE MOTOR PROTECTION MODULE SHALL BE ADJUSTED ACCORDINGLY (LINE OR PHASE). PRESENT MAGNETIC OVERLOAD RELAY SHALL BE REMOVED. IF TRANSFORMERS ARE NOT PRESENTLY USED, THEY MUST BE FURNISHED. OUTPUT RATING REQUIRED- 2.0 TO 5.0 AMPERES AT RATED LOAD, .02 V.A. BURDEN. THREE (3) IDENTICAL CURRENT TRANSFORMERS ARE REQUIRED. AMMETERS MAY BE INSTALLED IN SERIES WITH EACH CURRENT TRANSFORMER IF PROPER V.A. BURDEN IS PROVIDED.

4. WIRING WITHIN AN APPROVED METAL ENCLOSURE TO BE 16 GAUGE MINIMUM. INTERCONNECTING WIRING BETWEEN ENCLOSURES TO BE 14 GAUGE MINIMUM. (FOR EXAMPLE, THE WIRE BETWEEN THE CONTROL PANEL AND THE STARTER OR THE WIRE BETWEEN THE STARTER AND THE FAULT TRIP INDICATORS IF THE INDICATORS ARE MOUNTED REMOTELY SHOULD BE 14 GAUGE MINIMUM.) SHIELDED CABLE TO BE 18 GAUGE MINIMUM.

5. IF SUPPLY, 115/120 VOLT, SINGLE PHASE IS GROUNDED THE GROUND SHALL BE ON THE X2 TERMINAL.

6. WIRE TERMINAL NUMBER SHOWN THUS- 14(2) -WILL CHANGE DEPENDING ON MODEL OF UNIT.

7. CIRCUIT BREAKERS C811, C813, C814, AND C815 EMPLOYED AS FAULT TRIP INDICATORS IN THE CONTROL CIRCUIT ARE DESIGNED TO BE SHUNT TRIP DEVICES NOT CURRENT SENSITIVE DEVICES AS NORMALLY APPLIED.

8. MOTOR PROTECTION MODULE FUNCTION PER TRANE SES 14-18.05

9. DASHED LINES REPRESENT EXISTING WIRING. WIRING SHOWN IN SOLID INDICATES INTENDED FIELD WIRING.

FIGURE 10 - TYPICAL MOTOR-STARTER PROTECTION SYSTE PROTECTION SYSTEM ELECTRICAL DIAGRAMS

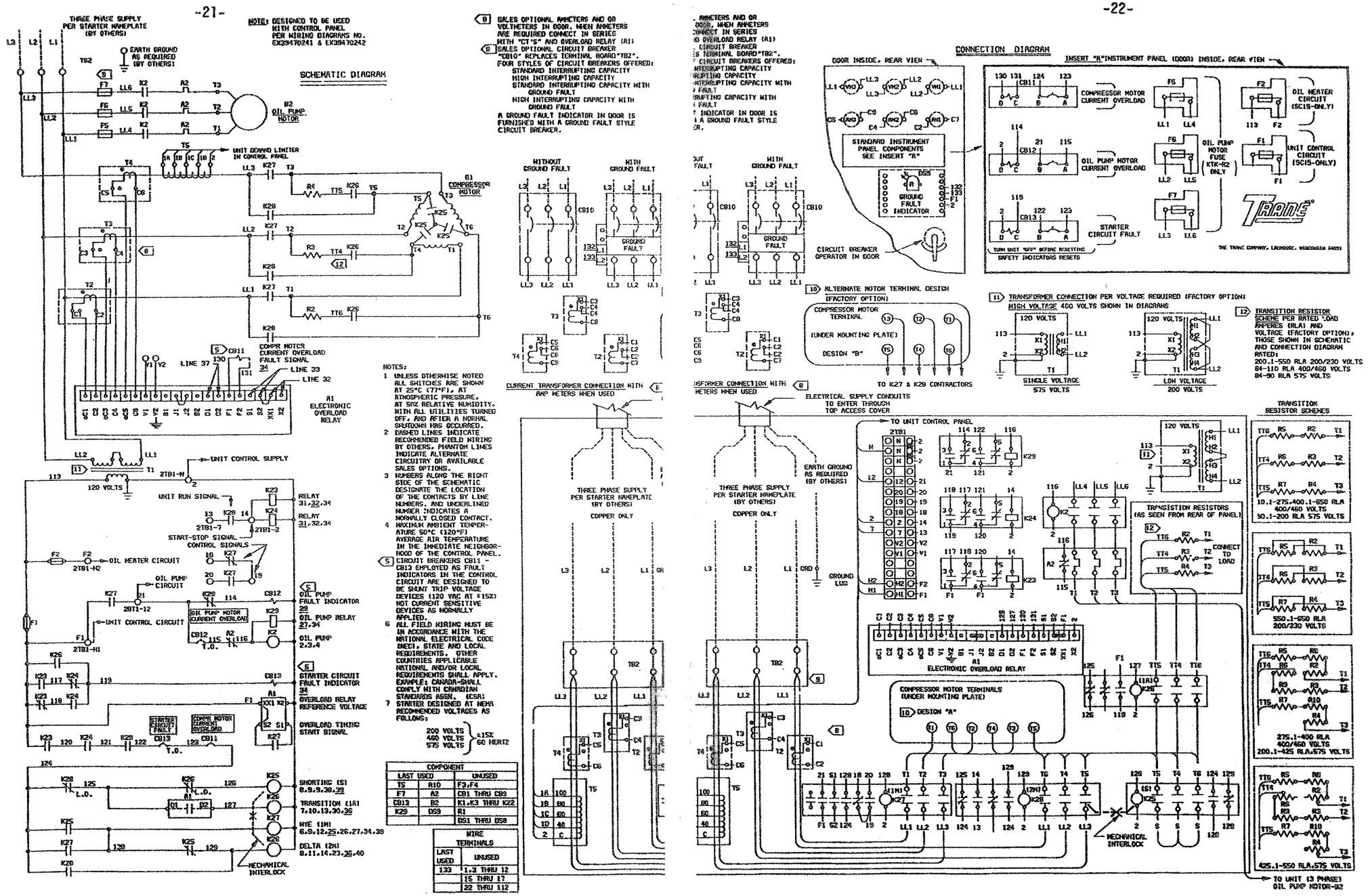

FIGURE 9 - TYPICAL UNIT MOUNTED STAR IIT MOUNTED STARTER ELECTRICAL DIAGRAMS

TRANE

General Service Bulletin

CTV-SB-48A

Library	Service Literature
Product Section	Refrigeration
Product	Centrifugal Liquid Chillers
Model	CTV
Literature Type	General Service Bulletin
Sequence	48A
Date	5/7/85
File No.	SV-RF-CTV-CTV-SB-48A-585
Supersedes	CTV-SB-48 781

SUBJECT: CENTRAVAC OPEN ROTOR DIAGNOSTIC PROCEDURE

INTRODUCTION:

This service bulletin provides the recommended procedure for diagnosing an open rotor bar condition in a CenTraVac motor.

DISCUSSION:

Each rotor bar in a CenTraVac motor is an electrical conductor intended to carry an electrical current between the two rotor end rings. When the rotor bar material is no longer metallurgically continuous due to a break, an open rotor bar condition exists. Partial separation of a rotor bar results in an increase in resistance which leads to localized heating in the rotor bar. If this condition is not corrected, the rotor bar(s) will continue to overheat and eventually burn open to the point where other damage to the motor bearings or stator may result.

When a CenTraVac motor has an open rotor bar, it will exhibit the following symptoms in varying degrees depending on the severity of the failure.

1. Fluctuating amperage under steady operating conditions.

   The magnitude and frequency of the current fluctuations will increase as the unit load increases. The frequency change results from rotor slip at high loads.

2. Oil pressure fluctuation.

   An open rotor bar may cause fluctuation of the unit oil pressure. This is a result of movement of the rotor within the journal bearing, which is caused by the disrupted current flow in the rotor as it passes around the stator fields.

Since The Trane Company has a policy of continuous product improvement, it reserves the right to change specifications and design without notice. The installation and servicing of the equipment referred to in this booklet should be

3. Mechanical vibration and noise.

A motor with an open rotor has a definite beat to the sound level of the unit which follows the current fluctuations. There will also be an increased amount of machine vibration as the condition worsens.

To properly diagnose an open rotor, the unit must be operated at a steady condition and be observed for the symptoms previously described. Control stability and machine operation without carryover or surging are absolute requirements for properly diagnosing an open rotor condition.

A simple field test using a variac can also be performed to aid in confirming an open rotor. This test is very limited due to its low current output and should not be used as the only basis for determining a defective rotor.

Variac Test Procedure

The following items are necessary to field test a rotor:

- Multi-amp relay tester or an amperage source with a maximum output of 110/60/1 volts and fused for a maximum of 5 watts output. This is the variac.
- An accurate A.C. voltmeter.
- An accurate low scale ammeter.

1. Open the unit disconnect switch and verify that there is no power available to the unit starter.

   WARNING: OPEN AND LOCK UNIT DISCONNECT TO PREVENT INJURY OR DEATH FROM ELECTRICAL SHOCK OR CONTACT WITH MOVING PARTS.

2. Remove the refrigerant charge and evacuate the unit. Break the vacuum with dry nitrogen to bring the unit to atmospheric pressure.

3. Remove the compressor suction elbow or second stage suction cover as required to gain access to the motor windings.

4. Connect the test equipment as shown in Figure 1.

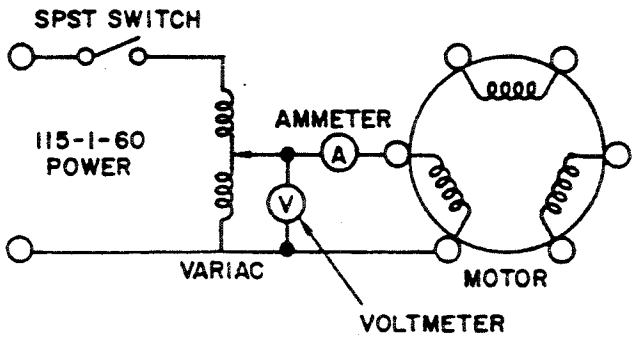

Figure 1
Test Circuit
With Variac

© The Trane Company 1985
La Crosse, Wisconsin 54601
Printed in U.S.A.

5. Apply 5 to 100 volts across one winding of motor. Control the output at 4 amps.

6. Slowly rotate the rotor by hand.

7. An amperage fluctuation of greater than 1/4 amp indicates an open rotor.

A more accepted test for confirming rotor defects requires the use higher voltage and current levels. The equipment needed to perform these tests is only available in a large motor rebuild shop or test facility. For this reason, the test will not be discussed in this bulletin.

PRINTED BY PRODUCTION SERVICES — LA CROSSE

KC /RJD

TRANE

General Service Bulletin

CTV-SB-60F

Library	**Service Literature**
Product Section	**Refrigeration**
Product	**Centrifugal Liquid Chillers**
Model	**CTV**
Literature Type	**General Service Bulletin**
Sequence	**60F**
Date	**April 18, 1994**
File No.	**SV-RF-CTV-CTV-SB-60F-494**
Supersedes	**CTV-SB-60E-593**

Literature changes:
CTV-SB-60B (9/84) -- Change CVHB & CVHE refrigerant charges.
CTV-SB-60C (5/89) -- Add note below Table 16.
CTV-SB-60D (8/91) -- Add refrigerant charge data for units using PDS component designators.
CTV-SB-60E (5/93) -- Add refrigerant charge data for CVHF units. Revise refrigerant charge data for CVHE units.
CTV-SB-60F (4/94) -- Table 17 and 18 replaced by new refrigerant weight tables.

Subject: CenTraVac© Refrigerant Charges

Introduction:

The purpose of this service bulletin is to define the refrigerant charge needed to insure reliable CenTraVac© operation. The models covered by this bulletin are CTV, CV, LCV, LOCV, OCV, PCV, CVHA, CVHB (standard and heat recovery versions), CVHE and CVHF.

Discussion:

Points to consider when determining the charge level of a CenTraVac© unit:

1. The refrigerant charge for a standard (non-heat recovery or free-cooling) machine is always based on evaporator size.

2. A typical heat recovery CenTraVac© with a split bundle condenser uses 50 pounds more refrigerant than a standard evaporator/condenser version of the same machine.

Since the Trane Company has a policy of continuous product improvement, it reserves the right to change specifications and design without notice. The installation and servicing of the equipment referred to in this booklet should be done by qualified, experienced technicians.

3. CVHA and CVHB machines with auxiliary heating condensers use a standard evaporator charge.

4. CVHE CenTraVacs with auxiliary condensers use 50 pounds additional refrigerant.

5. Early model machines have a number and/or letter combination that identifies the compressor, evaporator and condenser, in that order.

6. Standard combinations of CVHA and CVHB compressors, evaporators and condensers are listed in the tables of this bulletin.

7. The evaporator size of "pre-PDS" CenTraVacs are identified in the unit model number. Refer to appropriate table in this bulletin.

Exception: PCV and CV-style machines that shipped after November 1, 1971, require a smaller refrigerant charge. Changes were made in the evaporator design that are not reflected in the machine model number. Refer to the original start-up record to determine optimum refrigerant charge.

8. When certain machines are converted to motors that have a liquid refrigerant-cooled rotor, the refrigerant charge must be increased.

9. As of January 1, 1990, for CVHE units and May 14, 1991, for CVHB units, the evaporator shell size (CVSZ) and evaporator tube bundle sizes (EVBS) are identified in the Product Description Block of the unit nameplate. Unit refrigerant charge information is also included on the unit nameplate.

The following tables list refrigerant charge recommendations for typical chillers, including current production models. Variations are also listed where applicable.

Table 1 - Model CTV Refrigerant Charges

Refrigerant Type	Machine Size	Refrigerant Charge (Pounds)
CFC-113	50L	550
	75L	550
	100L	800
	125L	800
	150L	1100
CFC-11	200L	1600
	250L	2200
	300L	2200

 © American Standard Inc.

Table 2 - Model CTV Refrigerant Charges (Standard Units)

Refrigerant Type	Machine Size	Refrigerant Charge (pounds)
CFC-113	A-11-12	500
	B-11-12	500
	B-13-14	450
	C-21-22	700
	C-23-24	900
	D-23-24	900
	D-25-26	800
	E-25-26	800
	E-31-32	1100
CFC-11	F-25-26	1100
	F-31-32	1300
	F-41-42	1600
	F-43-42	1600
	G-41-42	1500
	G-52-52	2200
	H-51-42	1900
	H-51-52	1900
	H-53-54	1900
	J-53-54	1900
	J-61-62	2300
	J-63-64	2200
	J-65-64	2300
	K-63-64	2200
	K-71-72	3000
	L-63-64	2400
	L-71-72	2500
	L-73-72	2500
	L-73-74	2500
	L-75-64	2600
	L-75-72	2600
	N-73-74	2500
	N-83-84	3800
	N-85-86	3800
	R-83-84	3800
	R-85-86	3800
	Y-23-24	1100
	Y-25-26	1100
	Y-31-32	1400
	2J-83-84	4000
	2K-85-86	4000
	2L-85-86	4000
	2L-93-94	5400
CFC-113	A-BD-BQ	325
	B-BD-BQ	325
	B-BF-BV	420
CFC-113	C-BF-BV	420
	C-DD-DQ	500
	D-DD-DQ	500
CFC-11	Y-ED-EQ	900
	Y-EF-EV	900
	F-ED-EQ	900
	F-EF-EV	900
	F-GD-GO	1000
	F-GF-GV	1000
	G-GD-GQ	1000
	G-GF-GV	1000
	G-HD-HQ	1000
	G-HF-HV	950
	H-HD-HQ	1000
	H-HF-HV	950
	J-HF-HV	950
	J-KD-KQ	1200
	J-KF-KV	1150
	J-MD-MQ	1450
	J-MF-MV	1400
	K-MD-MQ	1450
	K-MF-MV	1400
	K-PD-PQ	1650
	K-PF-PV	1600
	L-PO-PQ	1650
	L-PF-PV	1600
	L-RD-RQ	2200
	L-RF-RV	2150
	N-RD-RQ	2200
	N-RF-RV	2150
	N-PJ-RX	2250
	N-PJ-SQ	2250
	N-RJ-SQ	2800
	N-RJ-SV	2800
	R-RJ-SQ	2800
	R-RJ-SV	2800
	N-TD-SV	2450
	R-TD-SV	2450
	R-TD-VQ	2450
	R-TF-VV	2300
	N-RJ-SQ	2800
	N-RJ-SV	2800
	R-RJ-SQ	2800
	R-RJ-SV	2800

Table 3 - Evaporator Cross Reference

Evaporator Size	Refrigerant Charge (Pounds)
BD	325
BF	429
DD	500
ED	900
EF	900
FD	1000
FF	1000
GD	1000
GF	1000
HD	1000
HF	950
KD	1200
KF	1150
MD	1450
MF	1400
PD	1650
PF	1600
RD	2200
RF	2150
MJ	2200
PJ	2250
RJ	2800
RK	2750
RL	2700
TD	2450
TF	2300
TJ	2200

Table 4 - Model CV Refrigerant Charges

Unit Model	Refrigerant Charge (Lbs.)	
	Shipped Prior To 11/1/71	Shipped After 11/1/71 With RVX or RCC Motors
CV6A-6C-6A	1300	1250
6J-7G	1300	1250
8C-9A	1850	1800
9F-10F	2150	2100
10H-12F	2300	2200

Table 5 - Model LCV Refrigerant Charges

Refrigerant Type	Machine Size	Refrigerant Charge (Pounds)
CFC-113	LCV-2C	600
	LCV-2F	575
	LCV-2H	700
	LCV-3A	675

Table 6 - Turbine Drive CenTraVac Refrigerant Charges

Refrigerant Type	Machine Size	Refrigerant Charge (Pounds)
CFC-11	TB-31-32	1300
	TB-43-42	1700
	TB-51-42	2200
	TC-41-42	1600
	TC-51-42	2200
	TC-51-52	2200
	TE-51-52	2200
	TE-53-54	2200
	TG-65-54	2500
	TG-63-64	2400
	TJ-63-64	2400
	TJ-75-64	3400
	TJ-75-72	3400
	TL-75-64	3400
	TL-75-72	3400
	TL-71-72	3200
	TL-73-72	3200
	TN-75-64	3400
	TN-75-72	3400
	TN-71-72	3200
	TN-73-72	3200
	TQ-83-74	4000
	TT-85-87	4000
	TT-73-94	5400
	TW-93-94	5400

Table 7 - Open Drive CenTraVac Refrigerant Charges

Refrigerant Type	Compressor	Evaporator	Refrigerant Charge (Pounds)
CFC-11	G, H	GD, GF	1000
	G, H	HD, HF	1000
	G, H	KD, KF	1200
	K, L	HD, HF	1000
	K, L	KD, KF	1200
	K, L	MD, MF	1450
	K, L	PD, PF	1650
	K, L	RD, RF	2200
	N, R	RD, RF	2200
	K, L	MJ	2200
	N, R	MF	2200
	K, L	PJ	2250
	N, R	PJ	2250
	N, R	RJ	2800
	N, R	RK, RL	2800
	N, R	TD, TF	2450

Table 8 - Model OCV Refrigerant Charges

Refrigerant Type	Machine Size	Refrigerant Charge (Pounds)	
		Shipped Before 11/1/71	Shipped After 11/1/71
CFC-11	OCV-3F	745	675
	OCV-3G	N/A	675
	OCV-3H	N/A	665
	OCV-3J	725	665
	OCV-4D	945	855
	OCV-4K	1265	1125
	OCV-5F	1175	1135
	OCV-6A-6C	1470	1420
	OCV-6J-6H	1470	1420
	OCV-7C	N/A	1420
	OCV-7G	N/A	1420
	OCV-8C	N/A	1700
	OCV-9A	1750	1700
	OCV-9F	2050	2000
	OCV-10F	2050	2000
	OCV-10H	2200	2100
	OCV-10J	N/A	2100
	OCV-12F	2200	2100

Table 9 - Model LOCV Refrigerant Charges

Machine Size	Refrigerant Charge (Pounds)*
LOCV 20S, 20m	3400
20L	4550
25S, 25M	4200
25L	5500
32S, 32M	5300
32L	6950
40S, 40M	6600
40L	8700
50S, 50M	8275
50L	10900
64S	10750

Table 10 - Model PCV Refrigerant Charges

Refrigerant Type	Machine Size	Refrigerant Charge (Pounds)
CFC-113	PCV-OJ	300
	PCV-1C	350
	PCV-1F	415
	PCV-1J	485

Table 11 - Model PCV Refrigerant Charges (CFC-11)

Size Unit	Refrigerant Charge (Pounds)			
	Shipped Before November 1, 1971		Shipped After November 1, 1971	
	With RCS Style Motor	With RPS/RVS Style Motor	With RCS Style Motor	With RPS/RVS Style Motor
PCV 2C	610	650	545	585
PCV 2F	600	650	590	640
PCV 2H	645	710	600	665
PCV 3A	630	695	570	635
PCV 3F	800	840	730	770
PCV 3J	780	820	720	760
PCV 4D	890	970	800	880
PCV 4K	1150	1240	1010	1100
PCV 5F	1060	1140	1020	1000

Table 12 - Model CVHA, CVHB Refrigerant Charges (Standard Units)

Model	Refrigerant Type	Evaporator	Standard Condenser	Extended Condenser	Refrigerant Charge	Refrigerant Add For Free Cooling
CVHA	CFC-113	A1	A1S	Not Available	300	Not Available
		B1	B1S	Not Available	350	Not Available
		C1	C1S	Not Available	415	Not Available
		D1	D1S	Not Available	485	Not Available
	CFC-11	E3	E3S	E3L	600	
		E2	E2S	E2L	545	140
		E1	E1S	E1L	640	140
		F2	F2S	F2L	665	175
		F1	F1S	F1L	635	175
		G2	G2S	G2L	770	300
		G1	G1S	G1L	760	300
		H1	H1S	H1L	880	340
		J2	J2S	J2L	1100	500
		J1	J1S	J1L	1100	500
CVHB		K1	K1S	K1L	1250	550
		L1	L1S	L1L	1250	600
		M2	M2S	M2L	1800	800
		M1	M1S	M1L	1800	850
		N1	N1S	N1L	2100	1050
		P1	P1S	P1L	2200	1050
		R1			2400	1100
		S1			2500	1100

Table 13 - Model CVHA, CVHB Component Combination Availability

Model	Evaporator	Standard Condenser	Extended Condenser
CVHA 008	A1	A1S	Not Available
CVHA 011	B1, Ca	B1S, C1S	Not Available
CVHA 015	B1, C1, D1	B1S, C1S, D1S	Not Available
CVHA 018	C1, D1	D1S, D1S	Not Available
CVHA 025	E1, E2, E3	E1S, E2S, E3S	E1L, E2L, E3L
CVHA 032	F1, F2	F1S, F2S	F1L, F2L
CVHA 038	G1, G2	G1S, G2S	G1L, G2L
CVHA 044	H1, J1, J2	H1S, J1S, J2S	H1L, J1L, J2L
CVHA 055	J, J2	J1S, J2S	J1, J2L
CVHB 061	K1, L1, M2	K1S, L1S, M2S	L1L, L1L, M2L
CVHB 080	K1, L1, M2	K1S, L1S, M2S	L1L, L1L, M2L
CVHB 095	M1, N1, P1	M1S, N1S, P1S	M1L, N1L, P1L
CVHB 125	M1, N1, P1	M1S, N1S, P1S	M1L, N1L, P1L

Table 14 - Refrigerant Charges for Heat Recovery Units

Refrigerant Type	Heat Recovery	Evaporator Designator	Condenser Designator	Refrigerant Charge
CFC-113	CVHA-012	B1	B1H/B1H	390
	CVHA-016	C1	C1H/C1H	450
	CVHA-022	E5	E2H/E2H	635
CFC-11	CVHA-025	E1	E1H/E1H	690
	CVHA-030	F5	F2H/F2H	715
	CVHA-032	F1	F1H/F1H	685
	CVHA-038	G2	G2H/G2H	820
	CVHA-039	G1	G1H/G1H	810
	CVHA-044	H1	H1H/H1H	930
	CVHA-054	J2	J2H/J2H	1150
	CVHA-055	J1	J1H/J1H	1100
	CVHB-061	K1	K1H/K1H	1300
	CVHB-061	M2	M2S/M2S	1800
	CVHB-080	L1	L1H/L1H	1300
	CVHB-080	M2	M2L/M2L	1800
	CVHB-095	N1	N1S/N1S	2100
	CVHB-125	P1	P1S/P1S	2200
	CVHB-155	S1	S1L/S1L	2500

Table 15 - Refrigerant Charges (CFC-11, HCFC-123) Model CVHB Using PDS Component Designators

SHELL SIZE	BNDL SIZE	SNGL L EV	HTRC L EV	AUX L EV	FRCL L EV
155L	1250	2200	2500	2250	3250
155E	1400	2500	2800	2550	3500
155E	1550	2500	2800	2550	3550

BNDL = Tube Bundle Size
E = Extended Shell
EV = Evaporator Shell
FRCL = Free Cooling
HTRC = Heat Recovery
L = Long Shell
S = Short Shell
SNGL = Single

Table 16 - Model CVHE Refrigerant Charges (CFC-11)

Shell Size	Evaporator Bundle Size Designator	Refrigerant Charge (Pounds) Compressor Size				
		013 - 020	022 - 032	035 - 050	055 - 080	089 - 125
Short Shells	1	340	575	770	1075	–
	2	340	560	760	1000	–
	3	320	545	730	980	–
	4	300	525	700	950	–
	5	300	440	660	820	–
Long Shells	1	450	750	1020	1550	2500
	2	450	750	1000	1450	2390
	3	425	674	975	1400	2360
	4	400	675	900	1375	2280
	5	400	620	870	1190	2140
Free Cooling (Short Shells)	1	480	725	1200	1980	–
	2	480	715	1040	1880	–
	3	450	660	1000	1740	–
	4	400	660	920	1730	–
	5	400	610	870	1660	–
Free Cooling (Long Shells)	1	640	1050	1580	2625	3450
	2	640	940	1370	2480	3260
	3	590	870	1300	2400	3125
	4	525	860	1210	2265	3020
	5	525	800	1140	2150	2770
Add For Heat Recovery Condenser		50	100	150	200	300
Add For Auxiliary Condenser		50	50	50	50	50

Note: For ECE Evaporators use the largest bundle size ("1") for short shells. (I.e., The refrigerant charge for a CVHE 035 with ECE evaporator would be 770 lbs.

Table 17
CFC-11 Refrigerant Charges for Model CVHE, CVHF Using PDS Component Designators
(Continued on Next Page)

EVSZ	EVBS	SNGL	HTRC	AUX	FRCL
020S	130	300	350	350	400
	140	300	350	350	400
	160	320	370	370	450
	180	340	390	390	480
	200	340	390	390	480
	220	340	390	390	480
020L	130	400	450	450	525
	140	400	450	450	525
	160	425	475	475	590
	180	450	500	500	640
	200	450	500	500	640
	220	450	500	500	640
032S	200	440	540	490	725
	230	525	625	575	800
	250	545	645	595	830
	280	550	650	600	835
	320	575	675	625	860
	350	575	675	625	860
032L	200	620	720	670	900
	230	675	775	725	960
	250	675	775	725	960
	280	750	850	800	1035
	320	750	850	800	1035
	350	750	850	800	1035
050S	320	650	800	700	1190
	360	700	850	750	1240
	400	730	880	780	1270
	450	750	900	800	1290
	500	770	920	820	1300
	550				
050L	320	870	1000	920	1400
	360	900	1050	950	1440
	400	975	1125	1025	1500
	450	1000	1150	1050	1500
	500	1000	1150	1050	1500
	550	1000	1150	1050	1500

Table 17
CFC-11 Refrigerant Charges for Model CVHE, CVHF Using PDS Component Designators

EVSZ	EVBS	SNGL	HTRC	AUX	FRCL
080S	500	820	1000	870	1480
	560	950	1150	1000	1600
	630	980	1180	1030	1600
	710	1000	1200	1050	1660
	800	1075	1275	1125	1700
	890	1075	1275	1125	1700
080L	500	1190	1390	1240	1800
	560	1375	1575	1425	2000
	630	1400	1600	1450	2000
	710	1450	1650	1500	2100
	800	1550	1750	1600	2200
	890	1550	1750	1600	2200
125L	800	2140	2440	2190	3100
	900	2280	2580	2330	3295
	1000	2340	2650	2400	3300
	1120	2390	2690	2440	3400
	1250	2500	2800	2550	3500
	1400	2500	2800	2550	3500
140E	1000	2400	2700	2450	3400
	1120	2500	2800	2540	3500
	1250	2600	2900	2650	3600
	1450	2500	2800	2540	3500
142M	890	1550	1800	1600	2500
	980	1600	1850	1650	2600
	1080	1650	1900	1700	2600
	1220	1720	1970	1760	2700
	1420	1650	1900	1700	2600
142L	890	1740	1990	1780	2700
	980	1800	2050	1850	2800
	1080	1860	2100	1900	2800
	1220	1930	2180	1970	2900
	1420	1860	2100	1900	2800
210M	1610	1820	2100	1860	2800
	1760	1900	2200	1950	2900
	1900	1960	2260	2000	2900
	2100	2160	2460	2200	3100
210L	1610	1820	2100	1860	2800
	1760	1900	2200	1950	2900
	1900	1960	2260	2000	2900
	2100	2160	2460	2200	3100

Table 18
HCFC-123 Refrigerant Charges for Model CVHE, CVHF Using PDS Component Designators
(Continued on Next Page)

EVSZ	EVBS	SNGL	HTRC	AUX	FRCL
032S	200	370	470	420	655
	230	390	490	440	675
	250	400	500	450	685
	280	420	520	470	700
	320	440	540	490	725
	350	460	560	500	745
032L	200	480	580	530	765
	230	500	600	550	785
	250	520	620	570	800
	280	550	650	600	835
	320	580	680	630	865
	350	600	700	650	885
050S	320	590	740	640	1100
	360	620	770	670	1160
	400	640	790	690	1180
	450	680	830	730	1200
	500	720	870	770	1260
	550	750	900	800	1290
050L	320	770	900	800	1300
	360	800	950	850	1340
	400	840	990	890	1380
	450	890	1040	940	1400
	500	940	1090	990	1480
	550	990	1140	1040	1500
080S	500	890	1090	940	1550
	560	930	1100	980	1590
	630	980	1180	1030	1600
	710	1040	1240	1090	1700
	800	1090	1290	1140	1700
	890	1150	1350	1290	1800
080L	500	1160	1360	1200	1800
	560	1200	1400	1250	1860
	630	1270	1470	1300	1900
	710	1350	1550	1400	2000
	800	1400	1660	1450	2000
	890	1500	1700	1550	2100
125L	800	1570	1800	1600	2585
	900	1600	1800	1650	2600
	1000	1700	1900	1700	2700
	1120	1790	2000	1800	2800
	1250	1890	2100	1900	2885
	1400	1970	2200	2000	2900
140E	1250	2090	2300	2100	3100
	1450	2200	2400	2200	3200

Table 18 - (HCFC-123) Refrigerant Charges for Model CVHE, CVHF Using PDS Component Designators

EVSZ	EVBS	SNGL	HTRC	AUX	FRCL
142M	890	1470	1700	1500	2485
	980	1500	1790	1550	2500
	1080	1600	1800	1650	2600
	1220	1680	1900	1700	2695
	1420	1800	2000	1800	2800
142L	890	1600	1800	1650	2600
	980	1700	1900	1700	2700
	1080	1790	2000	1800	2800
	1220	1870	2100	1900	2885
	1420	2000	2200	2000	3000
210M	1610	1880	2180	1900	2895
	1760	1990	2290	2000	3000
	1900	2090	2390	2100	3100
	2100	2100	2400	2100	3100
210L	1610	2090	2390	2100	3100
	1760	2200	2500	2200	3200
	1900	2300	2600	2300	3300
	2100	2400	2700	2400	3400

BNDL = Tube Bundle Size
EV = Evaporator Shell
FRCL = Free Cooling
HTRC = Heat Recovery
L = Long Shell
S = Short Shell
SNGL = Single

Printed by INLAND GRAPHICS, La Crosse, WI

TRANE™

General Service Bulletin

CTV-SB-61B

Library	Service Literature
Product Section	Refrigeration
Product	Centrifugal Liquid Chillers
Model	CTV
Literature Type	General Service Bulletin
Sequence	61B
Date	11/14/89
File No.	SV-RF-CTV-CTV-SB-61B-1189
Supersedes	CTV-SB-61A Dated 12/83 CTV-SB-35A Dated 7/81

Literature Change History:
CTV-SB-61 - Original service bulletin
CTV-SB-61A - General Update
CTV-SB-61B - Bulletin revised to include information for units equipped with MOV surge protectors.

Subject: CenTraVac Motor Insulation Resistance Testing

Introduction:

The purpose of this service bulletin is to discuss and clarify the recommended procedures for insulation resistance testing of CenTraVac motors. Also discussed are three procedures which are commonly used in the field, but which are subject to a wide range of interpretations.

Discussion:

There are a number of reasons why it is important to be able to determine a motor's insulation resistance value prior to operation of the motor. The following critical areas are where motor insulation resistance values are needed:

1. Upon start-up of a new machine installation.
2. At time of motor replacement due to repairs.
3. Routine checkout for preventive maintenance purposes.
4. When a machine has become contaminated with moisture.

Generally, a 500-volt DC megohm insulation tester is recommended for all resistance testing of CenTraVac motor windings. The use of a megger with a voltage output of more than 500 volts is not recommended for insulation systems of 600 volts or less because of the potential insulation damage due to the higher than normal operating voltage. A 1000-volt megger can be used on motors with insulation systems rated for 2300/4160 volts.

WARNING: Since the motor acts like a capacitor when voltage is applied, the motor winding terminal studs should be grounded to the motor frame after the testing has been completed. This will discharge any residual voltage in the motor that could result in severe electrical shock.

Since The Trane Company has a policy of continuous product improvement, it reserves the right to change specifications and design without notice. The installation and servicing of the equipment referred to in this booklet should be done by qualified, experienced technicians.

High potential (Hi-Pot) testing should not be conducted on CenTraVac motors in the field. High potential testing involves applying twice the motor rated voltage plus 1000 volts and then measuring the leakage to ground. This check is intended to verify integrity of windings during the assembly process. This test is not intended for field use and can be destructive to the motor. An example of the test voltage used for a 460-volt motor would be 2 x 460 = 920 volts + 1000 volts for a total of 1920 volts.

Caution: Do not attempt to measure insulation resistance on a centrifugal unit under a deep vacuum. The unit should be charged with refrigerant, a nitrogen holding charge, or be open to the atmosphere before a megohm insulation test can be performed. Megging a motor under a deep vacuum could result in a to ground condition even with extremely low voltages which can cause carbon tracking and damage to the motor windings. When this occurs, reapplication of normal motor voltages could cause a leakage path to ground which could result in extreme motor damage.

In October 1988, Trane began factory-mounting MOVs on each unit. The MOVs provide voltage surge protection on all 600-volt and less CenTraVac motors. When megging a motor with MOVs attached, the reading can vary from what would be expected for a good motor.

A normal megohm reading across a MOV is between 1.1 - 3.5 megohms. Manufacturing variations of the MOV disc itself will cause the different readings. Because of this, The Trane Company recommends that the MOVs be disconnected in order to get a true motor megohm reading.

A zero megohm reading will indicate a shorted MOV. If this happens, physical evidence of extreme heat should be seen. Also, tripped safety devices (circuit breakers or fuses) should be present. A MOV's primary mode of failure is shorted. The short will eventually result in an open, with physical evidence of damage.

An infinity reading or possible infinity reading, depending on the megohmeter scale, indicates an open circuit internal to the MOV. This type of failure is more than likely caused by a manufacturing defect rather than by a voltage surge.

Insulation Test Procedures:

1. Megohm One-Time Value/Comparison Curve

The megohm one time resistance value test versus a comparison curve simply provides a comparison of the megohm reading obtained when megging a motor as compared to the temperature and an acceptable megohm limit as shown in the curve (Figure 1). Any motor with a megohm resistance value to the right of the curve (Figure 1) is acceptable and can be started and operated.

It is important to note that in most cases the megohm value of a motor will be above the 50 megohm value. Motors with less than 50 megohms may have contamination on the windings, which will cause a lower than expected megohm value. As long as the insulation resistance of the motor falls to the right of the curve, the motor may be started. It is suggested that on any motor where the megohm reading appears to be lower than normal, but not less than 4 megohms, that the motor be run for a period of time (1/2 to 1 hour) to normally dissipate any moisture or other contaminates which may have accumulated on the motor windings and generally will show an increase in the megohm value. If the megohm value of a motor continues to drop, a problem may be indicated and further checks are in order. The following steps should be taken if the readings are still low or are continuing to drop:

[ ] Remove motor leads and megger test the motor at the motor terminals.

[ ] Wash entire terminal board with clean refrigerant or denatured alcohol.

[ ] Remove terminal board and megger test directly on the motor leads. The unit's refrigerant charge must be removed prior to removal of terminal board.

Figure 1
Insulation Resistance

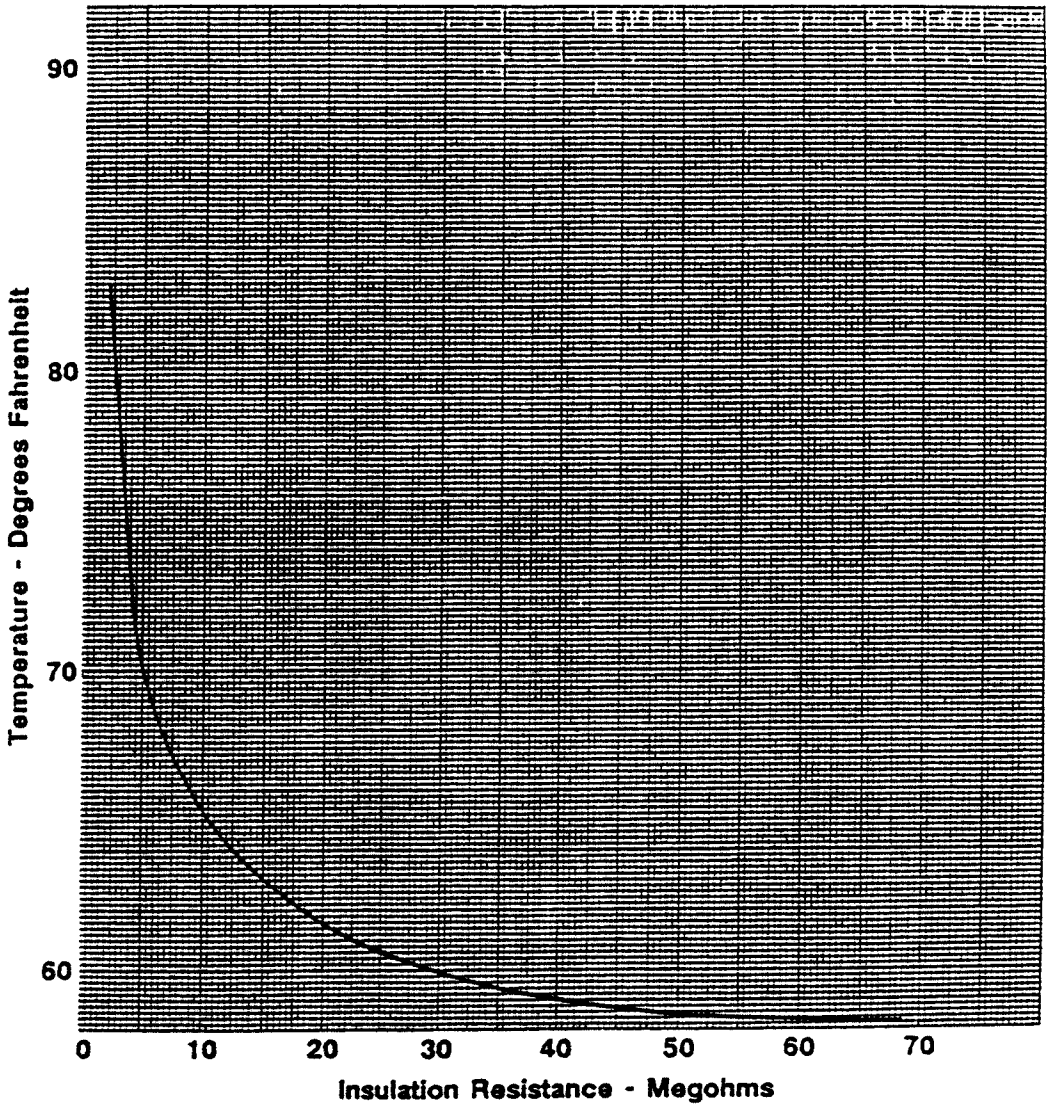

Notes:
1. If test value of insulation resistance is to the right of the curve, the motor is acceptable.
2. If test value is to the left of the curve, the motor must be operated with caution. The insulation resistance should be checked hourly until it has definitely been established that the insulation resistance is increasing. If it is decreasing, the motor should not be operated.
3. The motor should not be started if the insulation resistance is less than 4 megohms.

If comparisons between successive readings are to be made, they must all be corrected to a standard temperature. Figure 2 gives a winding temperature versus correction factor for 20 C. Newer motors are equipped with internal sensors which can be used to determine the winding temperature. If the motor is not equipped with internal sensors, it will be necessary to allow the motor to cool to room temperature before readings can be taken for comparison purposes.

2. Dielectric Absorption Ratio (60/30-second ratio)

To perform this test, a motor-driven or hand-crank type megger must be used to obtain megohm readings at specific intervals of time. The megger is used to provide a continuous voltage to the motor for a period up to 60 seconds. At intervals of 30 seconds and 60 seconds a megohm reading should be taken.

To determine the dielectric absorption ratio, which can then be compared to Table 1, the 60-second reading must be divided by the 30-second reading. The readings obtained using the 60/30-second absorption ratio method must be interpreted properly to determine the actual insulation integrity of the motor. This will be discussed later in the Service Bulletin.

Table 1 - Insulation Results

Insulation Condition	Polarization Index (10/1 Minute Ratio)	Absorption Ratio (60/30 Seconds)
Dangerous	Less than 1	Less than 1
Poor	Less than 1.5	Less than 1.1
Questionable	1.5 to 2	1.1 to 1.25
Fair	2 to 3	1.25 to 1.4
Good	3 to 4	1.4 to 1.6
Excellent	Above 4	Above 1.6

3. Polarization Index (10/1-minute ratio)

The polarization-index test method is similar to the dielectric absorption ratio method except that readings are taken at time intervals of 1 minute and 10 minutes respectively. The 10-minute reading must be divided by the 1-minute reading to determine the polarization-index ratio. The motor insulation quality can then be compared to Table 1.

The dielectric absorption ratio and polarization-index methods were originally specified in accordance with ANSI/IEEE (Standard #43, Recommended Practice for Testing Insulation Resistance of Rotating Machinery). The recommended tests were for all types of motors and were not specifically written for hermetic motors in a refrigerant atmosphere. The continuous application of a test voltage to a motor can cause some winding contaminates, such as moisture, to be driven from the windings which results in higher megohm readings after continued application of voltage. For this reason, the ratio figures were applicable to motors which had windings and leads with the ability to absorb moisture. Some of the older generation CenTraVac motors, prior to the newer designs, used insulation materials that could absorb moisture. The newer motors, however, are now using higher quality insulating material such as Daglas and Mylar, etc., which will not absorb moisture as the older cloth (cotton) type insulating materials would. Newer-style motor designs and their related insulating materials become charged more quickly, under similar conditions, than older motors. This affects the results of the electric-absorption and polarization-index test methods. It is possible that a polarization-index test on a good hermetic motor could show a high megohm value at both 10 and 1-minute intervals and yet not establish a large enough differential (ratio) to be considered acceptable as indicated in Table 1.

Figure 2
Winding Temperature Versus Correction Factor

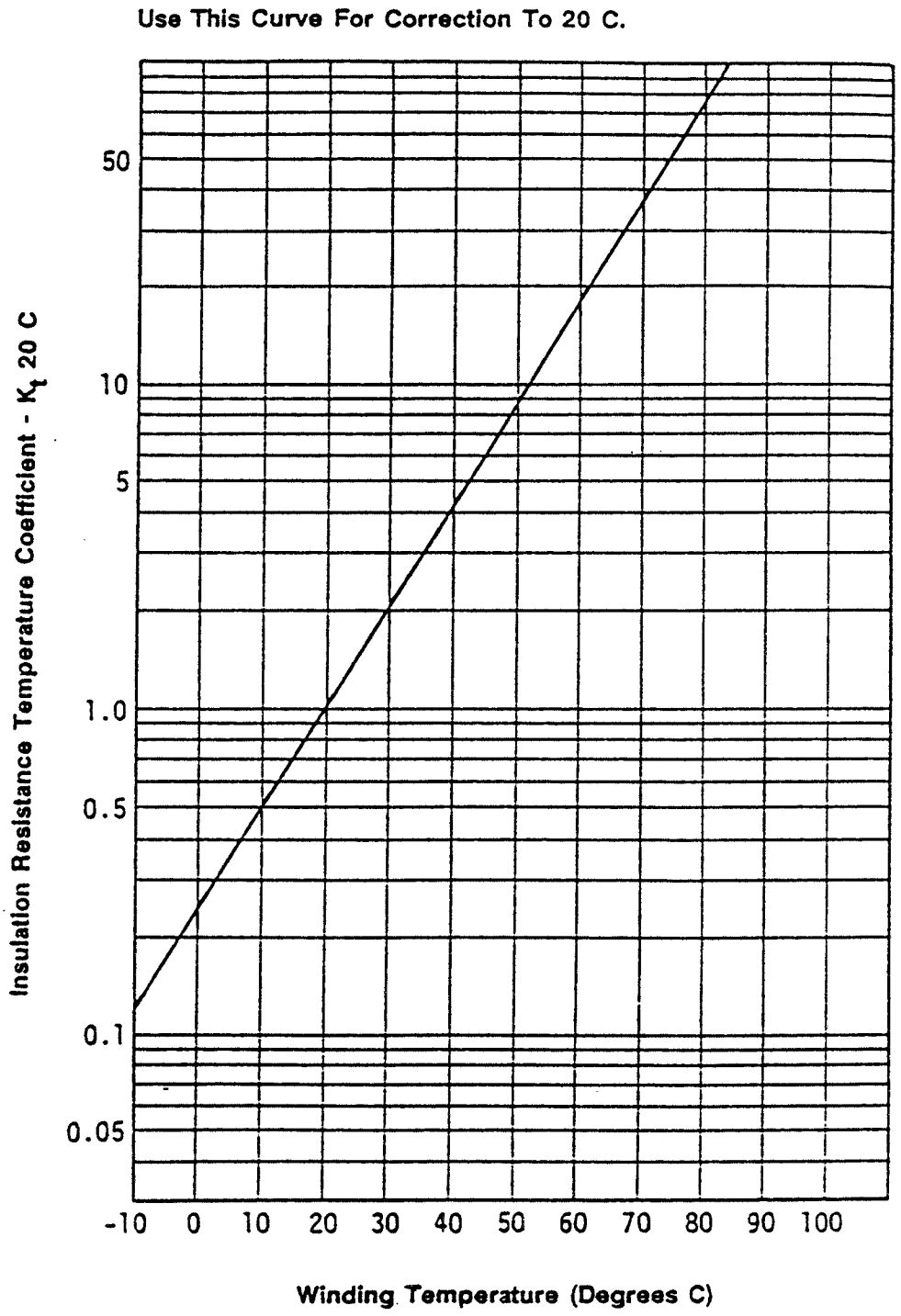

To convert observed insulation resistance (R_t) to 20 C, multiply by the temperature coefficient K_t 20 C.

$$R_{20}\ C = R_t \times K_t\ 20\ C$$

Test Recommendation:

The most generally accepted field method for determining winding insulation integrity is the one-time megohm test as compared to the curve shown in Figure 1.

The dielectric-absorption and polarization-index test methods are subject to a wide range of interpretation and should not be used solely to determine insulation quality of a CenTraVac motor.

The following guidelines should be used for field testing of CenTraVac motor windings:

1. The use of dielectric and absorption testing is subject to misinterpretation.

2. The one-time megohm reading versus the curve (Figure 1) is the most generally accepted field test method for measuring the megohm readings of all CenTraVac motors.

3. Do not high potential test CenTraVac motors in the field.

4. Under no circumstances should any voltage be applied to a motor while it is under a deep vacuum.

TRANE® AIR CONDITIONING

FILE INFORMATION:

DIVISION TAB-TRANE REFRIGERATION PRODUCTS
PRODUCT TAB-LIQUID CHILLERS-CENTRIFUGAL
CenTraVac
MODEL TAB-CTV
LITERATURE ITEM-GENERAL SERVICE BULLETIN

LITERATURE FILE NO.

CTV-SB-65

GENERAL SERVICE BULLETIN

Since the Trane Company has a policy of continuous product improvement, it reserves the right to change specifications and design without notice. The installation and servicing of the equipment referred to in this booklet should be done by qualified, experienced technicians.

11/5/82

SUBJECT: CENTRAVAC SOLID-STATE OVERLOAD NUISANCE TRIPOUT

INTRODUCTION:

The purpose of this Service Bulletin is to discuss nuisance tripouts of the solid-state overload (Motor Protection Module) used on CVHA/CVHB CenTraVacs. Module modification may be required to prevent nuisance motor overload tripouts at starter transition. This bulletin applies only to CVHA and CVHB low voltage machines shipped prior to July 1982. Units shipped after July 1982 have SSOLs which have been modified to prevent nuisance tripouts.

Other CenTraVacs which have the motor protection module system field installed may also be affected.

DISCUSSION:

Some CVHA and CVHB CenTraVacs have exhibited a nuisance motor overload trip which may occur at transition on star/delta starters. This is caused by high transient currents produced during transition. These transient currents do not occur on all units. The occurrence is dependent upon the speed of starter operation (contact closure during transition), motor construction (manufacture of stator) and unit load at start-up.

A starter which transitions slowly (takes a relatively long time for the contactors to complete transition once it has been initiated) may allow the motor to slip out of phase with incoming power. The resulting slip then can produce a transient current as the starter connects to delta. Because of this, older style units on which motor/starter protection retrofit kits are being installed, may also be susceptible to these nuisance tripouts.

The original manufacturing tolerances inherent in stator windings also influence the transition transient currents. Therefore, even with two identical motors it is possible that one may experience nuisance tripout and the other may not. It is not possible to predict which machines may experience nuisance tripouts until the unit is actually operating under field conditions.

A heavy evaporator load at start, (warm evaporator water) will typically cause longer acceleration times. High starting load causes transient currents which are higher and of longer duration. Therefore, a unit which starts normally with cool evaporator water, may experience a nuisance tripout under an extremely hot start condition.

©THE TRANE COMPANY 1982
COMMERCIAL AIR CONDITIONING DIVISION
LA CROSSE, WISCONSIN 54601
PRINTED IN U.S.A.

Overload Identification:

As stated in the Introduction section of this Bulletin, units shipped after July 1982 are equipped with SSOLs which have been modified.

Before proceeding to the corrective action section of this bulletin, the overload module should be inspected to determine if it is the earlier version. Examine the terminal strip as shown in Figure 1. When looking into the SSOL with the terminal strip toward the top, as it is mounted in the starter, the fifth and sixth terminals from the right in an unmodified SSOL are labeled F1 and F2. Terminals 5 and 6 in a modified SSOL are labeled E1 and E2. The upper two screw terminals on the swing out of an unmodified SSOL circuit board are labeled F3 and F4. The modified SSOL terminals are labeled E3 and E4 (see Figure 2).

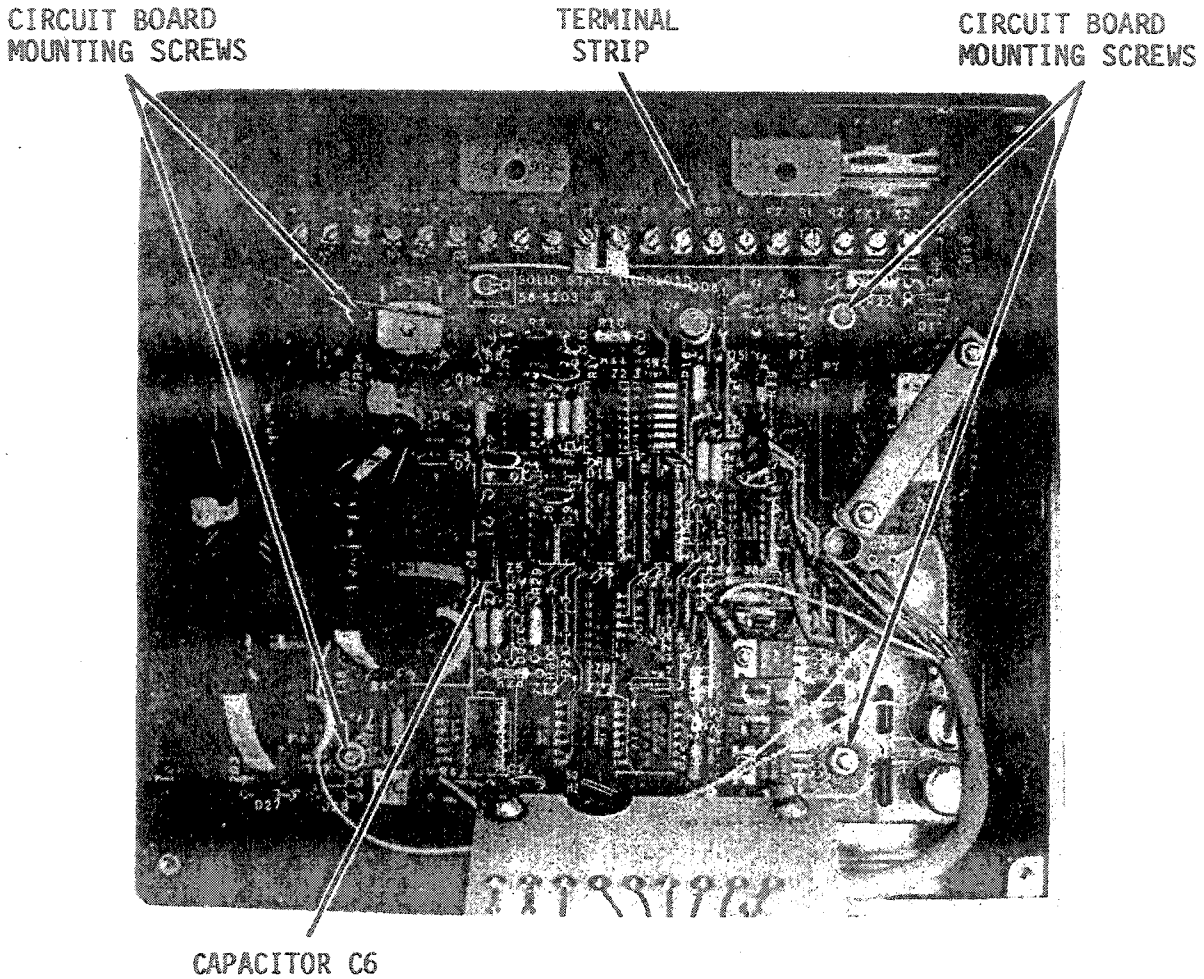

FIGURE 1 - Solid State Overload Circuit Board

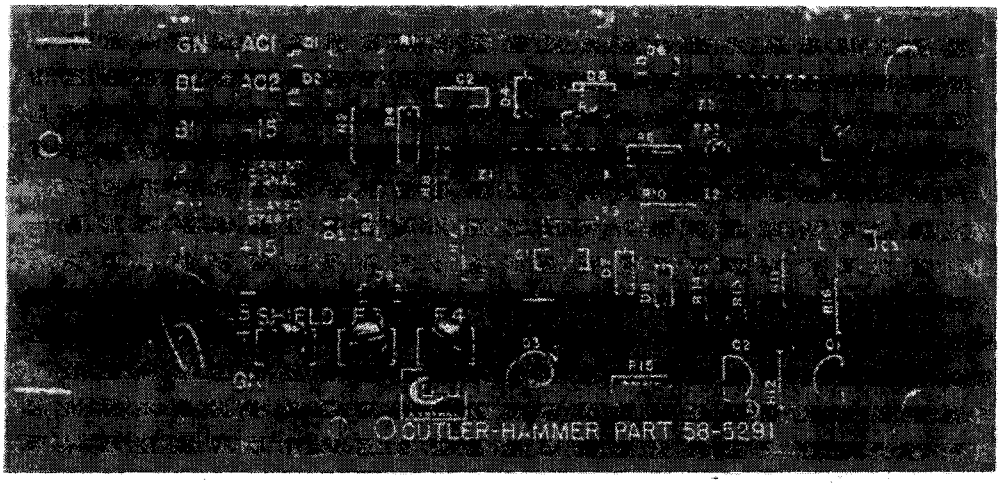

FIGURE 2 - Solid State Overload Swing Out Circuit Board

Any SSOL without the swing out circuit board is an unmodified model.

The modified SSOL has the changes described in this bulletin incorporated into its circuitry. Therefore, the modification described here is not applicable to a modified SSOL.

Tripout Diagnosis:

Proper identification of the exact time of the tripout occurrence is very important. The corrective action described in this bulletin applies only to tripouts which occur precisely as the contactors finish transition from start to delta. The motor will accelerate normally, transition will occur as the current drops to 80% of RLA as normal, but as soon as the contactors can be heard transitioning the "Motor Overload" fault trip indictor on the starter door will trip. If the nuisance tripout does not occur precisely at transition as described, the following corrective action does not apply.

CORRECTIVE ACTION:

Corrective action involves replacement of the C6 capacitor on the main circuit board in the SSOL. The C6 capacitor originally supplied on all SSOL's provides approximately an 8 cycle delay after transition before the module begins to sense running current. The addition of a larger capacitor increases the delay time preventing nuisance tripouts. The C6 capacitor that needs to be replaced is shown in Figure 1. This designation is written on the circuit board next to the capacitor. The capacitor has a flat rectangular shape and is orange in color.

For replacement, a 40 to 70 mf (micro farad) electrolytic capacitor rated between 35 and 50 volts should be used. Such capacitors are available at most electronic supply stores.

To remove the old capacitor, it will be necessary to remove the main circuit board. It is held in place by four screws located near the corners of the circuit board. See Figure 1. The board is held in place with electrical isolating washers and star lockwashers. Care must be taken to note the location of these parts while the board is being removed, so that they are replaced correctly.

Once the circuit board has been removed, the capacitor can be desoldered and removed.

NOTE: A soldering pencil of no larger than 35 watts should used when soldering electronic components. Higher power soldering irons may overheat the components causing failure.

Excess solder will often be left in the mounting holes when the old capacitor is removed. This may make installation of the new capacitor difficult. The excess solder may be removed with a desoldering tool or "solder sucker". This is a tool which sucks melted solder from the soldered joints. This tool is available at most electronic supply stores.

Once the old capacitor has been removed, the new one may be installed. The original capacitor was a non-polarized type while the new one is polarized and must be installed correctly.

NOTE: The new capacitor must be installed with the correct polarity to prevent failure of the SSOL.

The correct polarization of the capacitor is with the positive (+) end toward the terminal strip.

Insert the new capacitor into the circuit board and solder in place. Be careful not to use too much solder. Excess solder can cause a short circuit on the circuit board. Clip the excess wire off the capacitor leads. Bolt the circuit board back into the black box. Be careful to-reinstall all spacers and insulators in the correct position. Carefully reinstall the SSOL in the starter making sure it is wired correctly.

NOTE: The F1-F2 terminals of the unmodified SSOL are <u>not</u> 115 VAC power inputs. XX1-X2 are the 115 VAC power inputs. The control voltage wiring in the starter, which is used to power the SSOL, may be labeled F1 and F2. These wires do not go to F1 and F2 in the SSOL, they go to XX1 and X2. The F1 and F2 terminals of the SSOL should be wired to the "Motor Overload" fault trip indicator. Follow the unit wiring diagram when reinstalling the module.

<u>PARTS ORDERING INFORMATION:</u>

All parts should be purchased locally.

<u>NEW PRODUCTION:</u>

CenTraVac starters (direct ship and unit mounted) shipped after July 1982, are equipped with the modified SSOL which eliminates the nuisance tripout.

TRANE®

General Service Bulletin

CTV-SB-66F

Library	**Service Literature**
Product Section	**Refrigeration**
Product	**Centrifugal Liquid Chillers**
Model	**CVHE, CVHF, CVHG, CDHF, CDHG**
Literature Type	**General Service Bulletin**
Sequence	**66F**
Date	**February 2002**
File No.	**SV-RF-CTV-CTV-SB-66F-0202**
Supersedes	**SV-RF-CTV-CTV-SB-66E-1200**

Literature History:
CTV-SB-66D - 3/29/85 Added additional size Gasket Eliminator 515
CTV-SB-66E - Changed Trane Part Number for Chisel in Table 3
CTV-SB-66F – Added information for units built without o-rings

Subject: CenTraVac™ O-Ring and Flange Sealant

Introduction:
This service bulletin recommends the sealant and sealing methods to be used when installing new o-rings on Trane centrifugal liquid chillers using R11, R113 and R123. This bulletin also discusses recommendations for installing o-rings on Trane medium pressure centrifugal chillers using R12, R22 and R134a. The sealing of chiller components designed and assembled without the use of o-rings or gaskets is also covered in this bulletin.
Note: The information in this bulletin does not apply to sealing applications for flat rubber gasketed surfaces or other sealing methods and designs.

Discussion:
Trane recommends using Loctite Gasket Eliminator 515 on all refrigerant to atmosphere o-ring connections (except CVHE, CVHF, CVHG, CDHF and CDHG suction elbows to suction cover connection) on all centrifugal liquid chillers using R11, R113, R123, R12, R134a. The o-ring and its material properties along with the design of the casting mating surfaces are intended to provide a leak free joint without the aid of additional sealing compounds. However, providing an additional sealing mechanism with the use of Gasket Eliminator 515 extends the sealing design life of the joint and helps seal some of the minor surface imperfections in the casting and machined surfaces. These surface defects can occur due to nicks and gouges that occur due to disassembly and cleaning or due to rust and corrosion that can occur in some installations.

Minute leaks often show up at the jack-bolt holes on castings. Electronic leak detectors can often sense an intermittent refrigerant leak at the jack-bolt holes since this is a captive area where refrigerant will collect. An intermittent leak does not indicate the amount of actual leakage at that connection and additional methods should be used to verify the leak quantity. One such method is to evaluate the amount of purge time required to remove air from the unit. Another method is to plug the jack-bolt holes and use a soap solution to confirm a leak at the flange edges. Check the leak at the jack-bolt holes with a Halide leak detector and observe for a continuous leak indication. Make sure that any leak indication is properly evaluated to determine if further observations, unit testing or repairs are necessary.

© 2002 American Standard Inc.

Since Trane has a policy of continuous product improvement, it reserves the right to change design and specification without notice. The installation and servicing of the equipment referred in this document should be done by qualified, experienced technicians.

Trane recommends the use of Loctite Gasket Eliminator 515 to insure all R11, R113, R123, R12, and R134a centrifugal chiller refrigerant to atmospheric o-ring and flange connections are as leak free as possible after field repairs. This discussion may not apply to reciprocating or helical rotor compressor designs.

⚠ CAUTION

Chemical Irritant!

Loctite Gasket Eliminator 515 has been shown to be a skin, eye and respiratory irritant. Always wear proper eye protection, plastic or rubber gloves, long sleeves and pants and avoid prolonged inhalation of vapors. Obtain a copy of the vendors Material Safety Data Sheet (MSDS) and follow all safe handling practices provided. Failure to follow all safety instructions could result in minor to moderate injury.

Recommended Application:
Loctite Gasket Eliminator 515 is a relatively fluid substance that will not harden in the presence of air. It will set up to form an effective seal between the o-ring and the mating surface, or between the mating surfaces, in the absence of air after the flanges or castings have been properly torqued. Loctite should not be applied to any o-ring mating surface where excessive amounts of it can extrude or seep into undesirable areas, making removal of additional components difficult. An example of this would be the suction elbow o-ring to the suction cover on CVHE, CVHF, CVHG, CDHF and CDHG units. See Figure 3. See the section for installation of the suction elbow.

To insure a leak free joint after rebuild, apply Loctite Gasket Eliminator 515 to grooved o-ring joints as follows:

Check the fit of the o-ring in the flange or casting groove to insure the correct size o-ring is being used. See the section entitled "Determining Maximum Allowable O-Ring Stretch".

1. Inspect the o-ring groove for nicks and scratches. Minor surface scratches or nicks can be repaired by filling the imperfections with a soft soldering material, then filing or sanding the surface to a acceptable finish as described in the "Flange Surface Preparation" section.

2. Remove all high spots or burrs that may have occurred on the flange faces because of the use of the jack bolt holes. File the high spots and burrs to obtain a flat surface.

3. Check the expiration date on the tube of Loctite. Important! Do not use Loctite beyond the expiration date.

4. Apply a bead of Loctite 515 (1/8" diameter max) to the entire circumference of the bottom inside diameter (I.D.) of the o-ring groove as shown in Figure 6.

5. Place the o-ring into the groove and gently press it into sealant.
   Note: O-Rings should not be stretched more than 5 % of their inside diameter dimension once seated in the groove. See section on determining the maximum amount of allowable stretch.

6. Apply a bead of Loctite 515 (1/8" diameter max.) to the entire circumference between the o-ring and top outside diameter (O.D.) of the groove as shown in Figure 6.

7. A final smaller bead (1/16" diameter maximum) should be applied around the flange-mating surface between the o-ring groove and the bolt holes as shown in Figure 6.

8. Assemble the mating surfaces and install and properly torque all bolts. Ideally, Loctite recommends that no more than 3 minutes be allowed to elapse between the mating of the flanges and the application of the final bolt torque.

9. In standard conditions (plant room temp 21°C (70°F) or above) allow the Loctite to cure for a minimum of 8 hours before adding refrigerant to the unit.

The use of Loctite Primer N® or Loctite Primer T® accelerators will reduce the effective cure time of the Loctite 515 to as little as 15 minutes, thereby increasing the risk of the product partially curing before assembly and final bolt torque. If the Loctite partially cures during assembly it may act as a shim and prevent a proper seal. Because of this risk the use of accelerating primers is not recommended as a standard service procedure.

Determining Maximum Allowable O-Ring Stretch:
In general, o-rings used by Trane in sizes larger than 20.0" inside diameter (I.D.) are furnished in one-inch increments. The actual inside diameter of o-ring machined grooves may vary depending on the application, which may require a standard size o-ring to be stretched to fit the groove I.D. For instance an o-ring with a 60.0" I.D. will have an inside circumference of 60.0 x 3.14 (Pi) or 188.4". When used in a groove with a 60.75" I.D. (60.75 x 3.14 = 190.75" inside circumference) the o-ring will need to be stretched approximately 190.75" – 188.4" or 2.35".

O-rings may be stretched up to 5% of their inside diameter per the manufacturer's recommendations. In the example above, the 2.35" of stretch is well within the allowable tolerance for an o-ring with a 60.0" I.D.

Before installing an o-ring with Loctite hold it up to the groove and determine the amount of stretch that will be required. To do this place the o-ring in the top of the groove and work it around the groove until the bottom portion of the o-ring becomes horizontal. See Figure 5. Do not stretch the o-ring at this point. Measure the distance (Dimension "A") from the bottom of the horizontal o-ring to the bottom inside diameter of the o-ring groove. Determine the actual inside diameter of the o-ring machined groove and find the groove diameter closest to the actual measured value in Table 1. Compare the measured dimension "A" to the value shown in the table +/- 1/4" to determine if the required stretch will be less than the maximum allowable 5%. The following table shows the maximum allowable dimension "A" for all o-ring sizes from 20.0" to 60.0" inches. Any o-ring where the dimension measured is greater than the "A" dimension shown in Table 1 should not be used as the amount of stretch required will be greater than the 5% allowed by the o-ring manufacturer. Dimension "A" for any groove inside diameter can be determined by multiplying the measured groove inside diameter x .2204.

Example: Groove measured at 36.75" I.D. x .2204 = 8.1" "A" dimension.

Table 1 – Shows Maximum Allowable "A" for All O-Ring Sizes

Groove I.D.	Dim. "A"	Groove I.D.	Dim "A"	Groove I.D.	Dim. "A"
20	4.4	34	7.5	48	10.6
21	4.6	35	7.7	49	10.8
22	4.8	36	7.9	50	11.0
23	5.1	37	8.2	51	11.2
24	5.3	38	8.4	52	11.5
25	5.5	39	8.6	53	11.7
26	5.7	40	8.8	54	11.9
27	6.0	41	9.0	55	12.1
28	6.2	42	9.3	56	12.3
29	6.4	43	9.5	57	12.6
30	6.6	44	9.7	58	12.8
31	6.8	45	9.9	59	13.0
32	7.1	46	10.1	60	13.2
33	7.3	47	10.4		

Suction Elbow To Evaporator Flange:
The lower suction elbow to evaporator flange joint can be assembled using Loctite as described above.

The upper suction elbow connection to the compressor suction cover should be installed with no Loctite sealant on the o-ring and a back up Gore-Tex (GKT-2694) tape installed between the o-ring groove and the inner suction connection opening in the elbow. See Figure 4.

Installing the Gore-Tex tape:

1. Remove the adhesive backing strip from the Gore-Tex tape and install the material approximately 1/8" inboard of the o-ring groove I.D. This should be done before installation of the o-ring to avoid contaminating the surface with petroleum jelly, which could prevent the Gore-Tex from adhering to the flange surface.

2. Overlap the ends of the Gore-Tex as shown in Figure 4.

3. Lightly coat the o-ring with petroleum jelly to help it stay in the o-ring groove during installation.

Units Without Jack-Bolt Holes:
In any application using Loctite 515 as a sealant, jack-bolt holes should be present for future disassembly. If jack-bolt holes are not present refer to Figure 7 and the following procedure to tap the casings. The procedure is for CVHE units but can be modified for all other units.

Note: Model CVHE CenTraVacs built prior to November 1983 do not have jack-bolt holes. Some of these units were assembled with Loctite and will need jack-bolt holes. Casings should not be forced apart without the use of jack-bolts. Follow the procedure below. Uneven force could cause the casings to crack□

1. Remove three of the 5/8-11 bolts (120 degrees apart) that hold the casings together. The bolt clearance hole opening will be 3/4"-inch diameter.

2. Refer to Table 2 and select the proper tap for the 3/4" inch bolt hole opening. For this example, use a 7/8"-9 tap.

Table 2 – Shows Proper Tap for 3/4" Bolt Hole

Bolt Hole Opening	Tap Size	Threads Per Inch
5/16"	3/8"	16
27/64"	1/2"	13
17/32"	5/8"	11
3/4"	7/8"	9

3. Tap the holes with a 7/8"-9 tapered tap, which will allow several threads to be started easily. The remaining tapping should be done by using a 7/8"-9 bottoming tap. This will allow the maximum number of threads to be formed without damaging the 5/8"-11 threads in the adjoining casting.
   Note: When tapping, a cutting oil should be used to minimize the possibility of tap breakage or thread damage.

4. To separate the casings, insert the 5/8"-11 bolt as shown in Figure 7. Insert a 1/2" steel ball and the 7/8"-9 bolt. By removing the remaining 5/8"-11 bolts and inserting the rigging and guide pins as necessary to remove the casing, the 5/8"-11 bolts can be tightened until they exert force on the steel balls and the 7/8"-9 bolts. This force, when uniform at all three points, will separate the casings.

5. With proper rigging the casing can be removed safely.

When Loctite 515 has been used, field clean-up of the casings can be difficult. Loctite offers gasket-removing compounds called "Chisel" and "Chisel MC Free," which are available in aerosol cans. When using "Chisel," "Chisel MC Free," or any other solvent, the manufacturer's safety recommendations should always be followed completely.

The use of Loctite on flat rubber gaskets is not recommended.

⚠ WARNING

Hazardous Chemicals!

Some gasket removal compounds (such as Loctite #790 Gasket Remover- Chisel) may contain chemicals that are known be skin, eye and respiratory tract irritants. Always wear proper eye protection, plastic or rubber gloves, long sleeves and pants and avoid prolonged inhalation of vapors. Obtain a copy of the vendors Material Safety Data Sheet (MSDS) and follow all safe handling practices provided. Failure to follow all safety instructions may result in death or serious injury.

CenTraVac Flanges Assembled Without O-Rings:

Beginning in late 1999 Trane began eliminating the use of some o-rings and gaskets in motors and compressors on CVHE/F/G, CDHF/G, and CVGF units. Loctite 515 Gasket Eliminator® is used alone to seal flanges designed and constructed without o-rings or gaskets. In the early stages of the program only the inspection covers and end shields of the CenTraVac motors were affected, later results of the program will include other various motor and compressor flange assemblies. Various CVGF motor and compressor joints are also assembled using this new technology and may be without o-rings or gaskets. This section will provide the proper service procedure to be used when servicing a motor or compressor flange assembly that does not have an o-ring groove, an o-ring, or a gasket.

Note: Components designed and assembled without o-rings use a new flange design that eliminates the o-ring groove. The procedures described in this section do not apply to components that were originally assembled with o-rings. Units originally constructed with o-rings should be properly repaired using o-rings in conjunction with Loctite 515 sealant. Refer to the preceding sections of this bulletin for information regarding the servicing and repair of CenTraVac flanges and joints constructed with o-rings.

Figure 1: Typical original flange design with o-ring groove.

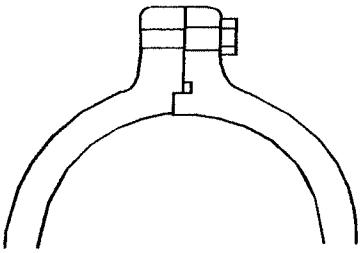

Figure 2: Typical new flange design with o-ring groove removed.

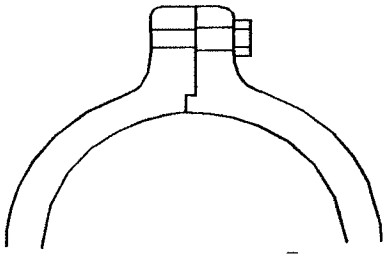

Flange Separation:

Unit flanges constructed without the use of o-rings or gaskets will have adequate jack-bolt holes to allow the separation of the sealed flanges. Insert the appropriate size bolts into the jack-bolt holes, and install the rigging and guide pins that are necessary to safely remove the part. Remove the remaining bolts and apply a uniform tightening force to all jack-bolts and the flanges will separate.

Flange Surface Preparation:

Surface preparation prior to the reassembly of a joint constructed without o-rings will first require the removal of the old Loctite 515.

Cured Loctite 515 may be removed with a scraper, such as a putty knife or gasket removal tool, if care is taken to not seriously scratch or gouge the flange. Wire or abrasive bristle brushes, either hand or powered, may also be used but care must be taken to ensure that you do not polish the flange. Do not use solid grinding wheels or disks or powered sanding tools because of the excessive damage they may cause to the flange surface.

Remove all high spots or burrs that may have occurred on the flange faces because of the use of the jack bolt holes. File the high spots and burrs to obtain a flat surface.
Loctite 515 is not effective on polished or "glass-smooth" surfaces. If a flange surface does get extremely smooth (mirror-like), use some 80 to 120 grit sandpaper on a hand-sanding block to rough up the surface and complete the removal of the cured Loctite.

If using a gasket removal chemical such as Loctite Chisel® or Chisel MC Free®, read and follow all of the manufacturers' directions carefully. Review the product MSDS sheet and be aware of and follow any safety requirements for eye, face, and hand protection, space ventilation, respirator use, waste disposal, etc.

⚠ WARNING

Hazardous Chemicals!

Some gasket removal compounds (such as Loctite #790 Gasket Remover- Chisel) may contain chemicals that are known be skin, eye and respiratory tract irritants. Always wear proper eye protection, plastic or rubber gloves, long sleeves and pants and avoid prolonged inhalation of vapors. Obtain a copy of the vendors Material Safety Data Sheet (MSDS) and follow all safe handling practices provided. Failure to follow all safety instructions may result in death or serious injury.

During Loctite removal, use cloth or plastic to cover any openings in the parts or the chiller. Avoid the uncontrolled use of compressed air or nitrogen to blow sealant debris from the part, as it may push the debris into inaccessible areas. Take all possible actions to keep the internal chiller parts clean and free of debris.

After the flange surfaces are free of any cured Loctite and the surface finish is acceptable, wipe the flanges clean with industrial quality Isopropyl Alcohol applied with a clean towel or rag. Do not contaminate the flange surface by using a dirty or oily rag. Do not use a rag that deposits fibers on the surface. Do not use Isopropyl Alcohol wipes that contain lanolin or other oils. Avoid touching the cleaned flange surface with bare hands as body oils can affect the adhesion of the sealant.

Sealant Application:
With both mating flanges fully cleaned and ready, select one of the flanges and apply 2 continuous beads of Loctite 515 in a crossing pattern as shown in Figure 8. The approximate thickness of each bead of sealant is given in Table 3. The thickness of the bead that is applied can be adjusted by trimming the tip of the applicator tube and by varying the pressure that is applied to the sealant container. Practice on a different surface may be desirable before applying Loctite to the actual flanges.

Ensure that all process holes and jack-bolt holes have sufficient Loctite 515 applied directly around them. A process hole is a hole that was used during the factory machining process, it may be unused or open on the final assembled product.

Table 3: Loctite 515 bead size when no o-ring is applied

Flange Face Width (inches)	Sealant Bead Size (inches)
1 1 ¼	3/32
1 ½ 1 ¾ 2 2 ¼	1/8
2 ½ 2 ¾ 3 3 ¼ 3 ½	5/32
3 ¾ 4	3/16

After the sealant is applied, quickly assemble the flanges and properly torque all fasteners.

Loctite 515 is an anaerobic sealant and very little curing will occur until the sealant is pressed between the flanges and air can no longer contact it. However, Loctite 515 will begin to cure very quickly once the flanges are assembled. Because of it's fast cure rate it is recommended that the time between Loctite application, flange assembly, and final bolt torque be kept as short as possible. Ideally, Loctite recommends that no more than 3 minutes be allowed to elapse between mating of the flanges and applying the final bolt torque.

Typical effective cure times for Loctite 515 will range from 1 to 12 hours depending on surrounding temperatures and flange gaps. For our typical applications and in a plant room with a surrounding temperature of 21°C (70°F) or higher we recommend that a minimum of 6 to 8 hours be allowed before pressure testing, evacuation, or charging of the unit. For plant room temperatures below 21°C (70°F) a minimum time of 12 hours is recommended before pressure testing, evacuation, or charging of the unit.

Application of Loctite 515 at ambient temperatures below 8°C (46°F) is not recommended.

⚠ CAUTION

Chemical Irritant!

Loctite Gasket Eliminator 515 has been shown to be a skin, eye and respiratory irritant. Always wear proper eye protection, plastic or rubber gloves, long sleeves and pants and avoid prolonged inhalation of vapors. Obtain a copy of the vendors Material Safety Data Sheet (MSDS) and follow all safe handling practices provided. Failure to follow all safety instructions could result in minor to moderate injury.

The use of Loctite Primer N® or Loctite Primer T® accelerators will reduce the effective cure time of the Loctite 515 to as little as 15 minutes, thereby increasing the risk of the product partially curing before assembly and final bolt torque. If the Loctite partially cures during assembly it may act as a shim and prevent a proper seal. Because of this risk the use of accelerating primers is not recommended as a standard service procedure.

Parts Ordering Information:
Loctite Gasket Eliminator 515 and Gore-Tex tape are available from Trane as follows.

Table 4 – Shows Gasket Eliminator 515 and Trane Information

Description	Trane Part Number
Gasket Eliminator 515 (50 ml tube) (Carton 10 pieces)	SEL00489
Gasket Eliminator 515 (300 ml caulking tube)	SEL00376
Gore-Tex (.03 + K x .12W x 150 inches)	GKT02694

Note: Loctite 515 Gasket Eliminator® should ideally be stored in a cool, dry location in unopened containers at a temperature that is between 8° to 28°C (46° to 82°F). Do not use previously opened sealant. Loctite 515 Gasket Eliminator® has a limited shelf life, SEL00376 300ml caulking tubes have a "use by" date marked on each individual tube. Smaller SEL00489 50ml tubes have the "use by" date marked on the bulk carton the tubes are shipped in, so be sure to note this date when removing tubes from the carton for individual sale or use.

Review the Loctite 515 Gasket Eliminator® MSDS sheet and be aware of and follow any safety requirements for eye, face, and hand protection, space ventilation, respirator use, waste disposal, etc.

Figure 3: Suction Elbow Flange to Compressor Gortex Application

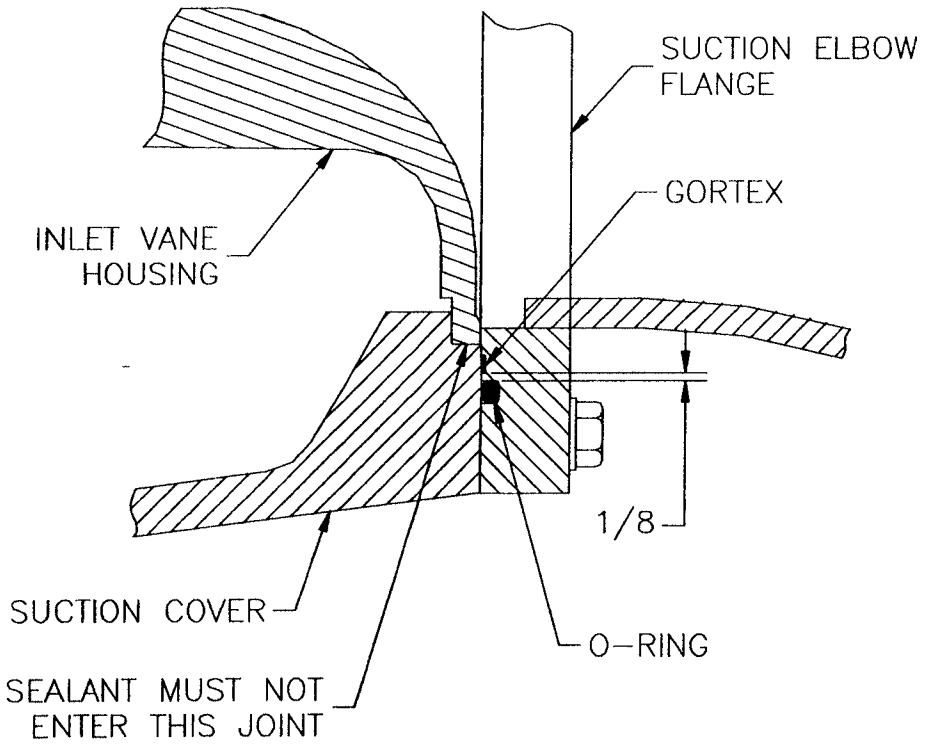

Figure 4: Suction Elbow Flange to Suction Cover Gortex Application

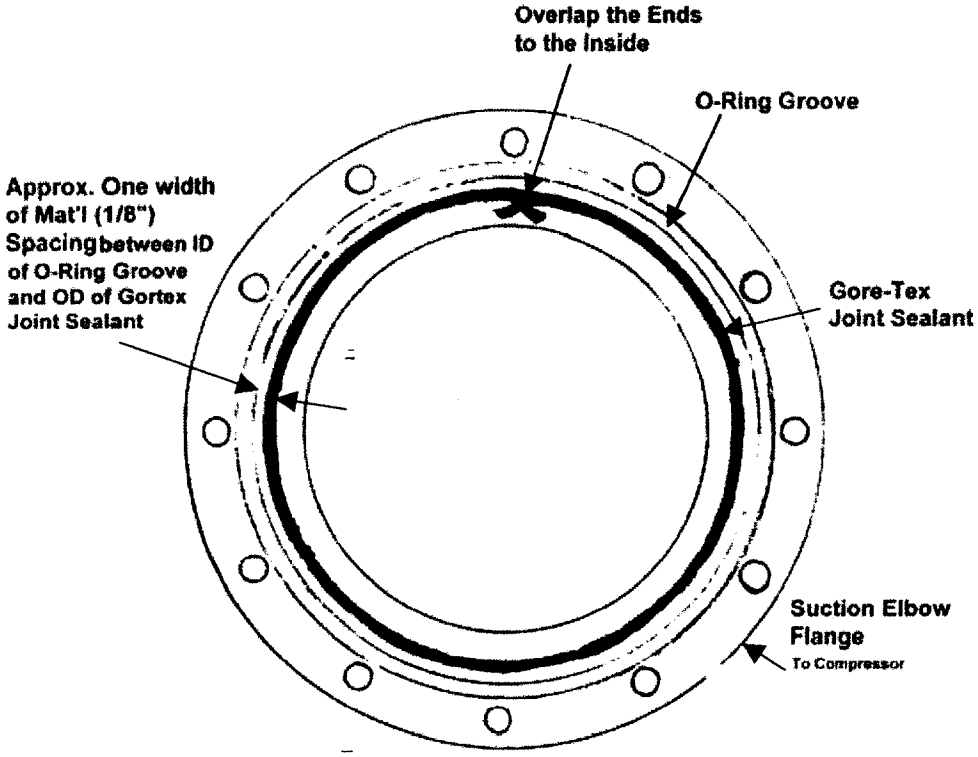

Figure 5: Example of O-Ring Stretched

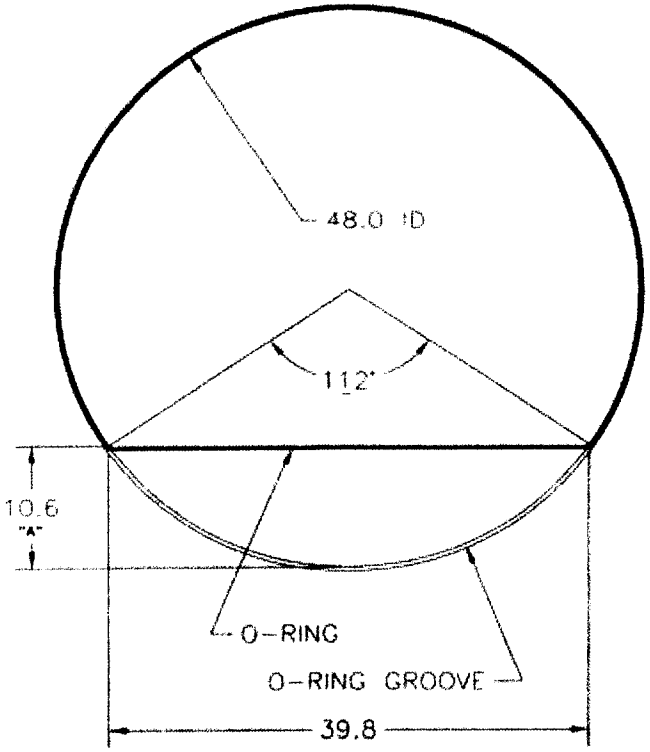

Figure 6: Loctite 515 Application

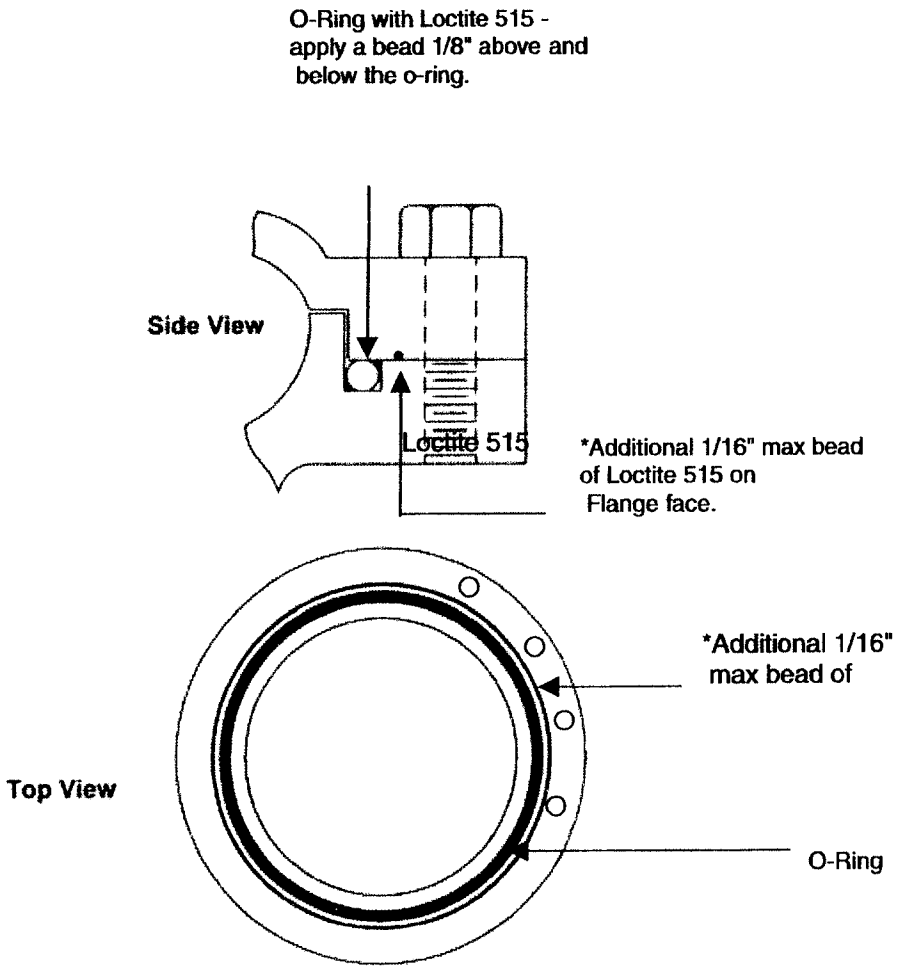

Figure 7: Bolt Connection Modified for Jack-Bolt Hole

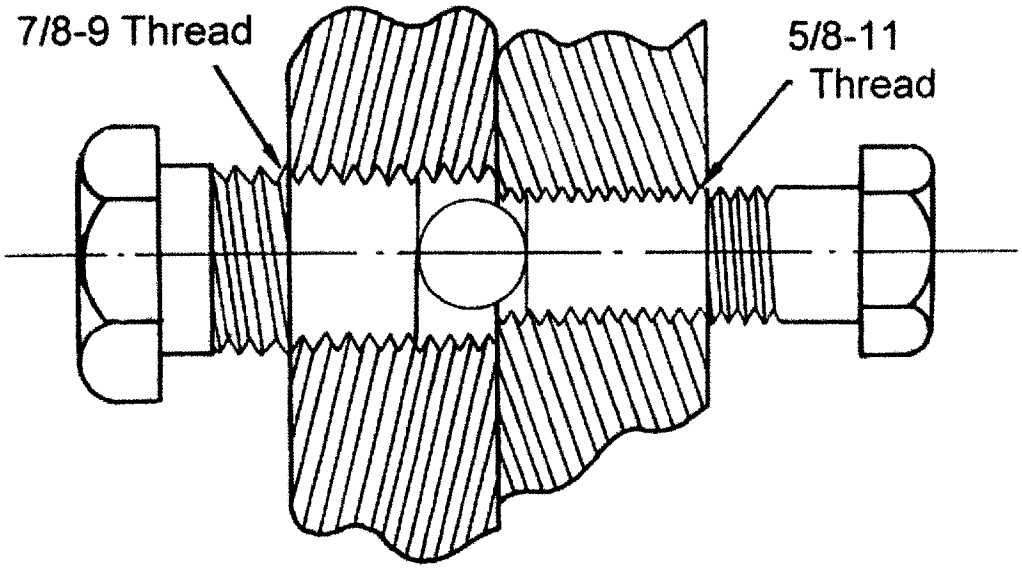

Figure 8: Loctite 515 Application, without O-Ring

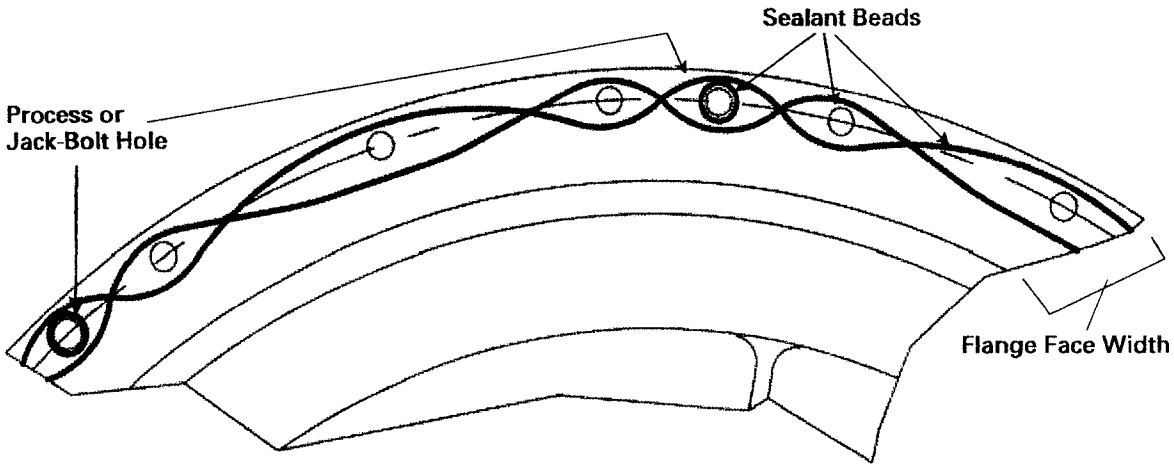

TRANE®
AIR CONDITIONING

LIBRARY	Service Literature
PRODUCT SECTION	Refrigeration
PRODUCT	Centrifugal Liquid Chillers
MODEL	CTV
LITERATURE TYPE	General Service Bulletin
SEQUENCE	67
DATE	11/15/83
FILE NO.	SV-RF-CTV-CTV-SB-67-1183
SUPERSEDES	

GENERAL SERVICE BULLETIN

ORDERING NUMBER **CTV-SB-67**

Since the Trane Company has a policy of continuous product improvement, it reserves the right to change specifications and design without notice. The installation and servicing of the equipment referred to in this booklet should be done by qualified, experienced technicians.

SUBJECT: CENTRAVAC® MOTOR CURRENT IMBALANCE

INTRODUCTION:

The purpose of this Service Bulletin is to discuss the causes and effects of CenTraVac motor current imbalance, define imbalance limits and provide troubleshooting methods.

DISCUSSION:

Motor current imbalance causes a general decrease in unit performance, which increases motor heat and reduces motor torque, power factor and motor speed. Motor current imbalance should be avoided as much as possible. A CenTraVac motor which has balanced voltage at the motor terminals should not have significant current imbalance, when measured at the supply leads.

The main cause of unbalanced motor amperage is voltage imbalance. Another cause is winding resistance imbalance, which is very rare due to the stringent specifications employed by the motor manufacturer during the winding and testing of new motors.

The following jobsite conditions can cause voltage variations which result in amperage imbalance:

1. Extreme difference in either line to starter or starter to motor terminal lead lengths.
2. Different conductor sizes between phases.
3. Unequal phase representation of conductors in a conduit. This will also cause excessive conductor temperatures, due to unbalanced magnetic flux.
4. Unbalanced single phase loads within the customer or power company distribution system.
5. Loose starter and/or motor terminal stud connections.

Motor Amperage And Voltage Imbalance

The following formula may be used to convert voltage and current readings taken on a motor, to a percentage unbalance.

* THE TRANE COMPANY 1983
COMMERCIAL SYSTEMS GROUP
LA CROSSE, WISCONSIN 54601-7599

For example, on a 208-volt system, the readings at the motor terminals are 219, 213 and 220 volts. To find the percentage of imbalance, use the following formula:

$$\frac{219 + 213 + 222}{3} = 218 \text{ (average)}$$

$$\frac{(218 - 213)}{218} \times 100\% = 2.29\% \text{ imbalance}$$

Use Chart 2 to obtain a derating factor of 0.93. The unit safety settings (overloads, etc.) which are based on nameplate RLA, should be set for 0.93 x RLA due to the voltage imbalance of 2.29 percent.

If there is a current imbalance with no measureable voltage imbalance, the cause (either a motor or line problem) must be determined. This can be done by rotating the motor leads to find out if the current imbalance stays with one particular motor winding or if it follows one set of phase leads as the wires are rotated. The motor should be operated only long enough to obtain current measurements. Since some motors have uni-directional bearings, rotate the motor leads twice to keep the proper motor rotation.

Example: The following current measurements were taken from a unit:

Line Lead Numbers	1	2	3
Line Phase Designation	A	B	C
Current Measurement	200	182	208

Using the formula, there is a current imbalance of 5.8 percent. This would be an excessive imbalance for a motor running, with balanced voltage near its full load current.

If the voltage imbalance on the system is negligible, switch two sets of leads around. This applies the phase voltages across different motor windings as shown in the following example:

Line Lead Numbers	1	2	3
Line Phase Designation	B	A	C
Current Measurement	155	148	165

The readings taken before and after rotating the leads shows that the current imbalance follows the incoming lead change. The "C" phase is high and the "A" phase is low, which indicates that incoming power is causing the current imbalance. If voltage imbalance is not the cause, it could be the result of unbalanced impedance or resistance somewhere in the power system. Contact the local power company or correct the problem.

If the current imbalance remained with the motor phases (high current on 3 and 6 windings), contact the La Crosse Service Department with complete motor nameplate information.

TRANE

General Service Bulletin

CTV-SB-74

Library	Service Literature
Product Section	Refrigeration
Product	Centrifugal Liquid Chillers
Model	CTV
Literature Type	General Service Bulletin
Sequence	74
Date	10/25/85
File No.	SV-RF-CTV-CTV-SB-74-1085
Supersedes	

SUBJECT: INSTALLATION OF THE DISTRIBUTION FAULT AUTOMATIC RESET OPTION USED ON CENTRIFUGAL UNITS

INTRODUCTION:

This service bulletin provides instructions for installing a distribution fault automatic reset option on centrifugal units that use the Cutler Hammer solid state overload. This option is designed to automatically restart the unit after line power has been restored following a power loss.

Also discussed is a possible nuisance condition with the timing relationship between the Model CVHE oil pump, the anti-recycle timer, and the distribution fault timing.

DISCUSSION:

This section explains the function of the standard distribution fault option and the need for automatic reset.

A distribution fault is defined as a loss of three-phase line voltage due to a distribution system failure. When a power failure occurs during unit operation, the solid state overload senses the immediate drop in line current while the starter remains energized. The overload responds by tripping the distribution fault breaker to stop unit operation. The breaker must be manually reset to restart the unit. Since some buildings require continuous cooling, it is not practical to manually reset the breaker every time the power is interrupted. To eliminate the manual reset, an automatic reset module can be installed to restart the unit within two minutes after the main supply power is restored.

Since The Trane Company has a policy of continuous product improvement, it reserves the right to change specifications and design without notice. The installation and servicing of the equipment referred to in this booklet should be done by qualified, experienced technicians.

Manual Reset Operation

As soon as line voltage is lost, a trigger voltage generated by the solid state overload (A1) is applied to Terminal 8 of the reset control. This 28 VDC signal causes the normally closed TR contacts (Terminals 4 to 5 and 6 to 7 of K30) to open. When these contacts open, the unit shuts down. Two minutes after the trigger voltage has disappeared and line voltage has been restored, the TR contacts will reclose, allowing restart of the unit, provided the 30-minute anti-recycle timer has timed out.

Simultaneously with the generation of the trigger signal, the CR contacts will close, applying power to Terminal 3 which activates a pilot light. This CR is a latching relay which means that the pilot light will remain energized as long as the 115 volt supply power is on. Closure of the push button contacts will reset this CR circuit and extinguish the pilot light. The push button may have to remain depressed for two or three seconds to allow the capacitor in the latching circuit to completely discharge. See Figure 1.

Figure 1
Automatic Reset Control
Wiring Connections

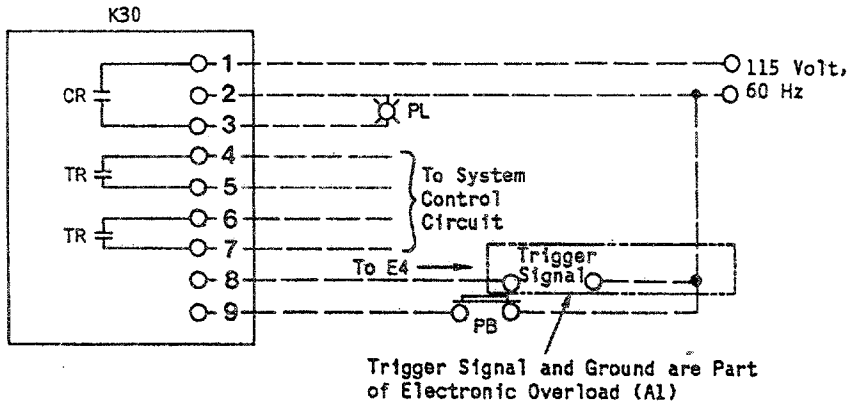

AUTOMATIC RESET INSTALLATION:

To install the automatic reset option, use the following procedure:

CVHE Control System

1. Remove the jumper from Terminals 9 and 10 of the unit control panel.
2. Connect the leads from Terminals 6 and 7 of the automatic reset control (K30) to Terminals 9 and 10. See Figure 2.
3. Disconnect wires 121, 122, 132 and 133 from the distribution fault circuit breaker (CB15) which is mounted on the starter panel door.
4. Remove CB15 from the starter panel door.

The Trane Company
La Crosse, Wisconsin 54601-7599
Printed in U.S.A.

©American Standard Inc. 1985

Figure 2
Typical Starter
Schematic Diagram

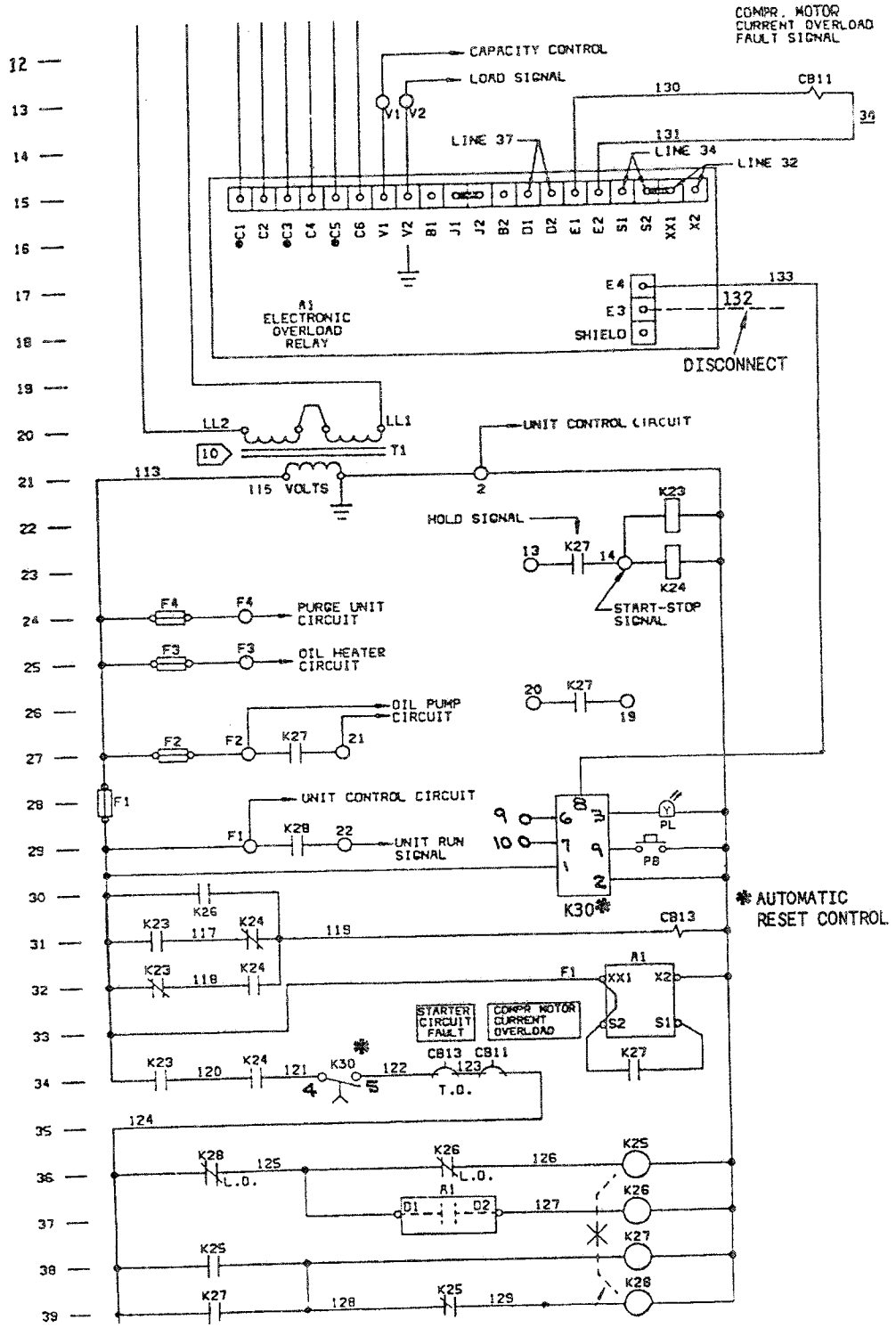

5. Mount the automatic reset control (K30) in an easily accessible location inside of the starter panel.

   To install the automatic reset control, two 3/16-inch diameter holes must be drilled as shown in Figure 3. Mount the control using two #8-32 screws with washers and nuts.

6. The push button pilot light assembly (PB/PL) should be mounted in the location that was occupied by CB15. A hole must be cut in the panel as shown in Figure 4. A ring is provided for mounting the assembly to the starter panel door.

   Figure 5 illustrates the push button pilot light assembly and Figure 6 shows the wiring connections for the assembly.

7. Wire the automatic reset control according to the schematic diagrams shown in Figures 2 and 7. Wires 121 and 133 that were removed from CB15 can be reused. Connect wire 121 to K30 (Terminal 4), wire 122 to K30 (Terminal 5) and wire 133 to K30 (Terminal 8). Additional 16 gauge wire may be required. Remove or insulate wire 132.

Figure 3
Automatic Reset Control
Mounting Detail

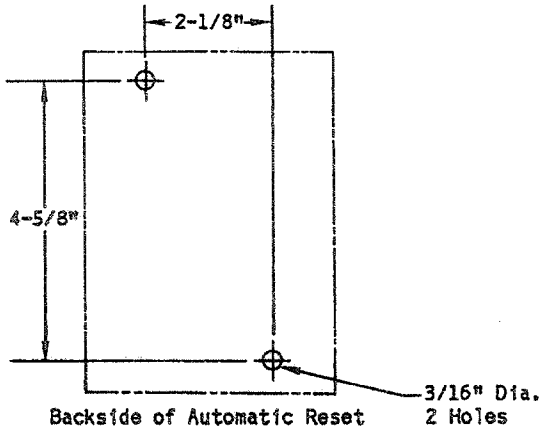

Figure 4
Hole for Mounting Push Button
Pilot Light Assembly

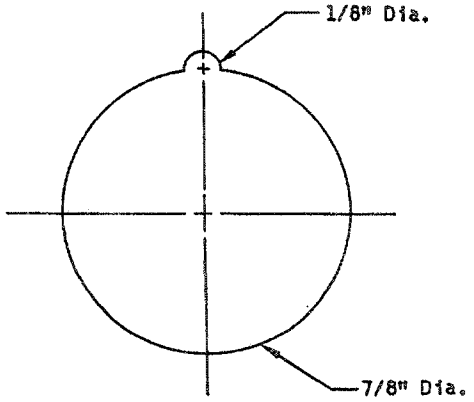

Figure 5
Push Button Pilot
Light Assembly

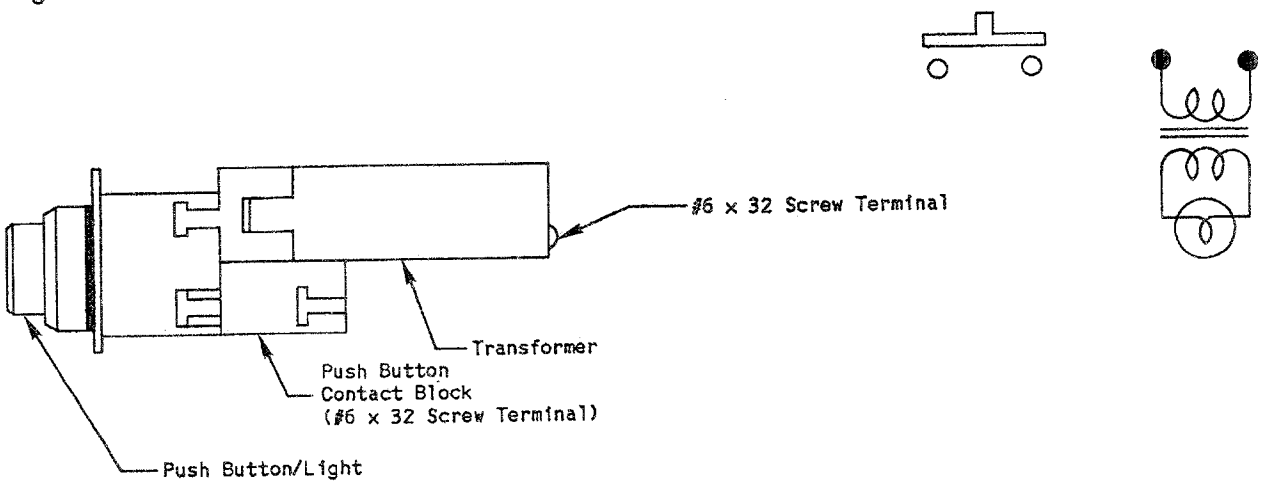

Figure 6
Wiring for Push Button
Pilot Light Assembly

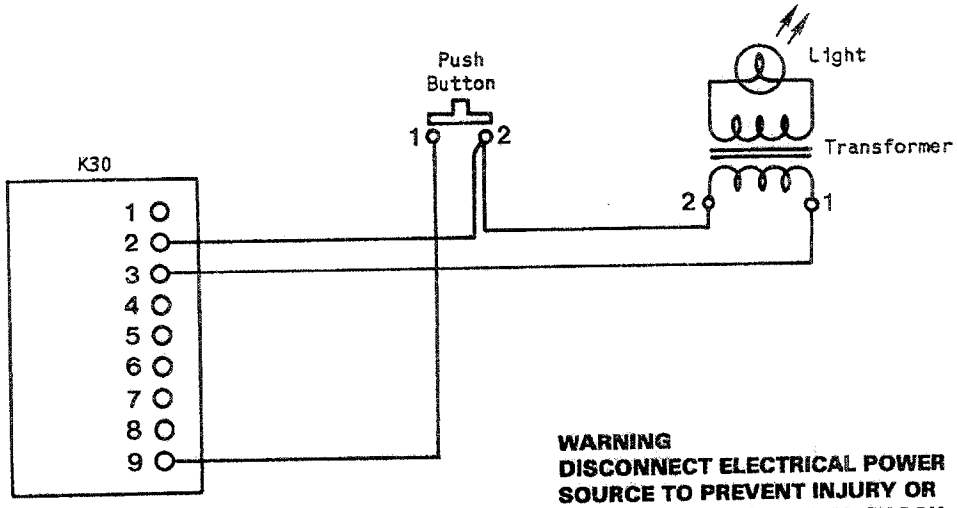

WARNING
DISCONNECT ELECTRICAL POWER SOURCE TO PREVENT INJURY OR DEATH FROM ELECTRICAL SHOCK

CAUTION
Use copper conductors only to prevent equipment damage

Figure 7
Automatic Reset Control
Schematic Diagram

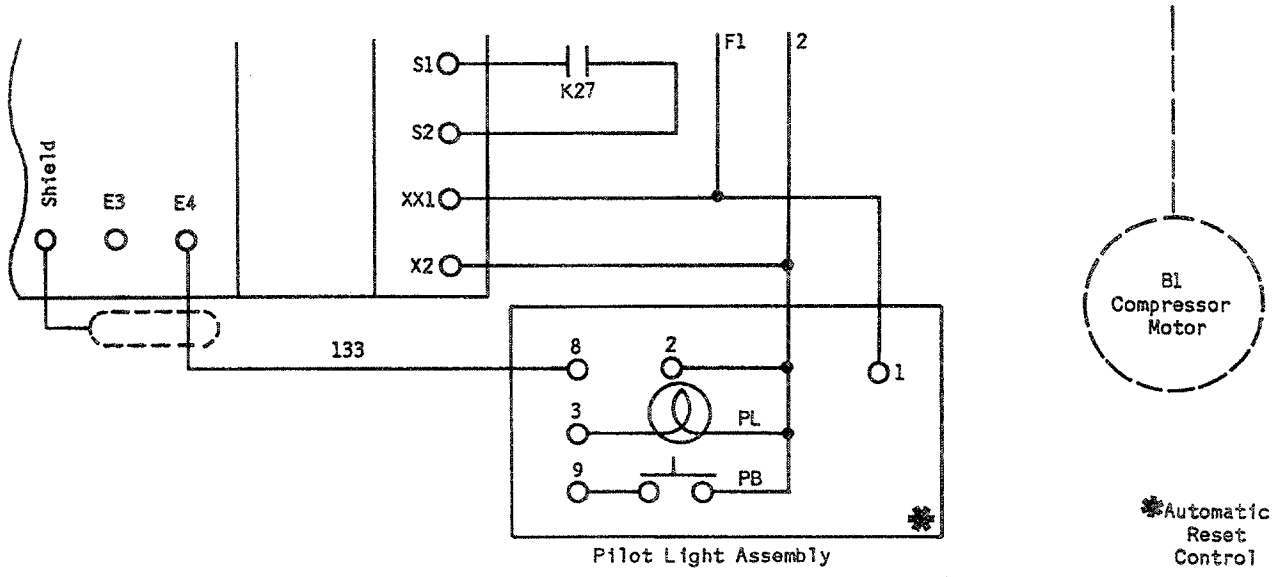

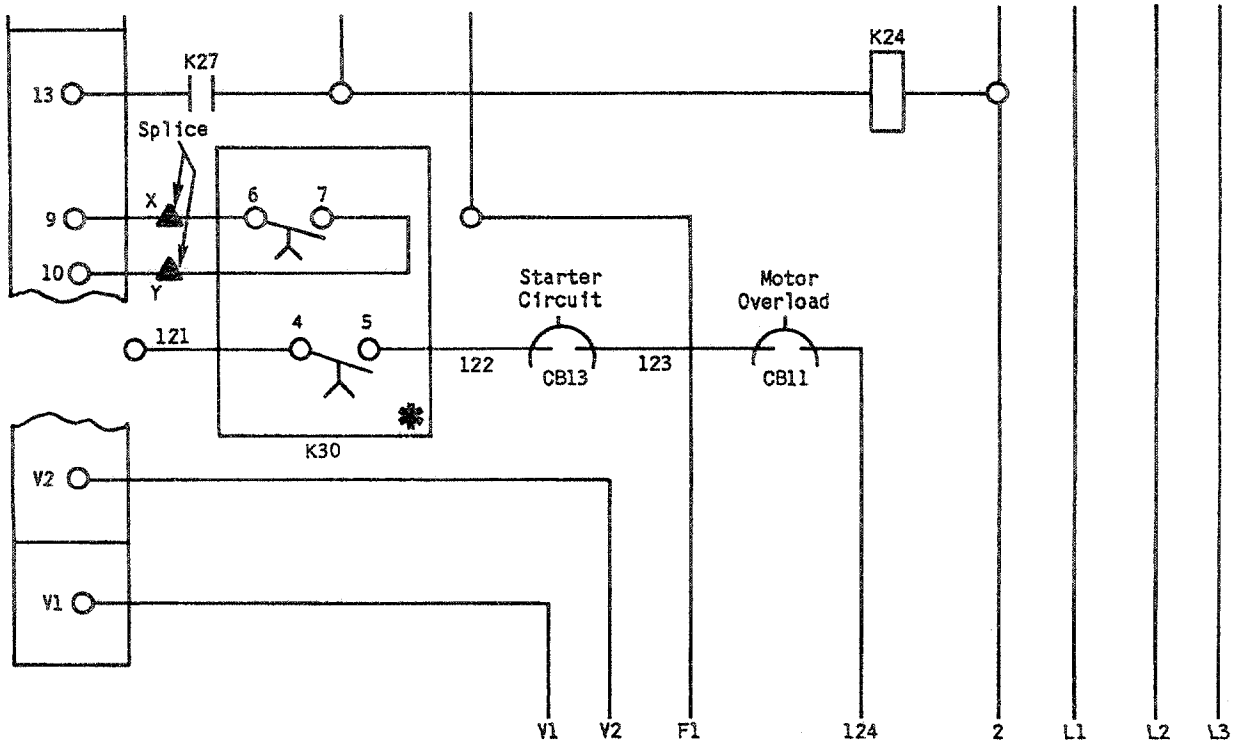

WARNING
DISCONNECT ELECTRICAL POWER SOURCE TO PREVENT INJURY OR DEATH FROM ELECTRICAL SHOCK

CAUTION
Use copper conductors only to prevent equipment damage

"A" and "B" Design Motor/Starter Protection System (MSPS)

1. Mount the automatic reset control (K30) in the upper right-hand corner of the MSPS. The mounting holes are pre-drilled on the "B" design MSPS.

2. Remove the knockout in the MSPS panel door and install the pilot light and push button switch. When the installation is complete, this light will indicate that automatic reset has occurred.

3. Run the two wires from the pilot light to terminals 2 and 3 of the automatic reset control.

4. Run one wire from the push button to the ground side of the pilot light. Run a second wire from the push button to terminal 9 on the automatic reset control.

5. Remove the jumper between terminals 2 and 2A on the MSPS. Run wires from terminals 2 and 2A to terminals 6 and 7 respectively on K30.

6. Disconnect the shielded wires E3 and E4 from the distribution fault circuit breaker (CB14). Reconnect wire E4 to terminal 8 of the automatic reset control (K30). Wire E3 is not needed, so it should be well insulated and tucked out of the way.

7. Run a 120 volt wire from terminal XX1 of the MSPS to terminal 1 of the automatic reset control.

8. Connect terminal 2 of the automatic reset control to terminal X2 of the MSPS.

Terminals 4 and 5 of the automatic reset control are not used. Refer to Figure 1 for wiring details.

Nuisance Tripping of the Low Oil Pressure Fault Indicator

Nuisance tripping of the low oil pressure fault indicator can occur due to improper timing between the automatic reset control, the anti-recycle timer and the oil pump timer of Model CVHE units. This condition can occur when unit attempts to restart after a distribution fault has occurred. The automatic restart control allows for a two minute delay after power has been restored, during which time the oil pump timer is in the post-lube timing cycle. If the anti-recycle timer has timed out, it will begin its normal timing cycle after the two minute lockout cycle of the automatic reset control. In some cases, the post-lube timing cycle of the oil pump timer is completed before the anti-recycle timer can initiate a restart. As the oil pump timer recycles, it interrupts the low oil fault indicator.

To insure that the automatic reset control does not interfere with the timing of the oil pump, the timing of the automatic reset control should be changed from two minutes to thirty seconds, which allows the start signal to be received before the oil pump timer has timed out.

To change the timing of the automatic reset control (Figure 8) to thirty seconds, remove the four cover screws and lift out the panel. The control components are located on the back side of the panel. Remove the resistor shown in Figure 9 and replace it with a 1/2-watt, 120K ohm resistor.

Figure 8
Automatic Reset Control

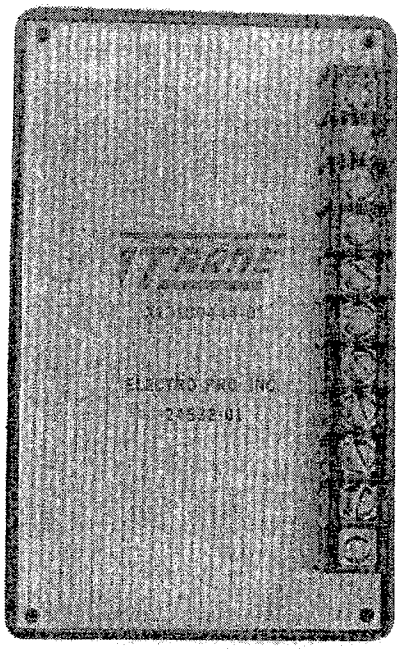

Figure 9
Automatic Reset Control
Replacement Resistor Location

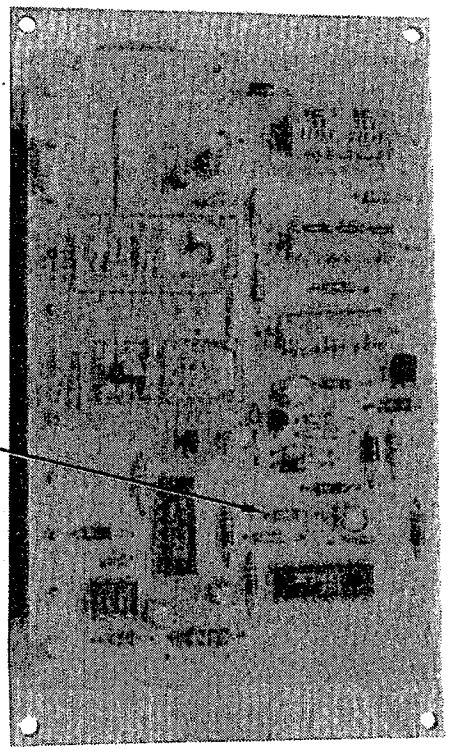

TRANE™

General Service Bulletin

CTV-SB-75B

Library	Service Literature
Product Section	Refrigeration
Product	Centrifugal Liquid Chillers
Model	CTV
Literature Type	General Service Bulletin
Sequence	75B
Date	1/16/87
File No.	SV-RF-CTV-CTV-SB-75B-187
Supersedes	CTV-SB-75A (6/86)

Literature Changes:

Added clarification that this bulletin only applies to "Version 1" and "Version 2" of the Cutler-Hammer SSOL.

Subject: CUTLER-HAMMER SOLID-STATE OVERLOAD (SSOL) UPGRADE

Introduction:

This service bulletin outlines several recommended changes and additions to "Version 1" and "Version 2" of the Cutler-Hammer solid-state overload ("SSOL"; Trane part no. RLY-765). Built from 1981 through December 1986, the affected SSOLs were used in CVHE, CVHB, CVAC and MSPS retrofit kit applications.

Note: By March 1st, 1987, 4 different versions of the Cutler-Hammer SSOL (electrically designated as "A1") will be available in the field. However, **only "Version 1" and "Version 2" are affected by the upgrade described in this bulletin since these improvements are completed by the factory on "Version 3" and "Version 4" of the SSOL!** To distinguish one version of the SSOL from another, look for the following identifying characteristics:

a. "Version 1". The original—and most familiar—version of the Cutler-Hammer SSOL was introduced in 1981 and manufactured until September 1986.

b. "Version 2". Built from September 1986 through December 1986, this variation of the SSOL is most readily identified by the "REV A" that appears on the front cover of the module. It can also be distinguished from Version 1 by comparing the p.c. board assemblies: Version 2 does not include the 50/60-Hz frequency adjustment switch, and all of the IC chips are soldered into place.

c. "Version 3". Identified by a "REV B" on the module's front cover, this SSOL variation is scheduled for production from January 1987 until March 1987, and includes these modifications: removal of the locked rotor potentiometer; a different transformer; removal of the J1-J2 jumper; and factory installation of the "new style" transition relay, MOV, capacitor and surge suppressor described in this bulletin.

d. "Version 4." Scheduled for initial production in March 1987, Version 4 of the SSOL will be known as the "AG-5". In addition to all of the modifications described for Version 3, the AG-5 includes a redesigned p.c. board. You will also notice that the terminal strip and acceleration time DIP switches are relocated to the outside of the SSOL module.

Since The Trane Company has a policy of continuous product improvement, it reserves the right to change specifications and design without notice. The installation and servicing of the equipment referred to in this booklet should be done by qualified, experienced technicians.

Discussion:

Testing and evaluation of "Versions 1 and 2" of the Cutler-Hammer solid-state overload module revealed areas where improvements can be made to increase reliability. The following sections discuss each of these areas in detail.

1. Intermittent Transition

The plug-in style transition relay originally provided in the overload module was an American Zettler Model AZ420-70-4HUS, while an AMF Potter-Brumfield Model R10-E1-X2 replacement relay was used for La Crosse service stock. Both of these relays have contacts made from a cadmium-oxide/silver-type material.

Cycle testing has shown that intermittent closures occasionally occur as a result of cadmium build-up between the surfaces of the relay contacts. A material specification change was made that requires the use of all-silver contacts in the transition relay.

2. Nuisance Tripping Due to Current Imbalance

The SSOL module senses the 3 current phases of the motor and converts them to a proportional DC voltage output at Terminals V1-V2. The resulting VDC signal is then used by the capacity control module to current-limit the chiller. When a significant amount of current imbalance exists in the system, the Cutler-Hammer SSOL may trip on the highest of the 3 current legs while the capacity control module is trying to current-limit based on the average. This type of nuisance trip only occurs when the unit's running load current is near 100%.

Installation of a capacitor wired in parallel with the current calibrator (Terminals B1-B2) in the SSOL will eliminate these nuisance trips.

3. Electrical Component Failures Due to Voltage Transients

High voltage spikes in the 120 VAC control circuit can cause SSOL module failure. This particular problem was discussed in Service Bulletin CVHE-SB-12A, which recommended field installation of a surge suppression device (metal oxide varistor, or "MOV") in the control circuit to protect the 120 VAC input portion of the overload module.

Further inspection of failed overload modules also verified that voltage transients can be introduced into the low voltage circuit (V1-V2) and cause the failure of operational amplifier Z1. This type of failure is usually the result of improper wiring in the V1-V2 circuit between the SSOL in the starter panel and the capacity control module in the chiller control panel. Remember that interconnecting wiring for V1-V2 must be 18 AWG, shielded wire. When properly installed, the shielding is only grounded at the starter panel.

Caution: Voltage from external sources may be induced into the V1-V2 circuit and damage the SSOL module if the wiring is improperly grounded.

Transient voltage suppression can be obtained with the addition of a bipolar surge suppressor—or "TRANS ZORB"—across the SSOL's V1-V2 terminals. The addition of this device is not only recommended for all installations without proper shielding, but can also be added to any installation with shielded wire for increased voltage-transient protection.

Note: Shielded cable was not used in some Trane-built, unit-mounted starters manufactured between January 1985 and January 1986. Be sure to review all succeeding installations of Model CVHE and CVHB units with free-standing starters to verify that the V1-V2 wiring conforms to the specifications outlined in this bulletin.

4. Electrostatic Discharge (ESD)

Because of the "metal oxide semiconductor" (MOS) component technology used in the construction of the SSOL module, the electronic components on the p.c. board are susceptible to damage caused by electrostatic—or "static" —discharge. Static discharges are most often transmitted by a person touching the SSOL's electronic components or the p.c. board itself.

To prevent electrostatic discharges, always wear static control wrist straps (i.e., 3M Model 2071 wrist straps, or equivalent) whenever working inside the overload module.

Corrective Action:

When service is required on a unit with "Version 1" or "Version 2" of a Cutler-Hammer SSOL, be sure to complete the modifications described below.

1. **Intermittent Transition.** Install a new transition relay (RLY-849) in place of the existing relay.

After February 1st, 1986, all relays ordered from La Crosse service stock are the new style. The model number of the new-style transition relay is R10-E1-Y2 (Potter-Brumfield). ("Y2" indicates that the relay contact material is all silver, rather than cadmium-oxide/silver.) Be sure to check your office stock of RLY-849 to ensure that all relays are the new style.

2. **Nuisance Tripping Due to Current Imbalance.** Install an electrolytic capacitor (22 to 26 MFD, rated for 25 to 100 VDC) across SSOL Terminals B1-B2; Trane part no. CPT-335 is recommended for this application.

Wire this capacitor in parallel with the existing current calibrator in the SSOL module. Since CPT-335 is nonpolarized, it can be installed without regard to the polarity of Terminals B1-B2. However, if a locally-supplied capacitor is used, be sure to install it so that the positive (+) side is on Terminal B1 and the negative (-) side is on Terminal B2.

3. **Electrical Component Failures Due to Voltage Transients.** Install a metal oxide varistor—Trane part no. SPS-11—in the unit control panel if one is not already there; refer to Service Bulletin CVHE-SB-12A for installation details.

Then, wire a "TRANS ZORB"—Trane part no. SPS-14—between SSOL Terminals V1-V2 to protect the Z1 output operational amplifier in the low voltage circuit.

4. **Electrostatic Discharge.** Whenever the cover of the SSOL module is removed for service, static discharge must be avoided! Wear static-control wrist straps to eliminate any possibility of electrostatic discharge.

For further information on this product or other Trane products, refer to the "Trane Service Literature Catalog", ordering number IDX-IOM-1. This catalog contains listings and prices for all service literature sold by Trane. The catalog may be ordered by sending a $20.00 check to: The Trane Company, Service Literature Sales, 3600 Pammel Creek Road, La Crosse, WI 54601.

PRINTED BY PRODUCTION SERVICES — LA CROSSE BB/LW

TRANE™

General Service Bulletin

CTV-SB-76

Library	Service Literature
Product Section	Refrigeration
Product	Centrifugal Liquid Chillers
Model	CTV
Literature Type	General Service Bulletin
Sequence	76
Date	10/14/86
File No.	SV-RF-CTV-CTV-SB-76-1086
Supersedes	

SUBJECT: NUISANCE "DISTRIBUTION FAULT" TRIPS FOLLOWING UNIT SHUTDOWN

INTRODUCTION:

Centrifugal units equipped with Cutler-Hammer solid-state overloads (SSOLs) may experience nuisance "distribution fault" trips when the starter de-energizes during the normal shutdown sequence. This service bulletin explains why these nuisance trips occur, and what can be done to prevent them.

DISCUSSION:

To better understand why nuisance "distribution fault" trips occur, let's first review what a distribution fault is. "Distribution fault" is defined as the total loss of line voltage for a period lasting less than 60 electrical cycles. In this situation, the compressor motor remains on-line and acts as a generator; often, the motor is capable of generating enough voltage to allow the control circuit to remain energized for up to 1 second (i.e., 60 electrical cycles).

By contrast, during a normal shutdown (i.e., when the ON/OFF switch is adjusted to the OFF position), the compressor motor is instantly disconnected from the line. This simultaneously de-energizes the control circuit, dropping out all of its relays and contactors--and effectively eliminating the likelihood of a distribution fault trip.

When a unit is protected by the Cutler-Hammer SSOL motor/starter protection system, existence of a distribution fault condition is detected within 1-1/2 electrical cycles; within 6 electrical cycles, the motor is off-line. SSOL recognition of a distribution fault is based on the status of the S1-S2 circuit (auxiliary on 1M) and motor amp draw: If the S1-S2 circuit remains closed while line current is less than 15% of RLA, a distribution fault exists.

In star-delta starter applications, this situation can occur if the 2M (K28) contactor opens, interrupting current to the motor, while a sluggish 1M (K27) contactor--or unresponsive auxiliary 1M contacts in the S1-S2 circuit--remains closed. As a result, the SSOL interprets what should be a normal, scheduled shutdown (i.e., one initiated with the unit ON/OFF switch) as a distribution fault, and trips the distribution fault indicator.

Since The Trane Company has a policy of continuous product improvement, it reserves the right to change specifications and design without notice. The installation and servicing of the equipment referred to in this booklet should be done by qualified, experienced technicians.

CORRECTIVE ACTION:

Starter vendors interface their auxiliary contacts with the main contactor in a variety of ways. Depending on the method used, some auxiliary contacts can be adjusted to improve their responsiveness, while others are more easily changed out. In all situations where nuisance distribution fault trips are a problem, however, be sure to determine whether the presence of debris or corrosion is responsible for the sluggish reaction of the 1M (K27) contactor (or auxiliary contacts).

In the event that the 1M (K27) contactor is found to be in good condition and neither adjustment nor replacement of the auxiliary contactor contacts eliminates the nuisance trip problem, wire a single-pole, single-throw relay into the distribution fault circuit. The addition of this relay ensures that the S1-S2 circuit opens as soon as the coil of the 1M (K27) contactor is de-energized (even though the auxiliary 1M contacts may still respond slowly).

Examples A and B illustrate two alternative methods for adding the SPST relay to the distribution fault circuit.

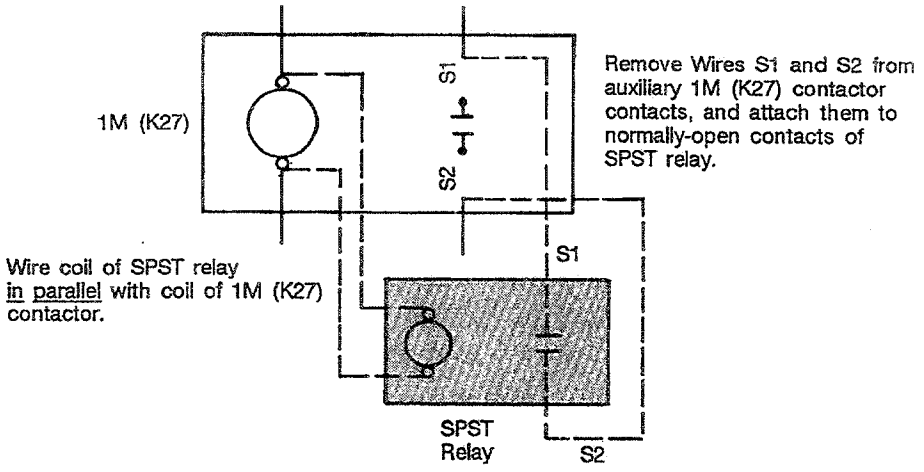

Example A

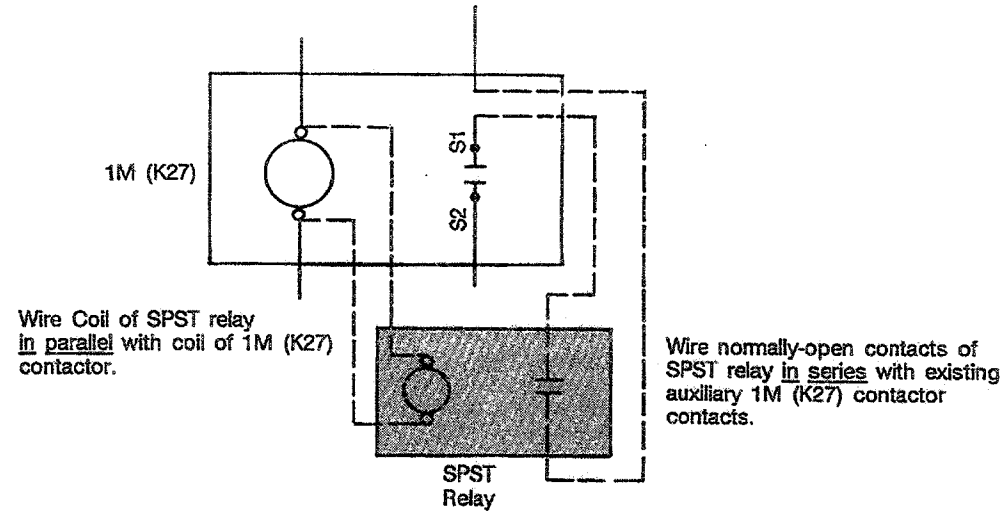

Example B

The Trane Company
La Crosse, Wisconsin 54601-7599
Printed in U.S.A.

©American Standard Inc. 1986

PRINTED BY PRODUCTION SERVICES — LA CROSSE

BB /LW

TRANE™

General Service Bulletin

CTV-SB-77

Library	**Service Literature**
Product Section	**Refrigeration**
Product	**Centrifugal Liquid Chillers**
Model	**CTV**
Literature Type	**General Service Bulletin**
Sequence	**77**
Date	**2/6/87**
File No.	**SV-RF-CTV-CTV-SB-77-287**
Supersedes	

Subject: CUTLER-HAMMER SOLID-STATE OVERLOAD (SSOL; "A1") OPERATION, CALIBRATION AND TROUBLESHOOTING

Introduction:

This service bulletin describes the operation of the Cutler-Hammer solid-state overload module (electrically designated as "A1"), as well as appropriate procedures for SSOL calibration and trouble analysis. This module is provided in all current-production starter panels built to Trane specifications for CVHE and CVHB CenTraVacs (excluding those designed for use with the microcomputer-based UCP695 chiller control system).

It is important to note that by March 1st, 1987 4 different versions of the Cutler-Hammer solid-state overload (electrically designated as "A1") will be available in the field. Identifying characteristics that will enable you to distinguish one version from another are described below.

[ ] **"Version 1".** The original---and most familiar---version of the Cutler-Hammer SSOL was introduced in 1981 and manufactured until September 1986.

[ ] **"Version 2."** Built from September 1986 through December 1986, this variation of the SSOL is most readily identified by the "REV A" that appears on the front cover of the module. It can also be distinguished from Version 1 by comparing the printed circuit (p.c.) board assemblies: Version 2 does not include the 50/60-Hertz frequency adjustment switch, and all of the IC chips are soldered into place.

[ ] **"Version 3."** Identified by a "REV B" on the module's front cover, this SSOL variation is scheduled for production from January 1987 until March 1987, and includes these factory modifications:

a. removal of the locked rotor potentiometer;
b. a different transformer;
c. removal of the J1-J2 jumper;
d. a transition relay (RLY-849) with all-silver contacts; and,
e. factory-installation a metal oxide varistor (SPS-11), an electrolytic capacitor (CPT-335), and a TRANS ZORB surge suppressor (SPS-14). (Because these components are now installed at the factory, service bulletin CTV-SB-75---which describes field installation of these components---is not applicable.)

[ ] **"Version 4."** Scheduled for initial production in March 1987, Version 4 of the SSOL will be known as the "AG-5". In addition to all of the modifications described for Version 3, the AG-5 also includes these changes:

a. a redesigned p.c. board; and,
b. relocation of the terminal strip and acceleration time DIP switch to the outside of the SSOL module.

Since The Trane Company has a policy of continuous product improvement, it reserves the right to change specifications and design without notice. The installation and servicing of the equipment referred to in this booklet should be done by qualified, experienced technicians.

Discussion:

Following is a list of the SSOL's operational functions and features:

1. provides precise compressor motor overload protection;
2. protects against excessive locked rotor (inrush) current draw;
3. limits the length of time that inrush current is drawn;
4. protects the chiller from damage that could be caused by an electrical distribution fault;
5. initiates starter transition when compressor motor current drops to 85% of RLA;
6. provides a DC voltage signal that is proportional to the load;
7. can be adjusted to compensate for high line voltage; and,
8. can be adjusted for either 50- or 60-Hertz operation.

SSOL Calibration Procedure

WARNING: To prevent injury or death due to electrical shock, lock unit disconnect switch open before servicing SSOL module (A1).

The adjustments and calibration procedures itemized below---and detailed on the following pages of this bulletin---must be completed before the chiller is started. Remember to use a grounding strap whenever working on a SSOL module!

1. Adjust line frequency (SSOL Version 1 only).
2. Calibrate the motor overload resistor.
3. Adjust locked rotor current (SSOL Versions 1 and 2 only).
4. Set the maximum motor acceleration time.
5. Adjust for high-voltage compensation.

If the unit is equipped with the distribution fault function, the small circuit board mounted in the center of the SSOL must be tilted outward to calibrate the module. To move this circuit board out of the way, gently pull on the 2 black tabs located at the top of the board, and tilt it down on its hinges.

Note: To verify that the existing---or new---SSOL is operational, use Trane service tool TOL-90 to perform a functional checkout of the module. TOL-90 is available from Trane ServiceFirst, and is provided with operating instructions (TOL-OM-1). If you are using TOL-90 to test the module's integrity while it is still mounted in the starter panel:

a. remove the high voltage power supply from the starter panel;
b. connect a separate 115 VAC source to power up the SSOL; and,
c. disconnect the fuses on the primary side of the transformer.

Line Frequency Adjustment (SSOL Version 1 Only)

"Version 1" of the Cutler-Hammer SSOL module can be adapted to operate in either 50- or 60-Hertz electrical systems. To select the appropriate line frequency for a specific application:

1. Determine the line frequency of the installation. (Remember that all U.S. installations are 60 Hz.)

2. Position the SSOL's frequency adjustment switch at the appropriate setting. Refer to Figure 1 for the location of this switch on the SSOL's p.c. board; Figure 2 indicates the appropriate switch position for both 50 Hz and 60 Hz settings.

3. Check the appropriate box on the SSOL's nameplate (Figure 3) to record the line frequency switch setting selected in Step 2.

Note: Versions 2, 3 and 4 of the SSOL can also be used in 50-cycle applications. Though a specific line frequency adjustment is not necessary for any of these SSOL versions, the maximum acceleration time setting must be readjusted by multiplying the 60 Hz maximum acceleration time setting by "5/6". (For instance, if the maximum acceleration time setting is 30 seconds for a 60 Hz application, the corresponding 50 Hz setting is "30 x 5/6", or 25 seconds.)

The Trane Company
La Crosse, Wisconsin 54601-7599
Printed in U.S.A.

©American Standard Inc. 1987

Figure 1
Solid-State Overload Module (SSOL)

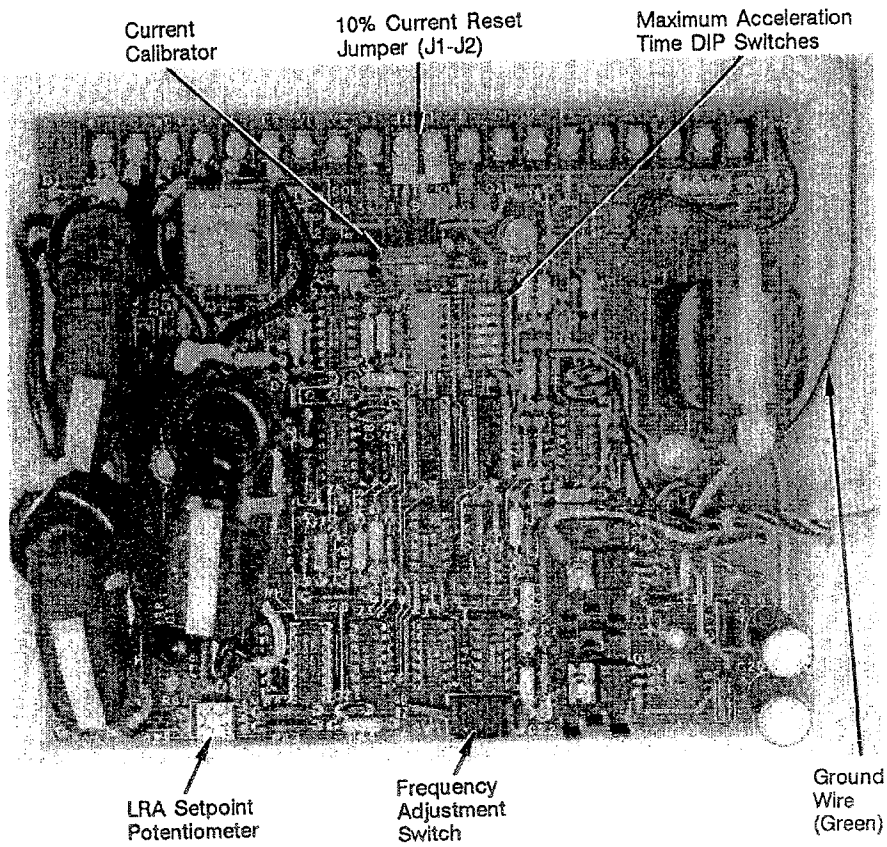

Figure 2
Line Frequency Adjustment Switch Positions

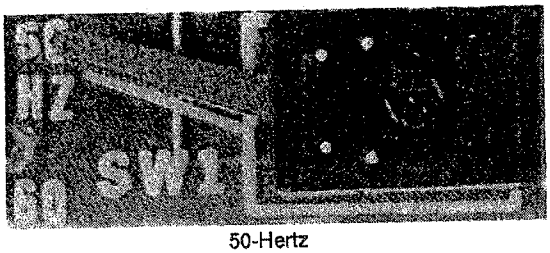

50-Hertz Setting

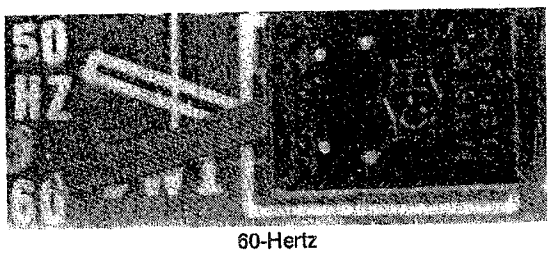

60-Hertz Setting

Figure 3
SSOL Nameplate

TRANE NO.	
CALIBRATOR NO.	
CALIBRATOR OHMS	C.T. RATIO /5
MOTOR LRA _____ RATIO ____ % MOTOR RLA _____	
L.R. TRIP TIME SEC.	50☐ 60☐ HZ

Compressor Motor Overload Setup (SSOL Verions 1, 2, 3 and 4)

Compressor motor overload calibration is accomplished by adjusting the resistance of the current calibrator (shown in Figure 1). When the current calibrator is adjusted properly, the SSOL will trip at 107% of the compressor motor's RLA value. (This particular "trip" point prevents nuisance full-load lockouts, while still protecting the compressor motor from potentially damaging overloads.)

Follow the instructions outlined below to correctly set the SSOL's current calibrator:

1. Determine the chiller's RLA value and current transformer ratio; be sure to consider the conditions described below when arriving at these values:

a. If the job site voltage is equal to--or lower than--the specified voltage rating stamped on the chiller nameplate, base the current calibrator setting on the nameplate RLA value. However, if the actual voltage is higher than the specified voltage, refer to the instructions provided under "High Voltage Compensation" later in this bulletin.

b. If the chiller is equipped with power factor correction capacitors (PFCCs) that are connected to the load side of the overload current transformers, the RLA value shown on the unit nameplate must be recalculated in order to correctly set the current calibrator.

This "adjusted" RLA value is already calculated for those units with factory-installed PFCCs, and it is marked on the cover of the solid-state overload (SSOL).

To determine the "adjusted" RLA value for other units, run the unit at full load; then take amperage readings on the load and line sides of the capacitor terminal points. Multiply the line-to-load-side ratio of these amp readings by the nameplate RLA to arrive at an "adjusted" RLA value.

Example

100 amps = Motor Rating (RLA Value) from Nameplate
84 amps = Line-Side Current Reading
92 amps = Load-Side Current Reading

$$\text{Nameplate RLA} \times \frac{\text{Line-Side Current}}{\text{Load-Side Current}} = \text{"Adjusted" RLA}$$

$$100 \text{ amps} \times \frac{84 \text{ amps}}{92 \text{ amps}} = 91.3, \text{ or } 91 \text{ amps}$$

If the PFCCs are connected on the line side of the SSOL current transformers--or if the capacitor leads are run through the current transformers with the motor leads (Figure 4), do not recalculate compressor RLA; use the RLA value stamped on the chiller nameplate to establish the current calibrator setting.

Note: For additional information and recommendations regarding field additions of power factor correction capacitors, refer to Trane Engineering Bulletin EB-CTV-44. Remember, too, that the PFCCs must be installed on Leads T1, T2 and T3--not on Leads T4, T5 and T6!

Figure 4
Current Transformers

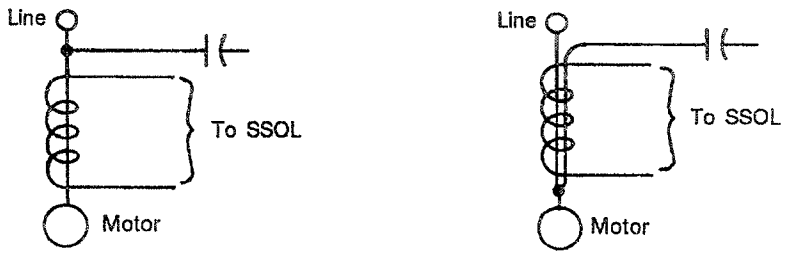

2. Once the appropriate RLA value is determined (Step 1), calculate the rated load secondary current ("Isec") using 1 of the two methods described below. Notice that the calculation method selected---and the resulting Isec value---are dependent on the location of the current transformers (CTs).

a. CTs Monitoring Line Current. If the CTs are located to monitor line current, determine the Isec value by dividing the appropriate RLA value by the CT ratio.

Example
RLA Value = 91 amps
CT Ratio = 100:5 (or 20)

$$\frac{\text{RLA}}{\text{CT Ratio}} = \text{Isec}$$

$$\frac{91 \text{ amps}}{20} = 4.55$$

b. CTs Monitoring Phase Current. If the CTs in a wye-delta starter are positioned to monitor phase current, the Isec value is calculated by dividing the appropriate RLA value by the CT ratio, and then multiplying the result by 0.58.

Example
RLA Value = 91 amps
CT Ratio = 100:5 (or 20)

$$\frac{\text{RLA}}{\text{CT Ratio}} \times 0.58 = \text{Isec}$$

$$\frac{91 \text{ amps}}{20} \times 0.58 = 2.639, \text{ or } 2.64$$

Note: Where donut-type CTs are used, the wires routed through them are sometimes wrapped around and passed through the CTs more than once; this alters the "actual" CT ratio. To determine the CT ratio in this situation, divide the CT ratio by the number of times that the wire passes through the CT; in other words, the "actual" ratio for a 200:5 CT with a wire passed through it twice is 100:5.

3. Using Table 1 and the rated load secondary current ("Isec") value calculated in Step 2, determine the appropriate current calibrator and its potentiometer setting.

For example, if the "Isec" value is 4.55, the correct current calibrator is H818 and the potentiometer should be adjusted to 82.6 ohms; this adjustment will result in an overload trip point that is 107% of the nameplate RLA.

4. To adjust the current calibrator to the setting determined in Step 3, remove it from the SSOL module. Use a digital ohmmeter with a minimum accuracy of 3-1/2 places to obtain the desired resistance setting.

5. Return the current calibrator to the SSOL module. Be sure to record the calibrator number and setting on the SSOL nameplate.

Locked Rotor Current Lockout Adjustment (SSOL Versions 1 and 2 Only)

The SSOL is designed to protect the compressor motor from excessive LRA current draw during start-up by tripping the motor overload circuit breaker any time the set LRA is exceeded. Remember that the LRA current trip point value depends on the type of starter used with the CenTraVac compressor motor. It is set with the "LRA Setpoint" potentiometer found near the lower right-hand corner of the SSOL p.c. board. (See Figure 1.)

To properly set the LRA setpoint potentiometer:

1. Insert a screwdriver in the potentiometer adjusting slot; then turn the pot to the fully-counterclockwise (CCW) stop to establish a reference point.

2. Refer to Figure 5; then rotate the pot clockwise (CW) to the position that corresponds to the type of compressor motor starter used.

Note: The LRA setpoint pot positions illustrated in Figure 5 represent approximate settings for various starter types. To calculate a specific potentiometer setting, see Step 5.

Figure 5
LRA Setpoint Potentiometer Settings for Various Starter Types

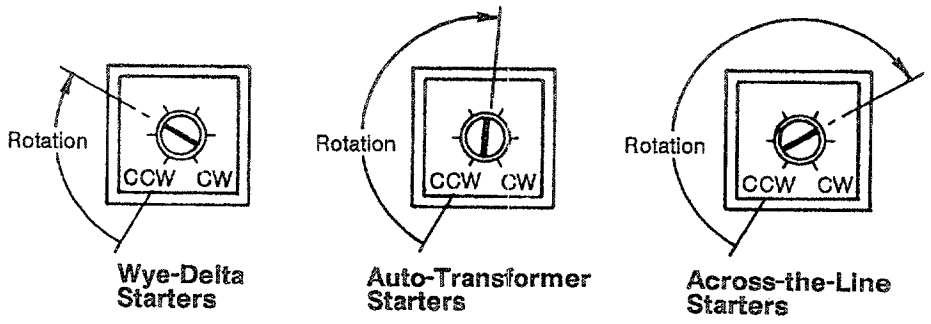

Table 1
Current Calibrator Settings

I.D. No. on Current Calibrator	1sec Ampere Rating Minimum	1sec Ampere Rating Maximum	Current Calibrator "Pot" Setting (Resistance)	I.D. No. on Current Calibrator	1sec Ampere Rating Minimum	1sec Ampere Rating Maximum	Current Calibrator "Pot" Setting (Resistance)
H816	2.01	2.05	185.0 ohms	H818	3.66	3.70	102.0 ohms
	2.06	2.10	180.0 ohms		3.71	3.75	101.0 ohms
	2.11	2.15	176.0 ohms		3.76	3.80	99.2 ohms
	2.16	2.20	172.0 ohms		3.81	3.85	97.9 ohms
	2.21	2.25	168.0 ohms		3.86	3.90	96.6 ohms
	2.26	2.30	165.0 ohms		3.91	3.95	95.4 ohms
	2.31	2.35	161.0 ohms		3.96	4.00	94.2 ohms
	2.36	2.40	158.0 ohms		4.01	4.05	93.0 ohms
	2.41	2.45	155.0 ohms		4.06	4.10	91.8 ohms
	2.46	2.50	151.0 ohms		4.11	4.15	90.7 ohms
H817	2.51	2.55	148.0 ohms		4.16	4.20	89.6 ohms
	2.56	2.60	146.0 ohms		4.21	4.25	88.5 ohms
	2.61	2.65	143.0 ohms		4.26	4.30	87.5 ohms
	2.66	2.70	140.0 ohms		4.31	4.35	86.5 ohms
	2.71	2.75	138.0 ohms		4.36	4.40	85.5 ohms
	2.76	2.80	135.0 ohms		4.41	4.45	84.5 ohms
	2.81	2.85	133.0 ohms		4.46	4.50	83.5 ohms
	2.86	2.90	130.0 ohms		4.51	4.55	82.6 ohms
	2.91	2.95	128.0 ohms		4.56	4.60	81.7 ohms
	2.96	3.00	126.0 ohms		4.61	4.65	80.8 ohms
	3.01	3.05	124.0 ohms		4.66	4.70	79.9 ohms
	3.06	3.10	122.0 ohms		4.71	4.75	79.1 ohms
	3.11	3.15	120.0 ohms		4.76	4.80	78.2 ohms
	3.16	3.20	118.0 ohms		4.81	4.85	77.4 ohms
	3.21	3.25	116.0 ohms		4.86	4.90	76.6 ohms
	3.26	3.30	114.0 ohms		4.91	4.95	75.8 ohms
	3.31	3.35	113.0 ohms		4.96	5.00	75.1 ohms
	3.36	3.40	111.0 ohms				
	3.41	3.45	109.0 ohms				
	3.46	3.50	108.0 ohms				
	3.51	3.55	106.0 ohms				
	3.56	3.60	105.0 ohms				
	3.61	3.65	103.0 ohms				

3. Initiate the chiller start sequence. If the motor overload circuit breaker trips as soon as (within 1 second) the starter energizes, the LRA current trip point may need to be set higher. (This will not harm the operation of the SSOL module or the compressor motor.)

4. Record the LRA and RLA values from the chiller nameplate on the SSOL's nameplate.

5. Use the following procedure to calculate the "RATIO _____%" value; then record this value on the SSOL nameplate.

$$\text{Ratio \%} = \frac{\text{Motor LRA*}}{\text{Motor RLA}} \times 100\% ,$$

*where LRA (locked rotor amperes) is the reduced value determined by starter type. See Table 2.

Example
Motor LRA = 200 amps
Motor RLA = 100 amps

$$\text{Ratio \%} = \frac{200 \text{ amps}}{100 \text{ amps}} \times 100\% = 200\%$$

Maximum Acceleration Time Setup (SSOL Versions 1, 2, 3 and 4)

Designed to limit the time allowed for transition to occur, the SSOL trips---and shuts down the unit---whenever the compressor motor fails to transition within the time period established with maximum acceleration time switches (Figure 1). This prevents the motor from drawing LRA for an excessive period of time which, in turn, prevents the motor from overheating.

To set the maximum acceleration time switches properly:

1. Determine the appropriate maximum acceleration time---between 1 and 63 seconds---for the unit; refer to Table 3 for typical settings by starter type.

Keep in mind that the type of unit and starter, as well as job site conditions, will determine how much the actual maximum acceleration time setting varies from the typical settings shown in Table 3.

2. Locate the maximum acceleration time DIP switches on the SSOL p.c. board; refer to Figures 1 and 6. Notice that each DIP switch represents a specific number of seconds (e.g., DIP switch no. 1 is 32 seconds, no. 2 is 16 seconds, etc.). Determine what DIP switch "seconds" values can be added to yield the maximum acceleration time found in Step 1; then flip these DIP switches to the ON position. (For instance, if the desired maximum acceleration time setting is 27 seconds, flip DIP switch nos. 2, 3, 5 and 6 to ON.)

Note: If none of the DIP switches is set at ON, the unit will not start. (The SSOL will not allow any time for motor acceleration in this situation, so the motor overload circuit breaker trips as soon as a start-up is attempted.)

3. Record the maximum acceleration time setting on the SSOL nameplate.

For 50 Hz Applications w/SSOL Versions 2, 3 or 4. When determining the appropriate maximum acceleration time, remember to compensate for the difference in line frequency. Multiply the appropriate 60 Hz maximum acceleration time by "5/6" to arrive at the proper setting for 50 Hz applications. (For instance, if the maximum acceleration time setting is 30 seconds for a 60 Hz application, the corresponding 50 Hz setting is "30 x 5/6", or 25 seconds.)

Table 2
Starting Characteristics of Various Types of Motor Starters

Starter Type	Starting Characteristics--- % of Rated Value			
	% Tap	Motor Voltage	Motor LRA	Motor Torque
Full-Voltage Type				
Magnetic, Across-the-Line	n/a	100%	100%	100%
Reduced Voltage Types				
Auto-Transformer	80%	80%	64%	64%
	65%	65%	42%	42%
	50%	50%	25%	25%
Primary Reactor	80%	80%	80%	64%
	65%	65%	65%	42%
	50%	50%	50%	25%
Reduced Inrush Types				
Wye-Delta	n/a	100%	33%	33%
Open- or Closed-Transition	n/a	100%	33%	33%

Table 3
Typical Maximum Acceleration Time Settings

Starter Type	Recommended Max. Acceleration Time Setting
Wye-Delta	27 seconds
Auto-Transformer	16 seconds
Across-the-Line	6 seconds

Figure 6
Maximum Acceleration Time DIP Switches

Example
12 seconds = 8 seconds + 4 seconds; therefore, flip DIP switch nos. 3 and 4 to ON.

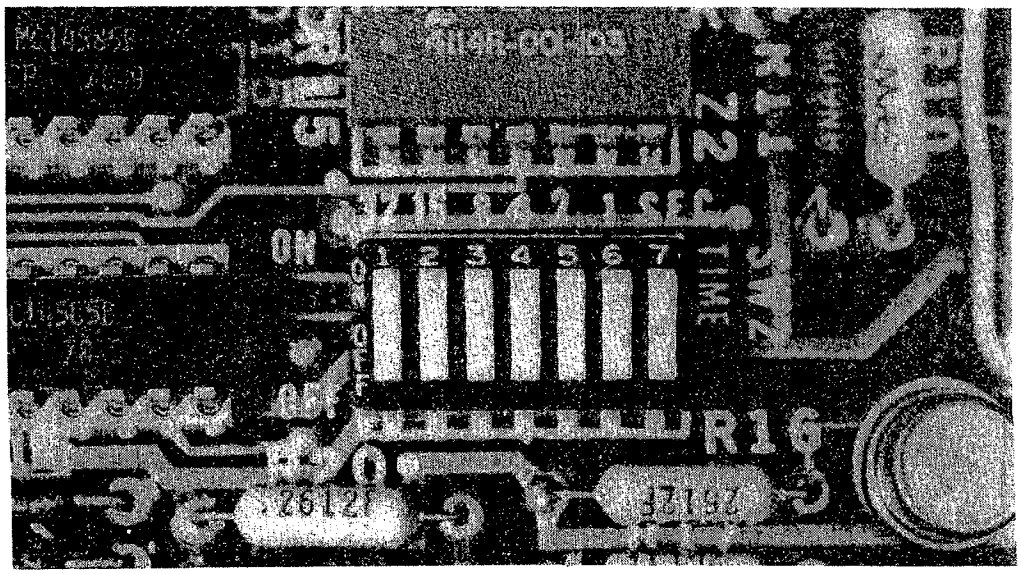

High-Voltage Compensation Adjustment (SSOL Versions 1, 2, 3 and 4)

While the RLA value shown in the chiller nameplate represents the design nominal voltage, actual job-site voltage often varies from this value. Therefore, it is possible that a higher-than-nominal line voltage condition will cause the motor to generate excessive horsepower without exceeding the current draw shown on the nameplate.

To prevent motor overloading resulting from higher-than-rated voltage, recalibrate the SSOL module in 1 of 2 ways:

[ ] SSOL Versions 1 and 2 Only. Remove the 10% current reset jumper from Terminals J1-J2 in the SSOL (Figure 1); removal of this jumper automatically recalibrates the SSOL so that approximately 90% of the motor nameplate current rating is the new "rated" current for that application.

Note: SSOL setup does not change if the J1-J2 jumper is removed since all SSOL functions are automatically recalibrated.

[ ] SSOL Versions 1 thru 4. Reset the current calibrator. To arrive at a new current calibrator setting, multiply the Isec. value (calculated in "Compressor Motor Overload Setup") by the ratio of the rated line voltage to the actual line voltage.

$$\text{"New" Isec} = \text{Original Isec} \times \frac{\text{Rated Line Voltage}}{\text{Actual Line Voltage}}$$

Example

Original Isec = 4.55
Rated Line Voltage = 460V
Actual Line Voltage = 485V

$$\text{"New" Isec} = 4.55 \times \frac{460V}{485V} = 4.32$$

Using the "new" Isec value, the current calibrator number and Table 1, determine appropriate potentiometer setting; then readjust the pot to this value. (Remember that readjusting the current calibrator not only compensates for the high-voltage condition, but also recalibrates all other SSOL functions.)

* * * * * * *

Note: Whenever the SSOL is recalibrated for high voltage—whether by removing the J1-J2 jumper or by readusting the current calibrator, turn the LRA potentiometer 1 dial setting higher than that indicated in Figure 5 to prevent nuisance "trips" at start-up (since higher-than-nameplate LRA current draw will occur). Also, be sure to record the method—and reason for—high-voltage compensation on the cover of the SSOL module!

Dry-Running Starters w/SSOL Modules

Starter panels equipped with the SSOL module can be dry-run at start-up in the same manner as starters without the SSOL. However, 2 important differences must be noted:

1. The distribution-fault circuit breaker must be disconnected before the starter can be dry run. To disconnect the distribution-fault circuit breaker, simply remove a wire from it. If the breaker is not disconnected, the starter will not sequence, and the SSOL module will lock out on distribution fault as soon as the start sequence begins. (Lockout occurs because the distribution fault trip is initiated when motor current drops below 15% of the RLA with the M1 contactor energized; see "Distribution-Fault Circuit Breaker Operation". This situation will only occur during an actual distribution fault or during a starter dry-run.)

2. The starter will transition as soon as the dry-run is initiated. This immediate transition occurs because the SSOL initiates transition on the basis of motor current draw. During a normal start-up, motor current draw falls from the LRA value to one that is below the RLA because the inlet vanes are closed; when motor current draw falls to 85% of RLA during the start sequence, the SSOL initiates transition.

However, during a dry run, there is no current draw so the SSOL initiates transition immediately (within 1 second).

Note: The starter dry-run procedure is a good way to test the SSOL's distribution fault function; if it is working properly, the distribution-fault circuit breaker will trip as soon as the start sequence is initiated (provided that the breaker was not disconnected).

Operation of the Distribution-Fault Circuit Breaker

"Distribution fault" is defined as the total loss of line voltage for a period lasting less than 60 electrical cycles. This type of short-duration power interruption can be damaging to many types of induction-motor-driven equipment since an induction motor acts as a generator for several seconds after power is disconnected. The voltage generated by a water-cooled CenTraVac motor, for instance, is often sufficient to "hold in" control relays and starter contactors for approximately 60 electrical cycles---or 1 second---when a voltage-loss occurs.

If line voltage is re-established while the contactors are held in by motor-generated voltage---and the two voltages are out of phase, motor torques that are 6 to 10 times greater than the normal running torques can occur. These torques occur as the motor is pulled into phase and may be in either direction (forward or reverse). Such excessive torques severely overload the impeller hub area and may, in turn, upset the impeller keyway or---in severe cases---crack or destroy the impellers.

SSOL modules detect a distribution fault by monitoring current draw and the status of the M1 contactor. The distribution-fault circuit breaker is designed to trip when motor current draw is less than 15% of RLA while the M1 contactor is energized. The SSOL detects the existence of a distribution fault within 1-1/2 electrical cycles, and---within 6 cycles (1/10 of a second) ---trips the distribution-fault circuit breaker to take the compressor motor off line.

Normally, this situation will only occur during an actual distribution fault (or during a starter dry run) since: (a) an induction motor will typically draw more than 15% of RLA---even when completely unloaded, and (b) when the M1 contactor is energized, the motor is running.

Troubleshooting the SSOL

Note: The information presented in the following troubleshooting chart is only applicable for the SSOL; use of this chart alone will not verify the integrity of other starter panel components.

SSOL Troubleshooting Chart

Symptom	Recommended Action
Distribution-fault circuit breaker trips . . .	
1. while the chiller is running.	1. If this fault becomes a nuisance problem, use TOL-90 and the checkout procedures described in TOL-OM-1 to verify that the SSOL is functioning properly. If the results of this checkout indicate that the SSOL is defective, replace it.
2. during the start sequence, at the point when transition should occur.	2. Check for: a. installation of power-factor correction capacitors (PFCCs) on the start contactor (K27, or "1M"). If the PFCCs were incorrectly wired to the run contactor (K28, or "2M") instead of K27, the PFCCs will be placed in parallel at start-up, and the change in capacitance could drive the available current down to 15% of RLA. b. bouncing contacts---especially the auxiliary contacts on the starter contactors.
3. when the starter de-energizes during the normal chiller shutdown sequence.	3. This symptom is usually <u>not</u> the result of a SSOL problem; see service bulletin CTV-SB-76 for corrective action. However, if the suggestions described in CTV-SB-76 do not eliminate this problem, replace the SSOL.
Motor-current-overload circuit breaker trips . . .	
1. at start-up.	1. Check the: a. locked rotor setpoint potentiometer to make sure that it isn't turned too low. To properly set this pot, follow the instructions under "Locked Rotor Current Lockout Adjustment" in this bulletin. **Note:** The locked rotor setpoint pot is <u>only</u> found on Versions 1 and 2 of the SSOL. b. acceleration time setting. See "Maximum Acceleration Time Setup" in this bulletin. c. SSOL with TOL-90 and the instructions provided in TOL-OM-1. If this check indicates that the SSOL is defective, replace it.
2. at transition.	2. Check the SSOL module's terminal strip; <u>if Terminals 5 and 6 are labeled "F1" and "F2"</u>, complete the corrective action described in service bulletin CTV-SB-65.

(Continued on next page . . . . .)

SSOL Troubleshooting Chart (concluded)

Symptom	Recommended Action
Motor-current-overload circuit breaker trips . . . (continued)	
3. immediately after chiller loads up.	3. Check the: a. polarity of the V1-V2 wires connected to the capacity control module in the chiller control panel. b. voltage at V1-V2 in the SSOL. If the voltage measured at V1---with respect to V2---is positive, replace the SSOL.
4. at a value less than 100% of RLA.	4. Check: a. the balance of the 3-phase current. It may be necessary to add the electrolytic capacitor (CPT-335) described in CTV-SB-75. **Note:** The check just described in 4a is only applicable for SSOL Versions 1 and 2. b. for phase loss or phase reversal at the SSOL. To do this, connect the positive (+) lead of an oscilloscope to SSOL Terminal B1 and the negative (-) lead to Terminal B2. The oscilloscope should display a normal sine wave, as shown in Figure 7. If 1 phase is missing, the sine wave will appear as shown in Figure 8; Figure 9 shows the the type of sine wave produced if 1 phase is reversed.
Chiller does not transition.	1. Check for closure of the auxiliary K27 contacts in the SSOL's S1-S2 circuit. 2. Use TOL-90 to perform the "transition level" functional test described in TOL-OM-1. If test results verify that the transition relay on the SSOL is "pulling in", use an ohmmeter to check for closure of the transition relay contacts. If these contacts fail to close, replace the SSOL's transition relay (RLY-849).
Chiller transitions as soon as the start sequence is initiated.	1. Check the 3-phase current signals with an oscilloscope; see Item 4b under "Recommended Action" above. 2. Use TOL-90 and the checkout procedures described in TOL-OM-1 to check SSOL operation. If test results indicate that the SSOL is defective, replace it.

Figure 7
Normal Sine Wave

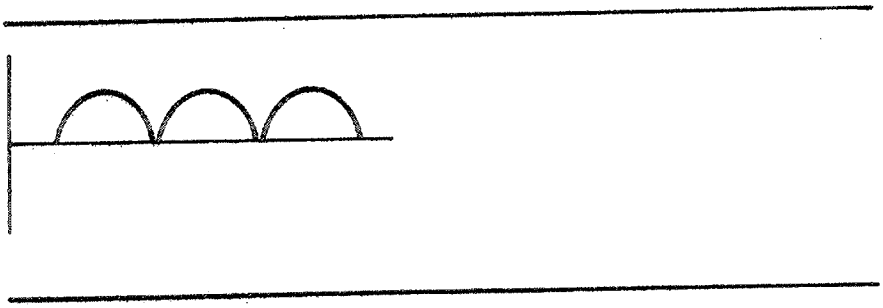

Figure 8
Abnormal Sine Wave:
Missing Phase

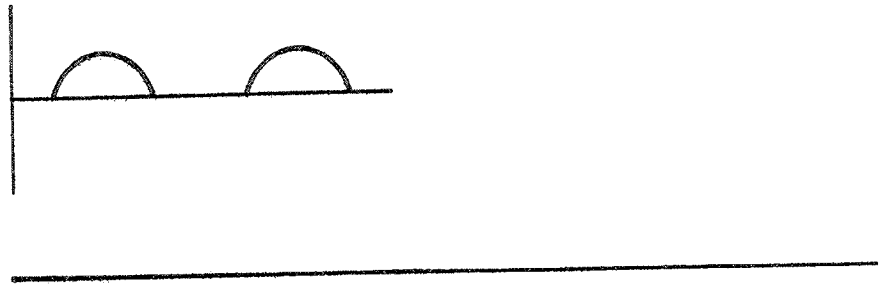

Figure 9
Abnormal Sine Wave:
Phase Reversal



For further information on this product or other Trane products, refer to the "Trane Service Literature Catalog", ordering number IDX-IOM-1. This catalog contains listings and prices for all service literature sold by Trane. The catalog may be ordered by sending a $20.00 check to: The Trane Company, Service Literature Sales, 3600 Pammel Creek Road, La Crosse, WI 54601.

PRINTED BY PRODUCTION SERVICES — LA CROSSE

BB /LW

TRANE™

General Service Bulletin

CTV-SB-79A

Library	**Service Literature**
Product Section	**Refrigeration**
Product	**Centrifugal Liquid Chillers**
Model	**CTV**
Literature Type	**General Service Bulletin**
Sequence	**79A**
Date	**8/7/92**
File No.	**SV/RF-CTV-CTV-SB-79A-892**
Supersedes	**CTV-SB-79 11/6/87**

Subject: CenTraVac® Conversions and Reselections

Introduction:

This general service bulletin describes the required procedure for receiving same day quotations for Engineered Conversions℠ or requesting La Crosse-run selections for existing centrifugal chillers. These reselections are typically necessary when chillers are being evaluated for energy efficiency, ice storage or when the operating parameters change due to waterflow or temperature conditions.

Engineered Conversions quotations and estimated performance on HCFC-123 can be supplied on the same day requested if the form is completed. There will be some limitations on this same day response. These include high voltage, special units. TriStar™ selections or units that do not have standard Louis Allis motor types of RCS, RPS, RVS, RVX and DRV. Also, if the form is incomplete, the response will NOT be the same day.

Discussion:

To request an Engineered Conversion quotation for an existing CenTraVac:

1. Complete a copy of the "Engineered Conversion Request for Quote" form; an example of a completed form is shown on page 2. This form can be ordered from Literature Services using order no. 1-30.156.
2. FAX the completed form to:
   The Trane Company
   Existing Building Services
   Chiller Evaluation Group
3. As an alternative, you can use the PROFS miniform, CONVQTE, Engineered Conversion Request for Quote. Complete this electronic form as above but send it to PROFS ID: EBS — Existing Building Services printer.

To request a La Crosse-run selection for an existing CenTraVac:

NOTE: You will be charged $250.00 for an initial selection request on an existing chiller; additional reselection runs performed for the same chiller will cost $50.00 per run. A purchase order number is required before any work will be done.

Reselections are completed on a "first-come, first-served" basis, the anticipated turnaround will be within five days of receipt. You will be notified immediately if we cannot complete the reselection within this timetable.

1. Complete a copy of the "CenTraVac Reselection Request" form; an example of a completed form is shown on page 3. This form can be ordered from Literature Services using order no. 1-30.156.
2. FAX the completed form to:
   The Trane Company
   Existing Building Services
   Chiller Evaluation Group
3. As an alternative, you can use the PROFS miniform, CTVREQ, CenTraVac Reselection Request. Complete this electronic form as above but send it to PROFS ID: EBS — Existing Building Services printer.
4. The field should be aware that the existing CenTraVac Selection program in the office can be used to reselect any CVHE or CVHB155 within reasonable limits to answer most questions. Typically, this is within 2% of actual.
5. Any reselection charges that result in the sale of a new chiller or an Engineered Conversion will be credited to the appropriate commission account.

An example of a completed "CenTraVac Reselection Request" form is provided below for your reference.

To run the requested reselection(s), these blanks must be filled in completely.

TRANE™

CenTraVac® Reselection Request

The Trane Company
3600 Pammel Creek Road
La Crosse WI 54601-7599

Requested By	Job Name
Trane Office	Unit Model Number
Date	Original Unit Sales Order
Purchase Order Number	Unit Serial Number

Required Reselection Data	CenTraVac Chiller Operating Characteristics	Original Conditions	New Conditions For: Reselection Run #1	Reselection Run #2
	Ent. Evaporator Water Temp.	45	26	26
	Lvg. Evaporator Water Temp.	55	?	?
	Evap. Water Flow Rate	1000	1000	1000
	Evap. Water Pressure Drop (Feet of Water)	15		
	Glycol Concentration	0	30%	30%
	Fouling Factor	0.0005	0.0005	0.0005
	Tons	417	Max.	Max.
	Kw	314		
	Ent. Condenser Water Temp.	85	85	80
	Lvg. Condenser Water Temp.	95	?	?
	Cond. Water Flow Rate	1200	1200	1200
	Cond. Water Pressure Drop (Feet of Water)	17	17	17
	Glycol Concentration	0	0	0
	Fouling Factor	0.0005	0.0005	0.0005
	Refrigerant	R-11	R-11	R-11

What is the **minimum** entering condenser water temperature available for reselection? 80 F

Would you consider changing impellers to meet the new conditions? ☐ Yes ☒ No

Would you consider changing the motor? ☐ Yes ☒ No

Comments:

1-30.156—(892)
Supersedes 1-30.156—(1187)

An example of a completed "Engineered Conversion Request For Quote" form is provided below for your reference.

For Same Day Quotation
All blanks must be filled
in completely.

To: Existing Building Services — Chiller Evaluation Group
FAX: (608) 787-2996
PROFS: EBS

Job Name: Any Building
Unit Model Number: PCV3J C1 B1 *(Complete, no partials please)*
Unit Serial Number: L 4 H 00000

Engineered Conversion Request For Quote

Operating Parameters

	Ent. Water	Lvg. Water	GPM	Fouling*
Evaporator	54	44	840	.00025
Condenser	85	95	1050	.00075

Tons 350 KW 286
*Assumes ARI 5590 as Standard.

Motor Information

Type RCS (RCS, RPS, RVS, RCC, RVX, DRV, etc.)
Motor Size 1768 (Frame Size)
Voltage 460
(BHP) or KW 381
RLA _____ (amps at sales order conditions)
FLA 443 (maximum amps motor is capable of)
LRA 2700
Is this the original motor? ☒ Yes ☐ No

Unit Information

Does the unit have Free Cooling? no Trane _____ Other _____
Does the unit have Hot Gas Bypass? no
Does the unit have any other special features? Explain below:
retubed evap. 1984 with TUB XXXX

Notes:
- Motor Pricing is based on exchange basis. You will be notified whether to return the motor to ServiceFirst® or scrap the motor locally.
- If the motor is not returned when requested, the office will be charged $1500 as minimum.

Send Quote To:

Name: Existing Building Sales Person Office: EBS

Fill in the following as how or where you would like to receive the quote:

TRANET Code: _____
FAX: (608) 787-2996
PROFS ID: EBS

1-30.156—(Back)—(892)

The Trane Company
La Crosse, Wisconsin 54601-7599
Printed In U.S.A.

©American Standard In. 1992

For further information on this product or other Trane products, refer to the "Trane Service Literature Catalog," ordering number IDX-IOM-1. This catalog contains listings and prices for all service literature sold by Trane. The catalog may be ordered by sending a $35 check to: The Trane Company, Service Literature Sales, 3600 Pammel Creek Road, La Crosse, WI 54601-7599.

TRANE

General Service Bulletin

CTV-SB-82D

Library	Service Literature
Product Section	Refrigeration
Product	Centrifugal Liquid Chillers
Model	CVHB, CVHE
Literature Type	Confidential Service Bulletin
Sequence	82D
Date	April 26, 1994
File No.	SV-RF-CTV-CTV-SB-82D-494
Supersedes	CTV-SB-82C dated 1/31/92

Literature Changes:
CTV-SB-82 (4/91)--Original issue of bulletin.
CTV-SB-82A (5/91)--Bulletin revised to incorporate cautionary statement on mixing of refrigerants.
CTV-SB-82B (7/91)--Bulletin revised to incorporate changes required due to revised AEL for HCFC-123.
CTV-SB-82C (1/92)--Bulletin revised to update information to include motor winding insulation and cation" section.
CTV-SB-82D (4/94)--Revised to incorporate new information regarding safe handling of CFC-11 and HCFC-123 and additional guidelines.

Subject: HCFC-123 For Centrifugal Water Chillers

Introduction:

HCFC-123 is the acceptable alternative refrigerant to CFC-11 for application in low-pressure centrifugal water chillers which have been designed or retrofitted for use with this refrigerant. There are a great number of similarities and some differences between HCFC-123 and CFC-11. This service bulletin will discuss these similarities and differences so personnel conducting start-up and service work on HCFC-123 chillers are familiar with the proper procedures for handling HCFC-123.

Discussion:

A comparison of Material Safety Data Sheets (MSDS) for HCFC-123 and CFC-11 will show many similarities. Obtain and review the MSDS for HCFC-123 prior to handling this new refrigerant. All Trane Commercial Sales Offices have copies of the MSDS for HCFC-123 and CFC-11. A comparison of some of the characteristics of HCFC-123 and CFC-11 is made in Table 1 on the next page.

Since the Trane Company has a policy of continuous product improvement, it reserves the right to change specifications and design without notice. The installation and servicing of the equipment referred to in this booklet should be done by qualified, experienced technicians.

Table 1
Physical Data Comparison for HCFE-123 and CFC 11

Physical Data	HCFC-123	CFC-11
Boiling Point	27.6 C (81.7 F @ 760mm Hg	23.9 C (75 F) @ 760mm Hg
Vapor Pressure	13 psia @ 25C (77F)	15.3 psia @ 25 C (77 F)
pH Information	Neutral	Neutral
Color	Colorless	Colorless
Odor	Slight Ethereal	Slight Ethereal
Flash Point	Will Not Burn	Will Not Burn

Hazardous Reactivity:

Both HCFC-123 and CFC-11, as well as many other commonly used fluorocarbon-based refrigerants. can be decomposed by high temperature (open flames, glowing metal surfaces, etc.) forming hydrochloric and hydrofluoric acids, and possibly, carbonyl halides.

Health Hazard Information:

Exposure Limits

Safe handling is essential for all refrigerants. The specific requirements for HCFC-123 are provided in "Refrigerant Handling Guidelines" (CFC-GUIDE-2). A consideration in using HCFC-123, is the AEL (Allowable Exposure Level) of 30 parts-per-million. The AEL for HCFC-123 dictates specific handling requirements and practices when using HCFC-123 in centrifugal water chillers, to insure safe and environmentally sound operation. In the case of a major spill, resulting in accidental exposures above the AEL, the short-term toxicological effects of HCFC-123 are quite comparable to those seen with CFC-11. See Table 2 for a safe handling comparison of CFC-11 and HCFC-123. Present agency-established and manufacturer-recommended personal exposure levels to HCFC-123 and CFC-11 are given in Table 3.

Table 2
Shows Safe Handling Table comparing CFC-11 and HCFC-123

Safe Handling For the HVAC Industry the Danger is Acute not Chronic		CFC-11	HCFC-123
Chronic	AEL	1,000 ppm	30 ppm
Accute	EEL	1,000 ppm	1,000 ppm
	LC_{50}	26,000 ppm	32,000 ppm
	Cardiac Sensitization	5,000 ppm	20,000 ppm
	Anesthetic Effect (10 Min)	35,000 ppm	40,000 ppm

©American Standard Inc. 1994

Table 3
Allowable Personal Exposure Levels for HCFC-123 and CFC-11

Exposure Level Acronym	Source	HCFC-123	CFC-11
PEL (1)	OSHA (5)	Not Established	Not Established
Ceiling (2)	OSHA (6)	Not Established	1,000 ppm
AEL (3)	DuPont (6)	30 ppm	1,000
EEL (4)	DuPont (6)	1,000 ppm	1,000

Notes:
1. PEL = Permissible Exposure Limit. OSHA time-weighted average. The employee's average airborne exposure in any 8-hour workshift of a 40-hour workweek, which shall not be exceeded.
2. Ceiling = The employee's exposure level which shall not be exceeded for any time period.
3. AEL = Acceptable Exposure Level. An employee's average, airborne exposure in any in any 8-hour workshift of a 40-hour workweek, which shall not be exceeded.
4. EEL = Emergency Exposure Level. Maximum exposure-level ceiling during emergency situations, such as a spill or accidental chemical release. Exposure duration shall not exceed one hour. Escape is feasible without suffering any escape-impairing or irreversible effects on employee health.
5. OSHA = Occupational Safety and Health Administration.
6. DuPont = DuPont Chemicals.
7. ppm = Parts-per-million.

Personal Protection Requirements:

The minimum personal respiratory protection equipment requirements at various exposure levels are listed in Table 4.

Table 4
Minimum Respirator Protection for HCFC-123

PPM	Exposure Time	Minimum Equip. Required
Less than 30 as a TWA*	8 or 12 Hours per day	None
In the event of unusual/non-routine tasks or when work place levels may exceed 30-PPM for other than the above exception:		
30-100		1/2 Mask - Organic Vapor Cartridge or Canister
100-500		Full Mask - Organic Vapor Cartridge or Canister
Greater than 500		SCBA or Full Face Air Line

* Instantaneous Spikes may occur during breaking of charge lines, tapping of drums etc. When factored into the Timed Weighted Average, these excursions have not resulted in exceeding the AEL during ROUTINE servicing.

Service Requirements:

The refrigerant handling guidelines detailed in Trane's "CTV-SB-81B", in "CFC-Guide-2" and in DuPont's "PUSH-123", must be followed. Particular attention must be given to the purge system and the unit relief vent lines. HCFC-123 can collect in these locations in a liquid state and must be properly drained prior to servicing. Do not open the unit to atmosphere for service work until the refrigerant charge is fully removed or recovered. Avoid spills while charging and removing charge from machines. Drain refrigerant from hoses and charging equipment into acceptable containers. Seal all containers after use. As with any fluorocarbon-based refrigerant, a self-contained breathing apparatus (SCBA) is highly recommended in the event of a large spill.

CAUTION: When adding refrigerant to a chiller operating on HCFC-123, use HCFC-123 only. Use of other types of refrigerant (i.e., CFC-11, CFC-113) may affect unit performance, deteriorate gaskets, seals, motor winding insulation or varnish, and will render the refrigerant charge unsalvageable.

All personnel performing service work on an HCFC-123 centrifugal water chiller must:

- Before performing service, activate customer's equipment room ventilation system and maintain ventilation flow at highest possible level during service procedures.

- Verify the presence and proper calibration of the customer's equipment room refrigerant monitor. It is possible to release traces of refrigerant gas during normal service procedures (i.e., refrigerant charging, removing or reclaiming refrigerant, opening the chiller to atmosphere, etc.). This device must detect levels of HCFC-123 that insures the AEL of 30 ppm is not exceeded. Above 30 ppm concentration, the monitor must activate an automatic alarm.

Air Monitors For Service Personnel:

A refrigerant monitor must be installed that has the capability of detecting HCFC-123 in the range of 0-200 ppm and activate an alarm above 30 ppm. Since HCFC-123 vapor is heavier than air, the air monitor sensing device should be located 12"-18" above the floor, and in close proximity to the HCFC-123 chiller location, to provide adequate sensing and early warning indications for safety. Typically, an equipment room refrigerant concentration level of 30 ppm during normal unit operation would indicate a leak condition that requires corrective service procedures. Long-term exposures (continuous 8 hrs/day; 5 days/wk; for an entire working career) to levels over 30 ppm could provide the potential for health hazards. For additional protective directives refer to Trane manual RF-AM-3. Contact the CenTraVac Technical Service Department in La Crosse to identify a recommended air monitor. Additional sources of refrigerant monitoring devices are listed in various HVAC-industry publications and in the Thomas Register.

Typical refrigerant levels present in equipment rooms with HCFC-123 chillers have been reported below one part-per-million during normal operation and up to 8 ppm during normal maintenance, after all refrigerant has been properly removed or recovered from the machine.

Safe Application of HCFC-123:

Trane, York, DuPont, Allied Signal, and even the United States Environmental Protection Agency (EPA) have publicly stated that HCFC-123 can be used safely in centrifugal chillers with equipment room concentrations being held well below one part-per-million during normal operation, providing a margin of safety of at least 30-to-1, as long as the equipment room guidelines established in ASHRAE "Standard 15" are followed.[1] Refrigerant vapor concentrations found during servicing of equipment are normally held below two ppm, on a time-weighted average, as long as the recommended refrigerant handling procedures in Trane's "Refrigerant Handling Guidelines" (CFC-GUIDE-2) are followed.[2] Now that all the facts are known, the primary concern over the safety of HCFC-123 is a matter that can easily be handled through proper design of the equipment room and by adherence to established refrigerant handling practices.

1. Data supported by two detailed reports; a Trane/DuPont HCFC-123 equipment room concentration report "CFC-Report-1", October 1991, and the United States EPA equipment room concentration report (both available from The Trane Company).
2. For a report relating actual measured HCFC-123 concentration levels in various equipment rooms, contact the CenTraVac Technical Service Department of the La Crosse Business Unit at (608) 787-3943.

 ©American Standard Inc. 1994

TRANE

General Service Bulletin

CTV-SB-82D

Library	Service Literature
Product Section	Refrigeration
Product	Centrifugal Liquid Chillers
Model	CVHB, CVHE
Literature Type	Confidential Service Bulletin
Sequence	82D
Date	April 26, 1994
File No.	SV-RF-CTV-CTV-SB-82D-494
Supersedes	CTV-SB-82C dated 1/31/92

Literature Changes:
CTV-SB-82 (4/91)--Original issue of bulletin.
CTV-SB-82A (5/91)--Bulletin revised to incorporate cautionary statement on mixing of refrigerants.
CTV-SB-82B (7/91)--Bulletin revised to incorporate changes required due to revised AEL for HCFC-123.
CTV-SB-82C (1/92)--Bulletin revised to update information to include motor winding insulation and cation" section.
CTV-SB-82D (4/94)--Revised to incorporate new information regarding safe handling of CFC-11 and HCFC-123 and additional guidelines.

Subject: HCFC-123 For Centrifugal Water Chillers

Introduction:

HCFC-123 is the acceptable alternative refrigerant to CFC-11 for application in low-pressure centrifugal water chillers which have been designed or retrofitted for use with this refrigerant. There are a great number of similarities and some differences between HCFC-123 and CFC-11. This service bulletin will discuss these similarities and differences so personnel conducting start-up and service work on HCFC-123 chillers are familiar with the proper procedures for handling HCFC-123.

Discussion:

A comparison of Material Safety Data Sheets (MSDS) for HCFC-123 and CFC-11 will show many similarities. Obtain and review the MSDS for HCFC-123 prior to handling this new refrigerant. All Trane Commercial Sales Offices have copies of the MSDS for HCFC-123 and CFC-11. A comparison of some of the characteristics of HCFC-123 and CFC-11 is made in Table 1 on the next page.

Since the Trane Company has a policy of continuous product improvement, it reserves the right to change specifications and design without notice. The installation and servicing of the equipment referred to in this booklet should be done by qualified, experienced technicians.

Table 1
Physical Data Comparison for HCFE-123 and CFC 11

Physical Data	HCFC-123	CFC-11
Boiling Point	27.6 C (81.7 F @ 760mm Hg	23.9 C (75 F) @ 760mm Hg
Vapor Pressure	13 psia @ 25C (77F)	15.3 psia @ 25 C (77 F)
pH Information	Neutral	Neutral
Color	Colorless	Colorless
Odor	Slight Ethereal	Slight Ethereal
Flash Point	Will Not Burn	Will Not Burn

Hazardous Reactivity:

Both HCFC-123 and CFC-11, as well as many other commonly used fluorocarbon-based refrigerants. can be decomposed by high temperature (open flames, glowing metal surfaces, etc.) forming hydrochloric and hydrofluoric acids, and possibly, carbonyl halides.

Health Hazard Information:

Exposure Limits

Safe handling is essential for all refrigerants. The specific requirements for HCFC-123 are provided in "Refrigerant Handling Guidelines" (CFC-GUIDE-2). A consideration in using HCFC-123, is the AEL (Allowable Exposure Level) of 30 parts-per-million. The AEL for HCFC-123 dictates specific handling requirements and practices when using HCFC-123 in centrifugal water chillers, to insure safe and environmentally sound operation. In the case of a major spill, resulting in accidental exposures above the AEL, the short-term toxicological effects of HCFC-123 are quite comparable to those seen with CFC-11. See Table 2 for a safe handling comparison of CFC-11 and HCFC-123. Present agency-established and manufacturer-recommended personal exposure levels to HCFC-123 and CFC-11 are given in Table 3.

Table 2
Shows Safe Handling Table comparing CFC-11 and HCFC-123

Safe Handling For the HVAC Industry the Danger is Acute not Chronic		CFC-11	HCFC-123
Chronic	AEL	1,000 ppm	30 ppm
Accute	EEL	1,000 ppm	1,000 ppm
	LC_{50}	26,000 ppm	32,000 ppm
	Cardiac Sensitization	5,000 ppm	20,000 ppm
	Anesthetic Effect (10 Min)	35,000 ppm	40,000 ppm

©American Standard Inc. 1994

Table 3
Allowable Personal Exposure Levels for HCFC-123 and CFC-11

Exposure Level Acronym	Source	HCFC-123	CFC-11
PEL (1)	OSHA (5)	Not Established	Not Established
Ceiling (2)	OSHA (6)	Not Established	1,000 ppm
AEL (3)	DuPont (6)	30 ppm	1,000
EEL (4)	DuPont (6)	1,000 ppm	1,000

Notes:
1. PEL = Permissible Exposure Limit. OSHA time-weighted average. The employee's average airborne exposure in any 8-hour workshift of a 40-hour workweek, which shall not be exceeded.
2. Ceiling = The employee's exposure level which shall not be exceeded for any time period.
3. AEL = Acceptable Exposure Level. An employee's average, airborne exposure in any in any 8-hour workshift of a 40-hour workweek, which shall not be exceeded.
4. EEL = Emergency Exposure Level. Maximum exposure-level ceiling during emergency situations, such as a spill or accidental chemical release. Exposure duration shall not exceed one hour. Escape is feasible without suffering any escape-impairing or irreversible effects on employee health.
5. OSHA = Occupational Safety and Health Administration.
6. DuPont = DuPont Chemicals.
7. ppm = Parts-per-million.

Personal Protection Requirements:

The minimum personal respiratory protection equipment requirements at various exposure levels are listed in Table 4.

Table 4
Minimum Respirator Protection for HCFC-123

PPM	Exposure Time	Minimum Equip. Required
Less than 30 as a TWA*	8 or 12 Hours per day	None
In the event of unusual/non-routine tasks or when work place levels may exceed 30-PPM for other than the above exception:		
30-100		1/2 Mask - Organic Vapor Cartridge or Canister
100-500		Full Mask - Organic Vapor Cartridge or Canister
Greater than 500		SCBA or Full Face Air Line

* Instantaneous Spikes may occur during breaking of charge lines, tapping of drums etc. When factored into the Timed Weighted Average, these excursions have not resulted in exceeding the AEL during ROUTINE servicing.

Service Requirements:

The refrigerant handling guidelines detailed in Trane's "CTV-SB-81B", in "CFC-Guide-2" and in DuPont's "PUSH-123", must be followed. Particular attention must be given to the purge system and the unit relief vent lines. HCFC-123 can collect in these locations in a liquid state and must be properly drained prior to servicing. Do not open the unit to atmosphere for service work until the refrigerant charge is fully removed or recovered. Avoid spills while charging and removing charge from machines. Drain refrigerant from hoses and charging equipment into acceptable containers. Seal all containers after use. As with any fluorocarbon-based refrigerant, a self-contained breathing apparatus (SCBA) is highly recommended in the event of a large spill.

CAUTION: When adding refrigerant to a chiller operating on HCFC-123, use HCFC-123 only. Use of other types of refrigerant (i.e., CFC-11, CFC-113) may affect unit performance, deteriorate gaskets, seals, motor winding insulation or varnish, and will render the refrigerant charge unsalvageable.

All personnel performing service work on an HCFC-123 centrifugal water chiller must:

- Before performing service, activate customer's equipment room ventilation system and maintain ventilation flow at highest possible level during service procedures.

- Verify the presence and proper calibration of the customer's equipment room refrigerant monitor. It is possible to release traces of refrigerant gas during normal service procedures (i.e., refrigerant charging, removing or reclaiming refrigerant, opening the chiller to atmosphere, etc.). This device must detect levels of HCFC-123 that insures the AEL of 30 ppm is not exceeded. Above 30 ppm concentration, the monitor must activate an automatic alarm.

Air Monitors For Service Personnel:

A refrigerant monitor must be installed that has the capability of detecting HCFC-123 in the range of 0-200 ppm and activate an alarm above 30 ppm. Since HCFC-123 vapor is heavier than air, the air monitor sensing device should be located 12"-18" above the floor, and in close proximity to the HCFC-123 chiller location, to provide adequate sensing and early warning indications for safety. Typically, an equipment room refrigerant concentration level of 30 ppm during normal unit operation would indicate a leak condition that requires corrective service procedures. Long-term exposures (continuous 8 hrs/day; 5 days/wk; for an entire working career) to levels over 30 ppm could provide the potential for health hazards. For additional protective directives refer to Trane manual RF-AM-3. Contact the CenTraVac Technical Service Department in La Crosse to identify a recommended air monitor. Additional sources of refrigerant monitoring devices are listed in various HVAC-industry publications and in the Thomas Register.

Typical refrigerant levels present in equipment rooms with HCFC-123 chillers have been reported below one part-per-million during normal operation and up to 8 ppm during normal maintenance, after all refrigerant has been properly removed or recovered from the machine.

Safe Application of HCFC-123:

Trane, York, DuPont, Allied Signal, and even the United States Environmental Protection Agency (EPA) have publicly stated that HCFC-123 can be used safely in centrifugal chillers with equipment room concentrations being held well below one part-per-million during normal operation, providing a margin of safety of at least 30-to-1, as long as the equipment room guidelines established in ASHRAE "Standard 15" are followed.[1] Refrigerant vapor concentrations found during servicing of equipment are normally held below two ppm, on a time-weighted average, as long as the recommended refrigerant handling procedures in Trane's "Refrigerant Handling Guidelines" (CFC-GUIDE-2) are followed.[2] Now that all the facts are known, the primary concern over the safety of HCFC-123 is a matter that can easily be handled through proper design of the equipment room and by adherence to established refrigerant handling practices.

1. Data supported by two detailed reports; a Trane/DuPont HCFC-123 equipment room concentration report "CFC-Report-1", October 1991, and the United States EPA equipment room concentration report (both available from The Trane Company).
2. For a report relating actual measured HCFC-123 concentration levels in various equipment rooms, contact the CenTraVac Technical Service Department of the La Crosse Business Unit at (608) 787-3943.

 ©American Standard Inc. 1994

TRANE

General Service Bulletin

CTV-SB-83

Library	Service Literature
Product Section	Refrigeration
Product	Centrifugal Liquid Chillers
Model	CVHB, CVHE
Literature Type	General Service Bulletin
Sequence	83
Date	June 15,1990
File No.	SV-RF-CTV-CTV-SB-83-690
Supersedes	

Literature Changes:
CTV-SB-83 (6/90) --Original issue of bulletin.

Subject: CenTraVac Voltage Surge Arrestors (MOV's)

Introduction:

A potential safety problem has been identified with the voltage surge arrestors (MOV's) that are factory-installed on Model CVHE and CVHB centrifugal chillers with a voltage rating of 600 VAC (nominal) or less. These surge arrestors are mounted on the side of the CenTraVac motor terminal junction box. The CenTraVac technical service department has received three separate reports of explosive failure of an MOV. This bulletin affects any CVHE or CVHB units equipped with these voltage surge-protection devices.

Discussion:

In 1988, a special engineering team identified several design improvements for CenTraVac low-voltage motors that were intended to provide motor voltage-surge protection. Most of the recommended changes applied to the motor internal wiring and motor-stator manufacturing procedures. All of these changes have been implemented since that time. To provide surge protection during the interim period when these changes were being implemented, the team also recommended factory installation of voltage surge arrestors on the motor terminal junction box.

Recent vendor tests indicate that under certain conditions, these devices can fail in a manner that propels the top of the MOV forcefully out of the MOV body. No injuries have resulted from this situation. Because The Trane Company feels that the motor design changes that have been intitiated recently, in themselves provide sufficient motor surge protection, a decision has been made to discontinue the use of MOV's.

Since the Trane Company has a policy of continuous product improvement, it reserves the right to change specifications and design without notice. The installation and servicing of the equipment referred to in this booklet should be done by qualified, experienced technicians.

Since MOV failure can potentially result in personal injury, all units equipped with MOV's must be identified and repaired. All operating units must be repaired immediately. Repair of units that have not been started must be accomplished at the time of start-up.

Units Affected:

All CVHE units, 600 VAC or less, manufactured August 18, 1988 and after and all CVHB units, 600 VAC or less, manufactured April 4, 1989 and after are affected. A manufacturing design change has been implemented to remove the MOV's. No CVHE or CVHB units shipped after May 31, 1990 are equipped with MOV's. A complete list of unit shipments for the dates indicated was provided to each office involved. Since all affected units are low voltage, the 8th digit of the unit model number will be a letter, A thru J.

Corrective Action:

The MOV's on all units affected by this bulletin must be disabled. To accomplish this, disconnect and discard the MOV electrical leads as follows:

1. Follow the procedures provided in the CVHE Service Guide (CTV-SG-2) to shut the unit down and secure it for service.

WARNING! To prevent injury or death due to electrical shock, lock unit disconnect in open position while servicing unit.

2. Remove the cover from the motor terminal junction box (remote-mounted starter) or open the starter panel access door (unit-mounted starter).

Figure 1
Typical CVHE Motor Terminal Junction Box

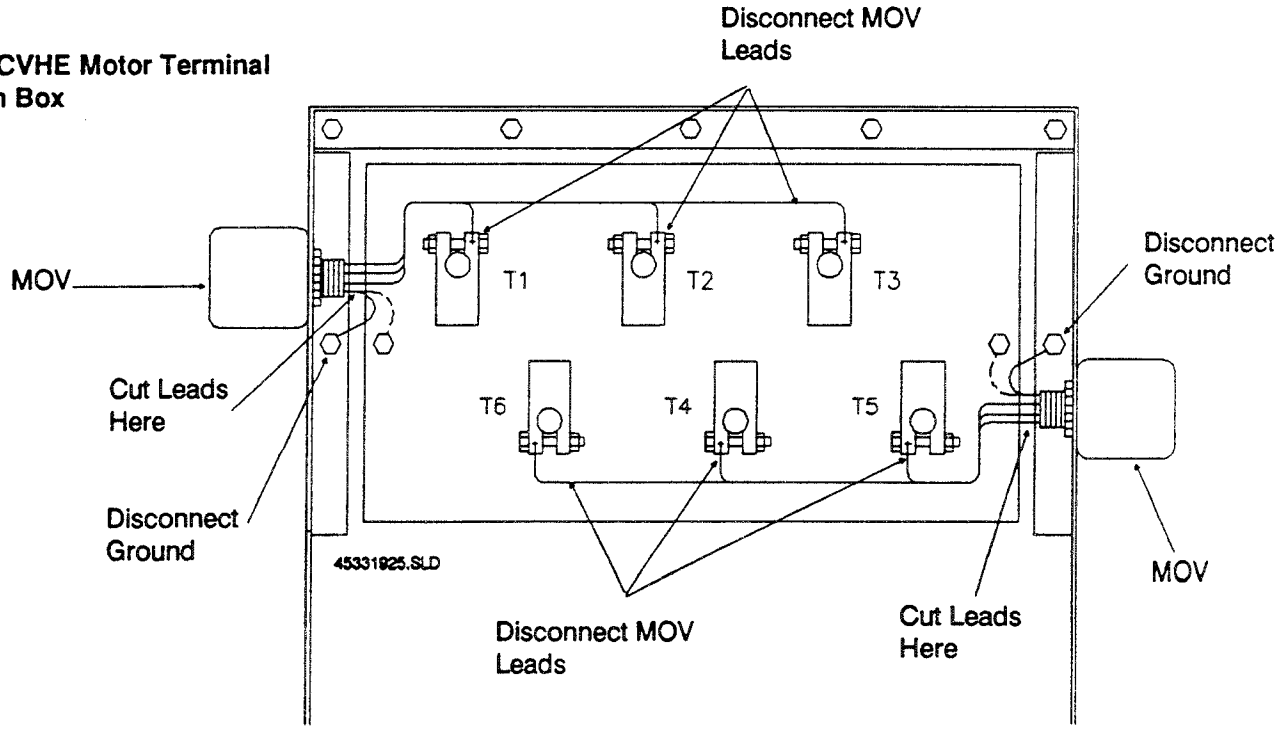

 © American Standard Inc.

3. Disconnect the MOV electrical leads at the motor terminals (T1-T6) and at their ground connections in the motor terminal junction box or in the unit-mounted starter connection box. Refer to Figure 1.

Note: There are two MOV's on each CenTraVac motor.

4. Cut off the four MOV electrical leads as close to the MOV as possible and discard the leads.

Note: Do not remove the MOV's from the motor terminal junction box or starter panel connection box. They are to be left in place on the terminal box.

5. Follow the procedures provided in the CVHE Service Guide (CTV-SG-2) to place the unit back into operation.

Parts Information:

No parts should be ordered for this procedure.

TRANE

General Service Bulletin

CTV-SB-85

Library	**Service Literature**
Product Section	**Refrigeration**
Product	**Centrifugal Liquid Chillers**
Model	**CTVV**
Literature Type	**General Service Bulletin**
Sequence	**85**
Date	**May 20, 1992**
File No.	**SV-RF-CTV-CTV-SB-85 5/92**
Supersedes	

Literature Changes:
CTV-SB-85 (5/20/92) -- Original date of bulletin - Correct solid-state load limit control and current transformer mismatch.

Subject: Solid-State Load Limit Control CNT1064 and Current Transformer Mismatch

introduction:

The purpose of this informational service bulletin is to provide general information related to what appears to be a functional problem with the CNT1064 solid-state load limit control system.

The CNT1064 is a direct replacement for the old style pneumatic load limit relay RLY0023. Instructions for this changeout are contained in CTV-SB-80.

Discussion:

The problem with this control is that; even if the control is properly installed, on some machines it will not properly unload the machine at load limit settings of 60% and below. It will, however, work properly at the 100% and 80% taps.

Since the Trane Company has a policy of continuous product improvement, it reserves the right to change specifications and design without notice. The installation and servicing of the equipment referred to in this booklet should be done by qualified, experienced technicians.

Problem Identification:

The malfunction of control CNT1064 is caused by the current transformer which drives it; it is not a problem with the CNT1064. However, the CNT1064 requires calibration.

In January of 1991, production of the previously used current transformer installed in older CenTraVacs was discontinued by the vendor. These current transformers are shown in Table 3 by part number. To meet the needs of customers who may experience a current transformer failure, replacement kits were created. These replacement kits were part number KIT1942 through KIT1948 (Table 3).

The current transformer contained in KIT1942 through 1948 is rated at 10 VA maximum. At that VA rating, the transformer will not drive the CNT1064. It may function properly at the 100% and 80% taps. However, once the load setting is reduced to 60% or less, the 10 VA current transformer contained in the kit becomes saturated and cannot overcome the high input impedance of the CNT1064.

Units Affected:

Units potentially affected by this bulletin include any unit from Table 1 or Table 2 which may have experienced an original current transformer failure after May 1991.

Table 1
Models and Design Sequences Which May Have Experienced An Original Current Transformer Failure

Model	Design Sequence (s)
CVHB	A through F
CVHA	A through H
Any unit listed in Table 2	

©American Standard, Inc. 1992

Table 2
Early CenTraVac Models And Instrument Panels

CenTraVac Model (s)	Instrument Panel No.
50L-300L Single CenTraVacs	PNL-0092 PNL-0103 PNL-0168 PNL-0171
800-1200 Duplex CenTraVacs	PNL-0169 PNL-0170 PNL-0173
CTV: 62.5-420 HP	PNL-0406 PNL-1476 PNL-1512, -2616 PNL-2617
CTV: 400 HP & Over	PNL-0172 PNL-0407 PNL-1477
CTV: w/N & R Compressors	PNL-1211
OCV: w/Electric Motor Drive	PNL-1211, -1512, -2616
OCV: Hi Speed w/Elect. Mtrs.	PNL-2159, -2176 PNL-2498, -2500 PNL-2560, -2564, -4585, -5608 PNL-3408, -3409, -4587, -4634, -5610 PNL-6726, -6729 PNL-6728, -6731 PNL-8795, 8797
PCV: 2C-5F, OJ-1J	PNL-1524 PNL-2490, -2539 PNL-2558, -4583, -5606
CV-9A-12F	PNL-1524 PNL-2490, -2539 PNL-2558, -4583, -5606
CV: 6C-7G	PNL-2157 PNL-2491, -2540 PNL-2559
CV: 6A-8C	PNL-4584, -5607
LCV: 1C-3F	PNL-2107 PNL-2492, -2541 PNL-2562
LCV: 4D-7B	PNL-2158 PNL-2493, -2542 PNL-2563
FCV: OK-2A	PNL-4585, -5608
LOCV	PNL-4596 PNL-5618
Miscellaneous (Time Delay Panel)	PNL-1267 PNL-1268

If a current transformer with a TRR number from Table 3 failed and was replaced with a KIT # from Table 3, the CNT1064 may not work properly. As stated earlier, this is due to the low VA rating of the current transformer included in the kit.

Table 3
Shows TRR, Rating and KIT Numbers
Affected by Voltamp Rating (10 VA max)

TRR#	Rating	KIT
TRR0275	100:5	1948
TRR0276	150:5	1948
TRR0111	200:5	1942
TRR0112	300:5	1943
TRR0113	400:5	1944
TRR0114	500:5	1944
TRR0115	600:5	1944
TRR0277	800:5	1945
TRR0379	1000:5	1946
TRR0773	1200:5	1946
TRR0774	1500:5	1946
TRR0775	2000:5	1947

Units Not Affected:

If the CNT1064 is installed in any machine listed under "Units Affected" or in Table 1 that has a current transformer rated at 35 VA or more, the CNT1064 will work properly. However, it may require calibration.

Corrective Action:

To correct this problem the current transformer in KIT1942 through 1948 will be replaced with a larger-burden transformer. The new kits will be part numbers KIT2120-2124. See "Parts Ordering Information". To determine if this problem is occurring, the CNT1064 should be calibrated and tested for proper operation as follows:

CNT1064 Check Out

To determine proper operation of CNT1064, complete the following procedures:

Setup:

1. Determine maximum input current from line current transformer to CNT1064 at machine full load amperage.

$$\frac{\text{FLA}}{\text{CT RATIO}} = \text{Maximum Input Current to CNT1064}$$

$$\text{CT RATIO} = \frac{\text{PRIMARY}}{\text{SECONDARY}}$$

Note:
Input current to the CNT1064 should not exceed 7.0 amps.

Example: Machine has 100:5 current transformer and the FLA (full load amps) is 90.

$$\text{CT RATIO} = \frac{100}{5} = 20$$

$$\text{Maximum input current to CNT1064 at full load} = \frac{90}{20} = 4.5 \text{ amps}$$

2. Install current probe on current transformer primary (motor line current).

3. Install current probe on current transformer secondary at input terminals of CNT1064.

4. Install voltmeter on terminals 9 and 10 on TB1 of CNT1064. Set for VDC.

5. Remove plastic cover of CNT1064. Turn band width potentiometer (R7, B.W.) fully CCW. Then 1/8 turn CW.

6. Set percent load potentiometer to:

$$\frac{\text{Maximum input current to CNT1064}}{5} \times 100$$

Example: $\frac{4.5 \text{ amps}}{5} \times 100 = 90$

7. Set machine load selector switch to 100%.

Setup is complete. Proceed to calibration procedure.

CNT1064 Calibration:

1. Start machine. Monitor motor line current using current probe installed on current transformer primary. Run machine to full load.

2. Monitor current on current transformer secondary. At full load, this current should equal maximum input current to CNT1064 ± 1/2 amp.

3. Measure voltage on terminals 9 and 10. This voltage should be 18 VCD ± 1. Note the measured voltage.

4. With unit running at full load, monitor voltage on terminals 9 and 10. Reduce percent load potentiometer setting until voltage at terminals 9 and 10 decreases 10% from voltage noted in Step 3.

System Test:

With unit running at full load, reduce unit load selector switch to 80%. Line current should decrease to 80% of full load current ± 5%. Repeat at 60% and 40%. The current transformer system will automatically compensate for the change of desired load and maintain the maximum input current to the CNT1064.

If line current does not equal proper percentage when selector switch is reduced, additional equipment checkout may be required. Check wiring from current transformer through selector switch to CNT1064. Check contacts in selector switch for excessive wear, contamination or failure.

Parts Ordering Information:

Order one transformer replacement Kit for each affect unit from Table 4 below. This is an informational service bulletin. No parts or labor are authorized.

Table 4
Shows Current Ratio And Kit

Current Ratio	KIT #
100:5 - 150:5	2120
200:5 - 400:5	2121
500:5 - 800:5	2122
1000:5 - 1500:5	2123
1800:5 - 2500:5	2124

TRANE

General Service Bulletin

CTV-SB-88

Library	Service Literature
Product Section	Refrigeration
Product	Centrifugal Liquid Chillers
Model	CTV
Literature Type	General Service Bulletin
Sequence	88
Date	September 21, 1993
File No.	SV-RF-CTV-CTV-SB-88-993
Supersedes	New

Subject: 2K5B Relay Fail Safe Circuit Kit for Cutler Hammer Wye-Delta Starters With UCP695 Control Panels. (This is an informational bulletin only)

Introduction:

To understand the intent of this informational service bulletin, a brief review of the 2K5 pilot relay in a wye-delta starter follows.

During the starting sequence, the 2K5 pilot relay in a wye-delta starter is energized by the momentary closure of the K4 contacts in the 1U3 micro module. The 2K5 pilot relay coil is held in electrically by a holding circuit through one set of 2K5 contacts. A second set of 2K5 contacts close to energize the 2K3 contactor, and so on through the remaining wye-delta start sequence.

During the shut down sequence the 2K5 pilot relay is de-energized when one of the K1, K2 or K3 contacts in the 1U3 micro module is open. Once the 2K5 coil is de-energized, the holding 2K5 contacts open, a second set of 2K5 contacts open, and the run contactor is de-energized, stopping the compressor.

Since the Trane Company has a policy of continuous product improvement, it reserves the right to change specifications and design without notice. The installation and servicing of the equipment referred to in this booklet should be done by qualified, experienced technicians.

Discussion:

The 2K5 pilot relay is a pivotal component in starting and more importantly stopping the compressor if a problem should arise. In the current micro starter design there is one 2K5 pilot relay. In previous pre-micro starter designs two 2K5 pilot relays with a circuit breaker were incorporated in a fail safe arrangement.

In response to customer concerns Trane Company Engineering working with Cutler Hammer have developed a 2K5B relay fail safe circuit kit. This kit may be installed in any Cutler Hammer wye-delta starter where the customer requires the added insurance of the fail safe circuit. In the unlikely event one of the two 2K5 pilot relays fail a circuit breaker will trip and open the control circuit to the run contractor.

The intent of this bulletin is not to suggest adding a fail safe kit to all starters, but to provide information on the availability of the fail safe 2K5B relay kit for those customers who may require it.

Units Affected:

Any CVHE, CVHB or CVHF unit with a Cutler Hammer Starter that incorporates one 2K5 pilot relay.

INSTALLATION INSTRUCTIONS

Hardware Installation

The 2K5B fail safe relay kit (Figure 1) may be installed in any Cutler Hammer wye-delta starter. For all unit mounted starters refer to Figure 2 for proper location. For Size 3-5DP direct ship starters refer to Figure 3. For size 6 - 8 direct ship starters refer to Figure 4.

Figures 2 through 4 show the approximate locations of one pre-drilled hole in the back panel of the starter. This is the required location where the 2K5B relay is to be installed. A second hole must be drilled in the back panel in the appropriate location. Fasten the 2K5B relay kit to the back panel of the starter with 2 - #10 -32 self tapping screws.

Wiring Instructions

Wire 2K5B relay kit per drawing in Figure 5. Also refer to Table 1 for wire termination's.

Parts Ordering Information:

The 2K5B Fail Safe Circuit kit may be ordered through Trane Service Parts using a direct ship method from Cutler Hammer. The Cutler Hammer part number is 800612-206.

This service bulletin is informational only. No parts or labor are authorized.

© American Standard Inc.

Table 1 Wire Terminations

Starter Connections	Drawing Line Number	Fail Safe 2K5B Connections	Drawing Line Number
2TB1-4	17	A1-Coil	17
2TB1-2	17	A2-Coil	17
2TB1-8	18	N.O. Contact Terminal #13	18
N.O. 2K5 Contact	18	N.O. Contact Terminal #14	18
2TB1-3	19	Circuit Breaker Contact Terminal A	19
N.O. 2K5 Contact	19	N.O. contact Terminal #34	19
2TB1-3	19	N.O. Contact Terminal #43	23
2TB1-3	19	N.C. Contact Terminal #21	25
N.C. Contact of 2K5 Relay	23	N.O. Contact Terminal #44	23
N.O. Contact of 2K5 Relay	25	N.C. Contact Terminal #22	25
N.C. Contact of 2K5 Relay	23	Coil of Circuit Breaker Terminal C	24
N.O. Contact of 2K5 Relay	25	Coil of Circuit Breaker Terminal C	24
2TB1-2		Coil of Circuit Breaker Terminal D	24

Figure 1 - 2K5 Relay Fail Safe Circuit Kit

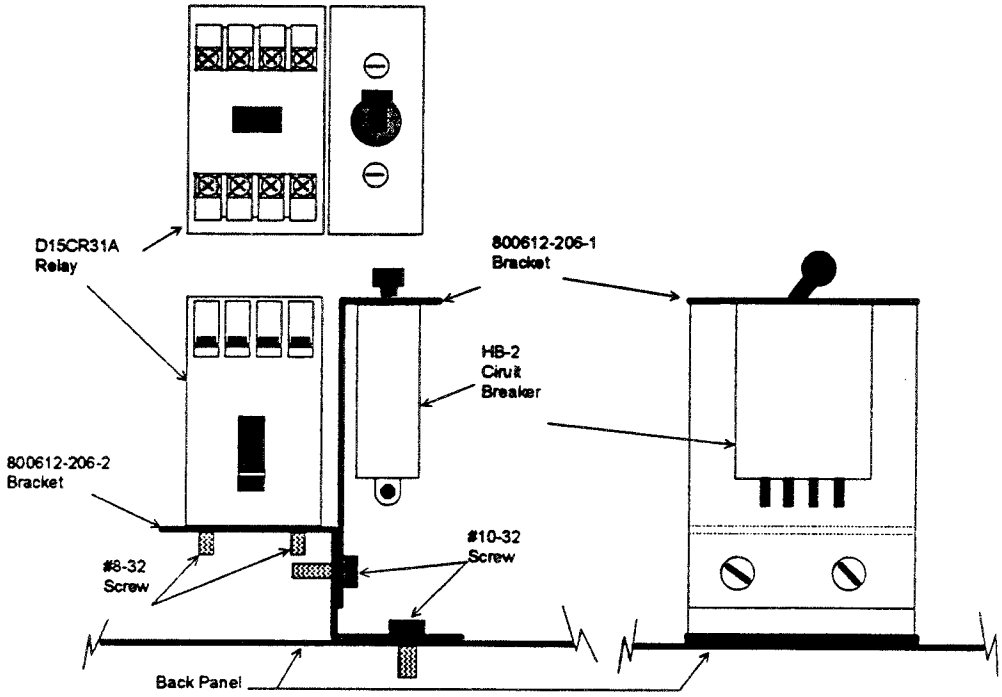

Figure 2 - Predrilled hole location for all Unit Mounted Starters

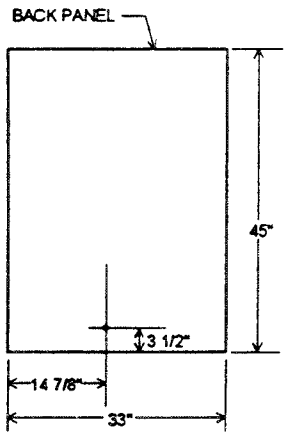

Figure 3 - Predrilled hole location for Size 3-5 DP (606 MAX RLA) Direct Ship Starters

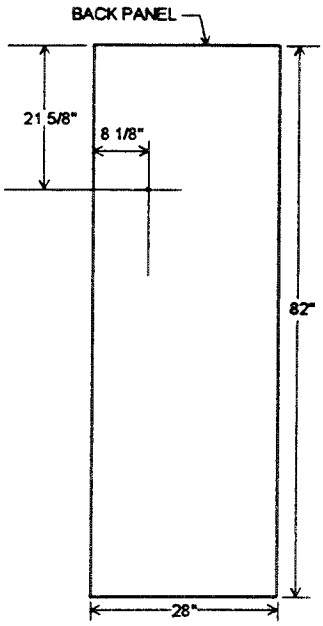

Figure 4 - Predrilled hole location for Size 6-8 (607-2100 RLA) Direct Ship Starters

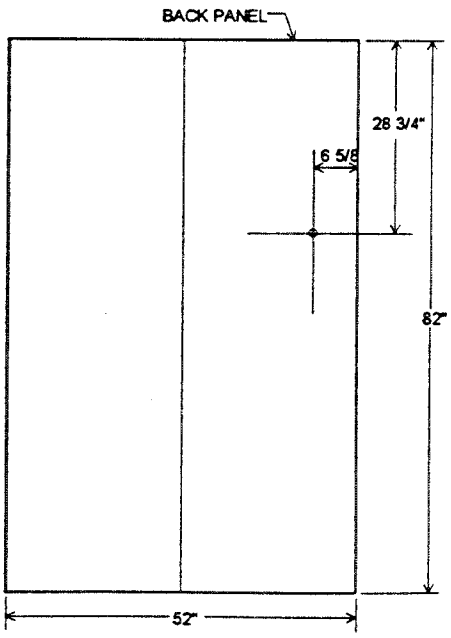

Figure 5

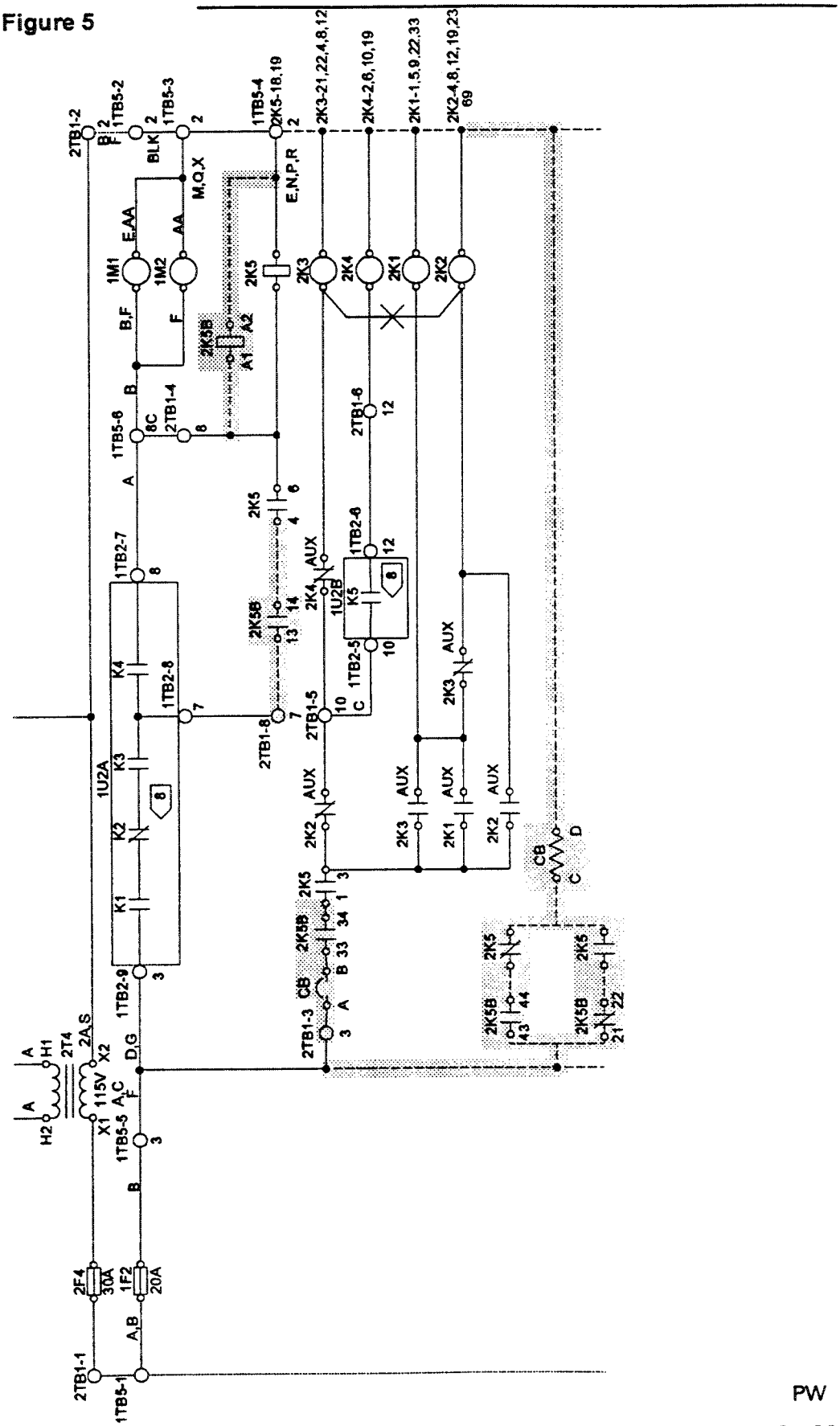
2TB1-2
1TB5-2
1TB5-3
1TB5-4
2K5-18,19
2K3-21,22,4,8,12
2K4-2,6,10,19
2K1-1,5,9,22,33
2K2-4,8,12,19,23
69
BLK
M,Q,X
E,N,P,R
E,AA
AA
1M1
1M2
B,F
F
2K5
2K3
2K4
2K1
2K2
2K5B
A1
A2
1TB5-6
2TB1-4
2TB1-6
1TB2-7
1TB2-6
1U2B
K5
AUX
2K5B
1TB2-8
1TB2-5
K4
K3
K2
K1
1U2A
2TB1-8
2TB1-5
2K3
2K2
2K1
CB
2TB1-3
1TB2-9
2T4
2A,S
X2
115V
X1
H1
H2
D,G
A,C
1TB5-5
2F4
30A
1F2
20A
A,B
2TB1-1
1TB5-1

PW

TRANE

General Service Bulletin

CTV-SB-89

Library	Service Literature
Product Section	Refrigeration
Product	Centrifugal Liquid Chillers
Model	CTV
Literature Type	General Service Bulletin
Sequence	89
Date	July 29, 1992
File No.	SV-RF-CTV-CTV-SB-89 7/92

Supersedes

Literature History

CTV-SB-89 (7/29/92) -- Original issue of bulletin - Update on handling and shipping refrigerant samples for analysis.

Subject: Handling and Shipping Refrigerant Samples for Analysis

Introduction:

This service bulletin presents general guidelines for proper handling and shipment of refrigerant samples submitted for laboratory analysis.

Discussion:

While the issue of proper refrigerant handling has always been a concern, it is especially timely, given the increased interest of the Environmental Protection Agency (EPA).

To ensure safe, legal handling and shipment of refrigerant samples submitted for laboratory analysis, it is important to recognize and address the potential safety hazards involved as well as the governmental regulations that apply.

In an attempt to clarify the requisites for proper refrigerant sample handling and shipment, this bulletin covers the following topics:

Since the Trane Company has a policy of continuous product improvement, it reserves the right to change specifications and design without notice. The installation and servicing of the equipment referred to in this booklet should be done by qualified, experienced technicians.

-- Safety Precautions for Handling Refrigerant
-- Cylinders Recommended for Refrigerant Sample Containment
-- Trane Laboratories Designated for Refrigerant Analysis
-- Labeling Requirements for Refrigerants for Refrigerant Sample Shipping Packages
-- Sources of Additional Information on Refrigerant Handling and Shipping

Safety Precautions for Handling Refrigerant

Before handling any refrigerant, it is important to become familiar with the appropriate Material Safety Data Sheet (MSDS).

In general, MSDS are to be in English and must include material identity (chemical and common names); ingredients in mixtures, if they are hazardous; physical and chemical characteristics; physical hazards (fire, reactivity); health hazards (signs and symptoms of exposure); medical conditions aggravated by exposure; primary route(s) of entry into the body; OSHA, ACGIH, and vendor exposure levels and TLVs; carcinogenicity statement per NTP, IARC, or OSHA; general precautions for safe handling and use; emergency-response procedures and first aid; and appropriate work practices. You should acquire a copy of the law and read it.

Under Occupational Safety and Health Administration Act (OSHA) Hazard Communication Rule, Title 29 Code of Federal Regulations (CFR) 1910.1200 MSDS sheets are to be supplied by the refrigerant manufacturer. The MSDS sheets must be available for review by all persons handling and/or using the refrigerants.

The following warnings are provided to alert you to potential hazards associated with handling refrigerant that could result in personal injury or death. Your personal safety depends upon the strict observance of these precautions.

WARNING! Breathing high concentrations of refrigerant vapor can sensitize the heart to adrenaline. This type of sensitization -- in conjunction with a large amount of adrenaline produced within the body (as can happen under stress)-- could result in arrhythmia, ventricular fibrillation, and -- ultimately -- death due to cardiac arrest.

WARNING! Skin or eye contact with the extremely cold, liquefied form of refrigerants with low boiling points, (R-12, R-22) can cause frostbite. Contact with refrigerants characterized by higher boiling points (R-11, R-113) dissolves the natural oils of the skin and may cause dermatitis.

Note: Wear lined butyl gloves and chemical splash goggles whenever handling refrigerant to avoid skin/eye contact and prolonged or repeated exposure. Normally, respiratory protection is not required unless a large release of refrigerant occurs.

WARNING! Use a suitable receptacle to ship refrigerant samples destined for laboratory analysis; see "Cylinders Recommended for Refrigerant Sample Containment". Remember that refrigerants expand significantly when heated.

To allow for refrigerant expansion, do not fill the cylinder to more than 3/4 of its capacity! If the cylinder is completely filled with refrigerant and sealed, any increase in temperature will cause an abrupt rise in refrigerant liquid pressure; in some instances, the rise in pressure may be high enough to deform or burst the cylinder. Such an explosion is extremely dangerous, and can result in serious personal injury or death.

WARNING! DO NOT UNDER ANY CIRCUMSTANCE SHIP REFRIGERANT SAMPLE CYLINDERS WITHOUT A SAFETY RELIEF DEVICE.

There are three general types of relief devices commonly used: fusible plug, rupture member, or pressure relief valve. Make sure the sample cylinder is equipped with a relief device before using.

 © American Standard, Inc.

Cylinders Recommended for Refrigerant Sample Containment

An important aspect of safe handling and shipment of refrigerant samples is selection of the cylinders used to store the refrigerant. Trane's Chemistry Laboratory, located in La Crosse, recommends the use of any of the cylinders identified below (or an equivalent receptacle). For general sampling, aluminum or stainless steel cylinders are suitable. However, if a refrigerant sample is taken from a unit with a motor burnout, use only stainless steel. The acidic components that result from a motor burn will attack the aluminum cylinder material. Steel sample cylinders are not recommended for laboratory test sampling due to the possibility of internal rust contamination.

Also, listed here is a pressure-regulating valve. Each refrigerant sample cylinder must include a pressure-relief valve!

Recommended Cylinders:

[ ] 500 cc cylinder
Source: Minnesota Valve & Fitting Company
15901 W 78th Street
Eden Prairie, MN 55344
Phone -- (612) 937-1160
Order No. 304L-HDF4-500

[ ] 1,000 cc cylinder
Source: Minnesota Valve & Fitting Company
Order No. 304L-HDF4-1000

[ ] 10-oz. Aluminum Lecture Bottle
Source: Cliff Impact Division
Parker Hannifin Corp.
33800 Lakeland Blvd.
East Lake, OH 44094
Bottle order No. AL440 No. 1749
Valve order No. Cliff Part # VI

Note: Cylinders used to transport refrigerant must be manufactured in accordance with Department of Transportation (DOT) regulations. All of the cylinders identified above comply with these regulations.

Recommended Pressure Relief Device

[ ] Pressure regulator
Source: Minnesota Valve & Fitting Company
Order No. SS-16DKM4-F4-A-1

WARNING: Reusing refrigerant sample cylinders for other types of refrigerants is not recommended since refilling and repressurizing the cylinders can be dangerous. If reuse of the cylinder is unavoidable, be sure to clean the cylinder thoroughly before refilling it with any other substance.

To insure accurate analysis of a refrigerant sample, use only clean and standardized sample bottles. The use of unorthodox or homemade sample bottles is not recommended; the use of such a bottle may result in a contaminated sample and/or skewed test results.

To aid the laboratory in conducting an accurate refrigerant analysis, the refrigerant sample bottle should be labeled with its evacuated TARE weight.

[ ] Recommended Cylinder Cleaning Procedure:
Remove valve from sample bottle.
Flush bottle with suitable solvent numerous times to remove all contaminants.
Visually inspect the bottle side walls and bottom to ensure all contaminants as well as solvent are removed.
Flush bottle valve with solvent to remove any contaminants that may be present in the valve seat area.
Ensure bottle and valve are free of any residual liquid solvent.
Re-install valve on cylinder following the manufacturer's instructions.
Evacuate sample bottle for one-minute minimum.

Trane Agencies Designated for Refrigerant Analysis

Once a refrigerant sample is obtained and stored in a suitable cylinder (with pressure regulator), it must be sent to the appropriate Trane agency for laboratory analysis. At present, refrigerant analyses are performed at two locations based on refrigerant type:

1. CFC-12, CFC-22. Trane's Chemistry Laboratory, located in La Crosse, WI, performs in-warranty chemical analyses of high-pressure refrigerants (e.g., CFC-12 and CFC-22) only. Out-of-warranty analyses of CFC-12 and CFC-22 are also conducted as time permits. (The cost associated with an out-of-warranty analysis is determined when the analysis is completed.)

Chemical analyses for HCFC-123 are also done in the La Crosse Chemical Laboratory.

Use the following "ship to" address to submit CFC-12 and CFC-22 refrigerant samples for analysis:

The Trane Company
Chemistry Lab - Building 11
2313 South 20th Street
La Crosse, WI 54601-7599

2. CFC-11, CFC-113. Chemical analyses of low-pressure, refrigerants only (e.g., CFC-11 and CFC-113) are performed by Trane ServiceFirst. The "ship to" address is:

Trane ServiceFirst
Attn: Chemistry Lab
4500 Morris Field Drive
Charlotte, NC 28208

Labeling Requirements for Refrigerant Sample Shipping Packages

To comply with DOT regulations, special identification requirements must be met on all shipped packages containing refrigerant cylinders - - and on the associated shipping papers and bills of lading. Basic labeling requirements for shipment of CFC-11, CFC-12, CFC-22 and CFC-113 samples over domestic highways are outlined below. (If some other method of transportation is used, contact a local carrier for shipping information.)

Note: Besides using the proper nomenclature on the shipping package and accompanying paperwork, it is also necessary to include a copy of the appropriate "Material Safety Data Sheet" (MSDS) with each shipment of refrigerant. Copies of the current safety data sheets for CFC-11, CFC-12, CFC-22 and CFC-113 are included at the end of this bulletin for your convenience. As you prepare a refrigerant sample for shipment, be sure to xerox a copy of the appropriate MSDS and attach it to the bill of lading.

[ ] **CFC-11 Sample Identification.**
Bill of lading must be marked with the following:

Compressed Gas, N.O.S.;
nonflammable gas;
Trichlorofluoromethane (CFC-11);
UN No. 1956

Shipping package must be marked as follows:

Compressed Gas, N.O.S.;
Trichlorofluoromethane (CFC-11);
UN No. 1956

A green **"NONFLAMMABLE GAS"** label must also be applied to the package exterior.

[ ] **CFC-12** Sample Identification.
Bill of lading must be marked with the following:

Dichlorodifluoromethane (CFC-12);
nonflammable gas;
UN No. 1028

Shipping package must be marked as follows:

Dichlorodifluoromethane (CFC-12);
UN No. 1028

A green **"NONFLAMMABLE GAS"** label must also be applied to the package exterior.

[ ] **CFC-22** Sample Identification.
Bill of lading must be marked with the following:

Chlorodifluoromethane (CFC-22);
nonflammable gas;
UN No. 1018

Shipping package must be marked as follows:

Chlorodifluoromethane (CFC-22)
UN No. 1018

A green **"NONFLAMMABLE GAS"** label must also be applied to the package exterior.

[ ] **CFC-113** Sample Identification.
Bill of lading must be marked with the following:

Compressed Gas, N.O.S.;
nonflammable gas;
Trichlorotrifluoroethane (CFC-113);
UN No. 1956

TRANE

Confidential Service Bulletin

CTV-CSB-90

Library	Service Literature
Product Section	Refrigeration
Product	Centrifugal Liquid Chillers
Model	CVHE/CVHF
Literature Type	Confidential Service Bulletin
Sequence	90
Date	February 22, 1994
File No.	SV-RF-CTV-CTV-CSB-90-294
Supersedes	New

This Confidential Service Bulletin provides special warranty policy and/or service expense information for use by Trane Warranty Representatives.

Related problem description and corrective action information are also contained in this Confidential Service Bulletin, a General Service Bulletin will not be published.

Subject: CVHE/CVHF UCP2 Module Update

Introduction:

The purpose of this service bulletin is to provide information concerning UCP2 chillers that shipped without one or more UCP2 modules, and the requirement to order and install the modules.

Discussion/Units Affected:

Units that shipped between August 9, 1993 and December 31, 1993 may have shipped without an options module, TCI Com 3 module, or I.O. module. Additional units will be shipping without the I.O. module until April of 1994. This bulletin covers units that shipped short one or more of the above modules. A list of units affected and the material that needs to be ordered by the office parts department will be sent to the office service manager under seperate cover.

Since the Trane Company has a policy of continuous product improvement, it reserves the right to change specifications and design without notice. The installation and servicing of the equipment referred to in this booklet should be done by qualified, experienced technicians.

Module Update Procedure

All factory wiring and connectors have been provided in the control panel by the factory. Mount the new modules in the space provided in the control panel as shown in Figure 1. We are requesting that all work be completed at startup or as soon as possible, before the June 30, 1994 cut-off date. The required modules should be ordered through Trane Service Parts using the normal parts ordering procedure.

Figure 1
Control Panel

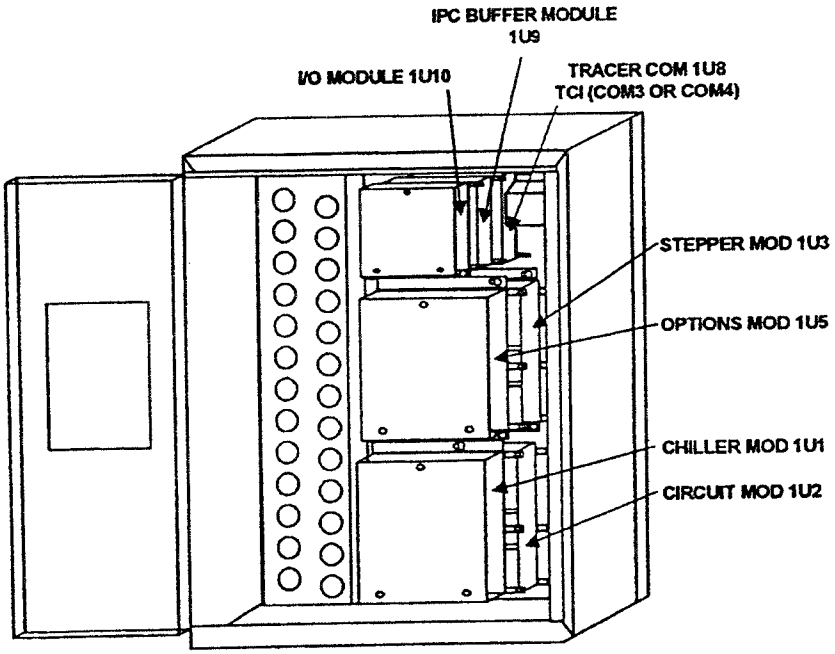

Parts Ordering Information and Authorization:

Following is a breakdown of the modules that are required for the affected units.

1. Units requiring a TCI Com 3 (Tracer 100 Interface) module (MOD 0073) to be installed, also require a new chiller module (MOD 0091), and a new clear language display module (MOD 0092). These modules are available now to order and install. The TCI Com 3 module mounts to the backplate with #8-32 x 1/2 thread rolling screws.

2. Units that are not free cooling that shipped short an options module, require a new options module (MOD 0093) only. This module is available now to order and install.

3. Free cooling units that are either short or have an options module (MOD 0093) require a new options module (MOD 0093), chiller module (MOD 0091) and clear language display module (MOD 0092).

   Note: These modules will be available May 1, 1994 to order and install.

© American Standard Inc.

4. Hot gas by-pass units with an I.O. module, will require a new I.O. module (MOD 0074), clear language display (MOD 0092) and a chiller module (MOD 0091). Units that shipped from August 9, 1993 through December , 1993, will require the modifications shown in Figure 2 to install and hook-up the new I/O module.

   Note: These modules will be available May 1, 1994 to order and install.

Note: The reason for changing additional modules when a unit shipped short only one module is for software compatibility.

Modifications Required to install the new I.O. module.

1. **J1 Terminal:** With existing wire and connector, connect from J1 of the New I.O. module to J1 terminal of one of the other modules in the daisy chain, such as the stepper module.
2. **J2 Terminal:** Existing wire and connector plugs into J2 of the new module.
3. **J4 Terminal:** of the old module connects to J8 of the new module using existing wire and connector.
4. J28 of the old module connects to J6 of the new module. You will need to splice in an extra length of 16 AWG, 600V, 105°C, wire to reach.

Figure 2 I/O Module Wiring from August, 1993 to December, 1993

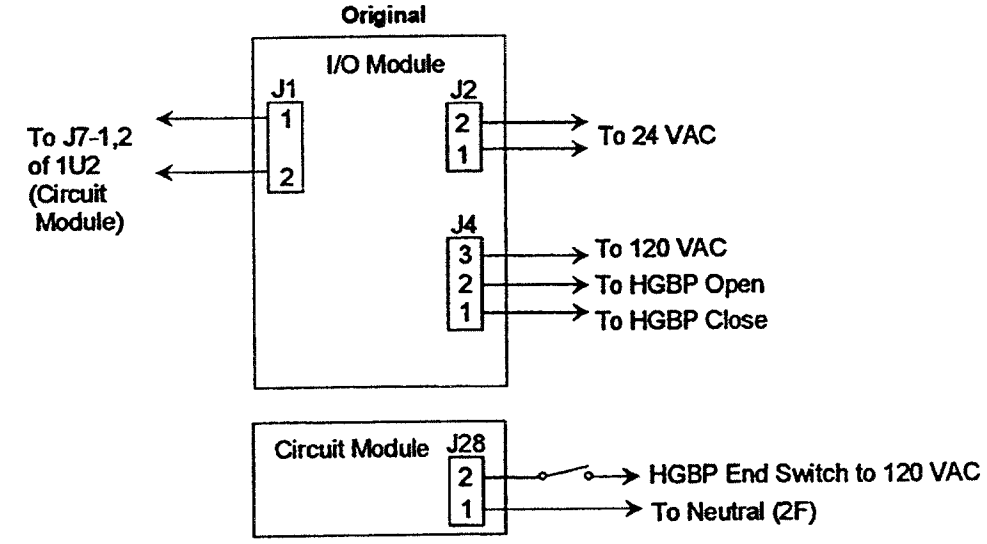

I/O Module Wiring from January, 1994 to present.

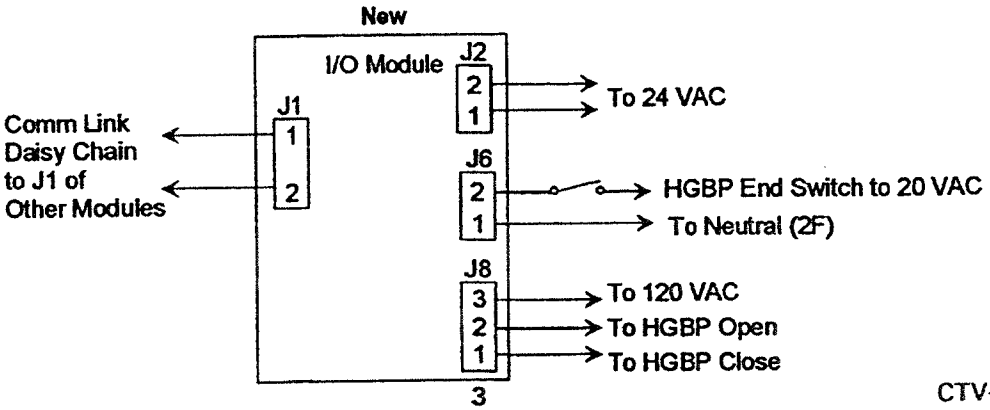

CTV-CSB-90

5. Mounting Plates

5.1 A large mounting plate is required to mount the options module to the stepper module. The plate should have shipped with the unit. However, if required order part number PLT 2153.

5.2 A small mounting plate is required to mount the IO module. The plate should have shipped with the unit. However, if required order part number PLT 2154.

6. Wire Connectors

All factory wiring has been provided with the required Phoenix wire connectors. Field wiring will require appropriate connectors to be ordered and installed.

Mnemonic Part Number	Code Number	Connector
CON 0429	X19220085-01	2 pin
CON 0430	X19220085-02	3 pin
CON 0431	X19220085-03	4 pin
CON 0432	X19220085-04	5 pin
CON 0433	X19220085-05	6 pin

Labor and Travel Authorization:

This service bulletin authorizes 1.0 man hour per unit on affected chillers, plus actual travel time for each unit. Authorized hours and actual travel time will be paid at approved Commercial Systems Group rates. All claims must be submitted on the "Service/Warranty/Sales Allowance Claim" (Form No 1-30.09-2), within 30 days of repair. To receive proper credit check the "Retrofit Box" on the claim form and refer to this service bulletin.

Material Disposition:

Upon completion of the upgrade, the original UCP2 modules must be returned to La Crosse per the following instructions.

1. Return all modules to:
   The Trane Company
   Plant 4 Salvage
   2411 East Avenue
   La Crosse, WI 54601
2. Return all modules on a job by job basis. Do not wait to complete all updates before returning replaced modules.
3. Mark the outside and inside of each box **"Per CTV-CSB-90"**
4. On units that have not yet been started mark the modules **"NEW"**.
   On units that have previously run mark the modules **"USED"**.

Cut-Off Date

To acquire credit for this bulletin, all claims must be received in La Crosse no later than June 30, 1994. Any exceptions to these guidelines require written authorization of La Crosse Technical Service.

PW

Printed by INLAND GRAPHICS, Inc., La Crosse

TRANE

General Service Bulletin

CTV-SB-91A

Library	Service Literature
Product Section	Refrigeration
Product	Centrifugal Liquid Chillers
Model	CTV
Literature Type	General Service Bulletin
Sequence	91A
Date	May 4, 1994
File No.	SV-RF-CTV-CTV-SB-91A-594
Supersedes	CTV-SB-91

Subject: HCFC-123 Engineered Conversion Requirements

Introduction:

The purpose of this bulletin is to provide general guidelines for the proper completion of a HCFC-123 "Engineered Conversion".

Recommended Action:

WARNING: To prevent injury or death due to electrical shock or contact with moving parts, lock unit disconnect switch in open position.

1) Close all chilled water and condenser water supply and return valves and drain the water boxes. Open all electrical disconnects and verify the power has been removed.

WARNING! To avoid injury or death due to inhalation of, or skin exposure to refrigerant, closely follow all safety procedures described in the Material Safety Data Sheet for the refrigerant and to all labels on refrigerant containers. Certain procedures common to refrigeration system service may expose operating and/or servicing personnel to liquid and/or vaporous refrigerant.

2) Remove all of the refrigerant charge using UL approved recycling equipment and follow proper handling procedures. Once the refrigerant charge has been removed to the required vacuum level established for low pressure refrigerant recovery, continue to evacuate chiller to 2.5 millimeters.

Since the Trane Company has a policy of continuous product improvement, it reserves the right to change specifications and design without notice. The installation and servicing of the equipment referred to in this booklet should be done by qualified, experienced technicians.

3) Bring unit pressure back to atmosphere using dry nitrogen.

4) Set up proper rigging and begin unit disassembly. As components are being removed record all tolerances and match mark them so they may be reassembled in their original position. Make sure all items removed from the unit are properly covered and protected from rusting.

Note: CVHE Units
a) The casing parts should be scribed on both sides so they can be realigned properly during reassembly. This will insure the suction elbow will fit properly without causing misalignment of the compressor.

b) If the third stage volute (CVHE's) was not originally doweled it will be necessary to add dowel pins in order to insure proper realignment. See service bulletin CVHE-SB-10 for details.

5) Meggar test the new motor, check shaft runout, and end play (if appropriate) before proceeding with the compressor rebuild.

Note: CVHE Units
a) Particular attention should be given to the original tolerance of the oil seal assembly. The allowable (total) clearance between the shaft and the oil seal should be between .004 - .007". The clearance radially should be no more than .002 - .0035". Clearance in excess of this may lead to oil loss problems. If the seal is beyond the allowable clearance it should be replaced!! See Service Bulletin CVHE-SB-26.

Note: PCV or CV Units
a) When converting a PCV or CV unit from an old style motor to the newer liquid cooled rotor designs it will be necessary to make piping modifications. This applies when changing from a RCS style motor to a RPS or RVS style or from a RCC to the RVX style. Refer to service bulletins PCV-SB-3 and CV-SB-4.

b) The excess refrigerant drain line on the RPS and RVS style motors should have a filter screen installed per service bulletin CVHA-SB-11 or as explained in section 8.10.1 of Service Guide CTV-SG-1.

6) Drain the oil sump thoroughly and dispose of the waste oil in a manner consistent with all state, federal and local regulations for disposal of oil. Disassemble the oil sump head and clean the inside of the sump. The oil sump at this point should be modified to provide the necessary fittings to add an eductor assembly if necessary to insure proper oil return. See the section of this bulletin that describes Unit Modifications and Enhancements. Replace the oil pump motor if required and rebuild or replace the oil regulating valve. Reassemble the oil sump.

7) Drain oil from the oil filter assembly and remove the filter. Place used oil filter in resealable container. Follow all state, federal and local regulations for disposal of filter. Clean the filter holder and install a new filter or element. At this point you may want to install ball valves similar to the current CVHE's to help facilitate future oil filter changes. See service bulletin CTV-SB-19.

8) Reassemble compressor making sure all components are installed properly. Record all tolerances. Clean all casing parts thoroughly to remove all previous o-ring sealing compound. The compressor o-rings should be coated with Loctite 515 Gasket Eliminator, except the elbow to compressor joint. Gortex joint sealant (1/8" width) should be used for this joint. See service bulletin CTV-SB-66 for information on using and applying the sealant.

9) Always replace the existing oil drain hoses with the new ones provided in the conversion package. It is recommended that the hose clamps be inspected and new ones used when necessary. Using two clamps for the bottom connection on the oil drain line is advised.

© American Standard Inc.

10) It is probably advisable to disassemble all threaded pipe joints while doing a major overhaul or conversion on an older chiller. The joints should be cleaned and resealed using a thread sealing compound compatible with either refrigerant CFC-11 or HCFC-123. Threaded pipe joints on current production chiller units use either Loctite 277 or La-Co Slic-Tite paste with Teflon, except where the joint is close to a braze connection and may be subjected to extreme heat. Where heat is a major concern Teflon tape is currently being used. The Loctite 277 thread locker compound has been approved for use as a pipe sealer in this application and requires approximately 24 hours set time before being exposed to refrigerants. Set time before exposure will likely be a requirement for most of the pipe sealing compounds available today. There are undoubtedly many other pipe sealing compounds that are compatible in this type of application with refrigerants CFC-11 and HCFC-123. Before using other thread sealers check with the manufacturer of the compound to verify compatibility and reliability through laboratory testing and field experience in use.

11) Motors should be air run without impellers to measure oil flows and check for vibration. Refer to service bulletin CTV-SB-13. Run motors at reduced voltage if the starter type will allow. Do not run motors more than 10-15 minutes. The motor should be allowed to cool before additional runs are made.

Note: Units with factory or field installed electrically actuated hotgas bypass or free cooling valves may require rebuild or replacement. Prior to 1994 the Trane Company used four different valve manufacturers.

A. Valves manufactured by Posi-Seal (1), will in most cases require rebuild kits in order to be made compatible. There were a few Posi-Seal valves manufactured with resilient internal seats that will require complete valve replacement since new seats are not available in a compatible material.

B. Valves manufactured by Keystone(2) and Jamesbury (3) are compatible.

C. In a very limited number of units Dover-Norris (4) valves were also used. The Dover-Norris valves are not compatible and must be replaced since rebuild kits are not available.

In all cases the unit should be inspected to determine the valve manufacturer and their model numbers. This information is necessary in order to insure the correct material or valves are furnished and to determine what work will be required.

Note: Units with pnuematically actuated hot gas valves have stem seals and other internal components that are compatible. In all cases we recommend new flange gaskets be used.

12) ORIFICE REPLACEMENT:

a) PCV,CVHA,CV,CVHB:
When a new set of orifices are required for these model units the conversion package will include a new set of distributor plates for installation in the condenser and evaporator liquid lines. The package also includes a drawing that highlights the new well rounded orifice diameter that will be required. The well rounded orifice (both) should be enlarged by using a proper diameter steel Hawg cutter, a tapered reamer or a die grinder with carbide bur to increase the size to the new specified diameter. Discard the old distributor plates and install the new ones provided.

b) CVHE: When orifices are required new orifice assemblies will be provided for the condenser liquid line, evaporator liquid line, and the economizer. For units which do not have the removable orifice option it will be necessary to remove the entire liquid sump from the bottom of the economizer. Once the sump is removed the orifice welds must be ground away so the new orifice can be installed. Make sure the new orifice is welded into the economizer to the same depth as the original to insure there will be no restrictions to flow. The sump should be welded back onto the economizer.

13) ADDITIONAL UNIT MODIFICATIONS AND ENHANCEMENTS:

a) All Units: It is advisable to add the necessary fittings so that an InterClean system can be added to the chiller to remove any small amounts of debris (typically rust) or old compressor oil etc., that may still be left in the unit after the conversion is completed. Once a system is clean and there is no concern about contaminating the oil sump with the old oil or other debris an oil return eductor may be connected direct to the sump if oil loss becomes a problem. Oil loss can occur in some chillers due to unusual operating conditions such as cold tower water temperatures and light loads etc. The fittings that are added for connection of an InterClean system can also be used as access points for future use of recovery equipment etc. when servicing the chiller.

b) PCV,CVHA,CV,CVHB: If an oil return eductor system is to be installed follow the procedures in service bulletin CTV-SB-68.

Note: For units with the older RCS style motor an additional oil sump vent line to the evaporator will be required.

c) CVHE: Older style CVHE's that had the oil sump vent line connected to the suction elbow should be repiped per service bulletin CVHE-SB-26 to include a vent line solenoid valve and a larger 1-1/8" line. The larger vent line, solenoid valve, and timer should be installed on all units. CVHE units should be modified to have two eductors similar to new production units. One is used to return oil from the suction cover and the other returns oil directly from the evaporator. Make sure that the system is clean so that debris does not get into the sump as indicated above.

d) CV,CVHB: The oil sump vent line valve should be located on the suction elbow per service bulletin CVHB-SB-2. An oil return line from the suction cover to the oil sump as described in this bulletin should also be added.

Note: For CVHE's which use the DRV 5 1740 frame motors a larger motor cooling orifice should be used as per service bulletin CVHE-SB-29.

14) Make sure that all other field added components such as liquid level indicators, head pressure controls, etc. have been reviewed for compatibility.

Note: CVHE Units
At this point CVHE units should be air run with and without the suction elbow to insure proper balance. See service bulletin CVHE-SB-18 for additional information on vibration testing CVHE chillers.

15) Once the unit has been reassembled it should be pressure tested using dry nitrogen and soap solution. All leaks should be repaired, the unit should be evacuated to 2.5 millimeters. Once evacuated the chiller will be required to pass a standing vacuum rise test.

16) Inspect the equipment room to insure the requirements of ASHRAE Standard 15 have been met. This will require:
    1. A refrigerant monitor
    2. Self Contained Breathing Apparatus (SCBA)
    3. Ventilation
    4. The purge relief be piped into the rupture relief vent line to outside the building.

17) Refill the chilled and condenser water systems.

18) Charge the chiller with the new refrigerant. Refer to service bulletin CTV-SB-60 for proper refrigerant charge. Make sure vapor only is charged until the unit pressure is above the vapor pressure equivalent to the freezing point of water. Always run the evaporator pump while charging the unit to prevent freeze-ups from occurring.

19) Run the unit and log it for proper operation. If an InterClean has been installed the refrigerant angle valve on the liquid supply line should be adjusted to maintain a proper level in the tank. If an eductor has been connected directly to the oil sump it may be necessary to adjust the volume of flow to insure the oil sump temperature does not drop too low from excessive refrigerant flow. After cleanup the InterClean or the eductor system can be turned off and only used if future oil migration occurs due to unusual operating conditions etc.

20) Instruct the facilities operating personnel on proper procedures to follow when operating the chiller, the requirements for safely handling refrigerants, and the maintenance of the chiller and ancillary equipment such as the monitor etc.

Note: Always refer to the latest revisions of the service bulletins referenced.

PW

Printed by INLAND GRAPHICS, Inc., La Crosse

TRANE

Confidential Service Bulletin

CTV-CSB-92

Library	Service Literature
Product Section	Refrigeration
Product	Centrifugal Liquid Chillers
Model	CVHB, CVHE
Literature Type	Confidential Service Bulletin
Sequence	92
Date	July 20, 1994
File No.	SV-RF-CTV-CTV-CSB-92-794
Supersedes	New

Literature Changes:
CTV-CSB-92 (7/94)--Original issue of Confidential Service Bulletin.
No General Service Bulletin Published.

Subject: CVHE/CVHF UCP2 PHASE C MODULE UPDATE

Introduction:

The purpose of this confidential service bulletin is to provide information concerning UCP 2 chillers requiring Phase C software.

Discussion/Units Affected:

Phase C software has now been released for the following options: Hot Gas By-pass, Free Cooling, Tracer Comm4, TCI-Printer Module and Evap/Cond. GPM & Chiller Tons Option (WFCH or WFCL). This bulletin covers units that shipped short one or more of these modules. A list of affected units and the material that needs to be ordered by the office will be mailed to each appropriate service manager under separate cover letter.

Module Update Procedure:

All factory wiring and connectors have been provided in the control panel by the factory. Mount the new modules in the space provided in the control panel as shown in Figure 1. We are requesting that all work be completed as soon as possible, before the **October 31, 1994** cut-off date. The required modules should be ordered through Trane Service Parts using the normal parts ordering procedure.

Since the Trane Company has a policy of continuous product improvement, it reserves the right to change specifications and design without notice. The installation and servicing of the equipment referred to in this booklet should be done by qualified, experienced technicians.

Figure 1
Control Panel

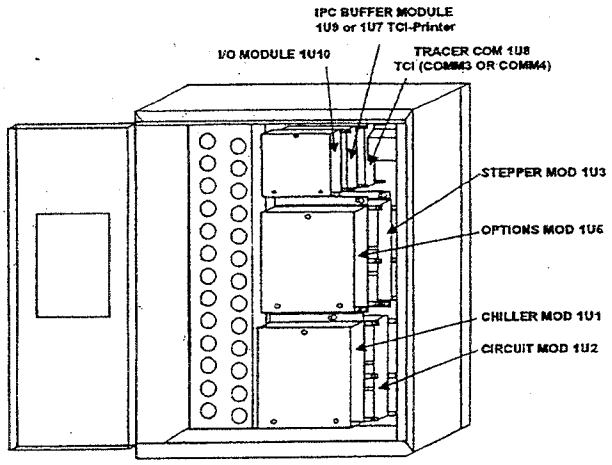

Parts Ordering Information And Authorization:

Following is a breakdown of the modules required for the affected units.

1. **Hot Gas By-Pass**——See Service Bulletin CTV-CSB-90 for installation.
   Modules required are CLD (MOD-0155), IO (MOD-0074) Chiller (MOD-0126)

2. **Free Cooling**————See Service Bulletin CTV-CSB-90 for installation.
   Modules required are CLD (MOD-0155), OPT (MOD-0170), Chiller (MOD-0126)

3. **Printer Interface Option:** Order TCI-Printer Module MOD-0152, Clear Language Display Module MOD-0155and Chiller Module MOD-0183.

4. **TCI-Comm4 to support Tracer Summit:** Order TCI-Comm4 Module MOD-0173 and a Clear Language Display and Chiller Module based on the following information:

   (A) If the unit is a Phase B shipment, Dec 13, 1993 to July 19, 1994 with a Clear Language Display Part Number X13650448-02 or newer and a Chiller Module with Part Number X13650450-03 or newer, then you do not require new Clear Language Display and new Chiller Module (Only Comm4 MOD-0173).

   (B) If the unit is a Phase A shipment, August 9, 1993 to December 13, 1993, then you need to order a new Clear Language Display Module MOD-0155 and a new Chiller Module MOD-0183 in addition to the Comm4 MOD-0173.

5. Units with Evap/Cond. Gpm & Chiller Tons Option (WFCH or WFCL) require a new Chiller Module MOD-0183 and a new Clear Language Display Module MOD-0155.

6. **Mounting Plates:**

   6.1 A large mounting plate for mounting the Chiller Module shipped with the original panel. However, if required, order Part Number PLT-2153.
   6.2 A Small mounting plate is required to mount the TCI-Printer Module. Order Part Number PLT-2154.

©American Standard Inc. 1994

7. **Wire Connectors:**
   All factory wiring has been provided with the required Phoenix Connectors. Field wiring will require appropriate connectors to be ordered and installed.

Mnemonic Part Number	Connector
CON-0429	2-PIN
CON-0430	3-PIN
CON-0431	4-PIN

Labor and Travel Authorization

This service bulletin authorizes 1.0 Man Hour per unit on affected units, plus actual travel time for each job. Authorized hours and actual travel time will be paid at approved commercial systems group rates. All claims must be submitted on the "Service/Warranty Sales Allowance Claim" (FORM NO. 1-30.09-2), within 30 days of the repair. To receive proper credit, check the "Retrofit Box" on the claim form and refer to this service bulletin.

Material Disposition:

Upon completion of the Phase C upgrade, any original UCP2 modules must be returned to La Crosse per the following instructions.

1. Return all modules to:

   The Trane Company
   Plant 4 Salvage
   2411 East Avenue
   La Crosse, WI 54601

2. Return all modules on a job by job basis. Do not wait to complete all updates before returning replaced modules.
3. Mark the outside and inside of each box "Per service bulletin CTV-CSB-92."
4. On units that have not yet been started, mark the modules "New".

Cutoff Date

To acquire credit for this bulletin, all claims must be received in La Crosse no later than October 31, 1994.
Any exceptions to these guidelines, require written authorization from La Crosse Technical Service.

Printed by Inland Printing, Inc.
La Crosse, WI

TRANE

General Service Bulletin

CTV-SB-97

Library	**Service Literature**
Product Section	**Refrigeration**
Product	**Centrifugal Liquid Chillers**
Model	**CVHE, CVHF, CVHG**
Literature Type	**General Service Bulletin**
Sequence	**97**
Date	**October 28, 1996**
File No.	**SV-RF-CTV-CTV-SB-97**
Supersedes	

Literature History: CTV-SB-97 - Original issue of bulletin - October 1996

Subject: Redesigned Lubrication System for CVHE/F/G

Introduction:

A redesigned lubrication system is being used in production for the CVHE,F, and G centrifugal machines. (See Figure 2 & Figure 8).

Units Affected:

Beginning with design sequence 2K for the CVHE, L0 for the CVHG and U0 for the CVHF machines, the redesigned lubrication system is incorporated.

Discussion:

Lube System Overview

The new lube system incorporates the following features:

- One rotary valve is used to allow the following operation modes: run, filter drain, and filter change. (See Figure 1).
- The oil pressure regulator and oil filter is integral to the tank cover assembly. See Figure 2.
- Only two joints to the lubrication system and they are bolted, gasketed, flanged joints.
- Better visual display of the oil level indication through the use of aluminum balls incorporated in the sight glass which float when oil is present. See Figure 3.
- Better access through the oil tank cover to allow removal and/or replacement of the oil mist eliminator.
- Reduced number of manufactured joints will reduce field leaks.

©American Standard Inc. 1996

Since the Trane Company has a policy of continuous product improvement, it reserves the right to change specifications and design without notice. The installation and servicing of the equipment referred to in this booklet should be done by qualified, experienced technicians.

Operating the New Lube System

The operation of the new system is identical to the old system. Oil is pumped from the oil tank (by a pump and motor located within the tank (see Figure 4) through an oil pressure regulating valve designed to maintain a net oil pressure of 12 to 18 psid. It is then filtered and sent to the compressor motor thrust bearing and to the motor journal bearing through the oil cooler (if so equipped). The oil filter assembly incorporates a rotary valve to isolate the oil filter from the unit during filter replacement. (See Figure 1).

Lube System Maintenance

Reference service bulletin CTV-SB-19D for recommendations for oil analysis and oil sampling procedures. Replace the oil filter annually, at each oil change, or anytime erratic oil pressure is experienced during chiller operation.

Oil Filter Replacement Procedure

Use the following procedure to service the oil filter. (Refer to Figure 8):

1. Run the oil pump for two to three minutes to insure that the oil filter is warmed up to the oil sump temperature.

2. Turn the oil pump motor off.

3. Pull the "D" handle on the rotary valve locking pin out of its detent and rotate the valve to the "DRAIN" position. (See Figure 5). An offset pointer is located on the top of the valve with wrench flats to allow turning. The spring force on the locking pin should allow the pin to drop into a detent at this position. (See Figure 6).

4. Allow at least 15 minutes for the oil to drain from the filter back into the oil sump.

5. Pull the "D" handle to unlock the pin and rotate the valve to the "CHANGE FILTER" position. (See Figure 7). This isolates the filter from the unit. The locking pin should drop into a detent in this position.

6. Remove and replace the filter as quickly as possible. Place the used filter in a resealable container. Follow all local, state and federal regulations to dispose of the filter.

7. Pull the "D" handle to unlock the pin and rotate the valve to the "RUN" position. The locking pin should drop into a detent in this position. (See Figure 1). The chiller is now ready for operation.

Lubrication of the Rotary Valve

The rotary valve uses dual o-rings to seal to atmosphere. A small pipe plug located above the oil filter is provided to allow manual lubrication to these o-rings. To prevent o-rings from drying out and leaking, at least once a year or more often if desired, remove the pipe plug and place a few drops of Trane Oil-0022 in the cavity. This will provide proper lubrication to the o-rings. **Be sure to reinstall the pipe plug when lubrication is completed.**

Adjusting the Oil Pressure Regulator

The oil pressure regulator is identical to the previous design oil system except that it is located on the oil tank head directly. To adjust the oil pressure, remove the seal cap to this valve and turn the stem clockwise to increase pressure or counter-clockwise to decrease the net oil pressure. Make adjustments as quickly as possible. A slight amount of refrigerant leakage/air leakage may occur when the cap is not sealing the valve. **Be sure to secure the cap tightly on the valve when adjustment is completed.**

Optional Dual Oil Filter System

As an option, a dual oil filter assembly is available. This is essentially two complete oil filter assemblies each with its own oil pressure regulator and rotary isolation valve. The following procedure should be followed:

1. Both valves should normally be in the "RUN" position.

2. After the operator throws the toggle switch to switch the active valve assemblies, the following action should be taken on the inactive valve assembly (clogged filter):

   a) Pull the "D" handle on the rotary valve locking pin out of its detent and rotate the valve to the "DRAIN" position. Release the "D" handle and the locking pin should engage a detent in this position.

   b) Allow at least 15 minutes for the oil to drain from the filter into the oil sump.

   c) Pull the "D" handle to unlock and pin and rotate the valve to the "FILTER CHANGE" position. Release the "D" handle and the locking pin should engage a detent in this position.

   d) Remove and replace the filter as quickly as possible. Place the used filter in a resealable container. Follow all local, state and federal regulations to dispose of the filter.

   e) Pull the "D" handle to unlock the pin and rotate the valve to the "RUN" position. Release the "D" handle and the locking pin should engage a detent in this position.

Figure 1
Valve Shown in "Run" Position with Locking Pin Engaged in Detent

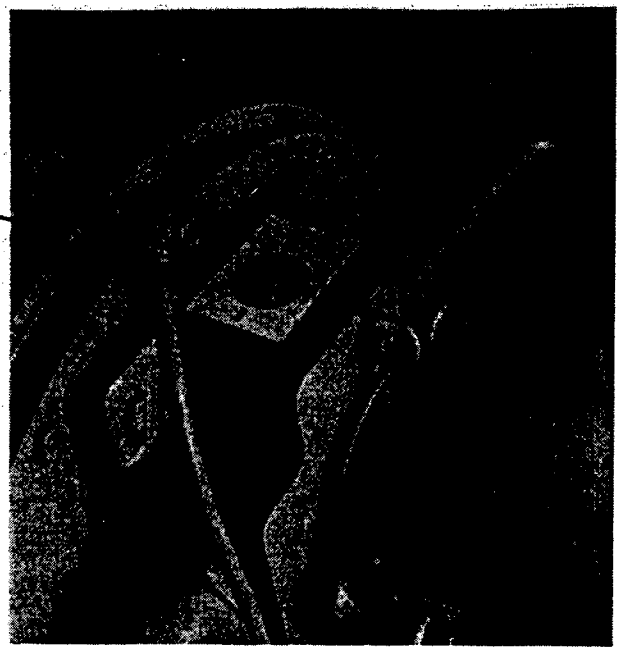

Figure 2
Overall View of the Redesigned Lubrication System

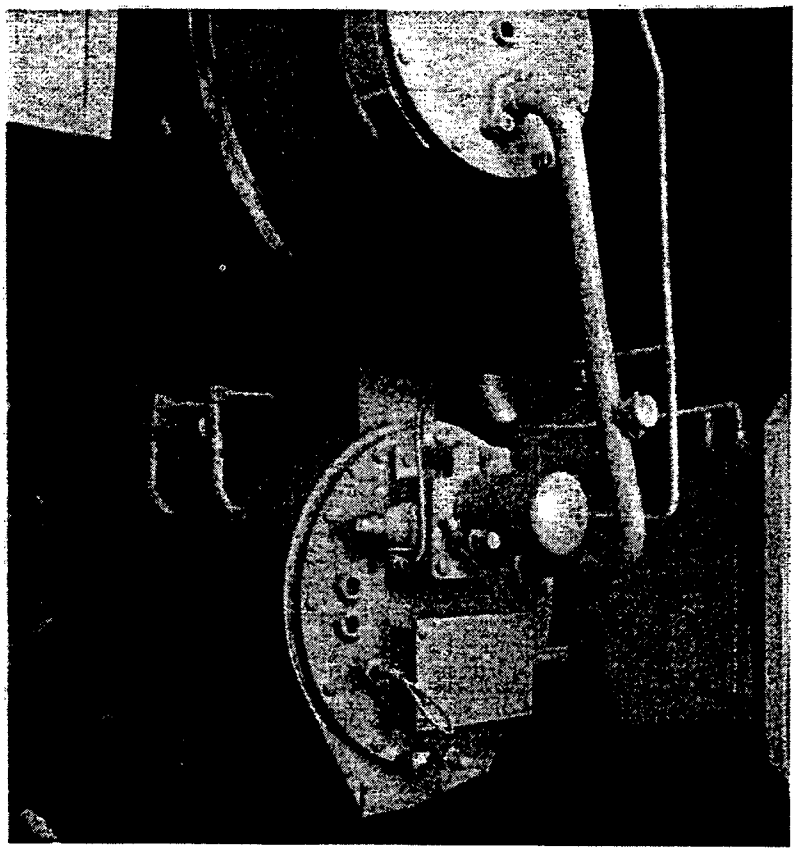

Figure 3
Sight Glass Showing Use of Aluminum Balls Which Float When Oil is Present

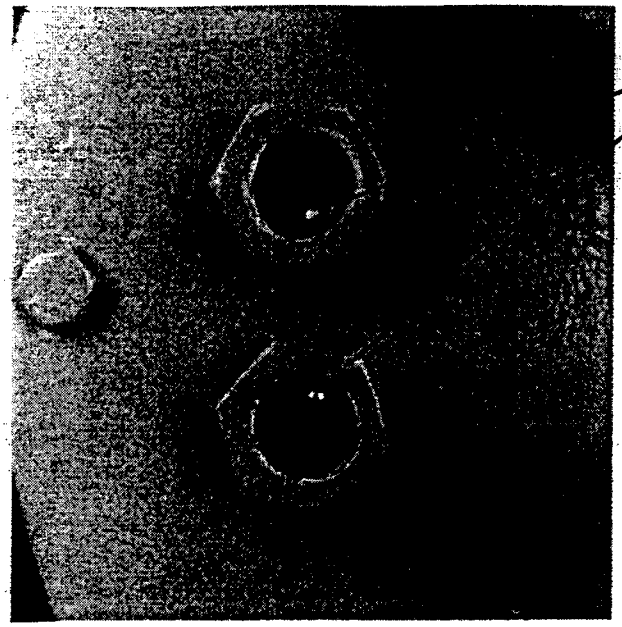

Figure 4
Oil Pump/Motor Assembly Mounted to New Tank Head

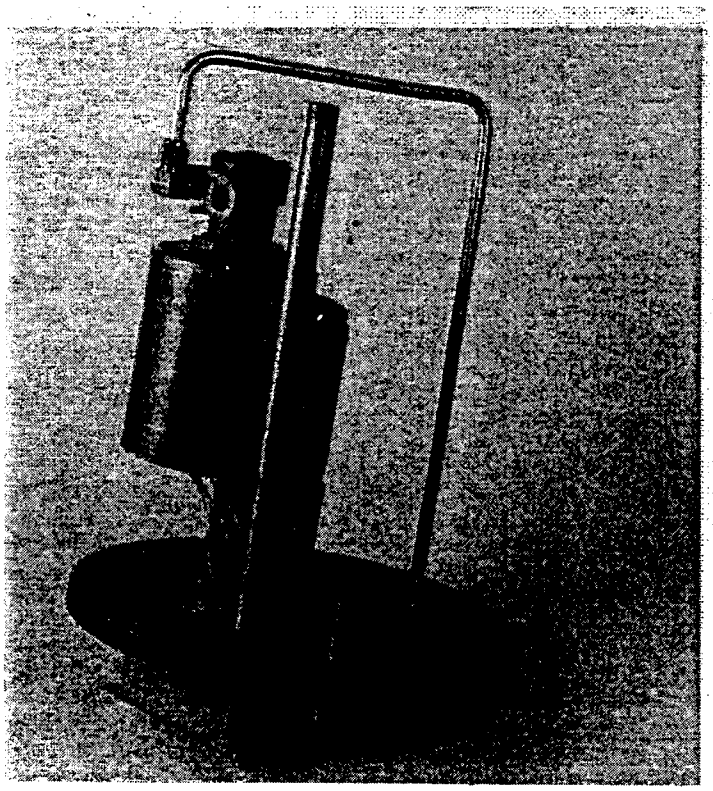

Figure 5
Rotating Valve from "RUN" to "Drain" Position



Figure 6
Valve Shown in the "Drain" Position

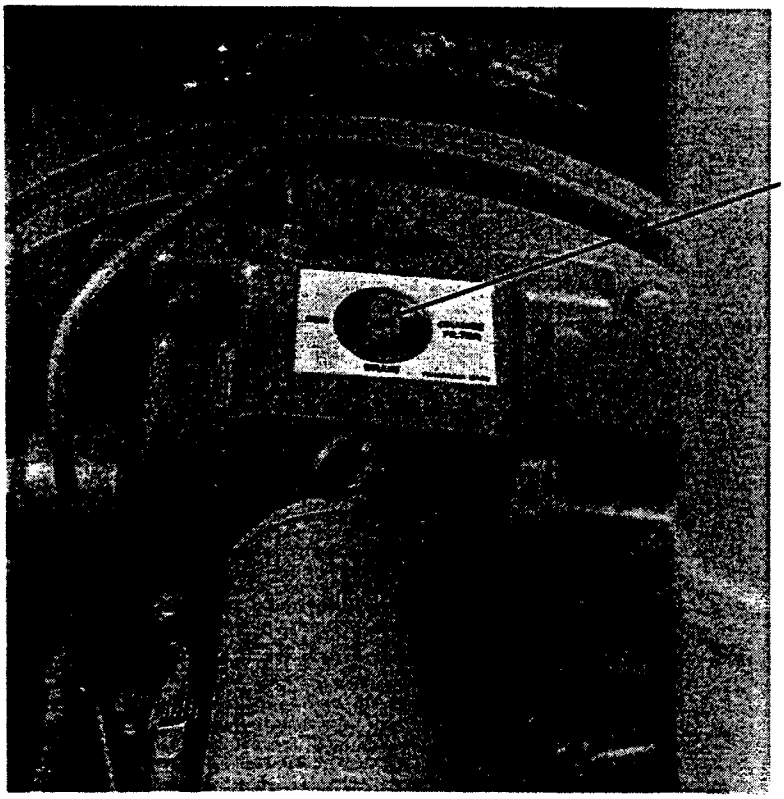

Figure 7
Valve Shown In "Change Filter" Position

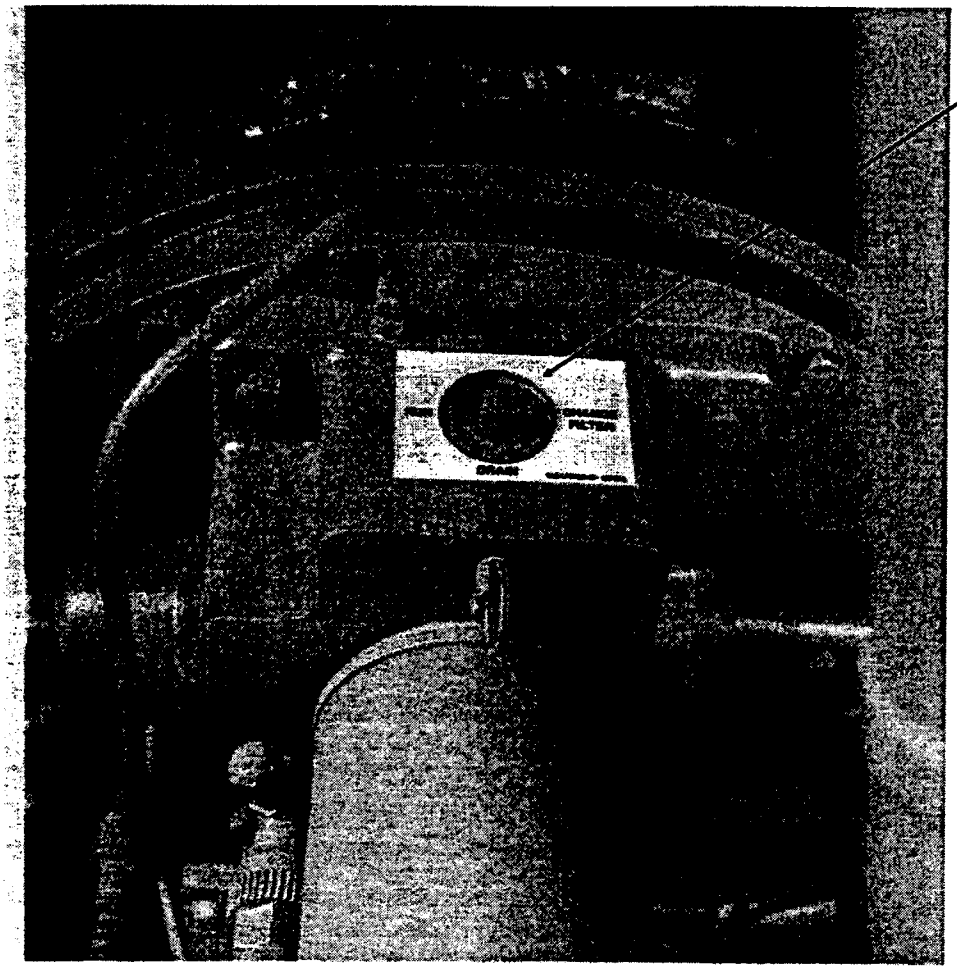

Valve Shown in "Change Filter" Position with Locking Pin Engaged in Detent

Figure 8
Rotary Valve in Drain Position

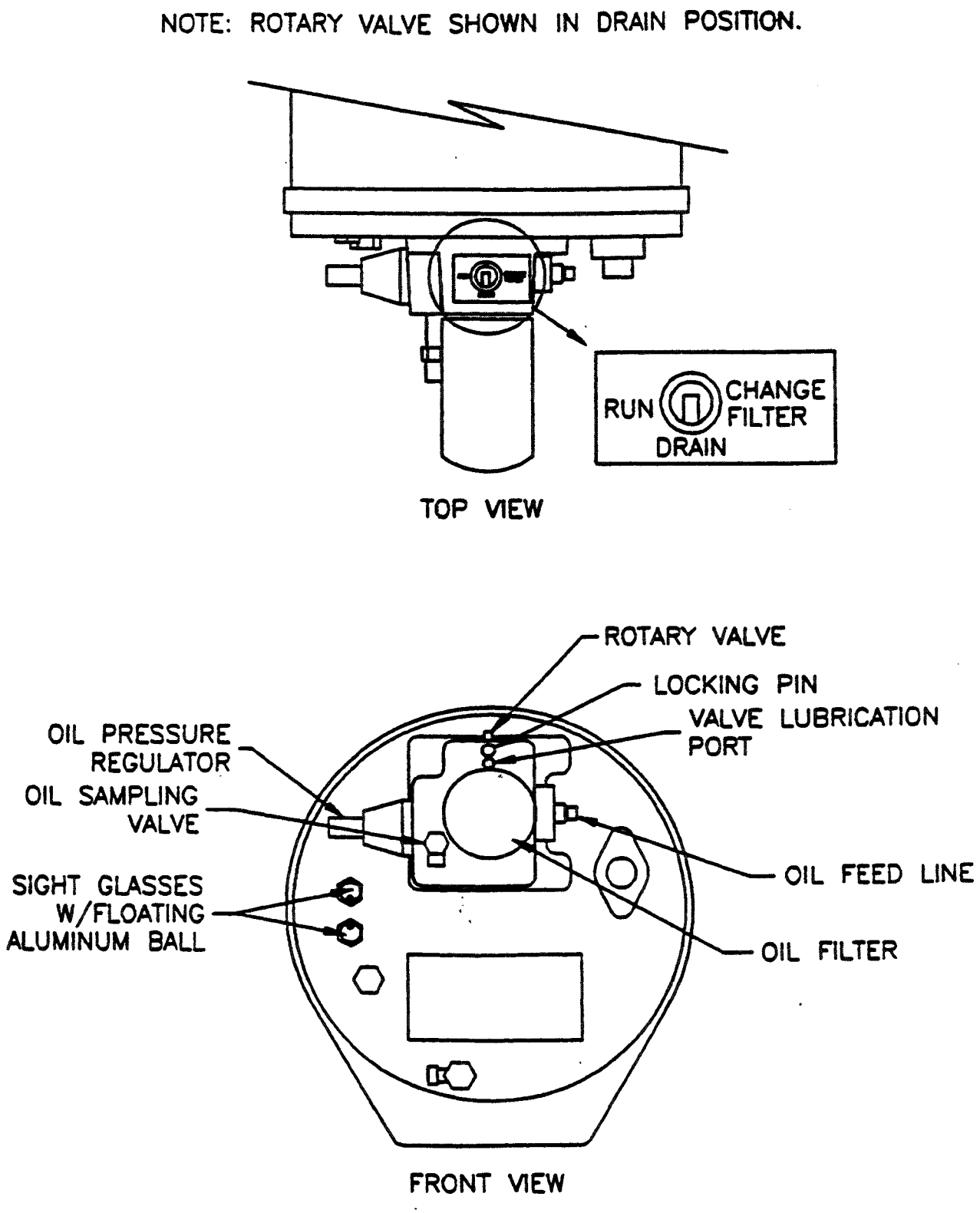

Corrective Action:

There is no Corrective Action required per this service bulletin.

Parts Order Information:

There are no parts to be ordered per this service bulletin.

Production Changes:

The new redesigned lubrication system is currently being used in production.

TRANE

Service Bulletin

CTV-SB-99

Library	Service Literature
Product Section	Refrigeration
Product	Centrifugal Liquid Chillers
Model	CenTraVac
Literature Type	General Service Bulletin
Sequence	99
Date	June 11, 1998
File No.	SV-RF-CTV-CTV-SB-99-698
Supersedes	New

Subject: Color Markings on O-Ring and Gasket Material

Introduction:

The purpose of this service bulletin is to provide information related to the color markings of the rubber o-rings and flat gaskets furnished as service replacement parts for the Trane CenTraVac® products.

Discussion:

The o-rings and gaskets used by the Trane Company have an identifying mark on them designating the specific type of material. These markings are generally a small colored dot used on o-rings and for gaskets, either a small dot on the edge or a thin stripe on the face of the gasket. **The information in this bulletin does not apply to paper, Teflon, red rubber, or fiber reinforced type gaskets.**

The following information is intended to assist the installing service technician in identifying the type of rubber o-ring and gasket materials that are acceptable for use in the different refrigerants. Also included is general information on water box o-rings and gaskets. Use of an improper rubber o-ring or gasket in a refrigerant application can result in premature failure of the material and subsequent equipment leaks.

R11 and R113 Water Cooled Centrifugal Units:

The low pressure R11 and R113 centrifugal units use a material with a yellow or white marking. For some high temperature applications (commonly the discharge flange and second stage volutes to motor housing or volute to volute o-rings on heat recovery units) the material will have an **orange** mark indicating its suitability for the higher operating temperatures.

The **yellow** and **white** marked materials for use in these refrigerants are still available and may be supplied as service parts for replacements. There will be many instances where the replacement part will be an alternate material with a **brown** mark. The **brown** marked material is completely compatible with R11 and R113 in all temperature applications and can be used in refrigerants R11 and R113. The substitution of the alternate material has occurred on some o-ring and gasket sizes where low usage and increased costs of the original material (**white**, **orange** or **yellow**) has warranted the change to reduce inventories of stocked parts.

Since the Trane Company has a policy of continuous product improvement, it reserves the right to change specifications and design without notice. The installation and servicing of the equipment referred to in this booklet should be done by qualified, experienced technicians.

©American Standard Inc. 1998

R123 Water Cooled Centrifugal (Including Converted) Units:

All refrigerant side R123 o-rings and flat rubber gaskets must have a **brown** mark indicating their compatibility with this refrigerant.

⚠ **CAUTION**
DO NOT USE YELLOW, WHITE OR ORANGE MATERIAL IN REFRIGERANT R123 APPLICATIONS. USE MATERIAL WITH A BROWN MARKING. Failure to do so will result in material failure and subsequent equipment leaks.

R12 Air Cooled or R12 Water Cooled Centrifugal Units:

The original refrigerant side o-rings and gaskets used for the air and water cooled CenTraVac® units built by The Trane Company are marked with either a **red** or **green** dot depending on the application. These o-rings are still available as service parts in many cases. In some cases the replacement service part for one of the original o-rings or gaskets (**red** or **green**) may be the material with the **brown** marking as indicated in the section above. The substitution of the **brown** material is related to usage and cost as previously discussed. It should be noted that the o-rings and gaskets with the **brown** marking are fully compatible with R12 in all applications.

Note: The only R12 water cooled centrifugal chillers manufactured by The Trane Company were the large hermetic model CVHD units.

R134a (Converted) Air Cooled Centrifugal Units:

The material used today in the conversion of units in the United States and Canada from R12 to R134a is the same material used on the R123 low pressure refrigerant units and has the **brown** markings. All of the rubber gaskets and o-rings used in these conversions and any replacement service parts ordered after the conversion must be the **brown** marked material. This applies only to units converted in the US and Canada.

Water Box O-rings and Gaskets:

In general, the most widely used o-rings and gaskets installed on water boxes has been the **yellow** or **white** material. Many water boxes also use a thin tape (**red**) type of gasket which is supplied in a roll for field replacement. The replacement material (excluding tape) most often supplied today will be the **white** or **yellow** marked material. It may be possible to receive an alternate **brown** or even a **red** or **green** marked material as a replacement part. All of these materials are acceptable for use in a water box application.

In summary the following general rules apply to the use of Trane's o-rings and gaskets for the various refrigerant applications in the CenTraVac® product.

Application	Approved Material	Possible Substitute Material
R123 CenTraVacs All Temperatures	Brown	None Approved
R11 and R113 CenTraVacs Standard temperatures and heat recovery non-discharge areas.	Yellow or White	Brown
R11 and R113 CenTraVacs High temperatures (heat recovery) in discharge areas only.	Orange	Brown
R12 CenTraVacs Air and Water Cooled All temperatures.	Red or Green	Brown
R134a Converted Air Cooled CenTraVacs All temperatures.	Brown	None Approved
Water Box O-Rings and Gaskets	Yellow or White	Brown, Red, Green

It should be noted that the small painted marks on the o-rings and gaskets after being subjected to refrigerant and oil over time may no longer be visible.

It is hoped the information in this bulletin will help the installing servicemen quickly identify and confirm the suitability for use of the replacement gaskets and o-rings supplied for Trane CenTraVac® equipment. This may avoid inadvertent use of an o-ring or gasket material that is not compatible with the refrigerant being used in the unit. This is especially important as many units today are being converted to alternative refrigerants.

Labor, Material and Travel Authorization

This is an informational bulletin only and there is no labor, material or travel authorized.

TRANE

Installation PART-IN-135B

Library	**Service Literature**
Product Section	**Service Products**
Product	**Parts**
Model	**Controls**
Literature Type	**Installation**
Sequence	**135B**
Date	**March 2002**
File No.	**SV-SP-Controls-PART-IN-135B-0302**
Supersedes	**PART-IN-135A-0701**

Replacement of Relay RLY00765 with KIT07406

⚠ Warning
Hazardous Voltage!

Disconnect all electric power, including remote disconnects before servicing. Follow proper lockout/tagout procedures to ensure the power can not be inadvertently energized. Failure to disconnect power before servicing could result in death or serious injury.

RLY00765, the Trane Motor Protection Module, is no longer available. KIT07406 is a functional replacement. KIT07406 includes the MP-3000 (SHD00334) motor protection relay, a signal conditioner (TRR01622), a terminal block (BLK00285), and a mounting adapter (PLT03427) to allow the MP-3000 to be mounted through the existing cabinet door.

SHD00334 provides most of the functionality of the existing Motor Protection Module.

Note: *The new SHD00334* ***Does Not*** *provide distribution fault protection. A distribution fault is defined as a complete loss of line voltage for a period of less than 60 cycles. If distribution fault protection is still desired, a FastPak or full UCP2 controls retrofit can provide that functionality.*

Setting Proper CT Ratio

RLY00765 is designed for use with current transformers (CTs) having a nominal or rated secondary current of either 5 amps or 1 amps. Typical Trane CTs are 5 amp.

When CT ratios are set, the value entered is the numerator of the main CT ratio. The denominator then is assumed to be 5.

For reliable motor protection, the CT must deliver between 2.5 and 4 amperes at 100 percent of the chiller motor FLA.

For optimal metering accuracy at low loads, the CT should deliver between 3.5 and 4 amperes at 100 percent FLA. **Attempt to achieve 3.75 A.**

© American Standard Inc. 2002

Since Trane has a policy of continuous product and product data improvement, it reserves the right to change design and specifications without notice. Only qualified technicians should perform the installation and servicing of equipment referred to in this publication.

For example, if the motor has an FLA value of 300A and the existing CT is 400:5, the CT will supply:

300 x 5/400 = 3.75 amps (an ideal value) This parameter is set in Page 1, Line 5. See the enclosed vendor literature, page 47, for more details.

If the existing CTs do not deliver acceptable values, new CTs will be required. Once the correct CT ratio is determined, see Table 3 for part numbers to order the correct CTs.

On some CVHA models with pneumatic load limit relays, the CTs were located on the leads (T1, T2, T3, T4, T5, T6) going to the motor rather than on the line side of the starter ("phase amp monitoring"). These CTs do not read full current drawn by the motor. In these cases, the CTs must be relocated to the line side of the starter so they read full current drawn by the starter. These CTs may have to be replaced if they do not fall in the range mentioned above. If new CTs are required, see Table 3 for part numbers to order the correct CTs. A wiring diagram is included in this manual.

Wiring Notes

Because some of the functionality of the old RLY00765 is contained within the SHD00334 module, some of the existing wires are no longer required. The following table describes where the wires from the old relay, RLY00765, are to be placed on the new SHD00334 module and TRR01622.

The terminal block will not be required for every installation. It is included for situations where existing wiring is not long enough to reach from the existing RLY00765 location to the through-door location of the new SHD00334. Figures 1 and 2 show the existing RLY00765 connections and the SHD00334 terminals. Figure 4 shows the TRR01622 connections.

Because the existing capacity control module expects a 0 to -8.25 volt DC signal and the MP-3000 outputs only a 4 to 20 mA signal, a signal processor is required (TRR01622). Wire TRR01622 to SHD00334 and the existing RLY00765 as shown in Table 1.

Installation

1. Install the SHD00334 through the panel door using the mounting flange, hardware, and gasket provided. See figure 3 for panel cutout and mounting details. Figure 5 is a full size cutout template.

Installation

***Note**: SHD00334 does not have to be mounted through-the-door. That would mean the display will not be able to be read and all programming must be done with the door open.*

2. Move wires from existing RLY00765 to new SHD00334 and TRR01622 as shown in Table 1 and Figures 1, 2 , 4 and wiring diagram. Terminal block BLK00285 is included if required to splice in additional wire.

***Note**: RLY00765 does not have to be removed if it does not present a space problem in the starter cabinet.*

3. SHD00334 must be programmed correctly to ensure proper operation and protection of the chiller.
   See the installation manual included with SHD00334 and Table 2 for proper settings. Table 2 shows values that need to be changed from the default values. If no value is shown in "Selected Value" column in Table 2, the default value should be used. Verify default settings match what is shown in Table 2.

***Note:** The security door located on the bottom left of the operator panel covers two pushbuttons: Program and Emergency Override. The door will accept a lead seal to prevent unauthorized set point changes and the overriding of start lockout functions.*

4. Consult enclosed Cutler-Hammer literature I.L.17562 for details about specific parameters, operation, and troubleshooting.

Table 1 — Wiring Connections

From old connection RLY00765	C1	C2	C3	C4	C5	C6	V1	V2	B1	J1	J2
To new connection SHD00334	H1A	H2A	H1B	H2B	H1C	H2C					
To new connection TRR01622							8**	7**			

From old connection RLY00765	B2	D1	D2	E1*	E2*	S1	S2	(120 V power) XX1	(120 V power) X2	SHIELD	E3	E4
To new connection SHD00334		3	2	See wiring diagram		Not Used	Not Used	4	7	Not Used	Not Used	Not Used
New Connection TRR01622								1	3			

From new connection TRR01622	6	5
To new connection SHD00334	24	25

Notes:

Terminals 7 and 9 must be jumpered together on SHD00334.

For wires not used, wire nut and tape wires, coil up, and place out of the way.

* Shut trip circuit breaker CB11 no longer used. Wire terminals 12 and 13 directly into circuit as shown on wiring diagram.

** TRR01622 terminals 7, 8 and Capacity Control module terminals V1 and V2 are polarity sensitive. If polarity is reversed, chiller will run fully loaded and will not unload.

Figure 2 — View Settings (Use default values except where selected values are listed)

Line No.	Display	Help Message	Setting Range/ Value Selection	Value as shipped	Section Reference	Selected Value
Page 1 SP MOTOR SETTINGS FOR MOTOR CONSTANTS						
1	FLA XXXX	FULL LOAD AMPS	10-3000 amps (1 amp. increments)	10	5.1.1	RLA From Nameplate
2	LRC XXXX	LOCKED ROTOR CURRENT % OF FLA	300-1200 % (1 % increments)	300	5.1.2	500
3	LRT XXX	MAXIMUM ALLOWABLE STALL TIME IN SECONDS	1-120 sec. (1 sec. increments)	1	5.1.3	
4	UTC XXX	ULTIMATE TRIP CURRENT IN % FLA	85-150% (1% increments)	85	5.1.4	103
5	PCT XXXX	PHASE CT RATIO NUMERATOR IN PRIMARY AMP	10-4000 A (increments of 1)	10	5.1.5	PCT See Enclosed Literature (Pg. 47) for Details
6	GCT XXXX	GROUND CT RATIO NUMERATOR IN PRIMARY AMP	10-4000 A (increments of 1)	50	5.1.6	
7	FREQ 50 or FREQ 60	50 OR 60 HERTZ LINE FREQUENCY	Toggles between FREQ 50 and FREQ 60	FREQ 60	5.1.7	
8	REV or NON REV	REVERSING OR NON-REVERSING STARTER	Toggles between REV and NONREV	NONREV	5.1.8	
Page 2 SP RTD SETTINGS FOR RTD INPUTS						
1	RTD IN C or RTD IN F	DISPLAYED IN DEGREES C OR F	Toggles between RTD IN C and RTD IN F	RTD IN C	5.2.1	
2	WD T XXX	WINDING TEMP TRIP	0-199°C, OFF / 32-390°F, OFF (1°increments)	100	5.2.2	
3	WD A XXX	WINDING TEMP ALARM	0-199°C, OFF / 32-390°F, OFF (1°increments)	80	5.2.3	
4	MB T XXX	MOTOR BEARING TRIP	0-199°C, OFF / 32-390°F, OFF (1°increments)	100	5.2.4	
5	MB A XXX	MOTOR BEARING ALARM	0-199°C, OFF / 32-390°F, OFF (1°increments)	80	5.2.5	
6	LB T XXX	LOAD BEARING TRIP	0-199°C, OFF / 32-390°F, OFF (1°increments)	100	5.2.6	
7	LB A XXX	LOAD BEARING ALARM	0-199°C, OFF / 32-390°F, OFF (1°increments)	80	5.2.7	
8	AX T XX	AUXILIARY TRIP	0-199°C, OFF / 32-390°F, OFF (1°increments)	100	5.2.8	
9	AX A XXX	AUXILIARY TRIP	0-199°C, OFF / 32-390°F, OFF (1°increments)	80	5.2.9	
10	DIAG ON or DIAG OFF	ALARM ON RTD FAILURE DIAGNOSTIC	Toggles between DIAG ON and DIAG OFF	DIAG ON	5.2.10	

Figure 2 — View Settings, Continued (Use default values except where selected values are listed)

Line No.	Display	Help Message	Setting Range/Value Selection	Value as Shipped	Section Reference	Selected Value
Page 3 SP TRIP SETTINGS FOR TRIP EVENTS						
1	GFT XXX	GROUND FAULT TRIP LEVEL IN % OF GROUND CT RATIO NUMERATOR	2-55% of Ground Ct ratio numerator, OFF (1% increments)	24%	5.3.1	OFF
2	GFSD XX	GROUND FAULT START DELAY IN CYCLES	2-60 ac cycles (1 cycle increments)	5	5.3.2	
3	GFRD XX	GROUND FAULT RUN DELAY IN CYCLES	0-60 ac cycles (1 cycle increments)	2	5.3.3	
4	IOC XXXX	INSTANTANEOUS OVERCURRENT IN % FLA	300-1600%, OFF (1% increments)	OFF	5.3.4	1070
5	IOCSD XX	INSTANTANEOUS OVERCURRENT START DELAY IN CYCLES	2-60 ac cycles (1 cycle increments)	3	5.3.5	5
6	JMT XXXX	JAM TRIP LEVEL IN % FLA	100-1200%, OFF (1% increments)	1000%	5.3.6	140
7	JMSD XXX	JAM TRIP AND ALARM START DELAY IN SECONDS	0-1200 sec. (1 sec. increments)	60	5.3.7	13
8	JMTR XXX	JAM TRIP RUN DELAY IN SECONDS	0-240 sec. (1 sec. increments)	2	5.3.8	1
9	ULT XXX	UNDERLOAD TRIP LEVEL IN % FLA	6-90%, OFF (1% increments)	OFF	5.3.9	OFF
10	ULSD XXX	UNDERLOAD TRIP AND ALARM START DELAY IN SECONDS	0-120 sec. (1 sec. increments)	60	5.3.10	
11	ULTR XXX	UNDERLOAD TRIP RUN DELAY IN SECONDS	0-240 sec. (1 sec. increments)	10	5.3.11	
12	UBT XXX	PHASE UNBALANCE TRIP LEVEL	4-40%, OFF (1% increments)	OFF	5.3.12	40%
13	UBSD XXX	PHASE UNBALANCE TRIP AND ALARM START DELAY IN SECONDS	0-120 sec. (1 sec. increments)	10	5.3.13	13
14	UBTR XXX	PHASE UNBALANCE TRIP RUN DELAY IN SECONDS	0-240 sec. (1 sec. increments)	2	5.3.14	
Page 4 SP ALARM SETTINGS FOR ALARM EVENTS						
1	GFA XXX	GROUND FAULT ALARM LEVEL IN % OF GROUND CT RATIO NUMERATOR	2-55% of Ground Ct ratio numerator, OFF (1% increments)	OFF	5.4.1	
2	I2TA XXX	I2T ALARM LEVEL IN % FULL OF I2T TRIP CAPACITY	60-99%, OFF (1% increments)	80	5.4.2	

Figure 2 — View Settings, Continued (Use default values except where selected values are listed)

Line No.	Display	Help Message	Setting Range/Value Selected	Value as Shipped	Section Reference	Selected Value
3	JMA XXXX	JAM ALARM LEVEL IN % FLA	100-1200%, OFF (1% increments)	1000%	5.4.3	OFF
4	JMAR XXX	JAM ALARM RUN DELAY IN SECONDS	0-240 sec. (1 sec. increments)	2	5.4.4	
5	ULA XXX	UNDERLOAD ALARM LEVEL IN % FLA	6-90%, OFF (1% increments)	OFF	5.4.5	
6	ULAR XXX	UNDERLOAD ALARM RUN DELAY IN SECONDS	0-240 sec. (1 sec. increments)	10	5.4.6	
7	UBA XXX	PHASE UNBALANCE ALARM LEVEL	4-40%, OFF (1% increments)	10	5.4.7	OFF
8	UBAR XXX	PHASE UNBALANCE ALARM RUN DELAY IN SECONDS	0-240 sec. (1 sec. increments)	10	5.4.8	
Page 5 SP START SETTINGS FOR START EVENTS						
1	ST/T XXX	STARTS PER TIME ALLOWED	1-10 starts/time (increments of 1)	1	5.5.1	
2	T/ST XXX	TIME ALLOWED FOR STARTS COUNT IN MINUTES	1-240 minutes, OFF (1 minute increments)	OFF	5.5.2	
3	TBS XXX	TIME BETWEEN STARTS IN MINUTES	1-240 minutes, OFF (1 minute increments)	OFF	5.5.3	
4	NOCS X	NUMBER OF COLD STARTS ALLOWED	1-5 starts (increments of 1)	1	5.5.4	
5	TRNC XXX	MOTOR START TRANSITION CURRENT LEVEL IN % FLA	10-300% (1% increments)	130	5.5.5	80
6	TRNT XXX	MOTOR START TRANSITION TIME IN SECONDS	0-1200 sec. (1 sec. Increments)	10	5.5.6	12 = Wye-Delta 8 = Autotransformer 4 = Across the Line
7	Choose: TRN TIME TRN I TRN T+C TRN T/C	TRANSITION ON EVENT TRN TIME – ON TIME ONLY, TRN I – ON CURRENT ONLY, TRN T+C – ON TIME OR CURRENT, TRN T/C – ON TIME AND CURRENT	Choose one of the four conditions that determine a start-to-run transition: TRN TIME, TRN I, TRN T+C, or TRN T/C. Refer to settings P5L5 and P5L6.	TRN I	5.5.7	TRN T+C
8	INSQ XXX	INCOMPLETE SEQUENCE REPORT BACK TIME IN SECONDS ON DISCRETE INPUT 2	1-240 sec., OFF (1 sec. increments) **Note:** Choosing a time value here (not OFF) also locks P7L1 to INC SEQ and no other choices are available there. Also, if this is set to OFF, later setting of P7L1 to INC SEQ will force a setting of 1 second here.	1	5.5.8	OFF

Figure 2 — View Settings, Continued (Use default values except where selected values are listed)

Line No.	Display	Help Message	Setting Range/Value Selection	Value as Shipped	Section Reference	Selected Value
9	INSQ TRN or INSQ ST	INCOMPLETE SEQUENCE START TIMER EVENT INSQ TRN – START TO RUN TRANSITION INSQ ST – STOP TO START TRANSITION	Toggles between INSQ TRN and INSQ ST	INSQ ST	5.5.9	
10	LAT XXX	LONG ACCELERATION TIME IN SECONDS	1-1200 sec., OFF (1 sec. increments) **Danger** - set to OFF unless absolutely needed. If used, connect zero-speed switch - see P5L11 and P6L1.	OFF	5.5.10	
11	ZSW ON or ZSW OFF	ZERO SPEED SWITCH ON DISCRETE INPUT 1 ON OR OFF	Toggles between ZSW ON and ZSW OFF. **Note:** Choosing ZSW ON here also locks P6L1 to ZERO SW and no other choices are available there. Also, setting P6L1 to ZERO SW will force ZSW ON here.	ZSW OFF	5.5.11	
12	ABK XXXX	ANTI-BACKSPIN DELAY TIME IN SECONDS	1-3600 seconds, OFF (1 second increments)	OFF	5.5.12	
Page 6 SP DI 1	**SETTING FOR DISCRETE INPUT NUMBER 1**					
1	Choose: REM RST REM TRIP DIF TRIP MTR STOP RST DBL EMG OVR ZERO SW	CONFIGURE DISCRETE INPUT 1 - - REM RST – REMOTE RESET REM TRIP – REMOTE TRIP DIF TRIP – DIFFERENTIAL TRIP MTR STOP – MOTOR STOP DETECTION RST DBL – RESET DISABLE EMG OVR – EMERGENCY OVERRIDE ZERO SW – ZERO SPEED SWITCH CONFIGURE DISCRETE INPUT 1 – ZERO SW – ZERO SPEED SWITCH TO GET ANY OTHER FUNCTION SET ZERO SPEED SWITCH SETTING TO OFF	Choose from the seven selections for the function of Discrete Input 1. If ZERO SW is selected here, P5L11 will be forced to ZSW ON. If P5L11 was already set to ZSW ON, then this setting is automatically set to ZERO SW and no other selections are visible.	REM RST	5.6.1	

Figure 2 — View Settings, Continued (Use default values except where selected values are listed)

Line No.	Display	Help Message	Setting Range/Value Selection	Value as Shipped	Section Reference	Selected Value
Page 7 SP DI 2 SETTING FOR DISCRETE INPUT NUMBER 2						
1	Choose: REM RST REM TRIP DIF TRIP MTR STOP RST DBL EMG OVR INC SEQ	CONFIGURE DISCRETE INPUT 2 - - REM RST – REMOTE RESET RE– REMOTE TRIP DIF TRIP M TRIP – DIFFERENTIAL TRIP MTR STOP – MOTOR STOP DETECTION RST DBL – RESET DISABLE EMG OVR – EMERGENCY OVERRIDE INC SEQ – INCOMPLETE SEQUENCE CONFIGURE DISCRETE INPUT 2 – INC SEQ – INCOMPLETE SEQUENCE TO GET ANY OTHER FUNCTION SET INCOMPLETE SEQUENCE TIME SETTING TO OFF	Choose from the seven selections for the function of Discrete Input 2. If INC SEQ is selected here, P5L8 will be turned on and set to 1 second. If P5L8 was already set to a time value (not OFF), then this setting is automatically set to INC SEQ and no other selections are visible.	INC SEQ	5.7.1	REM RST (Cannot be "**INC SEQ**"! — Any other selection valid
Page 8 SP AREL SETTING FOR ALARM RELAY OUTPUT CONFIGURATION						
1	Choose: GF A ON GF T ON or GF OFF	ENABLE GROUND FAULT ALARM OR TRIP TO ACTIVATE ALARM RELAY OUTPUT OR DISABLE	Toggles between GF A ON, GF T ON, and GF OFF	GF A ON	5.8	
2	Choose: I2T A ON I2T T ON or I2T OFF	ENABLE I2T ALARM OR TRIP TO ACTIVATE ALARM RELAY OUTPUT OR DISABLE	Toggles between I2T A ON, I2T T ON, and I2T OFF	I2T A ON	5.8	
3	Choose: JAM A ON JAM T ON or JAM OFF	ENABLE JAM ALARM OR TRIP TO ACTIVATE ALARM RELAY OUTPUT OR DISABLE	Toggles between JAM A ON, JAM T ON, and JAM OFF	JAM A ON	5.8	
4	Choose: UL A ON UL T ON or UL OFF	ENABLE UNDERLOAD ALARM OR TRIP TO ACTIVATE ALARM RELAY OUTPUT OR DISABLE	Toggles between UL A ON, UL T ON, and UL OFF	UL A ON	5.8	
5	Choose: UB A ON UB T ON or UB OFF	ENABLE PHASE UNBALANCE ALARM OR TRIP TO ACTIVATE ALARM RELAY OUTPUT OR DISABLE	Toggles between UB A ON, UB T ON, and UB OFF	UB A ON	5.8	
6	Choose: WD A ON WD T ON or WD OFF	ENABLE WINDING TEMP ALARM OR TRIP TO ACTIVATE ALARM RELAY OUTPUT OR DISABLE	Toggles between WD A ON, WD T ON, and WD OFF	WD A ON	5.8	
7	Choose: MB A ON MB T ON or MB OFF	ENABLE MOTOR BEARING ALARM OR TRIP TO ACTIVATE ALARM RELAY OUTPUT OR DISABLE	Toggles between MB A ON, MB T ON, and MB OFF	MB A ON	5.8	

Figure 2 — View Settings, Continued (Use default values except where selected values are listed)

Line No.	Display	Help Message	Setting Range/Value Selection	Value as Shipped	Section Reference	Selected Value
8	Choose: LB A ON LB T ON or LB OFF	ENABLE LOAD BEARING ALARM OR TRIP TO ACTIVATE ALARM RELAY OUTPUT OR DISABLE	Toggles between LB A ON, LB T ON, and LB OFF	LB A ON	5.8	
9	Choose: AX A ON AX T ON or AX OFF	ENABLE AUXILIARY RTD TEMP ALARM OR TRIP TO ACTIVATE ALARM RELAY OUTPUT OR DISABLE	Toggles between AX A ON, AX T ON, and AX OFF	AX A ON	5.8	
10	Choose: SX A ON SX T ON or SX OFF	ENABLE STARTS PER TIME TRIP OR ALARM TO ACTIVATE ALARM RELAY OUTPUT OR DISABLE	Toggles between SX A ON, SX T ON, and SX OFF	SX A	5.8	
11	Choose: TBS T ON or TBS OFF	ENABLE TIME BETWEEN STARTS TRIP TO ACTIVATE ALARM RELAY OUTPUT OR DISABLE	Toggles between TBS T ON and TBS OFF	TBS OFF	5.8	
12	RTDF ON or RTDF OFF	ENABLE INDIVIDUAL RTD CHANNEL FAILURE TO ACTIVATE ALARM RELAY OUTPUT OR DISABLE	Toggles between RTDF ON and RTDF OFF	RTDF ON	5.8	
13	RCOM ON or RCOM OFF	ENABLE RTD MODULE COMMUNICATION FAILURE TO ACTIVATE ALARM RELAY OUTPUT OR DISABLE	Toggles between RCOM ON and RCOM OFF	RCOM ON	5.8	
14	IOCT ON or IOCT OFF	ENABLE INSTANTANEOUS TRIP TO ACTIVATE ALARM RELAY OUTPUT OR DISABLE	Toggles between IOCT ON and IOCT OFF	IOCT OFF	5.8	
15	PH R ON or PH R OFF	ENABLE PHASE REVERSAL TRIP TO ACTIVATE ALARM RELAY OUTPUT OR DISABLE	Toggles between PH R ON and PH R OFF	PH R OFF	5.8	
16	INSQ ON or INSQ OFF	ENABLE INCOMPLETE SEQUENCE TRIP TO ACTIVATE ALARM RELAY OUTPUT OR DISABLE	Toggles between INSQ ON and INSQ OFF	INSQ OFF	5.8	
17	REMT ON or REMT OFF	ENABLE REMOTE TRIP TO ACTIVATE ALARM RELAY OUTPUT OR DISABLE	Toggles between REMT ON and REMT OFF	REMT OFF	5.8	
18	DIFT ON or DIFT OFF	ENABLE DIFFERENTIAL TRIP TO ACTIVATE ALARM RELAY OUTPUT OR DISABLE	Toggles between DIFT ON and DIFT OFF	DIFT OFF	5.8	
19	INCT ON or INCT OFF	ENABLE INCOM TRIP TO ACTIVATE ALARM RELAY OUTPUT OR DISABLE	Toggles between INCT ON and INCT OFF	INCT OFF	5.8	
20	TRNT ON or TRNT OFF	ENABLE TRANSITION TRIP TO ACTIVATE ALARM RELAY OUTPUT OR DISABLE	Toggles between TRNT ON and TRNT OFF	TRNT OFF	5.8	

Figure 2 — View Settings, Continued (Use default values except where selected values are listed)

Line No.	Display	Help Message	Setting Range/Value Selection	Value as Shipped	Section Reference	Selected Value
21	ZSWT ON or ZSWT OFF	ENABLE ZERO SPEED SWITCH TRIP TO ACTIVATE ALARM RELAY OUTPUT OR DISABLE	Toggles between ZSWT ON and ZSWT OFF	ZSWT OFF	5.8	
22	TBYP ON or TBYP OFF	ENABLE TRIP BYPASS TO ACTIVATE ALARM RELAY OUTPUT OR DISABLE	Toggles between TBYP ON and TBYP OFF	TBYP OFF	5.8	
Page 9 SP AUX1		**SETTINGS FOR AUX 1 RELAY OUTPUT CONFIGURATION**				
1	LSPU XXX	LOAD SHED PICK-UP CURRENT AS % OF FLA	50-150%, OFF (1% increments) **Note**: P9L1 and P9L2 are forced to be coherent. See Section 5 explanation.	OFF	5.9.1	
2	LSDO XXX	LOAD SHED DROP-OUT CURRENT AS % OF FLA	50-LSPU Value %, OFF (1% increments) **Note**: P9L1 and P9L2 are forced to be coherent. See Section 5 explanation.	OFF	5.9.2	
3	LSDL XX	LOAD SHED DELAY IN SECONDS	0-5 sec. (0.1 sec. increments)	1	5.9.3	
			If LSPU and LSDO are both set to OFF then the SP AUX1 functions below are available and visible:	— -		
4	Choose: GF A ON GF T ON Or GF OFF	ENABLE GROUND FAULT ALARM OR TRIP TO ACTIVATE AUX1 RELAY OUTPUT OR DISABLE	Toggles between GF A ON, GF T ON, and GF OFF	GF OFF	5.9.4	
5	Choose: I2T A ON I2T T ON or I2T OFF	ENABLE I2T ALARM OR TRIP TO ACTIVATE AUX1 RELAY OUTPUT OR DISABLE	Toggles between I2T A ON, I2T T ON, and I2T OFF	I2T T ON	5.9.4	
6	Choose: JAM A ON JAM T ON or JAM OFF	ENABLE JAM ALARM OR TRIP TO ACTIVATE AUX1 RELAY OUTPUT OR DISABLE	Toggles between JAM A ON, JAM T ON, and JAM OFF	JAM OFF	5.9.4	
7	Choose: UL A ON UL T ON or UL OFF	ENABLE UNDERLOAD ALARM OR TRIP TO ACTIVATE AUX1 RELAY OUTPUT OR DISABLE	Toggles between UL A ON, UL T ON, and UL OFF	UL OFF	5.9.4	

Figure 2 — View Settings, Continued (Use default values except where selected values are listed)

Line No.	Display	Help Message	Setting Range/Value Selection	Value as Shipped	Section Reference	Selected Value
9	Choose: WD A ON UB T ON or UB OFF	ALARM OR TRIP TO ACTIVATE AUX1 RELAY OUTPUT OR DISABLE	Toggles between WD A ON, WD T ON, and WD OFF	WD OFF	5.9.4	
10	Choose: MB A ON MB T ON or MB OFF	ENABLE MOTOR BEARING TEMP ALARM OR TRIP TO ACTIVATE AUX1 RELAY OUTPUT OR DISABLE	Toggles between MB A ON, MB T ON, and MB OFF	MB OFF	5.9.4	
11	Choose: LB A ON LB T ON or LB OFF	ENABLE LOAD BEARING TEMP ALARM OR TRIP TO ACTIVATE AUX1 RELAY OUTPUT OR DISABLE	Toggles between LB A ON, LB T ON, and LB OFF	LB OFF	5.9.4	
12	Choose: AX A ON AX T ON or AX OFF	ENABLE AUXILIARY RTD TEMP ALARM OR TRIP TO ACTIVATE AUX1 RELAY OUTPUT OR DISABLE	Toggles between AX A ON, AX T ON, and AX OFF	AX OFF	5.9.4	
13	Choose: SX A ON SX T ON or SX OFF	ENABLE STARTS PER TIME TRIP OR ALARM TO ACTIVATE AUX1 RELAY OUTPUT OR DISABLE	Toggles between SX A ON, SX T ON, and SX OFF	SX OFF	5.9.4	
14	Choose: TBS T ON or TBS OFF	ENABLE TIME BETWEEN STARTS TRIP TO ACTIVATE AUX1 RELAY OUTPUT OR DISABLE	Toggles between TBS T ON, and TBS OFF	TBS OFF	5.9.4	
15	RTDF ON or RTDF OFF	ENABLE RTD FAILURE DIAGNOSTIC TO ACTIVATE AUX1 RELAY OUTPUT OR DISABLE	Toggles between RTDF ON and RTDF OFF	RTDF OFF	5.9.4	
16	RCOM ON or RCOM OFF	ENABLE RTD MODULE COMMUNICATION FAILURE TO ACTIVATE AUX1 RELAY OUTPUT OR DISABLE	Toggles between RCOM ON and RCOM OFF	RCOM OFF	5.9.4	
17	IOCT ON or IOCT OFF	ENABLE INSTANTANEOUS OVERCURRENT TRIP TO ACTIVATE AUX1 RELAY OUTPUT OR DISABLE	Toggles between IOCT ON and IOCT OFF	IOCT OFF	5.9.4	
18	PH R ON or PH R OFF	ENABLE PHASE REVERSAL TRIP TO ACTIVATE AUX1 RELAY OUTPUT OR DISABLE	Toggles between PH R ON and PH R OFF	PH R OFF	5.9.4	
19	INSQ ON or INSQ OFF	ENABLE INCOMPLETE SEQUENCE TRIP TO ACTIVATE AUX1 RELAY OUTPUT OR DISABLE	Toggles between INSQ ON and INSQ OFF	INSQ OFF	5.9.4	
20	REMT ON or REMT OFF	ENABLE REMOTE TRIP TO ACTIVATE AUX1 RELAY OUTPUT OR DISABLE	Toggles between REMT ON and REMT OFF	REMT OFF	5.9.4	
21	DIFT ON or DIFT OFF	ENABLE DIFFERENTIAL TRIP TO ACTIVATE AUX1 RELAY OUTPUT OR DISABLE	Toggles between DIFT ON and DIFT OFF	DIFT OFF	5.9.4	

Figure 2 — View Settings, Continued (Use default values except where selected values are listed)

Line No.	Display	Help Message	Setting Range/Value Selection	Value as Shipped	Section Reference	Selected Value
22	INCT ON or INCT OFF	ENABLE INCOM TRIP TO ACTIVATE AUX1 RELAY OUTPUT OR DISABLE	Toggles between INCT ON and INCT OFF	INCT OFF	5.9.4	
23	TRNT ON or TRNT OFF	ENABLE TRANSITION TRIP TO ACTIVATE AUX1 RELAY OUTPUT OR DISABLE	Toggles between TRNT ON and TRNT OFF	TRNT OFF	5.9.4	
24	ZSWT ON Or ZSWT OFF	ENABLE ZERO SPEED SWITCH TRIP TO ACTIVATE AUX1 RELAY OUTPUT OR DISABLE	Toggles between ZSWT ON and ZSWT OFF	ZSWT OFF	5.9.4	
25	TBYP ON Or TBYP OFF	ENABLE TRIP BYPASS TO ACTIVATE AUX1 RELAY OUTPUT OR DISABLE	Toggles between TBYP ON and TBYP OFF	TBYP OFF	5.9.4	
Page 10 SP AUX2 SETTINGS FOR AUX 2 RELAY OUTPUT CONFIGURATION						
1	TRN ON Or TRN OFF	ENABLE TRANSITION OUTPUT IF ENABLED ALL OTHER FUNCTIONS FOR AUX 2 ARE DISABLED	Toggles between TRN ON and TRN OFF If TRN is set to OFF then the SP AUX2 functions below are available and visible:	TRN ON	5.10.1	
2	Choose: GF A ON GF T ON Or GF OFF	ENABLE GROUND FAULT ALARM OR TRIP TO ACTIVATE AUX2 RELAY OUTPUT OR DISABLE	Toggles between GF A ON, GF T ON, and GF OFF	GF OFF	5.10.2	
3	Choose: I2T A ON I2T T ON Or I2T OFF	ENABLE I2T ALARM OR TRIP TO ACTIVATE AUX2 RELAY OUTPUT OR DISABLE	Toggles between I2T A ON, I2T T ON, and I2T OFF	I2T OFF	5.10.2	
4	Choose: JAM A ON JAM T ON Or JAM OFF	ENABLE JAM ALARM OR TRIP TO ACTIVATE AUX2 RELAY OUTPUT OR DISABLE	Toggles between JAM A ON, JAM T ON, and JAM OFF	JAM OFF	5.10.2	
5	Choose: UL A ON UL T ON Or UL OFF	ENABLE UNDERLOAD ALARM OR TRIP TO ACTIVATE AUX2 RELAY OUTPUT OR DISABLE	Toggles between UL A ON, UL T ON, and UL OFF	UL OFF	5.10.2	
6	Choose: UB A ON UB T ON Or UB OFF	ENABLE PHASE UNBALANCE ALARM OR TRIP TO ACTIVATE AUX2 RELAY OUTPUT OR DISABLE	Toggles between UB A ON, UB T ON, and UB OFF	UB OFF	5.10.2	
7	Choose: WD A ON WD T ON Or WD OFF	ENABLE WINDING TEMP ALARM OR TRIP TO ACTIVATE AUX2 RELAY OUTPUT OR DISABLE	Toggles between WD A ON, WD T ON, and WD OFF	WD OFF	5.10.2	
8	Choose: MB A ON MB T ON Or MB OFF	ENABLE MOTOR BEARING TEMP ALARM OR TRIP TO ACTIVATE AUX2 RELAY OUTPUT OR DISABLE	Toggles between MB A ON, MB T ON, and MB OFF	MB OFF	5.10.2	

Figure 2 — View Settings, Continued (Use default values except where selected values are listed)

Line No.	Display	Help Message	Setting Range/Value Selection	Value as Shipped	Section Reference	Selected Value
9	Choose: LB A ON LB T ON Or LB OFF	ENABLE LOAD BEARING TEMP ALARM OR TRIP TO ACTIVATE AUX2 RELAY OUTPUT OR DISABLE	Toggles between LB A ON, LB T ON, and LB OFF	LB OFF	5.10.2	
10	Choose: AX A ON AX T ON Or AX OFF	ENABLE AUXILIARY RTD TEMP ALARM OR TRIP TO ACTIVATE AUX2 RELAY OUTPUT OR DISABLE	Toggles between AX A ON, AX T ON, and AX OFF	AX OFF	5.10.2	
11	Choose: SX A ON SX T ON Or SX OFF	ENABLE STARTS PER TIME TRIP OR ALARM TO ACTIVATE AUX2 RELAY OUTPUT OR DISABLE	Toggles between SX A ON, SX T ON, and SX OFF	SX OFF	5.10.2	
12	Choose: TBS T ON Or TBS OFF	ENABLE TIME BETWEEN STARTS TRIP OR TO ACTIVATE AUX2 RELAY OUTPUT OR DISABLE	Toggles between TBS T ON, and TBS OFF	TBS OFF	5.10.2	
13	RTDF ON Or RTDF OFF	ENABLE RTD FAILURE DIAGNOSTIC TO ACTIVATE AUX2 RELAY OUTPUT OR DISABLE	Toggles between RTDF ON and RTDF OFF	RTDF OFF	5.10.2	
14	RCOM ON or RCOM OFF	ENABLE RTD MODULE COMMUNICATION FAILURE TO ACTIVATE AUX2 RELAY OUTPUT OR DISABLE	Toggles between RCOM ON and RCOM OFF	RCOM OFF	5.10.2	
15	IOC A ON IOC T ON or IOC OFF	ENABLE INSTANTANEOUS OVERCURRENT ALARM OR TRIP TO ACTIVATE AUX2 RELAY OUTPUT OR DISABLE	Toggles between IOCT ON and IOCT OFF	IOCT OFF	5.10.2	
16	PH R ON Or PH R OFF	ENABLE PHASE REVERSAL TRIP TO ACTIVATE AUX2 RELAY OUTPUT OR DISABLE	Toggles between PH R ON and PH R OFF	PH R OFF	5.10.2	
17	INSQ ON Or INSQ OFF	ENABLE INCOMPLETE SEQUENCE TRIP TO ACTIVATE AUX2 RELAY OUTPUT OR DISABLE	Toggles between INSQ ON and INSQ OFF	INSQ OFF	5.10.2	
18	REMT ON Or REMT OFF	ENABLE REMOTE TRIP TO ACTIVATE AUX2 RELAY OUTPUT OR DISABLE	Toggles between REMT ON and REMT OFF	REMT OFF	5.10.2	
19	DIFT ON Or DIFT OFF	ENABLE DIFFERENTIAL TRIP TO ACTIVATE AUX2 RELAY OUTPUT OR DISABLE	Toggles between DIFT ON and DIFT OFF	DIFT OFF	5.10.2	
20	INCT ON Or INCT OFF	ENABLE INCOM TRIP TO ACTIVATE AUX2 RELAY OUTPUT OR DISABLE	Toggles between INCT ON and INCT OFF	INCT OFF	5.10.2	
21	TRNT ON Or TRNT OFF	ENABLE TRANSITION TRIP TO ACTIVATE AUX2 RELAY OUTPUT OR DISABLE	Toggles between TRNT ON and TRNT OFF	TRNT OFF	5.10.2	
22	ZSWT ON Or ZSWT OFF	ENABLE ZERO SPEED SWITCH TRIP TO ACTIVATE AUX2 RELAY OUTPUT OR DISABLE	Toggles between ZSWT ON and ZSWT OFF	ZSWT OFF	5.10.2	
23	TBYP ON Or TBYP OFF	ENABLE TRIP BYPASS TO ACTIVATE AUX2 RELAY OUTPUT OR DISABLE	Toggles between TBYP ON and TBYP OFF	TBYP OFF	5.10.2	

Figure 2 — View Settings, Continued (Use default values except where selected values are listed)

Line No.	Display	Help Message	Setting Range/Value Selection	Value as Shipped	Section Reference	Selected Value
Page 11 SP A OUT SETTING FOR ANALOG OUTPUT CONFIGURATION						
1	MAX 100 MAX 125 MAX WRTD MAX %12T	4-20 MA OUTPUT MAX 100 – 20 MA FOR 100% FLA MAX 125 – 20 MA FOR 125% FLA MAX WRTD – 20 MA FOR TRIP LEVEL MAX %I2T – 20 MA FOR 100% I2T	Select one of MAX 100, MAX 125, MAX WRTD, or MAX %I2T	MAX 125	5.11.1	
Page 12 SP SYS SETPOINTS FOR SYSTEM CONFIGURATIONS						
1	TP MODE X	CONFIGURE TRIP RELAY OUTPUT TO BE MODE 1 – TRIP RELAY ENERGIZES ON TRIP EVENT OR MODE 2 – TRIP RELAY ENERGIZES ON POWER UP AND DE-ENERGIZES ON TRIP EVENT	Toggles between TP MODE1 and TP MODE2	TP MODE2	5.12.1	
2	AL MODE X	CONFIGURE ALARM RELAY OUTPUT TO BE MODE 1 – ALARM RELAY ENERGIZES ON ALARM EVENT OR MODE 2 – ALARM RELAY ENERGIZES ON POWER UP AND DE-ENERGIZES ON ALARM EVENT	Toggles between AL MODE1 and AL MODE2	AL MODE2	5.12.2	AL MODE 1
3	AX1 MOD X	CONFIGURE AUX1 RELAY OUTPUT TO BE MODE 1 – AUX1 RELAY ENERGIZES ON AUX1 EVENT OR MODE 2 – AUX1 RELAY ENERGIZES ON POWER UP AND DE-ENERGIZES ON AUX1 EVENT	Toggles between AX1 MOD1 and AX1 MOD2	AX1 MOD1	5.12.3	
4	AX2 MOD X	CONFIGURE AUX2 RELAY OUTPUT TO BE MODE 1 – AUX2 RELAY ENERGIZES ON AUX2 EVENT OR MODE 2 – AUX2 RELAY ENERGIZES ON POWER UP AND DE-ENERGIZES ON AUX2 EVENT	Toggles between AX2 MOD1 and AX2 MOD2	AX2 MOD1	5.12.4	
5	MAN I2T or AUTO I2T	AUTO OR MANUAL I2T RESET	Toggles between MAN I2T and AUTO I2T	AUTO I2T	5.12.5	MAN 12T
6	RUN PGM or STOP PGM	ENABLES UNIT TO BE PROGRAMMED WHILE MOTOR IS RUNNING	Toggles between RUN PGM and STOP PGM	STOP PGM	5.12.6	
7	EMRG EN Or EMRG DIS	EMERGENCY OVERRIDE ENABLE EMRG EN – ENABLE EMERGENCY OVERRIDE EMRG DIS – DISABLE EMERGENCY OVERRIDE	Toggles between EMRG EN and EMRG DIS	EMRG DIS	5.12.7	
8	12 HOUR or 24 HOUR	SET REAL TIME CLOCK DISPLAY 12 HOUR – AM/PM TIME DISPLAYED 13 24 HOUR – 24 HOUR TIME DISPLAYED	Toggles between 12 HOUR and 24 HOUR	12 HOUR	5.12.8	

Figure 2 — View Settings, Continued (Use default values except where selected values are listed)

Line No.	Display	Help Message	Setting Range/Value Selection	Value as Shipped	Section Reference	Selected Value
9	MONTH XX	SET REAL TIME CLOCK MONTH	Month 1-12 (1 month increments)	——-	5.12.9	
10	DAY XX	SET REAL TIME CLOCK DAY	Day 1-31 (1 day increments)	——-	5.12.10	
11	YEAR XX	SET REAL TIME CLOCK YEAR	Year 0-99 (1 year increments)	——-	5.12.11	
12	HOUR XX	SET REAL TIME CLOCK HOUR	Hour 0-23 (1 hour increments)	——-	5.12.12	
13	MIN XX	SET REAL TIME CLOCK MINUTE	Minute 0-59 (1 minute increments)	——-	5.12.13	
14	M D Y or D M Y	SET REAL TIME DATE DISPLAY MONTH DAY YEAR OR DAY MONTH YEAR	Toggles between M D Y and D M Y	M D Y	5.12.14	
15	IQ2 EN or IQ2 DIS	IMPACC COMMUNICATIONS MODE IQ2 EN – IQ1000II EMULATION IQ2 DIS – MP-3000 COMMUNICATION	Toggles between IQ2 EN and IQ2 DIS	IQ2 EN	5.12.15	
16	RLYF TRP RLYF ALM or RLYF T+A	INTERNAL DIAGNOSTIC FAILURE ACTIVATES TRIP AND OR ALARM RELAY	Toggles between RLYF TRP, RLYF ALM and RLYF T+A	RLYF T+A	5.12.16	
17	INCT DIS or INCT EN	INCOM TRIP DISABLED OR ENABLED	Toggles between INCT DIS and INCT EN	INCT EN	5.12.17	
18	DISARMED or ARMED	ARM OR DISARM TRIP RELAY WARNING DISARM WILL NOT ALLOW TRIP RELAY TO FUNCTION TRIP WARNING MP-3000 WILL BE DISARMED UPON EXIT OF PROGRAM MODE AND WILL NOT PROTECT THE MOTOR-ENTER ARMED INTO SETTING TO PROTECT THE MOTOR	Toggles between ARMED and DISARMED	ARMED	5.12.18	
Page 13 SP TEST SETTINGS FOR TESTING INPUTS AND OUTPUTS						
1	3 PHASE or 1 PHASE	SINGLE PHASE TEST MODE OR THREE PHASE PROTECTION MODE	Toggles between 3-PHASE and 1-PHASE **Note:** 1-PHASE is for bench testing ONLY.	3-PHASE	5.13.1	3-PHASE
2	TRP ENER or TRP DENR	TRP ENER – ENERGIZE TRIP RELAY TRP DENR – DE-ENERGIZE TRIP RELAY	Toggles between TRP ENER and TRP DENR Press and hold **Reset** button to perform selected test	——	5.13.2	——

Figure 2 — View Settings, Continued (Use default values except where selected values are listed)

Line No.	Display	Help Message	Setting Range/Value Selection	Value as Shipped	Section Reference	Selected Value
3	ALM ENER or ALM DENR	ALM ENER – ENERGIZE ALARM RELAY ALM DENR – DE-ENERGIZE ALARM RELAY	Toggles between ALM ENER and ALM DENR Press and hold **Reset** button to perform selected test	——	5.13.3	——
4	AX1 ENER or AX1 DENR	AX1 ENER – ENERGIZE AUXILIARY RELAY 1 AX1 DENR – DE-ENERGIZE AUXILIARY RELAY 1	Toggle between AX1 ENER and AX1 DENR Press and hold **Reset** button to perform selected test	——	5.13.4	——
5	AX2 ENER or AX2 DENR	AX2 ENER – ENERGIZE AUXILIARY RELAY 2 AX2 DENR – DE-ENERGIZE AUXILIARY RELAY 2	Toggle between AX2 ENER and AX2 DENR Press and hold **Reset** button to perform selected test	——	5.13.5	——
6	Choose: AOUT 4 AOUT 12 or AOUT 20	FORCE ANALOG OUTPUT 4 – FORCE A 4 MA OUTPUT 12 – FORCE A 12 MA OUTPUT 20 – FORCE A 20 MA OUTPUT	Toggle between AOUT 4, AOUT 12, AND AOUT 20 Press and hold **Reset** button to output forced value	——	5.13.6	——
7	DI 1OFF OR DI 1 ON	STATE OF DISCRETE INPUT 1	Read only	——	5.13.7	——
8	DI 2 OFF OR DI 2 ON	STATE OF DISCRETE INPUT 2	Read only	——	5.13.8	——
Page 14 SP RESET SETTINGS FOR RESETTING HISTORY MODE PAGES						
1	MTR RST or PUSH RST	MTR RST – PUSH RAISE TO ENABLE MOTOR HISTORY RESET PUSH RST – PUSH RESET TO EXECUTE RESET OF MOTOR HISTORY OR PUSH RAISE TO NOT RESET	Change to PUSH RST and press Reset button, or return to MTR RST	——	5.14.1	——
2	TRIP RST or PUSH RST	TRIP RST – PUSH RAISE TO ENABLE TRIP HISTORY RESET PUSH RST – PUSH RESET TO EXECUTE RESET OF TRIP HISTORY OR PUSH RAISE TO NOT RESET	Change to PUSH RST and press Reset button, or return to TRIP RST	——	5.14.2	——

Figure 2 — View Settings, Continued (Use default values except where selected values are listed)

Line No.	Display	Help Message	Setting Range/Value Selection	Value as Shipped	Section Reference	Selected Value
4	TOT RST Or PUSH RST	TOT RST - PUSH RAISE TO ENABLE TOTAL HISTORY RESET PUSH RST - PUSH RESET TO EXECUTE RESET OF ALARM HISTORY OR PUSH RAISE TO NOT RESET	Change to PUSH RST and press Reset button, or return to TOT RST	——	5.14.4	——

Table 3—Current Transformer Selection

Part Number		Line CT Ratio	CT Terminal Connections	No. of Primary Turns	RLA Ranges	Meter Scale
2-1/2" Diameter Hole	TRR00448	150:5	X1 to X2	3	24.0 to 36.0	50
				2	36.0 to 54.0	75
				1	72.0 to 108.0	150
		180:5	X1 to X3	3	28.8 to 43.2	60
				2	43.2 to 64.8	90
				1	86.4 to 129.6	180
		200:5	X1 to X4	2	48.0 to 72.0	100
				1	96.0 to 144.0	200
	TRR00449	250:5	X1 to X2	2	60.0 to 90.0	125
				1	120.0 to 180.0	250
		300:5	X1 to X3	1	144.0 to 216.0	300
		350:5	X1 to X4	1	168.0 to 252.0	350
	TRR00450	400:5	X1 to X2	1	192.0 to 288.0	400
		500:5	X1 to X3	1	240.0 to 360.0	500
		600:5	X1 to X4	1	288.0 to 432.0	600
	TRR00451	700:5	X1 to X2	1	336.0 to 504.0	700
		800:5	X1 to X3	1	384.0 to 576.0	800
		1000:5	X1 to X4	1	480.0 to 720.0	1000
	TRR00499	1200:5	X1 to X2	1	576.0 to 864.0	1200
		1500:5	X1 to X3	1	720.0 to 1080.0	1500
4" Diameter Hole	TRR00453	1800:5	X1 to X2	1	864.0 to 1296.0	1800
		2100:5	X1 to X3	1	1008.0 to 1512.0	2100
		2500:5	X1 to X4	1	1200.0 to 1800.0	2500
	TRR00655	1000:5	X1 to X2	1	480.0 to 720.0	1000
		1200:5	X1 to X3	1	576.0 to 864.0	1200
		1500:5	X1 to X4	1	720.0 to 1080.0	1500

Examples of one and two turns through CT

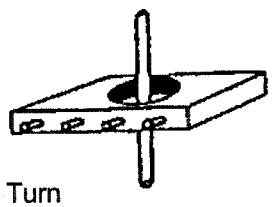

One Turn

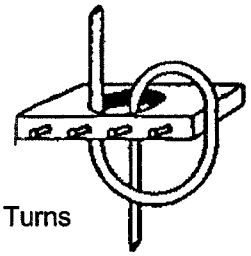

Two Turns

Figure 1 — Original Motor Protection Module Interconnections (RLY00765)

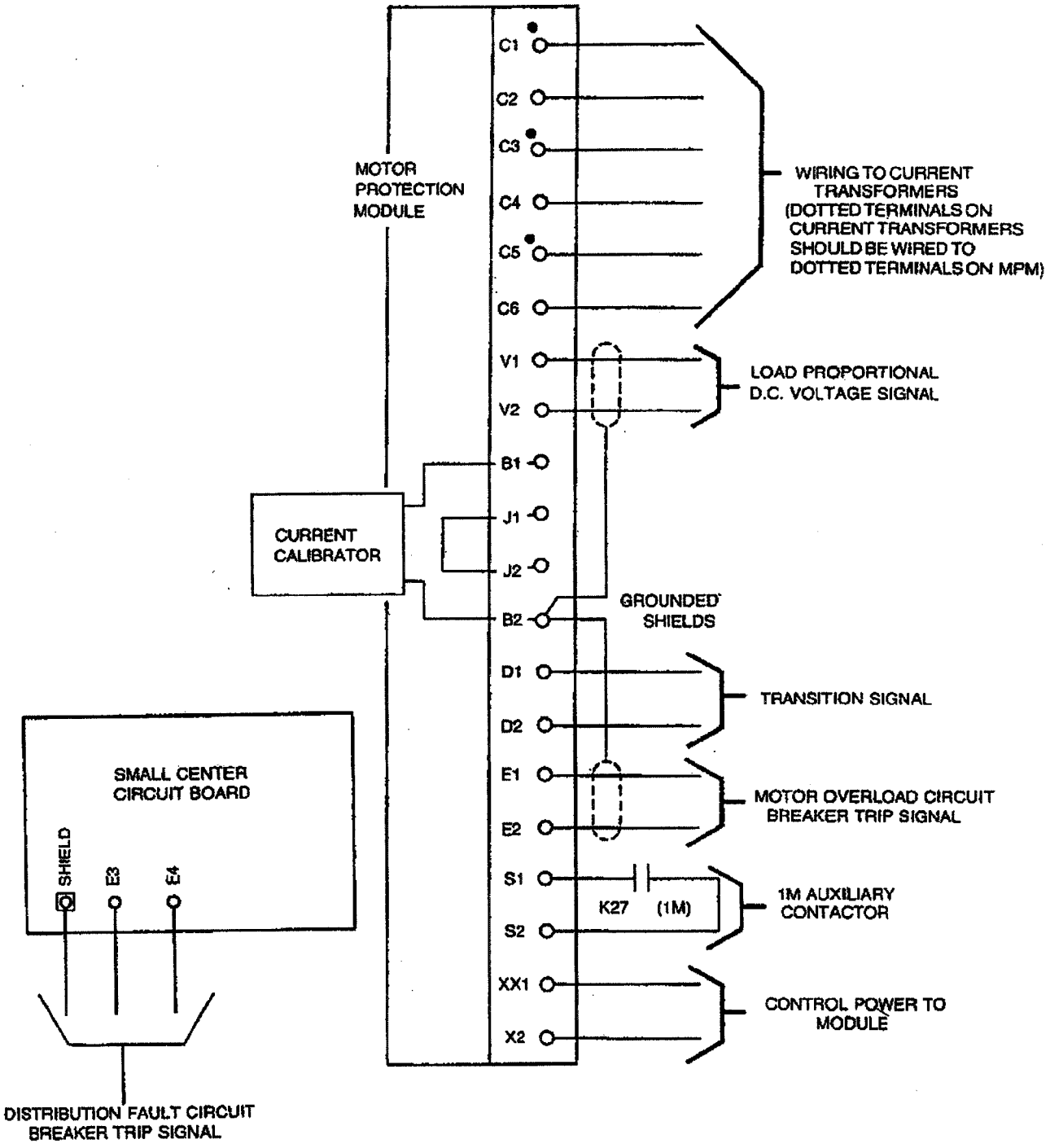

Figure 2 — Replacement Rear Panel Terminals (SHD00334)

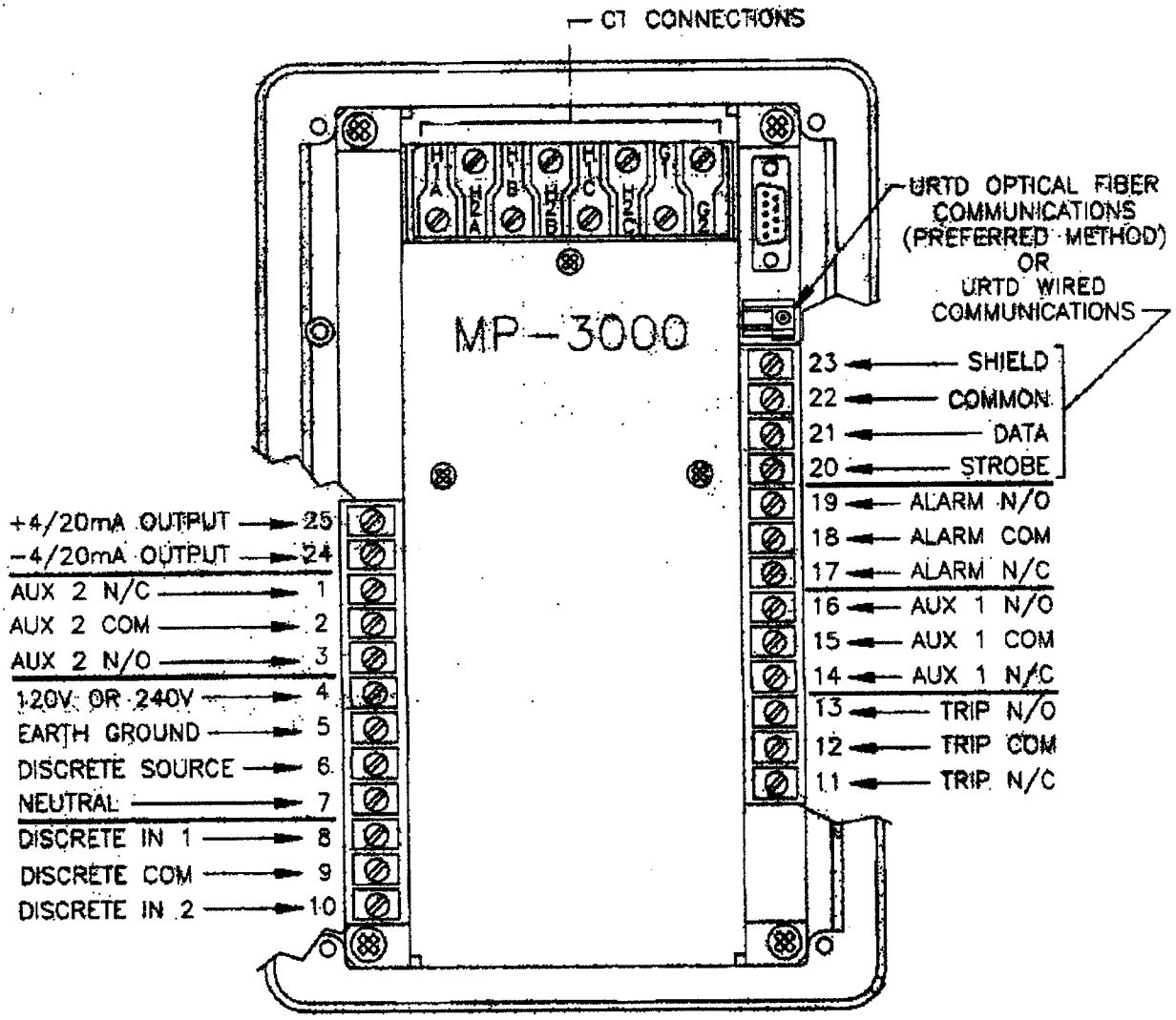

Figure 3 — Panel Cutout and Mounting Details

***Note**: Full size panel cutout included on last page.*

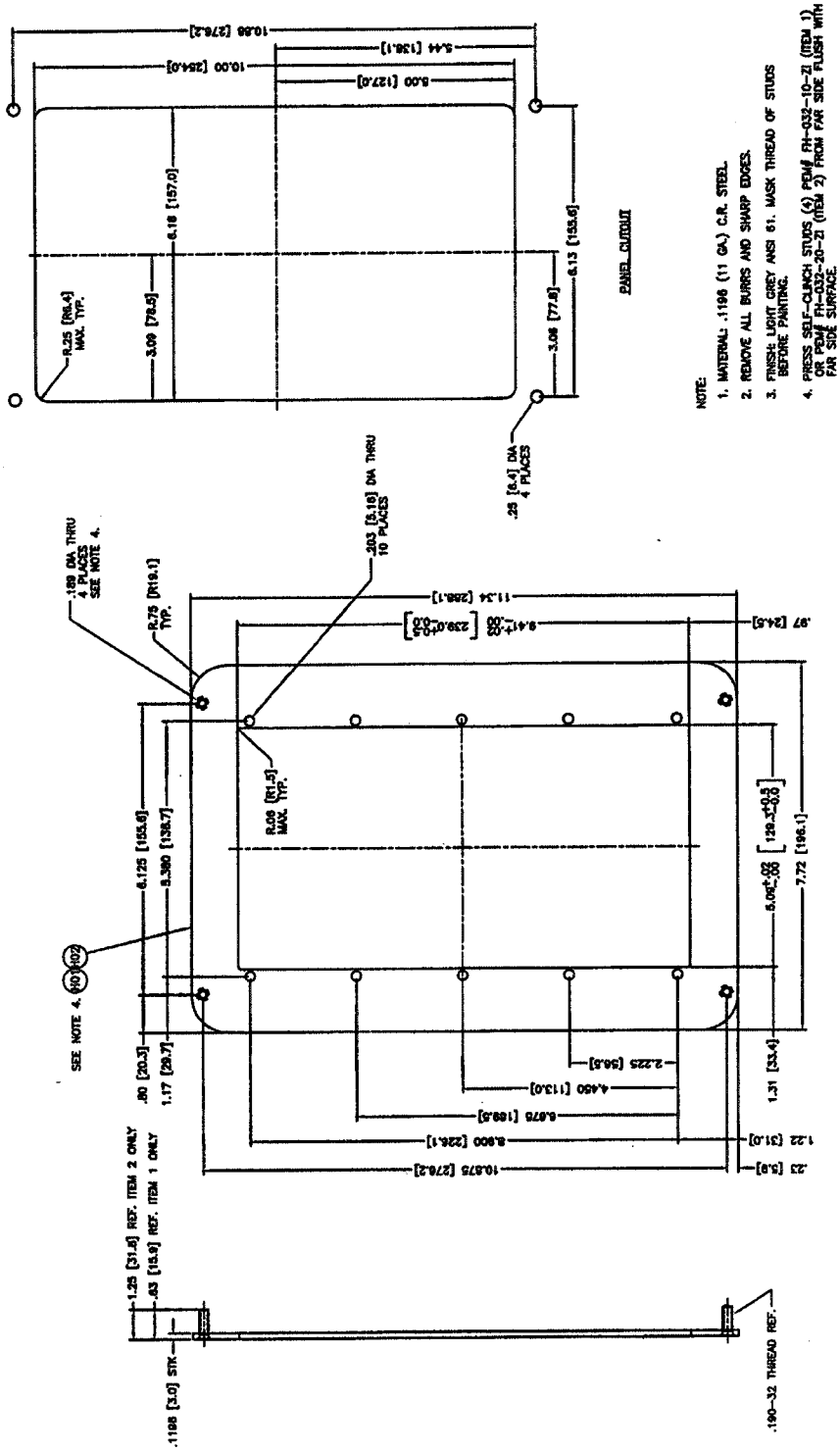

Figure 4 — TRR01622

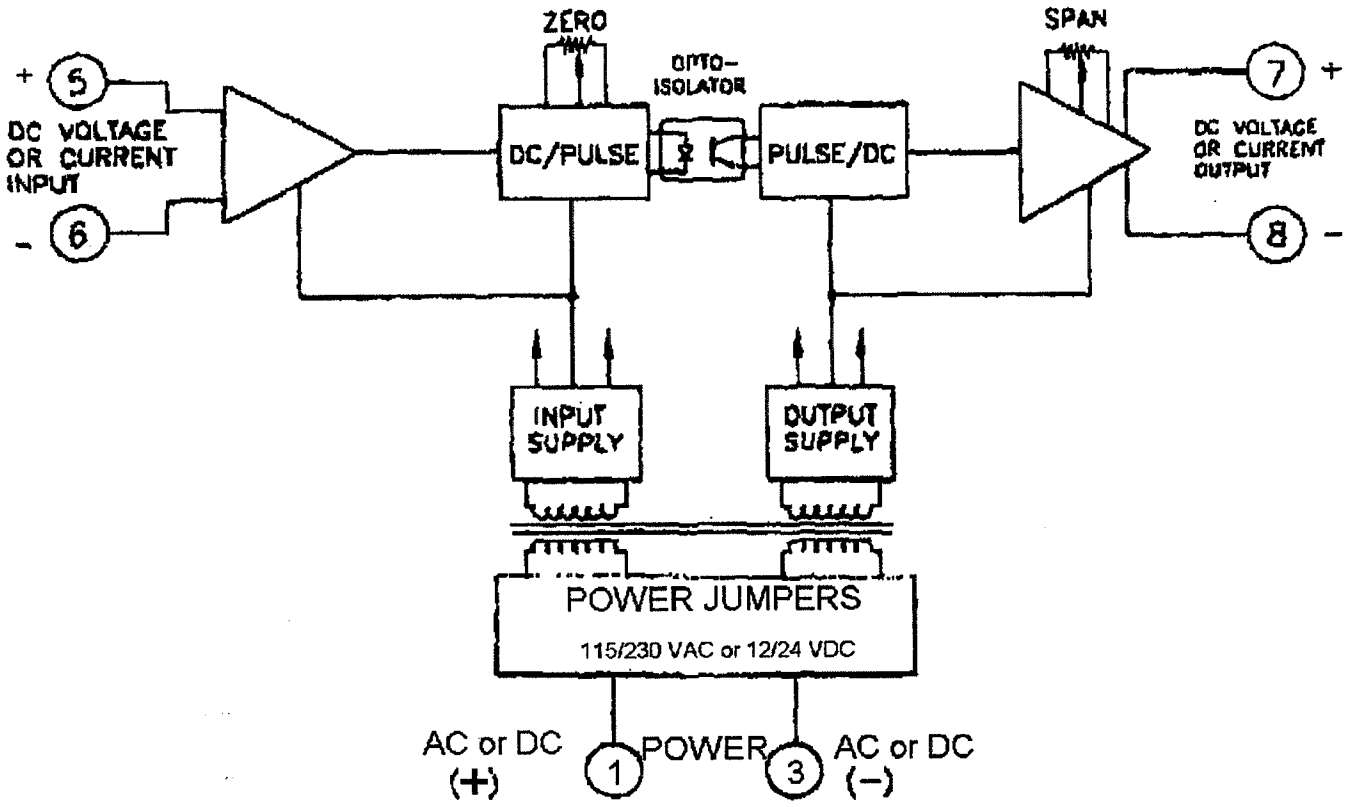

TRANE

Service Alert

Subject: CenTraVac Thrust Bearing Alignment Mark Removal

ORDER NO: CVHE-SVA07A-EN DATE: June 10, 2002

To: Field Office Managers, Field Service Managers and Parts Managers

From: La Crosse CenTraVac Technical Service

Introduction

The purpose of this Service Alert is to inform the field that a change is being implemented that removes the alignment (high spot) markings on the duplex ball bearings for the CenTraVac® thrust bearings.

Discussion

In the past, all CenTraVac duplex ball bearing sets were marked for high spots and had specific alignment marks to allow proper installation (a half of a "V" or small circles for the outer race and a straight line or small circles for the inner race). The procedure for bearing installation is covered in Service Bulletin CVH-E-SB-33A and PART-IN-43. Beginning in 2002, the bearing vendor will be shipping duplex ball bearing sets without the high spot markings (no alignment marks present). In the past, when bearing sets were received

without the alignment marks, they were rejected for installation on the CenTraVac®. Today, if the bearing set arrives with no alignment markings, this is perfectly acceptable. No special alignment of the duplex ball bearings is required for these bearings except that they are mounted on the shaft in a back to back arrangement. This means that the oil grooves in the outer race must face each other when they are installed on the shaft. No special orientation of the oil grooves is necessary. If the bearing set has alignment marks, then follow the procedure given in Service Bulletin CVHE-SB-33A and PAFT-IN-43.

Units Affected

All direct drive CenTraVac machines that use the duplex ball bearing thrust bearings (Models CVHE, CVHF, CVHG, CDHF and CDHG).

Expiration Date

This service alert does not expire until further notice.

Literature Order Number	CVHE-SVA07A-EN
File Number	SV-RF-CTV-CVHE-SVA07A-EN-602
Supersedes	New
Stocking Location	La Crosse

Trane has a policy of continuous product and product data improvement and reserves the right to change design and specifications without notice. Only qualified technicians should perform the installation and servicing of equipment referred to in this publication.

©2002 American Standard Inc. All rights reserved.

General Service Bulletin

Tracer CH530

Electronic Modules (LLID) Failures

Order Number: CTV-SVB05A-EN DATE: September 10, 2003

NOTICE: Warnings and Cautions appear at appropriate sections throughout this literature. Read these carefully.

⚠ WARNING: Indicates a potentially hazardous situation which, if not avoided, could result in death or serious injury.

⚠ CAUTION: Indicates a potentially hazardous situation which, if not avoided, may result in minor or moderate injury. It may also be used to alert against unsafe practices.

CAUTION: Indicates a situation that may result in equipment or property-damage only accidents.

Introduction

The purpose of this bulletin is to explain the corrective action of suspect or failed CH530 Electronic modules, also known as Low Level Intelligent Devices (LLIDs). Suspect electronic modules are identified in table 1 by description and date codes.

This is a Chiller reliability issue, not SAFETY HAZARD because the Main Processor (Dyna View) and Starter module are not included.

Product Models

CVHE, CVHF, CVHG, CVGF, CDHG, CDHF

Symptoms

- Loss of communication with a specific LLID.
- Loss of communication to most or all LLIDs (where the failed LLID is pulling down the entire communication buss).
- Service LED went on with magnet, but did not stay on when removed magnet.

© 2003 American Standard Inc. All rights reserved.

- Unable to bind device.
- Bound okay, but then lost binding. May or may not rebind.
- If rebound, possible loss of binding at a future time (check date code).
- Service LED or output goes on and off on its own.
- A power cycle seems to make the failure go away for a while. It will most likely fail again with time. Could be a non-recoverable failure at some point.
- Corrupted memory data such as a hardware part number or LLID date code with all zeros or random data (as viewed using TechView).

  Previous experience shows that the microprocessor most often fails on initial startup, of the controls, typically within the first few hours after power application. If you experience these symptoms follow the troubleshooting procedures below.

Sales Orders Affected

Potential affected Chillers shipped during March of 2003 through June of 2003.

⚠ WARNING

Live Electrical Components!

During installation, testing, servicing and troubleshooting of this product, it may be necessary to work with live electrical components. Have a qualified licensed electrician or other individual who has been properly trained in handling live electrical components perform these tasks. Failure to follow all electrical safety precautions when exposed to live electrical components could result in death or serious injury.

Corrective Action

- Determine if your unit has symptoms.
- Is it an affected sales order/serial number?
- Review LLID Date Codes via Binding View.
- Identify which LLIDS meet the criteria.

Two criteria must be met in order for a LLID to be considered suspect.

1. First the LLID date code must be within the range shown in Table 1. If this is true then continue with step 2.
2. The microprocessor date code must have a date code of 0305.

   Note: That there are large quantities of microprocessors with a date code of 0305 that are perfectly okay. Again, both the LLID date code and the microprocessor date code must be looked at to determine if this is a suspect LLID.

Table 1: LLIDs and Corresponding Date Codes

Trane X Code found on device(LLID)	Pride Part #	Description	TechView Min Date Code	TechView Max Date Code	LLID Date Code Label (White Sticker on LLID)
X13650726-06	SEN00981	Temperature Sensor, standard	1031100000	1031400483	0311-0314
X13650910-02	SEN01068	High Temperature Sensor	1031100002	1031200022	0311-0312
X13650728-04	BRD02096	Dual binary input	1031300000	1031400263	0313-0314
X13650729-03	BRD02103	Dual high voltage binary input	1031100000	1031300100	0311-0313
X13650731-04	BRD02095	Dual analog I/O	1031200000	1031200209	0312-0312
X13650733-05	BRD02098	Dual relay output	1031100000	1031300133	0311-0313
X13650734-04	BRD02097	Dual triac output	1031100173	1031300488	0311-0313
X13650806-03	BRD02099	Quad relay output	1031100347	1031400461	0311-0314
X13650902-01	MOD01214	High power relay output	1031200001	1031300053	0312-0313

Replacing Suspect LLIDs

Use TechView version 7.02, and JAVA JRE 1.4.1_02

- LLIDs with red status in binding view are not communicating and need to be checked for proper IPC buss connections and replaced as necessary.
- LLIDs with Green status: Check the date code using the service tool.

If a LLID is currently communicating, and has the suspect date code/serial number, we will have you UN BIND it first, then remove from the BUSS and replace it.

NOTE: If you fail to UN BIND the LLID before installation of the replacement LLID, the new LLID date code will not be shown in TechView.

Those parts **not** affected include:

DynaView, Starter, pressure transducers, Rockwell/Trane AFD communications card, Triple winding temperature input, Comm 4, Comm 5, Inlet Guide Vane Actuator, and power supply.

TechView

If the component has suspect LLID code then check the microprocessor part for date code 0305 and replace the LLID only if it has both (suspect LLID and 0305 microprocessor). If the suspect LLID meets this criteria then:

1. Note the device name (function in this application)
2. UNBIND the LLID
3. Power down IPC buss
4. Remove and replace LLID
5. Power up buss
6. Reconnect (boots DV to Converter mode and rebuilds BV)
7. Bind installed LLID
8. Note the new date code for replacement LLID

Figure 1: Tech View - Binding View

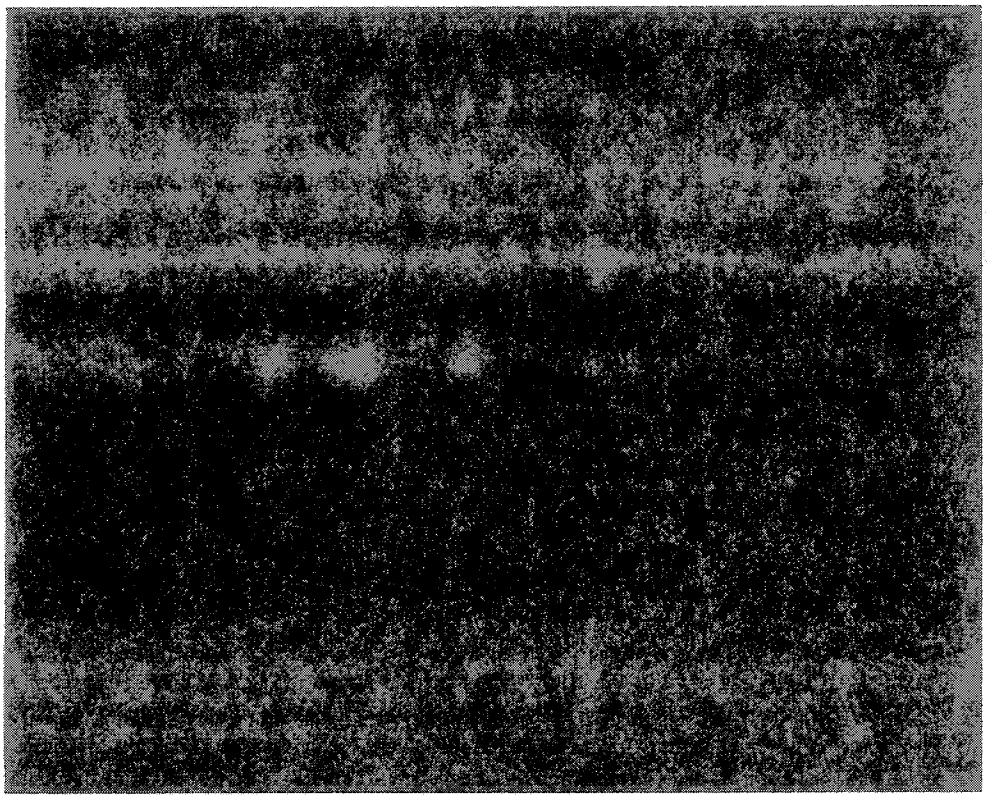

Figure 1 provides an example of TechView Binding View using the device information button (?).

Note that the date code is viewable. Check this date code with Table 1 to determine if LLID is suspect.

Parts Ordering Information

- Obtain the required parts from your local Trane Parts Center.
- Temperature sensors will require an IPC buss kit KIT 07957 to facilitate the installation of the new temp sensor. (This kit consists of two connector assemblies, a 2 foot section of unit wiring bus cable, four buss end caps and adhesive.)
- After June 3, 2003 all parts that have been shipped from the La Crosse warehouse are outside of the suspect date codes.

Questions

For general questions contact the CTV Technical Service department in La Crosse at 608-787-3943 or e-mail at TechService@trane.com.

Literature Order Number	CTV-SVB05A-EN
File Number	SLRP-CTV-CTV-SVB05A-EN-903
Supersedes	New
Stocking Location	Electronic Only

Trane
A business of American Standard Companies
www.trane.com

For more information contact your local district office or e-mail us at comfort@trane.com

Trane has a policy of continuous product data and product improvement and reserves the right to change design and specifications without notice. Only qualified technicians should perform the installation and servicing of equipment referred to in this bulletin.

Service Bulletin

Direct Drive CenTraVac Thrust Bearing Oil Feed Orifice Size Change

Order Number: CTV-SVB11C-EN DATE: October 8, 2004

Introduction

A production change has been made as a product enhancement to enlarge the oil feed orifice to the thrust bearings. We are asking that this enhancement be incorporated in all CenTraVac direct drive chillers with the center oil feed system to the thrust bearings whenever service work is performed that requires refrigerant removal.

Units Affected

All CVHE/F/G and CDHF/G chillers with center oil feed system to the thrust bearing. The design sequence (digits 10 and 11 of model number) for the units affected by this bulletin are as follows:

- CVHE — 3B through, but not including 3Y
- CVHF — 1J through, but not including 2J
- CVHG — 1B through, but not including 2B
- CDHF — J0 through, but not including 1A
- CDHG — H0 through, but not including Z0

As a note, all units with the refrigerant pump have a center feed system and will require this enhancement for the design sequences listed above.

Discussion

As a product enhancement, a production change has been made to increase the size of the thrust bearing oil feed orifice from 0.082 inches to 0.116 inches (number 32 drill size). The orifice will have a ".116" scribed on one of the flats of the hex if so equipped. This may be covered with paint and be hard to read without removing the

© 2004 American Standard Inc. All rights reserved.

paint. If service work is being performed on a center oil feed machine that requires refrigerant removal and the larger size orifice is not present, then the oil feed orifice should be removed and either drilled out to the new size or replaced with the new orifice (Trane Part Number ORF01388, which consists of the orifice brazed to a 5/8 inch copper tube with a protruding length of tubing of 3 inches).

For field modification, removal of the orifice will require cutting the 5/8 inch oil feed line with a tubing cutter and carefully removing the orifice from the bearing bracket. This pipe joint uses Loctite 242 for sealing and can be removed without the application of heat to the joint. After removing the orifice, drill out the hole to 0.116 inches using a number 32 drill bit. Be sure to check the hole for any burrs or debris after drilling and remove them if present before installation. Also, after drilling the orifice out, stamp or scribe/engrave one of the hex flats of the orifice with the number 116 to indicate the new orifice size.

Before installing the new or reworked orifice, be sure to flow dry nitrogen through the oil line if brazing is used to reconnect the line. If soft soldering with Stay-Bright silver bearing solder or equivalent, be sure not to use excessive flux at the joint. Another option is to use a 5/8 inch compression (such as Swagelock) straight connector to join the tubing, which will only require deburring the copper tubing before installation. This method will allow easy disconnection and reassembly should future work be required where the oil feed line must be disconnected.

When the chiller has been leak checked, evacuated, and charged with refrigerant; run the oil pump and check the differential oil pressure before starting the chiller. Adjust the oil pressure to maintain between 18 and 22 psid. After starting the chiller, check the oil pressure again and adjust as necessary to maintain between 18 and 22 psid.

After completing this enhancement, please be sure and contact Bob Gollnik of the Product Quality Department in La Crosse by either phoning 608-787-4110, faxing 608-787-3024 or e-mailing *Bgollnik@Trane.Com* with the unit serial number, date of completion and whether or not the unit had a thrust bearing failure or replacement during this service work.

Questions

For general questions contact the CTV Technical Service department in La Crosse at 608-787-3943 or e-mail at TechService@trane.com.

Literature Order Number	CTV-SVB11C-EN
File Number	SL-RF-CTV-CTV-SVB11C-EN-1004
Supersedes	CTV-SVB11B-EN
Stocking Location	Electronic Only

Trane
A business of American Standard Companies
www.trane.com

For more information contact your local district office or e-mail us at comfort@trane.com

Trane has a policy of continuous product data and product improvement and reserves the right to change design and specifications without notice. Only qualified technicians should perform the installation and servicing of equipment referred to in this bulletin.

TRANE

General Service Bulletin

Re-torquing of flat gaskets before start-up

Order Number: CTV-SVB17C-EN DATE: October 2005

Introduction

The purpose of this bulletin is to remind all service technicians of the importance of checking the flat gasket bolt torque's before charging and starting the chiller.

NOTICE: Warnings and Cautions appear at appropriate sections throughout this literature. Read these carefully.

⚠ WARNING: Indicates a potentially hazardous situation which, if not avoided, could result in death or serious injury.

⚠ CAUTION: Indicates a potentially hazardous situation which, if not avoided, may result in minor or moderate injury. It may also be used to alert against unsafe practices.

CAUTION: Indicates a situation that may result in equipment or property-damage only accidents.

Discussion

During the installation of any of the below listed La Crosse-built chillers, all economizer flange bolts should be re-torqued to current factory specifications as follows.

Torque all bolts using a calibrated, good quality torque wrench. All bolts shall be tightened in three stages and in a star pattern as shown in Figure 1.

© 2005 American Standard Inc. All rights reserved.

Figure 1.

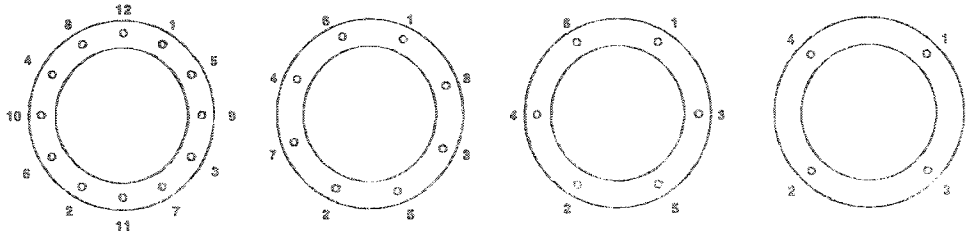

Stage 1 - Cordless Drill - Driver to 5 ft-lbs.
Stage 2 - Hand torque wrench to 15 ft-lbs.
Stage 3 - Hand torque wrench to final torque as per Table 1.

Table 1.

Flange Family Size	Torque in Ft-lbs.
4 inch	33 ± 3
5 inch	25 ± 3
6 inch	25 ± 3
8 inch	33 ± 3
10 inch	25 ± 3
All other sizes	33 ± 3

Note: Factory uses a cordless drill-driver tool to provide initial tightening of bolts. Other means can be used for this stage. Second stage and final torque values should be accomplished with torque wrench for best results.

This service should be performed once the holding charge has been removed from the unit. Once the unit is charged and or running the re-torquing procedure discussed in this bulletin may not prevent the leak from occurring.

The following flanged economizer joints are included in this bulletin:

- Compressor inter-stage (1 connection-2 stage, 2 connections-3 stage)
- Evaporator connection (orifice)
- Condenser connection (orifice)/Condenser connection sump (032 & 050 shells)

Units Affected

- CVHE
- CVHF
- CVHG
- CDHF
- CDHG

Future work being done on flat gasket leaks

There will be additional design and process changes that will be completed within the next several months. This work will supplement the refrigerant leak issues at these joints.

Labor Authorization

There will be no authorized labor given.

Questions

For general questions contact the CTV Technical Service department in La Crosse at 608-787-3943 or e-mail at *TechService@trane.com*.

Trane
A business of American Standard Companies
www.trane.com

For more information contact your local district office or e-mail us at comfort@trane.com

Literature Order Number	CTV-SVB17C-EN
File Number	SL-RF-CTV-CTV-SVB17C-EN-1005
Supersedes	CTV-SVB17B-EN
Stocking Location	Electronic Only

Trane has a policy of continuous product data and product improvement and reserves the right to change design and specifications without notice. Only qualified technicians should perform the installation and servicing of equipment referred to in this bulletin.

General Service Bulletin

CVHE/F/G and CDHF/G Thrust Bearing Center Race Retention

Order Number: CTV-SVB19C-EN DATE: June 2006

Introduction

The purpose of this informational service bulletin is to advise service and maintenance persons of a service parts change to the direct drive CenTraVac thrust bearing center race retention, and to describe the new procedures for the proper service of the assembly.

NOTICE: Warnings and Cautions appear at appropriate sections throughout this literature. Read these carefully.

⚠ **WARNING:** Indicates a potentially hazardous situation which, if not avoided, could result in death or serious injury.

⚠ **CAUTION:** Indicates a potentially hazardous situation which, if not avoided, may result in minor or moderate injury. It may also be used to alert against unsafe practices.

CAUTION: Indicates a situation that may result in equipment or property-damage only accidents.

Units Affected

All CVHE/F/G or CDHF/G chillers with compressors of 1280 NTON or less.

The design of the thrust bearing center race retention on CVHF or CDHF extended capacity chillers with 1470 or 1720 NTON compressors is not changed, so this discussion does not apply to extended capacity chillers.

Discussion

There have been some reported cases where field installation of the tab washer, while the motor is in a horizontal plane, has resulted in a tab washer that is not properly centered on the shaft. If this occurs an uneven pre-load may be applied to the bearing center races.

© 2005 American Standard Inc. All rights reserved.

Beginning Dec. 1, 2005, an upgraded self-locking thrust bearing retaining nut will be available from Trane.

The self-locking nut eliminates the use of the tab washer and the associated field service issues it can cause.

If you are installing new duplex ball thrust bearings onto a CVHE/F/G or CDHF/G compressor of 1260 NTON or less, it is recommended that you discard the older style lock nut and tab washer, and order and install the new style self-locking nut instead.

Application

Assembly procedure for the self-locking nut

1 If during a thrust bearing replacement an old type lock nut and tab washer are present, they should be discarded and a new style self-locking nut installed.

2 Verify the new style self-locking nut has a counter bore on one end and that the nut is labeled either SNSH-11 (for the small diameter shaft) or SNSH-18 (for the large diameter shaft).

Note: Only self-locking nuts sourced directly from Trane will have the necessary counter bore that allows the nut to fit properly onto the Trane motor shaft. Lock nuts purchased from other sources may not have this counter bore.

3 After the new bearings have been properly mounted and hydraulically seated onto the shaft, as per the latest revision of service bulletin CVHE-SB-33, assemble the self-locking nut to the shaft threads. The nut should be placed onto the shaft with it's finished face against the bearing. The face with the part # visible will be away from the bearing.

- Avoid the use of a hammer and spanner wrench to tighten the locknut. Use the proper size socket tool and follow the procedure as described below.

4 Torquing of the self-locking nut. Ideally, a torque wrench should be used to apply the required torque to the self-locking nut. This may be possible for the small diameter shaft units. For the large diameter shaft, a pneumatic impact wrench will be required to provide the torque required without allowing the rotor to turn in the stator. The following torque value is required:

- Small diameter shaft with SNSH-11 nut - 60 to 80 Ft.-Lb.
- Large diameter shaft with SNSH-18 nut - 160 to 200 Ft.-Lb.

Use the following method to obtain an accurate torque value and bearing pre-load when a torque wrench cannot be used:

a Torque the nut to 10% of final torque value using a torque wrench and socket tool. This will require a torque of 6 to 8 Ft.-Lb. for the small nut and 16 to 20 Ft.Lb. for the large nut. Visually inspect the nut to confirm it has seated against the bearing inner race.

b Mark the nut and inner race in a straight line to act as a reference point. Use a fine tipped marker pen or equivalent.

c Mark the inner race in a clockwise direction the following distance from the first mark:

- Small SNSH-11 nut: 0.3" to 0.5" range. (7.62mm to 12.7mm range)
- Large SNSH-18 nut: 0.5" to 0.7" range. (12.7mm to 17.78mm range)

This will provide a degree of rotation method for torquing the self-locking nut.

d Use the appropriate socket tool for the size of nut and a pneumatic impact wrench to rotate the self-locking nut until the mark on the nut falls in the range stated in step c. If an air source is not available, a large cylinder of dry nitrogen with a regulator adjusted to 120 psi (827 kpa) can be used to power the pneumatic impact wrench. A 3/4" drive wrench is required for the large self-locking nut.

Important: When the nut is fully torqued against the bearings, the brass shoes of the nut must NOT align with the keyway of the shaft. If this occurs you must loosen the locknut, then re-torque it to a value that is still within the specified range. Contact LBU technical service if you are unable to achieve a position where the locknut shoes properly clear the keyway.

e After the self-locking nut has been correctly pre-loaded, begin to secure the nut by tightening each of the set screws to a value that is 1/2 of the recommended torque. Then tighten each set screw to it's full recommended torque.

- Small SNSH-11 nut: Tighten the 3 set screws to 17.5 in-lb of torque, then tighten the 3 set screws to 35 in-lb (2.92 ft-lb) of minimum torque. The set screws provided with the SNSH-11 nut will be either allen type or TORX-Plus. If allen type, use a 3/32 allen socket. If TORX-Plus, use a 10-IP socket.
- Large SNSH-18 nut: Tighten the 3 set screws to 80 in-lb of torque, then tighten the 3 set screws to 160 in-lb (13.3 ft-lb) of minimum torque. The set screws provided with the SNSH-18 nut will be either allen type or TORX-Plus. If allen type, use a 5/32 allen socket. If TORX-Plus, use a 25-IP socket.
- Use only socket tools that are in good condition to avoid stripping out the set screws.

f Complete the thrust bearing and motor assembly following the remainder of the procedures as shown in the latest revision of CVHE-SB-33.

Removal Procedure for the Self-Locking nut:

1 Remove the torque on the 3 set screws of the self-locking nut by loosening them ½ turn. Use the proper allen or TORX-Plus socket, ensure it is in good condition to avoid stripping out the set screws.

2 Re-set the internal brass keys of the self-locking nut by tapping on the nut at the 3 set screw locations. Use a non-marring hammer. Use great care to avoid damage to the motor coils, shaft threads, etc.

3 Using a spanner wrench and hammer, carefully loosen the self-locking nut ¼ turn to remove the bearing pre-load, then repeat step 2.

4 Using a spanner wrench and hammer, carefully remove the self-locking nut from the shaft. If the self-locking nut does not begin to rotate freely you may need to repeat steps 2 and 3 several more times. Extra force on the spanner wrench or socket may be needed to help wear and release the internal brass keys.

5 After removal the self-locking nut must be discarded. The self-locking nut cannot be reused, always install only new self-locking nuts.

Parts Identification

- NUT01056, Self-Locking Nut SNSH-11 for the small diameter shaft, use with thrust bearings: BRG00913, BRG00609, BRG01209, BRG01507, BRG01583, and BRG01585.
- NUT01057, Self-Locking Nut SNSH-18 for the large diameter shaft, use with thrust bearings: BRG00914, BRG00610, BRG01210, BRG01508, BRG01584, and BRG01586.

In addition to being available separately, beginning in 1st qtr 2006 the self-locking nut will be included in thrust bearing sets ordered from Trane parts. The standard locknut and tab washer will no longer be included with thrust bearing sets.

Service Tools

- For small nut NUT01056, use socket tool TOL02826
- For large nut NUT01057, use socket tool TOL02827

Material and Labor Authorization

No material or labor is authorized.

Material Disposition

There are no materials to return.

Recommended Action

Discard the older design locknut and tabwasher when changing or installing thrust bearings onto CVHE/F/G and CDHF/G chillers with compressors of 1280 NTON or less. Use only the new self-locking nut.

Expiration Date

There is no expiration date for this bulletin.

Questions

For general questions contact the Product Technical Service department in La Crosse at 608-787-3943 or e-mail at TechService@Trane.com

Literature Order Number	CTV-SVB19C-EN
File Number	SL-RF-CTV-CTV-SVB19C-EN-0606
Supersedes	CTB-SVB19B-EN
Stocking Location	Electronic Only

Trane
A business of American Standard Companies
www.trane.com

For more information contact your local district office or e-mail us at comfort@trane.com

Trane has a policy of continuous product data and product improvement and reserves the right to change design and specifications without notice. Only qualified technicians should perform the installation and servicing of equipment referred to in this bulletin.

General Service Bulletin

Vibration Analysis for CVHE, CVHF & CVHG

Order Number: CTV-SVB29A-EN DATE: August 2006

NOTICE: Warnings and Cautions appear at appropriate sections throughout this literature. Read these carefully.

⚠ **WARNING:** Indicates a potentially hazardous situation which, if not avoided, could result in death or serious injury.

⚠ **CAUTION:** Indicates a potentially hazardous situation which, if not avoided, may result in minor or moderate injury. It may also be used to alert against unsafe practices.

CAUTION: Indicates a situation that may result in equipment or property-damage only accidents.

Introduction

This service bulletin outlines the proper method for checking vibration levels on model CVHE, CVHF, CVHG, CDHF, and CDHG compressors, and also discusses the interpretation of vibration levels or signatures that may be encountered.

Discussion

This bulletin describes typical routine vibration analysis processes that can be performed to evaluate thrust bearing condition, or to determine if a rotational imbalance is present.

This bulletin does not directly address the determination of inboard or sleeve bearing condition in centrifugal chillers, as this is best done by an oil analysis program. This bulletin also does not address vibration or noise caused by aerodynamic, aero-acoustic, or structural resonance issues within the chiller, and it does not address the use of current analysis to determine motor or bearing faults.

© 2006 American Standard All rights reserved

Thrust Bearing Condition Analysis

While it is not a requirement for the proper routine maintenance of a CenTraVac chiller, vibration analysis is recommended as a valuable non-destructive method of determining the condition of the compressors bearings and for detecting any imbalance of the rotating components. Vibration analysis is often incorporated into the chiller's periodic maintenance program or "service contract" terms.

The thrust (or "outboard") bearing used in CVHE/F/G and CDHF/G chiller compressors is an anti-friction type, "duplex" ball bearing. As a result of this bearing's properties, the classic oil analysis program - successfully used to evaluate the condition of the babbitted inboard bearing - does NOT reliably indicate the condition of the thrust bearing.

"AUDIO" CHECK. The simplest and least expensive method of checking for thrust bearing failure is to listen to the bearing during operation and coastdown. A failed bearing will "howl" while the unit is running and "click" during coastdown. While the howling noise is readily apparent, the best way to listen for "clicking" during coastdown is to place a stethoscope against the thrust bearing inspection cover; the "clicking" sound will be most noticeable just before the rotor stops turning.

Mechanics stethoscopes for listening to machine noises are commonly available from automotive supply stores. If necessary, a screwdriver can be used in lieu of a stethoscope; simply place the tip of the screwdriver against the inspection cover, then press your ear lightly against the handle.

If the "audio" method of bearing evaluation indicates that the thrust bearing is bad, but unit vibration is not severe, the bearing will usually continue to be operable for several months before failing.

VIBRATION ANALYSIS. Another method to determine thrust bearing condition is by the use of a "vibration analyzer". There are several popular makes of analyzer equipment, and this discussion will try to remain general in nature in order to provide the best coverage.

Important!: While vibration analysis results indicating high vibration levels may be symptomatic of a potential bearing problem, it may not be necessary to change out the thrust bearing unless the audible symptoms described above are also present. View Figure 1, for example, a chiller with bearing vibration in the yellow caution range may continue to provide valuable service life if it does not also have audible symptoms.

It is sometimes difficult to define "good" or "bad" readings for a vibration analysis, since bearings of identical quality in similar units may well show different levels of vibration output. Most commonly, vibration analysis is used to monitor changes in the bearings quality over its entire life.

To correctly monitor a thrust bearing, it is important to record vibration levels when the chiller is fairly new; this establishes a "baseline" vibration level that can be used for comparison with future vibration level checks. It is also recommended that vibrations readings be taken with the chiller operating as fully loaded as is possible. Readings taken on a lightly loaded chiller (running less than 50% of capacity) can be misleading. Always check at higher loads if possible.

Note that it is important for the unit to be operating at similar conditions each time the bearing condition is checked. For this reason it is advisable to record vibration level readings at various operating load points.

Once the "baseline" is established, vibration analysis can be used to periodically check for bearing deterioration.

For units equipped with variable speed motor drives, it is recommended to manually override the motor speed command to 60Hz during the recording of vibration data. Readings taken at the same speed will be easier to use for trending, and will allow for the easier interpretation of data.

Equipment Recommendations

The vibration recording equipment used should be capable of recording or plotting vibration data or signatures, on single or on multiple channels. Equipment with the ability to plot "spectrums" and "waveforms" to allow the easiest review of data is highly desirable. NOTE: There is a great range of vibration analysis equipment available for purchase on the market, some with greater ability than others. Equipment should be selected based on the results expected, the amount of investment required, and the amount of expertise needed to operate it and to understand the result. Simpler less expensive equipment may be acceptable in many cases.

Any equipment used should, at a minimum, be capable of:

- Recording data in the frequency ranges of 0-3,000 Hz.
- Be capable of recording and displaying data at a minimum resolution of 1600 lines.
- Recording and plotting (as a spectrum) velocity in in/sec and mm/sec, in the range listed above.
- Recording and plotting (as a waveform) acceleration in g's.

La Crosse CenTraVac Product Support presently uses CSI vibration equipment.

Data Collection Points

Data should be collected from the appropriate transducers placed on the equipment in the locations described below. The transducers may be magnetic mounted if desired, though a more securely mounted (bolted, epoxied, etc.) transducer may provide better results for bearing analysis. Be aware that transducers are generally very limited in accuracy at the higher frequency ranges, and some higher frequency results can be misleading if care is not taken.

Collect data from:

- Axial - Point A on Figure 1. Thrust bearing end of the compressor motor. Axial data can be very helpful in the determination of thrust bearing issues. Because bearing fault frequencies may be very high it is recommended that magnetically mounted transducers be avoided when taking axial readings. If possible, use the transducer mounting stud that is present on most bearing inspection cover bolting systems. Also, do not take axial readings near the center of the bearing inspection cover since it can act as a "drum head" and provide erroneous readings.
- Vertical Motor End - Point B on Figure 1. Place the transducer on the motor cover at the 6 o'clock position, close to the bearing inspection cover. May indicate thrust bearing condition or rotational imbalance.
- Radial Motor End – Point C on Figure 1. Place the transducer on the motor cover at the 4:30 o'clock position, close to the bearing inspection cover. May indicate thrust bearing condition or rotational imbalance.
- Horizontal Motor End - Point D on Figure 1. Place the transducer on the motor cover at the 3:00 o'clock position, close to the bearing inspection cover. May indicate thrust bearing condition or rotational imbalance.
- Vertical Compressor End - Point E on Figure 1. Optional. Generally used to determine rotational imbalance rather than thrust bearing issues. Readings affected by electrical noise.
- Horizontal Compressor End - Point F on Figure 1. Optional. Generally used to determine rotational imbalance rather than thrust bearing issues. Readings affected by electrical noise.

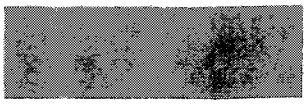

Figure 1. Recommended Vibration Data Collection Points

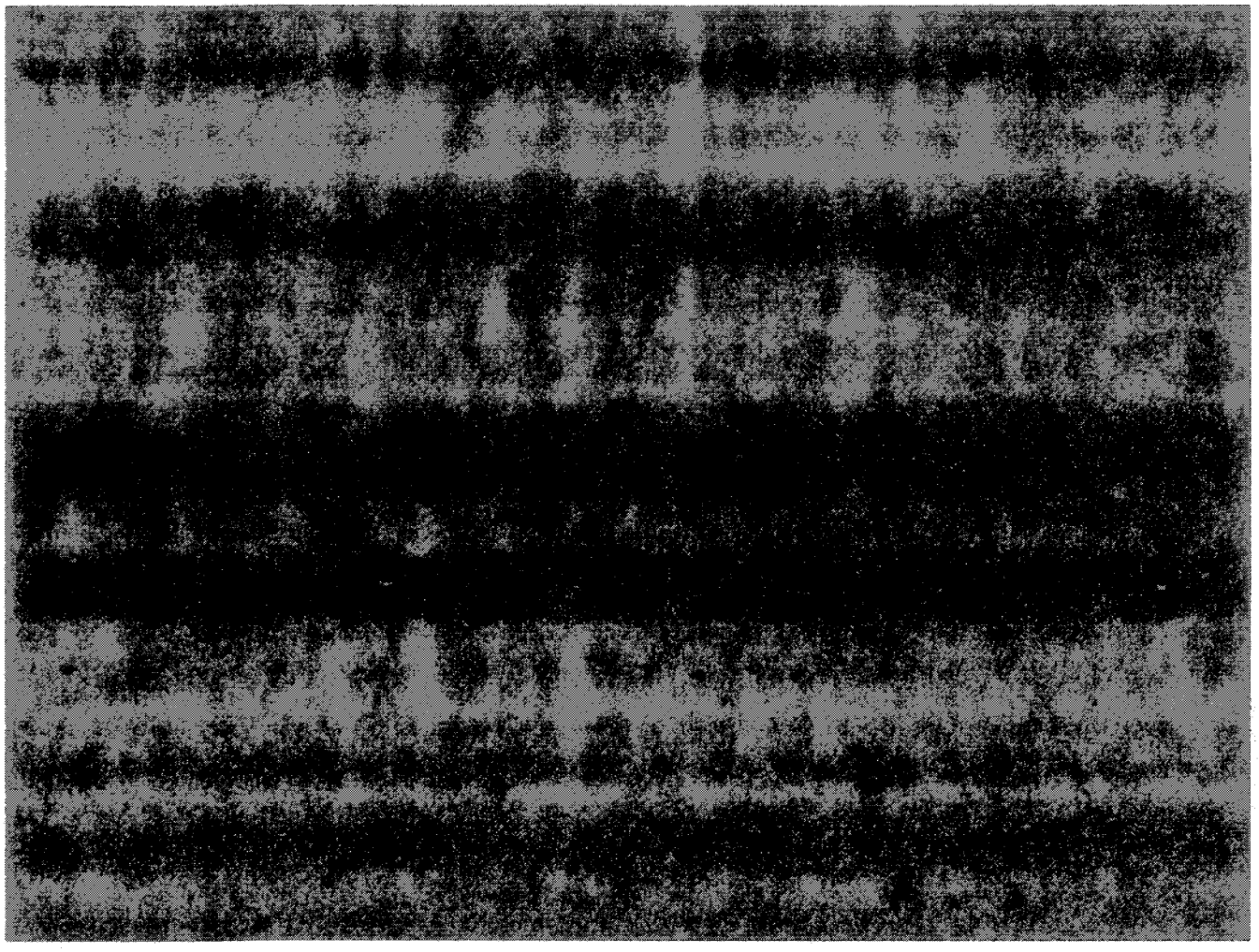

Thrust Bearing Acceptance Criteria - Velocity

While it is difficult to define pass/fail criteria for rolling element bearings, operation of any centrifugal chiller with a vibration level in excess of 0.25 in/sec (6.35 mm/sec) peak at rotational speed (50 or 60 Hz) is not recommended. The chiller should be secured and the cause of the vibration determined and corrected. For vibration limits at other frequencies refer to figure 2 & figure 3.

Figure 2. Recommended Limits

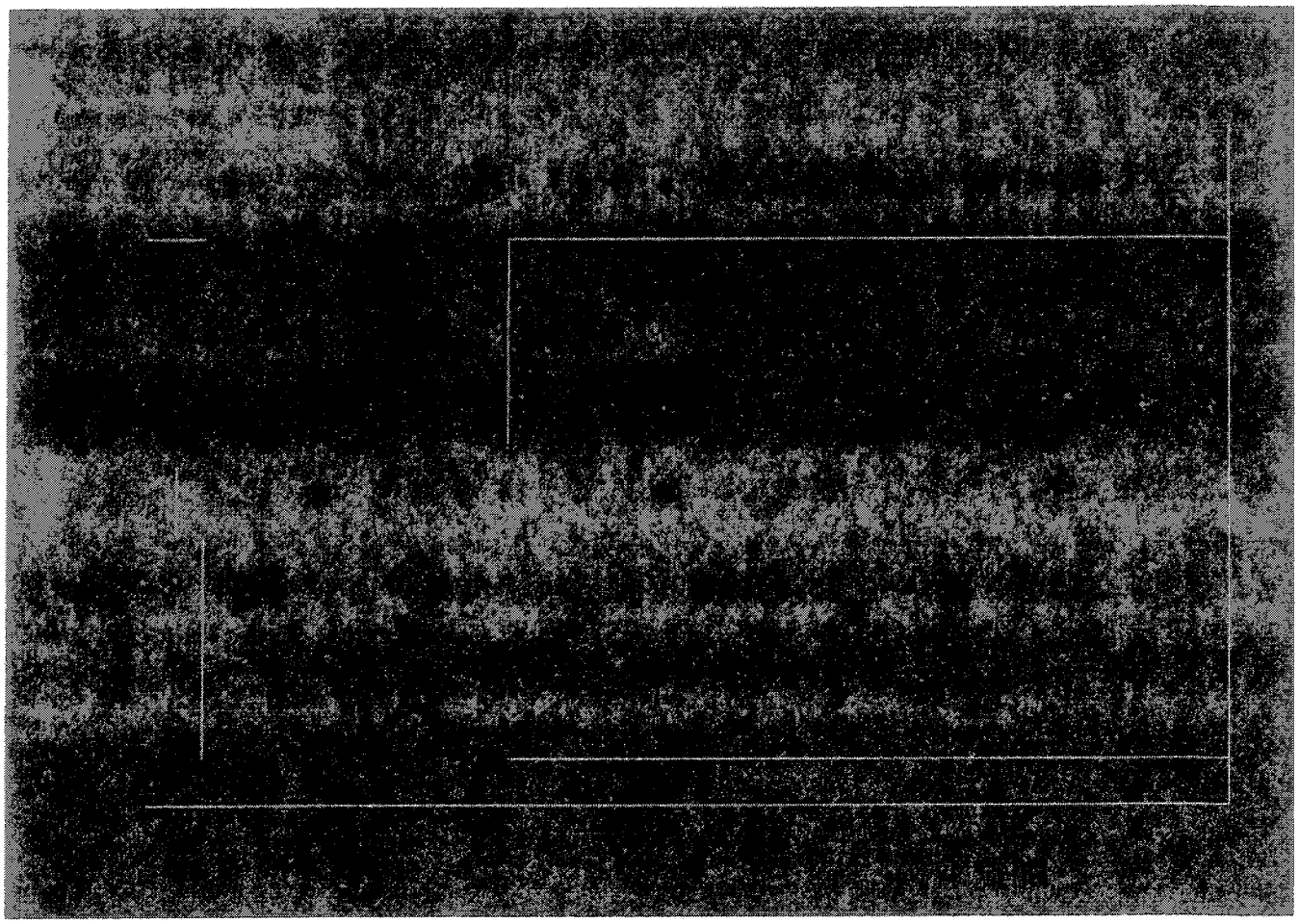

Green – acceptable vibration levels, no action recommended

Yellow – caution, closer monitoring of trends recommended

Red – warning, a bearing failure or rotational imbalance may be present

Figure 3. Recommended Limits

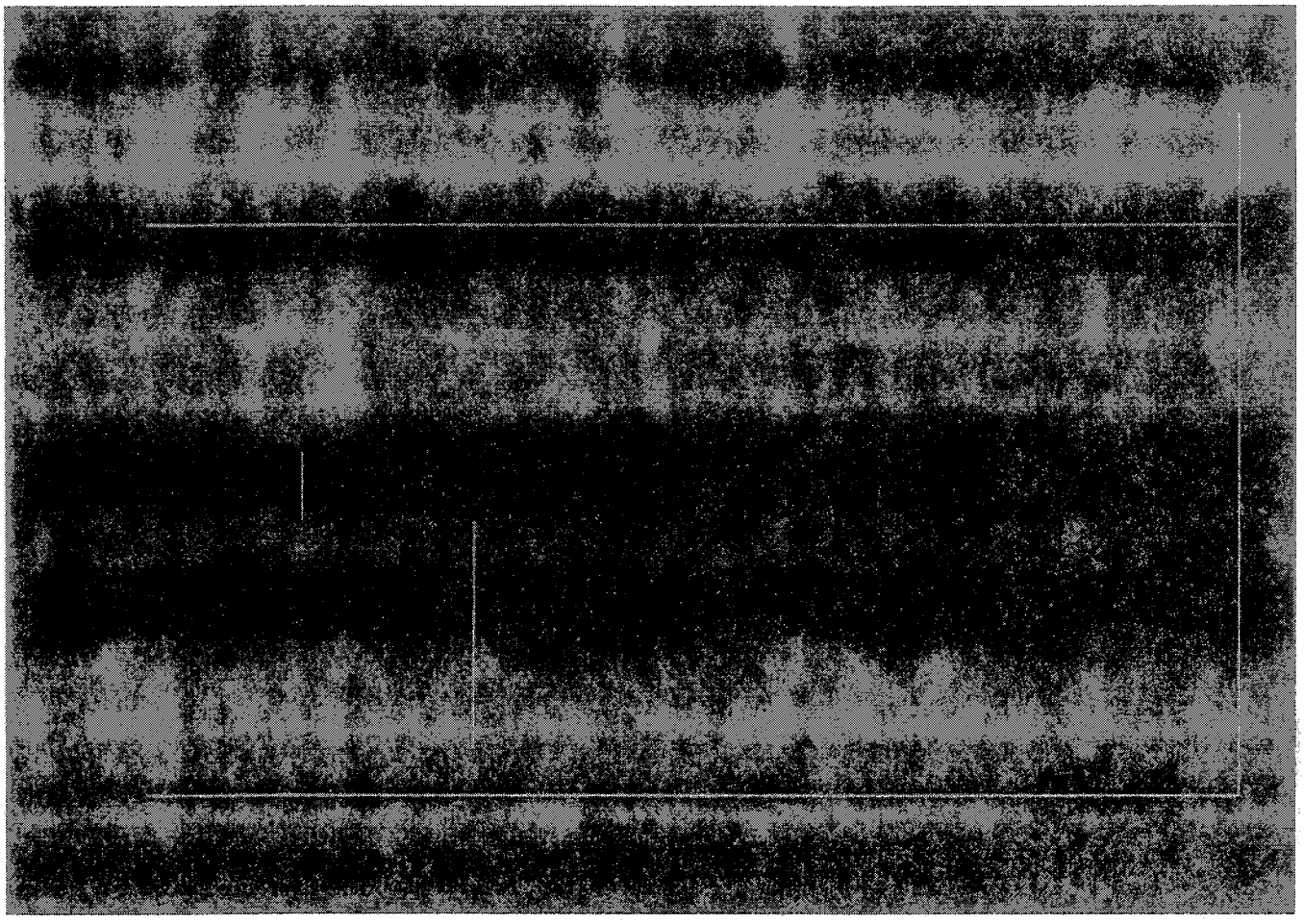

Green – acceptable vibration levels, no action recommended

Yellow – caution, closer monitoring of trends recommended

Red – warning, a bearing failure or rotational imbalance may be present

Thrust Bearing Characteristics

The data below is intended to assist a vibration analyst when identifying sources of thrust bearing vibration energy. Refer to tables 1 and 2.

Table 1. Ball Bearing Geometry

Bearing	Pitch Dia.(In)	# Of Balls	Ball Dia.(In)	Alpha (Contact Angle Deg)
BRG00913 BRG00609 BRG01209 BRG01507 BRG01583 BRG01585	3.4488	11	0.8437	40

Table 1. Ball Bearing Geometry

Bearing	Pitch Dia.(In)	# Of Balls	Ball Dia.(In)	Alpha (Contact Angle Deg)
BRG00914 BRG00610 BRG01210 BRG01508 BRG01584 BRG01586	5.5118	12	1.25	40
BRG01258	5.8071	12	1.3125	40

Table 2. Common Ball Pass/fault Frequencies
As orders of shaft turning frequency.

Bearing	Cage	Inner Race	Outer Race	Roller Spin	Roller Defect
BRG00913 BRG00609 BRG01209 BRG01507 BRG01583 BRG01585	0.4063	6.5307	4.4693	1.9721	3.9442
BRG00914 BRG00610 BRG01210 BRG01508 BRG01584 BRG01586	0.4131	7.0424	4.9576	2.1382	4.2764
BRG01258	0.4131	7.0424	4.9576	2.1382	4.2764

*values are approximate

Common Fault Indications

The CenTraVac product line has a lot of variation, the guidelines provided in this discussion are of a general nature and should be applied with caution

Loss of Thrust Bearing Preload - High radial vibrations at 1x operating speed. Loss of pre-load can reduce the 1st natural frequency of the shaft to running speed, resulting in excitation of the critical speed and very large shaft orbits.

Bearing Misalignment – May see high axial indications at 2x operating speed.

Electrical or line issues, may see indications at 2 x line frequency, if increasing over time consider electrical testing.

Thrust Bearing Damage - High axial vibrations at the ball pass frequencies and their multiples may be an indication of possible internal bearing damage.

Outer race clamping or distortion, may see indications or mounding at 500-600 Hz?

Motor eccentricity – High vertical and horizontal indications at 1x or 2x operating speed.

Open Rotor – Indications sometimes seen at ~44x (will vary due to rotor configuration or # of bars) operating speed. Sidebands may appear at 1x line frequency plus/minus 2x slip. To determine possible rotor bar defects using a vibration analyzer it will be necessary to set the analyzer for an 80Hz maximum scale and with a minimum of 1600 lines of resolution and preferably 3200 lines, to properly observe for the sideband frequencies around rotor shaft turning speed. Current analysis is a better indicator of rotor bar issues. Also be observant for other indicators of rotor issues (fluctuating oil

pressure, fluctuating amps, noise, longer acceleration times, more slip, etc.). Refer to CTV-SB-48 (latest revision)

Operating Imbalance – High vertical and horizontal indications at 1x operating speed.

Compressor Component Rub – 1/2x

Copper Plating - Indicated by higher frequency faults at all reading points. High g's overall. High energy at 8-12 kHz. May see an indication appear at the cage fault frequencies.

Definitions

Acceleration. the rate of change of velocity of a mechanical system. Commonly measured in units of "g" in English units. 1g = 386.4 in/s squared.

CPM. Cycles Per Minute. 60 cycles per minute = 1 cycle per second = 1 hertz.

Displacement. The distance that an object moves when vibrating.

Frequency. the number of times that an event repeats itself in a unit of time. Units commonly used are hertz (cycles per second) and CPM (cycles per minute).

Fundamental Frequency. the first frequency in a series of harmonic frequencies. Shaft turning speed is generally used as the fundamental frequency for bearing analysis.

Harmonic. an integer multiple of a fundamental frequency.

Hertz, or Hz. a unit of frequency equal to cycles per second.
1Hz = 1 cycle per second = 60 cycles per minute.

Mil(s). a unit of displacement equal to 1/1000 of an inch.

Order. a multiple of the shaft turning frequency.

Resolution. the number of lines displayed in a spectrum, for a given frequency range.

Spectrum. The frequency domain representation of a signal. Generally represented as magnitude against frequency, over a defined frequency range.

Velocity. the rate of change of displacement of a mechanical system. Typical units are inches per second.

Waveform. analog or digital representation of a signal displayed as a plot of level against time.

Questions

For general questions contact the CTV Technical Service department in La Crosse at 608-787-3943 or e-mail at *TechService@trane.com*.

Literature Order Number	CTV-SVB29A-EN
File Number	SL-RF-CTV-CTV-SVB29A-EN-0806
Supersedes	New
Stocking Location	Electronic Only

Trane
A business of American Standard Companies
www.trane.com

For more information contact your local district office or e-mail us at comfort@trane.com

Trane has a policy of continuous product data and product improvement and reserves the right to change design and specifications without notice. Only qualified technicians should perform the installation and servicing of equipment referred to in this bulletin.

8

Tech Notes
Black Classic Panel

All of the panel circuit breakers have a 30 millisecond time delay so the U-2 gets power first.

K-5 – Oil pump time delay

K-6 – Oil pressure prove relay

K-3 – A back around relay to provide power for CB-1 coil

K-4 – Relay to start condenser water pump

Starter fault indicator breaker on panel front – trips if the starter opens when it has a run or start command. Possible causes:

loose control wires in control panel or starter panel
overload trip (causes breaker on starter to tip also)
loss of three phase (causes breaker for distribution fault to trip also)

A-3 – Vane close switch in vane operator motor

Wire points 8 to 9 – Flow switch wired in here, recommend time-delayed switch

Computer start/stop should be wired in at 9 to 10

Condenser water flow switch time-delay type wired in 11 to 12

Motor sensors 265°F = 115 ohms

Original U-1 temperature controller – It's sensor is polarity sensitive. Make sure you wire it correctly. Sensor cable should not be in a conduit with other power wires.

U-1 – Receives a voltage signal from solid-state overload. If current calibrator in the solid-state overload is set up correctly, you should see 8.25 VDC at U-1 at RLA – V1 to V2 on U-1.

Freestat is two stage – First stage causes had unload terminal 84 on U-1 – line 40. Second stage shuts chiller down!
This freestat is not ambient compensating. Therefore, if the equipment room is real cold or hot, the set point may drift. You can cover the capillary tube with insulation to reduce the bad effects.

K-5 – N.O. contacts on line 43 – Pre-lube
K-5 – N.C. contacts on line 44 – Post-lube

Terminal 31 – S on oil pump
30 – R
2 – C

K-15 – Oil pump current relay
Remember relay position sensitive

If you replace the oil pressure switch, don't use any switch with cap tubes. This causes sluggish response.

During evacuation service, pull F2 fuses so the oil pump can't try to start and burn out the motor because of the deep vacuum. This can occur if the post-lube time was not complete when the unit had the main power turned off.

During stop inspection, don't forget to check the little gears and hold down the wire on the vane operator. Lube the gears with a little grease.

Tech Notes
UCP-1
1985 - 1994

1 - U-1	Relay Output Board
1 - U-2	Power Output Board
1 - U-3	Micro Module
1 - U-4	Option Module - added in late production years (chilled water reset, etc. on this board

When you have a failure code, don't forget to write it down before you reset. If you don't and you reset, the code is gone!

If the oil pump switch is in the on position not automatic, the chiller will not start.

Pre-lube	15 seconds to 48 seconds
Post-lube	2 minutes

To check service setting, the vane position switch on the Micro must be in the "hold position to read items".

A-70 Anti-recycle time ranges from 4 minutes to 30 minutes based on winding temperature sensors

A-72 Start must occur and get to code A-74 by 27 seconds or a lock out will occur.

A-78 Look at current for swings - 15 minute time frame

A-100 Later unit code, see page 36 of CVHE-SB-22A

1-U-3 Chilled water reset module has three more knobs than the standard unit, see page 19 of CVHE-SB-22A. Must be in auto remote to enable reset.

Motor sensors can be removed from circuit with 75 ohms at 75°F one half watt. Watch out, don't jump out more than one without looking for some motor problem. i.e. grounding out, wet refrigerant, etc.

Starter prove contacts must report back to 1-U-3 in 2 seconds or starter failure code will result. Check auxiliary contacts on contactor. Must be mounted on the contacts near the coil. These contacts close a few milliseconds sooner than the other contacts in the auxiliary stack.

1-P4 on 1-U-3 is labeled from left to right 1 to 11 →
1-P5 on 1-U-3 is labeled from left to right 1 to 21 →
1-P1 on 1-U-2 is labeled from right to left (backward) 10 to 1 ←

Low voltage only in top of panel!! Nothing over 30 VAC

TECH NOTES

Balance Nuts
CVHE Chillers

There is quite an issue with balance nuts for CVHE units. I hope this data supplied by American Chiller will help clear up what is needed for these units.

For units built 1992 and after: NUT-838 for size 058 -125. NUT-839 for size 025 - 050.

For units prior to 1992: NUT-392 for size 056 - 125. NUT-393, NUT-394 and NUT-396 for size 020 - 050. So, if we are doing balance work on size 020 - 050, we will need all 3 nuts.

CVHE Tech Notes

When retrofitting a CVHE to a UCP 2 control panel, Trane has found that the old flat style oil heaters that are 1000 watts total are too much wattage for the contact in the microprocessor relay module. The contact will only handle a maximum of 750 watts. The fix is to install a pilot relay on the oil heater contact relay output and wire the heater to the contacts of the new relay.

When replacing an oil pump on a CVHE or CVHF without the refrigerant pump, the amperage has changed. The original oil pump pulled 4.9 amps. The replacement pump pulls 6.25 amps. The new motor is a part # MOT-2989. If you had the original CVHE with the screw in fuses, it will blow the fuses. To fix this, you need to add a fuse holder and fuses to the circuit. The Trane part number for the holder is HLD-87 and the fuses are FUS-547. Please be aware of the amperage change. You may come upon a unit that has the new style pump yet the nametag shows 4.9 amps as full load.

Bryan

Tech Notes

When we do stop inspections on CVHE/CVHF units, there is an allen screw on the first stage vane arm. Don't forget to remove it and put a couple drops of compressor oil in it. This lubricates the o-rings on the shaft and may increase their life and reduce refrigerant leaks caused by dry worn o-rings. (CVHE-OM-8B pg. 79)

CVHE/CVHF motor shafts have a step down on them where the first stage impeller sets. The impellers have been redesigned to be more aerodynamic.

Impellers on the CVHF extended capacity (i.e. single compressor large tonnage around 1470 to 1720 tons) have internal splitter vanes like the Carrier 19X series, but of course it is a closed face impeller.

The large extended capacity units (CVHF 1470 - 1720 single compressors) have two stepper motor vane actuators. It is currently required for equal vane movement. But other options may occur. One motor is not strong enough and two motors provide more accurate vane movement without slop due to linkages.

Impeller locking nuts are balance type nuts on all CVHE and CVHF's, etc.

Oil coolers are required on units over 350 tons.

Leaving chilled water and refrigerant sensors should be checked annually in an ice bath. These two sensors can be calibrated by software up to 2°F on UCP-2. (CVHE-OM-8B pg. 77)

The two eductors on the CVHE/CVHF should have the vanes set 1 ½ to 2 turns open on the evaporator and suction cover lines. If they are open all the way, they could cause cold oil sumps. Eductor lines may frost therefore they are insulated. (CVHE-OM-8B pg. 18)

Bearing sensors are standard on all units that have lower oil sump with refrigerant motor cooling pump which returns the refrigerant back to the condenser.

Oil pressure transducers are good for -15 psig to 35 psig. If you exceed 35 psig you may damage the sensor.

Minimum chiller pressure differential between the condenser saturation pressure and the evaporator saturation pressure is:

Older units with basic motor cooling - 5 psid
New units with refrigerant pumps - 3 psid

Refrigerant pump motor cooling units do not have or need the vent line solenoid.

The UCP-2 units have evaporator and condenser limits that may cause the chillers to run unloaded. If the chiller is in a big central plant where the elevated water out of one chiller is not noticed. You could lose oil because of the light load to a point that you may have to put oil back in the chiller to get it on line.

A couple of the guys in the class indicated they had units that developed leaks on the supply and return lines on the purge. It could be caused by maintenance stepping on the lines while cleaning or by vibration.

A few drops of compressor oil needs to be put on the o-rings on the oil block rotating valve. You will need to remove the small pipe plug at the valve to do this. Replace the plug. (CVHE-OM-8B pg. 79)

Trane has current tests to replace o-rings with new seal technology. This is loctite - 515 instead of o-rings. (Note small comment in CVHE-OM-8B pg. 78)

Trane service support recommends test running stepper motor during stop inspection and putting a few drops of compressor oil on the shaft and coating it. This reduces rust and internal damage. (Minor note CVHE-OM-8B pg. 77)

There were three designs of purges:

PRG-A purge with filter in cooling coil
PRG-B purge with regular canister style drier
PRG-C purge with replaceable one time drier with an o-ring

There are different charcoal replacement schedules for this based on the purge. See pg. 52 of the PRG-OM-6A. The normal purge rate seems to be about 3 minutes in a 24-hour period. Default setting in the micro is 20 minutes in a 24-hour period. If it purges that often, you probably have a leak.

Enhanced oil protection program on the UCP-2 must be enabled to run on units with refrigerant pump Just in case the refrigerant pump seal leaks refrigerant into the oil sump. Minimum oil sump temperature is evaporator saturation temperature +30°F or 100°F whichever is higher.

As most of you know, the UCP-2 can dry run the starter. But, remember to turn off 3 phase incoming power. You may need to supply 120V control from another source to do this.

Service Alert - Cutler Hammer size 4 and 5 contactor could stick closed. Trane offices are checking out units in their area. The contactors are called Cutler Hammer "Freedom Contactor".

CVHE/CVHF in very humid areas have had terminal condensation issues. Some of the units have had heaters installed in the terminal box cover to address this. This is another advantage of the refrigerant pump system - motor temperature runs higher than the old motor cooling system. (CVHE-OM-8B pg. 79)

New recommended net oil pressure for CVHE/CVHF is 18 to 22 psid. Low oil pressure cutout should be set for 12 psid. (CVHE-OM-8B pg. 30)

If keypad is locked for no access, the auto stop and panic stop on the UCP-2 is also locked out! To unlock the keypad, push previous and enter at the same time.

If you have a unit that has higher motor sensor reading and you would like to try and cool them down a little quicker for restart, try running the oil pump for 2 or 3 minutes.

The solid-state starters may not have any lower inrush than the normal Star-Delta starter. Don't tell a customer that as a sales tool, it may be wrong.

Some of the older and even some of the new Trane Purifiers had an issue with the TXV getting hung up. Ths caused excessive pump out due to low suction sensor temp. The older units had the TXV mounted upside down. The newer units were CVHE's 4 to 6 years old.

12% to 15% of the centrifugals leaving the Trane plant have frequency drives.